A LIGHTWEIGHT SUPERCONDUCTING MAGNET FOR A TEST FACILITY OF MAGNETIC SUSPENSION FOR VEHICLES

K.Hirai, S.Akiyama, H.Fujino and K.Onodera
Central Research Laboratory, Fuji Electric Co., Ltd.
Japan

Abstract

For the magnetically suspended high speed train a light weight superconducting magnet is required. As one of the preliminary studies we have constructed such a light weight magnet for a magnetic suspension test facility and have performed magnetic suspension experiments. The design concept of the cryostat has been based on a tubular structure, but modified partially for the requirement of the facility. The cryostat includes a pair of C-shaped modified race-track coils with thermally operated persistent switches. Supports to carry the lift forces induced on the coils are composed of FRP tubes with hinge connectors. The conductor of coils is the twisted multifilamentary superconducting composite.

The main features of this magnet are

Configuration: A pair of C-shaped coils
Conductor: 1.8 x 3.2 mm^2 Nb-Ti copper composites having 161 filaments of 80μ diameter (twisted)
Current and Ampere turns: 855 A and 200 kAT
Cryostat dimensions: 1540 mm in o.d.
260 mm in i.d.
560 mm in height
Weight: conductor 29.5 kg,
coil and cryostat 650 kg
Field : maximum 2.3 T, center 0.7 T
Stored energy: 4.5 x 10^4 J

The magnet worked very stably in the externally excited mode and the persistent mode. The maximum levitating height was 80mm.

I. Introduction

Since several years ago, magnetically suspended trains have been proposed for high speed passenger trains by many investigators. The Japanese National Railways is developing the superconducting magnetic suspension system driven by linear motors for the train with the average running speed of 450km/h. In this system the superconducting magnets have to be designed under the aspect of high safety, small size and low weight.

Several possible magnet structures have been proposed by Powell and Danby[1], and others. We think, however, that the pipe structure which Powell and Danby have proposed is better one. As to structural materials, the stainless steel which is used for conventional magnets should be replaced by aluminium or titanium to reduce the weight of the magnets.

We have constructed the magnet for a test facility of magnetic suspension. This magnet has been designed considering to reduce the weight of the cryostat by applying the concept of tubular structure and multifilamentary superconducting composites as the conductor. However, as this magnet has required the special arrangement of superconducting coils, the design of the cryostat has been modified partially. The cryostat is ring-shaped and its cross section is arch-shaped, and a pair of C-shaped modified race track coils are installed in it. The magnet is designed to be operated in the persistent mode.

The experiments was performed by using the facility of the Railway Technical Research Institute of JNR.

II. Superconducting coils

Usually the large superconducting coils are completely stabilized with the large quantity of copper. The overall current densities of completely stabilized coils are relatively small. Therefore, the weight of conductor is one of factors increasing the weight of magnet.

To increase the stability of conductor and reduce the weight of it, we have taken account of the criteria of the intrinsic stabilization by multifilament composite wires and of minimum propagation current.

Conductor

The conductor consists of 161 filaments of 80μ diameter Nb-Ti alloy embedded in OFHC copper matrix, and is coated with polyvinylformal so that the thickness of film is 20μ thick. The copper ratio of the conductor is 6.3, and the stable current is about 10% larger than the nominal current 855A.

The diameter of a superconducting filament has been determined from the criterion[2] for the adiabatic stabilization. The insulation thickness has been determined to make the heat transfer coefficient greater than 0.1W/cm^{2}K.

The superconducting wires were produced by the Furukawa Electric Co., Ltd.

Figure 1 and Table 1 show the cross section and the specifications of the conductor.

Table 1. Specifications of the conductor

Cross section	1.8 mm x 3.2 mm
Superconducting filament	80 μ diameter Nb-Ti
Number of filaments	161
Twist pitch	100 mm
Copper ratio	6.3
Residual resistance ratio of OFHC	140
Critical current	1780-1910 A at 3 T 990 A at 5 T
Insulation	PVF 20 μ thick
Unit length	700 m

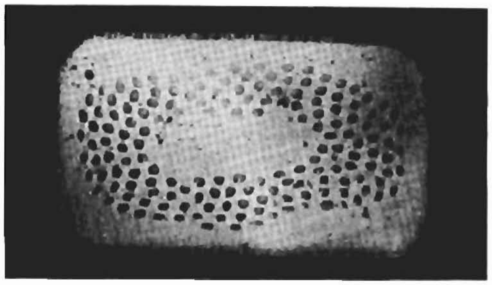

Fig. 1. Cross section of the superconducting composite

Coil structure

The coils have been wound solenoidally, and each layer of windings is separated by the insulated pieces of 1.5mm thickness and of 4mm width, which are placed at 30mm intervals along the conductor, so as to make the coolant channel vertical. The heat transfer of the liquid helium-conductor interface may be influenced by the design of cooling channels, and the vertical coolant channels is expected to make the performance of the heat transfer better.

The coils have been wound as rigidly as possible on the stainless frames with reinforcing ribs, and have been tightened with the circular frames and the end sustaining arch-shaped frames from the outside. The spacers of the insulated copper have been fastened on the conductors by the cryogenic adhesive, so as not to displace.

The coils structure is shown in Fig.2 and Fig.3, and the specification in Table 2.

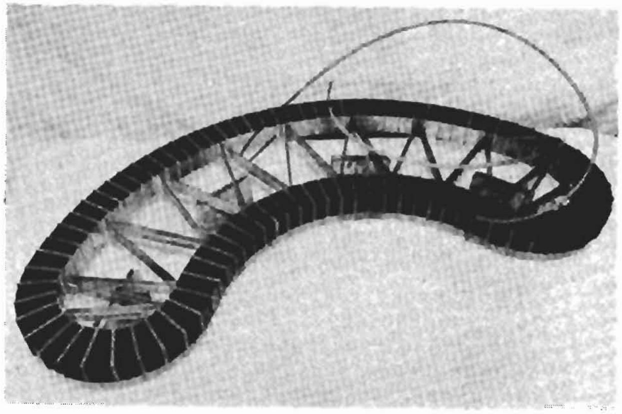

Fig. 2. Superconducting coil

Table 2. Specifications of the Coil

Ampere turns	200 kAT
Nominal current	855 A
Number of layers	18
Number of turns in a layer	13
Cross section	58 mm x 43 mm
Maximum field strength	2.3 T
Center field strength	0.7 T
Weight of conductors	29.5 kg

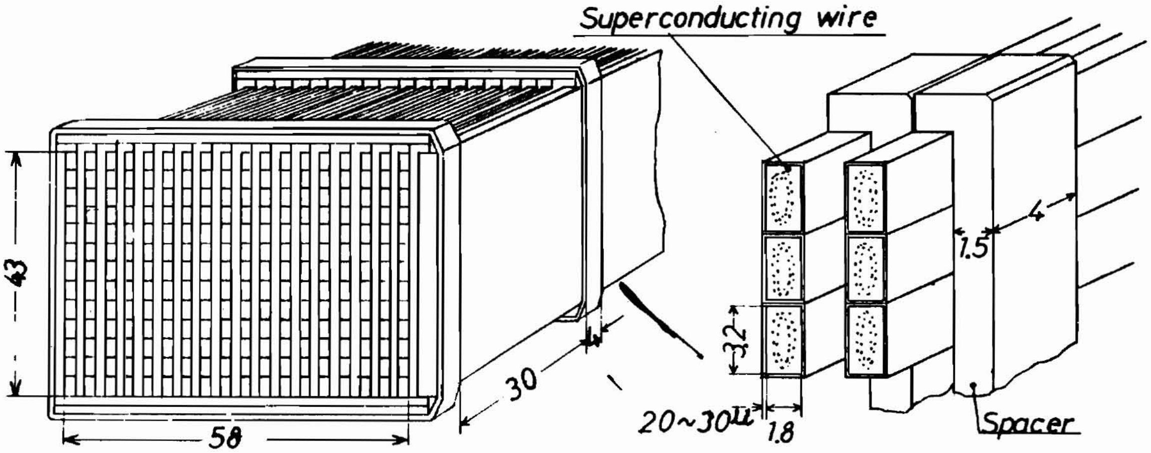

Fig. 3. Sketch of the cross section of the superconducting coil

Stability test of coil

The stability has been tested by a model coil which has the same cross section with that of the levitating magnet. Figure 4 shows the predicted stable region (under the solid line) and the observed values (circles denote stable and crosses unstable).

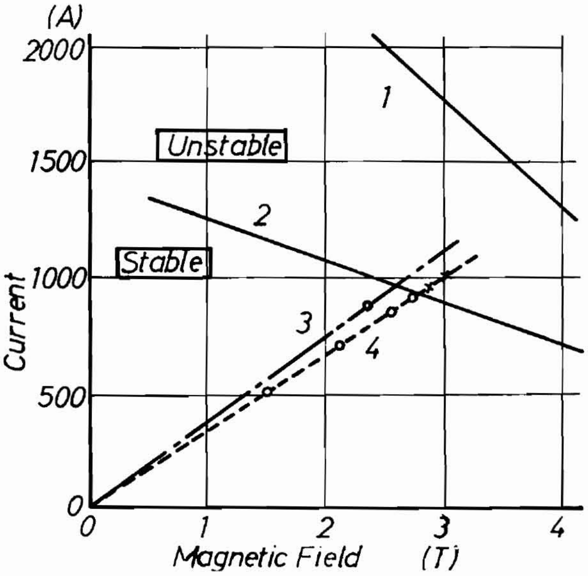

Fig. 4. Minimum propagation current and load lines of the superconducting magnet for levitation and the model magnet
(1) Critical current
(2) Minimum propagation current
(3) Load line of the magnet for levitation
(4) Load line of the model magnet

Thermally operated persistent switch

Two thermally operated superconducting switches have been provided so that the magnet can be operated in the persistent mode. They have been located between the coil ends of two coils so as not to be influenced by magnetic field of coils. The switches have consisted of the bundles of superconducting filaments and the heaters, and have been assembled in the case with the 60mm outer diameter and the 41mm height. The resistance at the normal state is 60 ~ 70mΩ at 4.2K. Figure 5 shows the persistent switches.

The response of the persistent switches has been so quick as to work within few seconds after switching off heater. The decay of the persistent current has been too slow to be detected in about one hour. The evaporation rate of liquid helium due to the heater of a persistent switch is about 5 liters/h, but the quantity of liquid helium evaporated by the heater over a operating cycle of the magnet is less than one liter per switch because the working period of the heater has been about 9 minutes which is the period to excite the magnet.

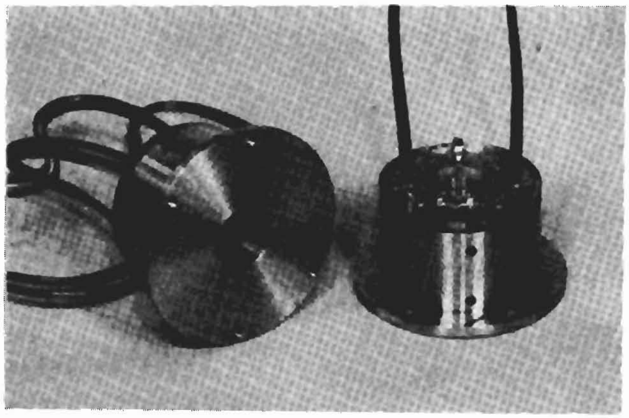

Fig.5. Thermally operated persistent switch

III. 'Cryostat

General

The superconducting magnet for the high speed train is required to be light in weight, short in height and small in the consumption of liquid helium. Considering these requirements, we have designed conceptually the cryostat to be installed on the high speed train, as shown in Fig.6. The features of this cryostat are as follows:

a) By adopting the tubular structure, the thickness of the wall of cryostat is reduced as compared with the cylindrical or rectangular structure, and the reduction of the weight is expected.
b) The inner vessel is placed eccentrically against the outer vessel and the superconducting coil is located on the lower part of the inner vessel to increase the field at the level of lifting coils and the lift force.

Structure of the cryostat

The magnet has been designed on the basis of the above concept. However, some modifications of design were necessary to apply the magnet to the experimental facility. Figure 7 shows the cross section of the cryostat and the coil arrangement in it and Table 3 gives the specifications of the cryostat. The cross section of the outer vessel has the semicircular upper part and the rectangular lower part to reduce the distance between the superconducting coils and the lifting coils. The cross section of the inner vessel is rectangular. The outer vessel is made of 1.6mm thick stainless steel plate, and the inner vessel is made of 2.0mm thick plate. The radiation shield is located between the inner and outer vessels, and made of 0.8mm thick copper plate with the exception of the bottom plate and cooled by liquid nitrogen flowing in the copper tubes soldered on the shield. The bottom plate is made of 3.2mm thick aluminium plate to shield the alternating field from the lifting coils.

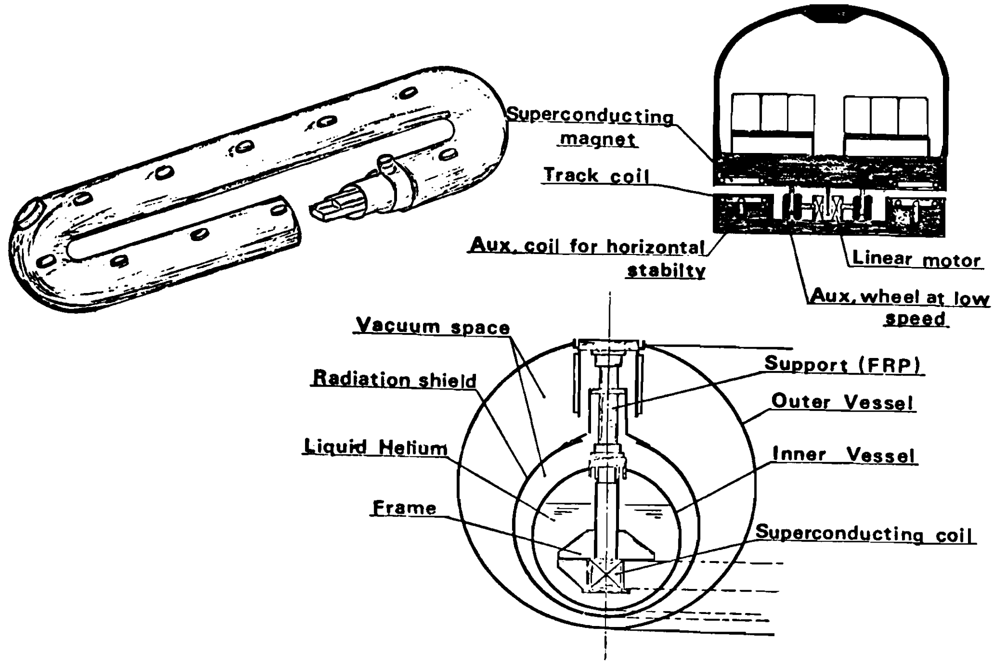

Fig.6. Conceptual design of the magnet for high speed trains

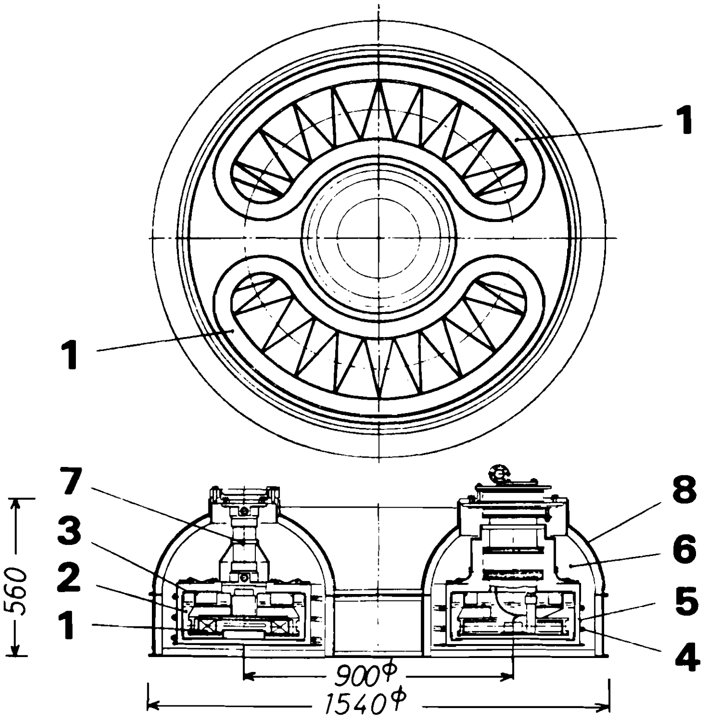

No.	Names
1	*Superconducting Coil*
2	*Liquid Helium*
3	*Inner Vessel*
4	*Liquid Nitrogen*
5	*Radiation Shield*
6	*Vacuum Space*
7	*Support*
8	*Outer Vessel*

Fig.7. Cross section of the superconducting magnet

Table 3. Specifications of the cryostat

Outer diameter	1540 mm
Diameter of bore	260 mm
Height	560 mm
Weight (coils and cryostat)	650 kg
Liquid helium	140 liters

Tower of bellows structure

The cryostat has two towers with the lid. The tower wall introduces heat from the outer vessel to the inner vessel. Excepting the heat inleak through the power leads, a major portion of the heat inleaks into the cryostat depends on the tower wall. The bellows has the thin wall and prolongs the heat conduction path, and so we have adopted the bellows structure as the tower to reduce the heat inleak. Furthermore,to improve the reduction of the heat inleak, the bellows has attached a heat sink controlled at the nitrogen point.

The rubber O-ring has been used for the vacuum seal in the tower. The sealing part has been designed so as to be maintained at the room temperature by separating thermally the flange for O-ring from the flanges for ports, through which cold gas flows, by the steel bellows.

Supports of lift force

Superconducting coils and the inner vessel must carry the magnetic force caused by the interaction between the magnet and lifting coils. The FRP tubes have been used for supports because of the large ratio of the mechanical strength to the thermal conductivity. The supports have hinge structures at the both ends to prevent the stress caused by the thermal contraction.

Figure 8 shows the supports with hinge structures.

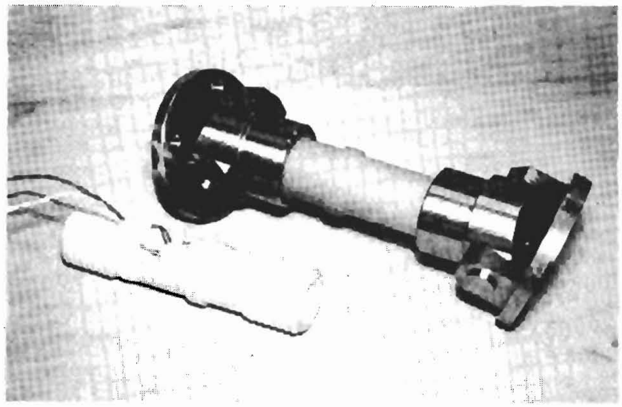

Fig.8. Support of FRP

IV. Magnet performance

Excitation and persistent mode operation

The exciting circuit is shown in Fig. 9. The diode in the circuit has a role to protect the coils and the persistent switches. Even if the current supply is accidentally interrupted, the terminal voltage of coils is limited to the forward blocking voltage of diode and then the coil current is prevented to change rapidly. At the same time it is prevented for the excessive current to flow into the persistent switches in the resistive state.

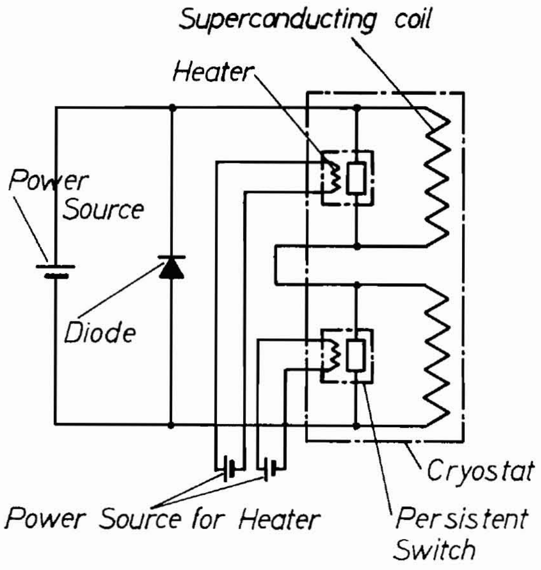

Fig.9. Exciting circuit for the superconducting magnet

The maximum excitation current experienced was 875A (2.35T) which was about 90% of the minimum propagation current 960A. During the excitation, the flux jumps were not observed in the records of the terminal voltages of the superconducting coils and the search coils beneath the superconducting coils. Even when the current supply was interrupted at 855A, the coils did not quench but discharged in about one minute.

A typical process of the persistent mode operation is as follows:

a) exciting the coils up to 855A by the current supply at the rate of 100A/min.

b) switching off the heaters of the persistent switches to make the switch conductors superconductive.

c) reducing the supplied current with the rate of 100A/min from 855A to 450A, 40A/min from 450A to 200A and 20A/min from 200A to 0A.

In the process to reduce current we chose three steps of the rate to protect the switches from the destruction of switch conductors caused by excessive current change, because the switch conductor was not stabilized with the copper substrate. It needed about 30 minutes to complete the process. The excess helium loss due to the persistent switches in the excitation process was about 0.8 liters per switch.

The above process is reversed for the deexcitation. When the persistent mode was switched off, the discrepancy between the supplying current and the persistent current was allowed up to 6A without any trouble.

When the magnet was levitated, the coil current in the persistent mode might increase so as to maintain the total magnetic flux constant against the reaction field from the lifting coils. We observed the current increase of 1-2% for the total current of coils.

Magnetic suspension test

The test facility is shown in Fig.10. The magnet is suspended over the six lifting coils on the rotating disk and free to displace vertically. The rotation of the magnet is persisted by the stoppers on which the load cells are installed to measure the drag forces. The lifting coils are fastened on the rotatable disk with the revolution velocity up to 600rpm which corresponds to the linear velocity of 100km/h of the lifting coils. Figure 11 shows a test scene.

The magnet was levitated to the height of 80mm at the lifting coils velocity 100km/h and the superconducting coil current 800A in the persistent mode. An example of the test data is shown in Fig.12 where the solid lines are the predicted values and the broken lines are the observed results.

The ac component of the reaction field from the lifting coils was detected by the search coils installed beneath the superconducting coils. The amplitude and the frequency of the ac component were respectively 50 gauss at most and 60 Hz. Any trouble by such a reaction field was not observed as to the superconducting coils. The increment of the evaporation rate of helium was about 25-37 liters/h, most of which could be evaluated as the joule loss (20 liters/h) caused by the eddy current in the copper substrate.

Evaporation rate of helium

The vacuum space of the cryostat has been evacuated by the 1200 liters/sec diffusion pump and maintained at a pressure of 3 x 10^{-7} Torr. The radiation shield was supplied the liquid nitrogen at the rate 26 liters/h. The evaporation rate was measured by the float type gas flowmeter and the helium level gauge[3] which consisted of a superconducting wire. Figure 13 shows the principle of the level gauge. The mean value of the rate was 15 liters/h in the persistent mode.

The major portion of the heat inleak may be carried through two pairs of short power leads.

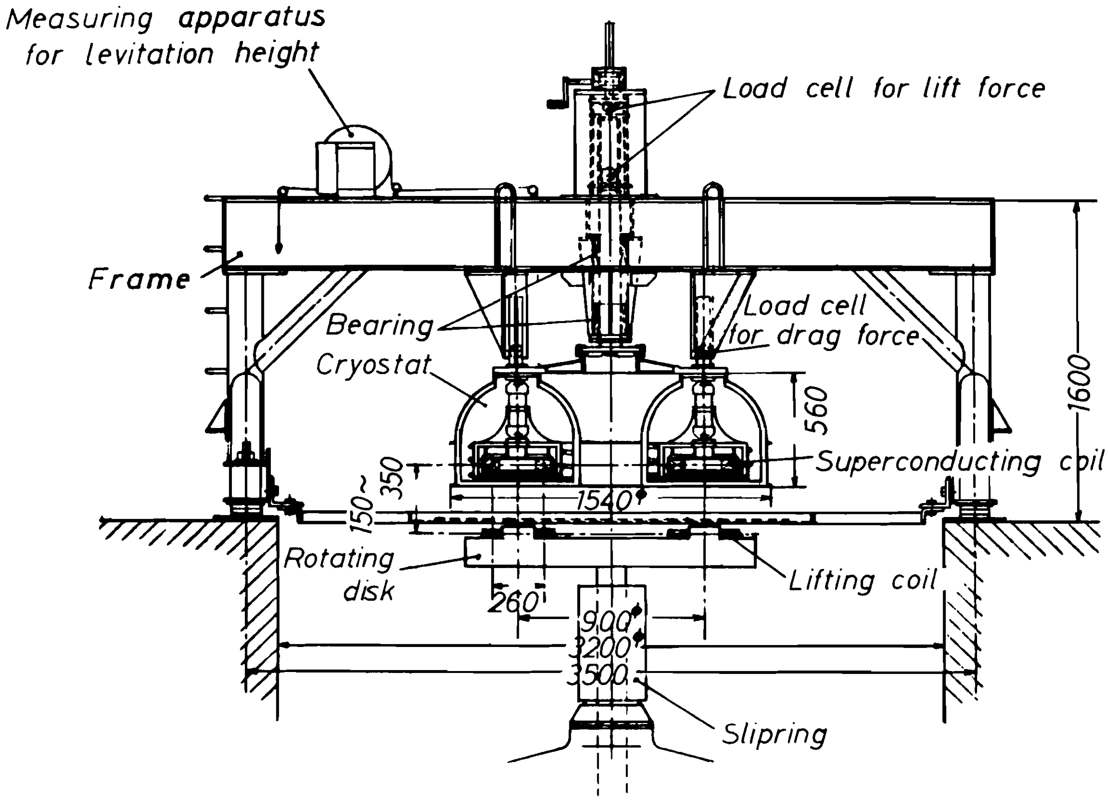

Fig.10. Test facility of magnetic suspension

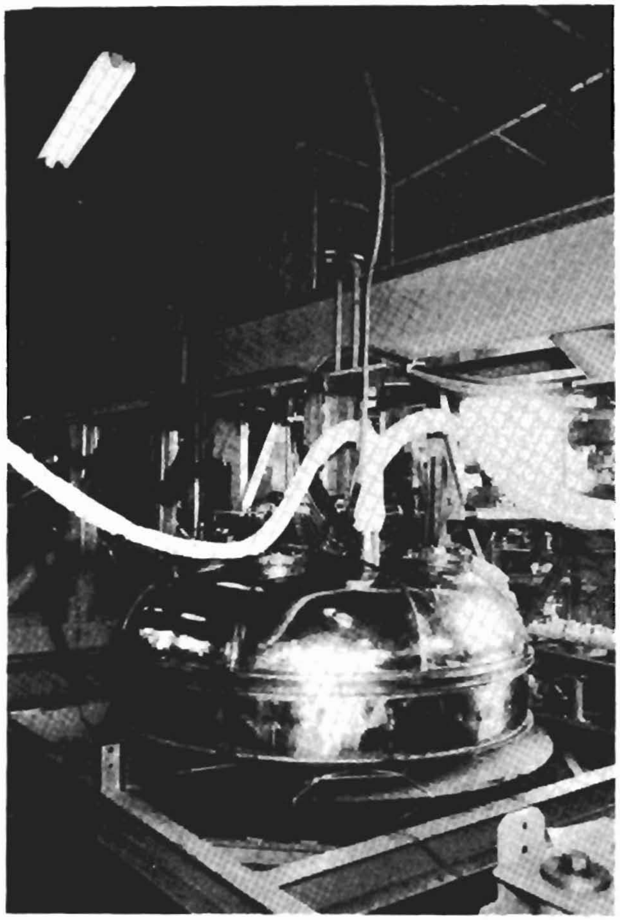

Fig.11. Scene of the magnetic suspension test

Although the heat inleaks through various parts could not be measured separately, calculated values are listed in Table 4. The application of the FRP tube for the supports and the bellows structure for towers might be able to reduce the evaporation rate of helium by 5 or 7 liters/h.

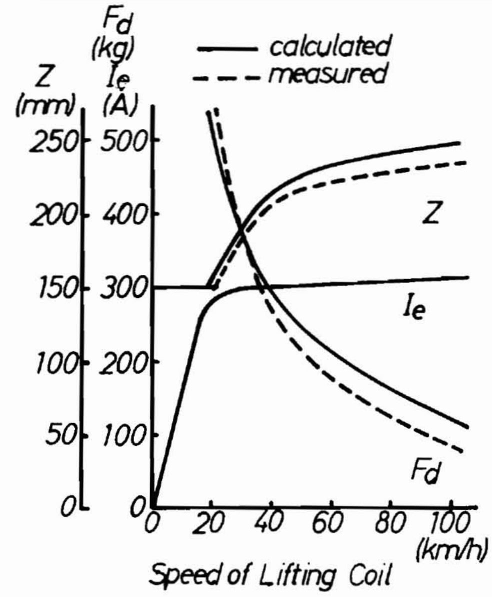

Fig.12. Levitation height, current of the lifting coil and drag force versus speed of the lifting coil

Z : Levitation height
Fd : Drag force
I_e : Lifting coil current

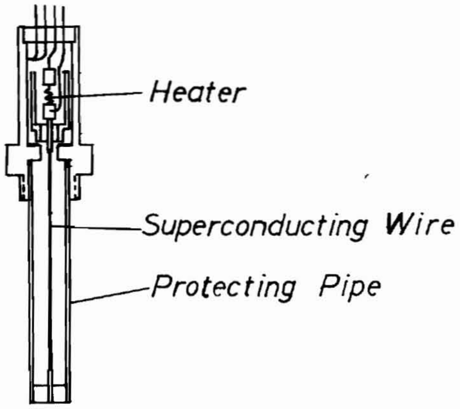

Fig.13. Schematic structure of liquid helium level gauge

Table 4. Calculated heat inleaks in the cryostat except two power leads

Parts	Materials	Temperature difference	Heat inleaks (kcal/h)	Helium loss (liter/h)
4 supporting columns	FRP	80 to 4.2K	1.03	1.66
3 supports for radiation shields	FRP	80 to 4.2K	4.48×10^{-2}	0.072
2 towers	SUS	81 to 4.2K	5.02×10^{-2}	0.081
Leads for measurement	Cu	300 to 4.2K	0.277	0.447
Helium gas in the towers	He	300 to 4.2K	0.491	0.79
Thermal insulation plugs	urethanform	300 to 4.2K	0.603	0.97
Guide for helium transfer	teflon	300 to 4.2K	0.107	0.172
Radiation	vacuum	80 to 4.2K	3.21×10^{-2}	0.052
Vacuum space	rarefied gas	80 to 4.2K	8.5×10^{-2}	0.137
Total			2.98	4.38

V. Conclusion

The magnet which we have built on the basis of the design concept of pipe structure has been able to reduce the wall thickness of the cryostat, and has been useful to reduce weight and size. The magnet to be installed on the train as the extension of this design is able to make its cross sectional configuration simple as shown in Fig.6, and we can design the magnet more effectively than this magnet.

The multifilamentary superconducting composite used to this magnet has shown the very stable performance, and this composite is useful to reduce the weight of conductor.

The thermally operated persistent switch has worked satisfactorily in this experiment, and so this is usable to operate the magnet for the high speed train without heavy power sources.

It has been confirmed that the superconducting magnet is applicable to the high speed train from our experience of this time.

Acknowledgment

The authors wish to thank the Railway Technical Research Institute of JNR for the examination of the magnet, Mr.Y.Kyotani, Japanese National Railways, and Prof.K.Yasukochi, Nippon University, for the valuable advice and the encouragement, and Mr.Y.Ishizaki, Tokyo University, for the recommendation of insulated metal spacers. Acknowledgments for the permission to publish the paper are due to Mr.R.Ueda, Managing Director, Fuji Electric Company Limited.

References

1. J.R.Powell and G.T.Danby, Cryo. Ind. Gases, 19, (Oct. 1969).
2. M.N. Wilson et al.J. Phys. D, 3, 1517 (1970).
3. M.Ishizuka and K.Yasukochi, Cryo. Eng. (Japan), 3, 131 (1968).