New Low-Cost Approaches to High Energy Hadron Colliders at Fermilab

Mini-Symposium

APS Annual Meeting, Indianapolis, May 2-5, 1996

Organizers: Ernest Malamud and G. William Foster

TABLE OF CONTENTS

SESSION E12, Friday, May 3, 1996, 8-10:30 a.m.
Chair: Gerry Jackson

I. Brief Historical Introduction and Goals for the Symposium, Ernest Malamud, *Fermilab*

II. Overview of Parameters for a Large Hadron Collider, W. A. Barletta, *LBNL*

III. Parameters and Layout of a Low Field Large Hadron Collider, Steve Holmes, *Fermilab*

IV. Superferric Magnets and Prototype Work at Fermilab, G. William Foster, *Fermilab*

V. A 100 TeV Synchrotron/Collider Based on the Nuclotron-type Cryomagnetic System, A. Baldin and A. Kovalenko, *Laboratory of High Energies, JINR, Dubna*

VI. Cryogenics Baseline Parameters, Peter Mazur, *Fermilab*

VII. Challenges and Opportunities for the use of High Temperature Superconductors for Particle Accelerators, David Larbalestier, *University of Wisconsin*

VIII. Geology in the Fermilab Region, David. L. Gross, *Illinois State Geological Survey*

SESSION F12, Friday, May 3, 1996, 11 a.m. - 1:30 p.m.
Chair: G. William Foster

I. Microtunneling and Horizontal Directional Drilling, Tom Iseley, COB, *North American Society for Trenchless Technology*

II. Quench Protection, Karl Koepke, *Fermilab*

III. Design Concepts for Remote Installation and Repair, Mike May, *Fermilab*

IV. Synchrotron Radiation in a Large, Warm-bore Collider, William Turner, *LBNL*

V. Low Cost Warm Bore Vacuum Chamber Options, Hajime Ishimaru, *National Laboratory for High Energy Physics, KEK, Japan*

VI. Comment on Non-perturbative Solutions in the Standard Model, A. Baldin, *Laboratory of High Energies, JINR, Dubna*

VII. Accelerator Physics in a Large Superferric Collider, Gerry Jackson, *Fermilab*

VIII. Outline of Topics to Work on at Snowmass, Ernest Malamud, *Fermilab*

Brief Historical Introduction and Goals for the Symposium

by
Ernest Malamud

Fermilab

New Low-Cost Approaches

to

High Energy Hadron Colliders at Fermilab

NEW! Project Information

Schedule of Meetings
Record of previous meetings

Mini-Symposium

APS Annual Meeting, Indianapolis, May 2-5, 1996
Organizers: Ernest Malamud and G. William Foster

New approaches are required to continue the dramatic rise in collider energies as represented by the well-known Livingston plot. The old idea of low-cost low-field iron dominated superconducting magnets in a small diameter pipe may become feasible in the next decade with dramatic recent advances in technology. These include advanced tunneling technologies for small diameter, non human accessible tunnels, high Tc superconductors which operate at liquid nitrogen temperatures, advances in robotics and remote manipulation, accurate remote guidance systems for tunnel survey (e.g. inertial guidance), digitally multiplexed electronics, and techniques for the achievement of high luminosities in proton-antiproton and proton-proton colliders.

A leading concept for the low-field magnet is a long "double-C" iron structure driven by a superconducting transmission line. A prototype is under developement at Fermilab.

In this symposium the design concept and the potential strong tie-in with industrial developments will be discussed

The Pipetron Concept

Two major components:

A very large experimental hall on the Fermilab site

A non-human accessible tunnel
roughly circular, deep underground
as <u>few</u> shafts as possible

This concept of building an accelerator in a sewer pipe was clearly presented by

Fermilab's Founding Director, R. R. Wilson
at a conference in Snowmass, Colorado in 1982.

"Whether the next large proton accelerator (20 TeV ?) is built on a national basis or as an international effort, to be affordable, innovations in construction must be made. The design of a superferric magnet ring buried in a pipe in the ground is explored here to see what reductions in cost might result."

"...superferric magnets (an old idea) have the advantage of simplicity, of being more sparing in the use of superconductor, less sensitive to the position of the superconductor, easier to construct, and perhaps more reliable to use."

R. R. Wilson, Snowmass 1982

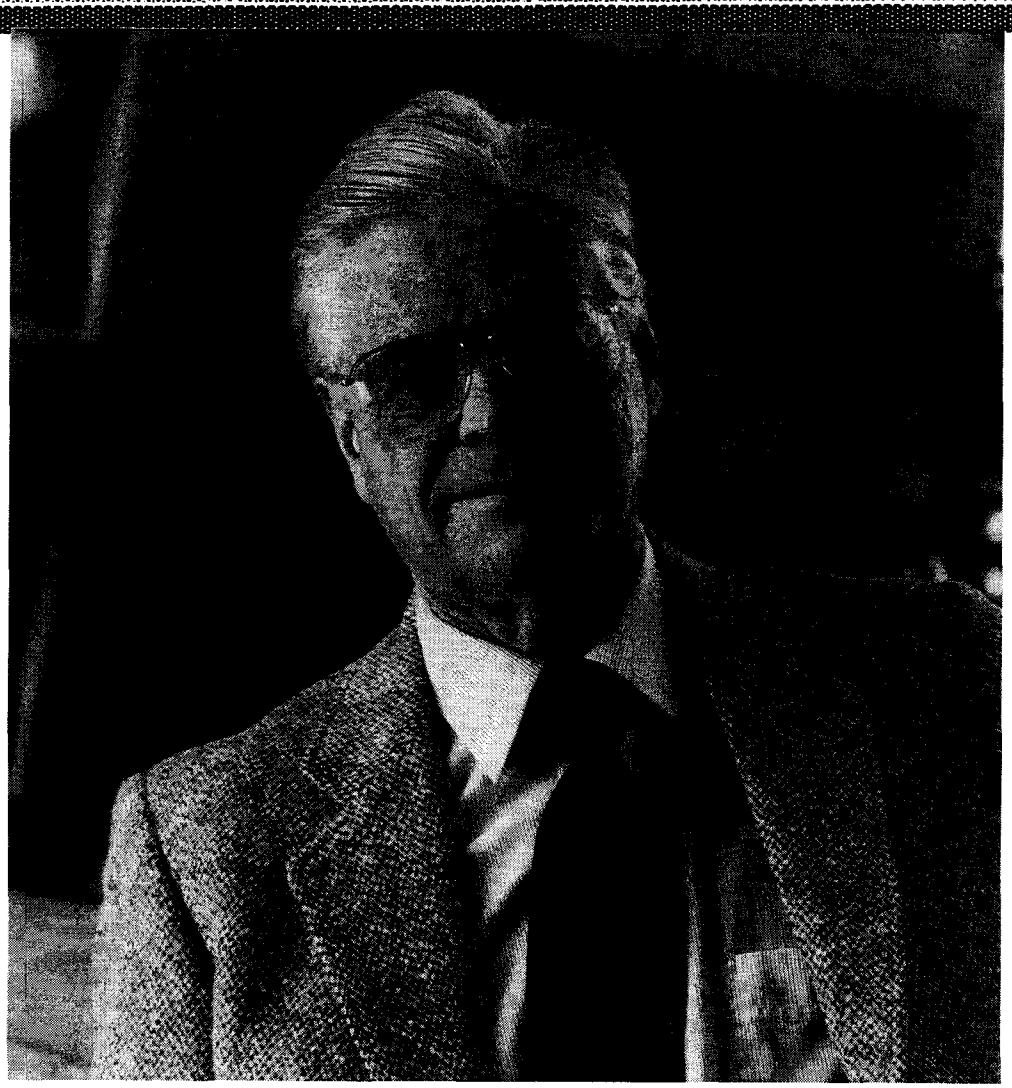

Proceedings Of The 1982 DPF Summer Study On Elementary Particle Physics And Future Facilities

June 28–July 16, 1982
Snowmass, Colorado

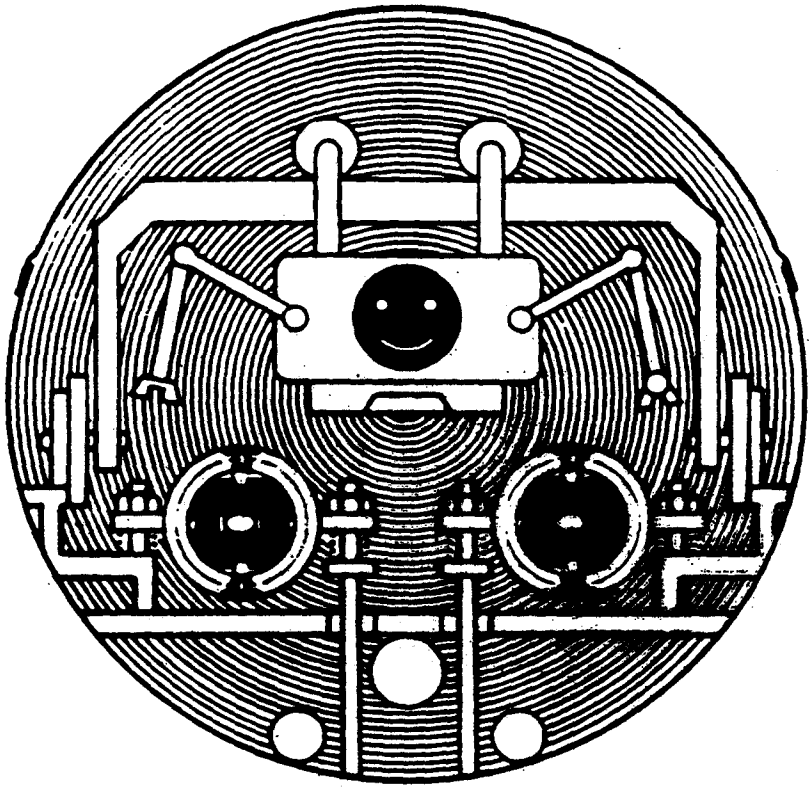

Editors
Rene Donaldson • Richard Gustafson • Frank Paige

Organized by the Division of Particles and Fields
of the American Physical Society

Sponsored jointly by the United States Department of Energy
and the National Science Foundation

The necessary technologies did not exist at that time but have emerged since then and are developing rapidly.

- advanced tunneling technologies

  microtunneling

  horizontal directional drilling

- high temperature superconductors running at liquid nitrogen or liquid hydrogen temperatures

- accurate remote systems for tunnel survey: inertial guidance; laser interferometers

- digitally multiplexed high speed electronics for control and monitoring

- robotics for remote repair of pipes

New Low-Cost Approaches to High Energy Colliders at Fermilab

What is required to "recapture" the Energy Frontier?

Necessary conditions for the next large accelerator project

- be different than existing accelerator projects, not just a "brute force" extrapolation of an existing lower energy machine

- be relatively low cost -- the important measure is

  $/TeV

- real benefits to society

Circular machines are in series. Each machine is the injector into the next higher energy ring. The conclusion is to site the machine at an existing laboratory, and not throw away what is a 3-4 billion dollar investment.

Overview of Parameters for a Large Hadron Collider

by
W. A. Barletta

Lawrence Berkeley National Lab

EXPLORING THE OUTER EDGES OF THE HIGH ENERGY FRONTIER

William A. Barletta

APS Mini-Symposium
May 3, 1996

Characteristics of an Ultimate Hadron Collider with similar discovery potential

	Pipetron	Ultimate ELN
Center of mass energy	200 TeV	1 PeV
Circumference (km)	1160	1015
B_{dipole} (T)	2	13.5
Beam energy (TeV)	100	500
Beam current (mA)	500	2
Number of bunches	2×10^5	23000
Mains power (MW)	54	220
$\langle P_{sync} \rangle$ (W/m)	2	10
Interaction regions (IR)	2	2
Interactions/crossing/cm	13	< 1
Hadronic debris/side (kW)	170	10
Limiting technologies	IR survival	Management
Tune shift per IR	0.007	0.008
β^* (m)	1.5	2
Stored energy (GJ)	193	4.4
Luminosity ($cm^{-2}\ s^{-1}$)	$\approx 10^{35}$	10^{33}

Characteristics of an high field and low field options

	Pipetron	ELN
Center of mass energy	200 TeV	200 TeV
Circumference (km)	1160	274
B_{dipole} (T)	2	13.5
Beam energy (TeV)	100	100
Beam current (mA)	500	230
Number of bunches	2×10^5	46000
Mains power (MW)	82	120 @ 60°
$\langle P_{sync} \rangle$ (W/m)	2	20
Interaction regions (IR)	2	2
Interactions/crossing/cm	13	12
Hadronic debris/side (kW)	170	120
Limiting technologies	IR survival	IR survival
Tune shift per IR	0.007	0.01
ß* (m)	1.5	1.0
Stored energy (GJ)	193	22
Luminosity (cm^{-2} s^{-1})	$\approx 10^{35}$	$\approx 10^{35}$

	A	B	C	D	E	F	G
2		**Ring charcteristics**				**Interaction points**	
3	*	*Max Energy (TeV)*	*100*		*	*Number of IPs*	*2*
4	*	*B dipole - max (T)*	*2*		*	*Crossing angle (mr)*	*0.2*
5	*	*Dipole fraction*	*0.9*		*	*L* - long range (m)*	*200*
6		To - rev time (s)	3.88E-03			l* - (m)	82.2
7		Circum (km)	**1163.55**			Beta* (m)	1.50
8						Beta max (km)	27.0
9		**Beam characteristics**				Σ-IP (μm)	3.8
10	*	*Energy (TeV)*	*100*			2Σ-Q1 (cm) - flag	0.50
11	*	*Norm emit@E(π mm-mrad)*	*1.00*			Δnu-HO / IP	7.1E-03
12	*	*Bunch space buckets*	*8*			Δnu-LR	2.9E-04
13		gamma	1.1E+05			Δnu-tot	**0.015**
14		Bunch space (m)	6.00			Δt crossing (ns)	**20.0**
15		Number of bunches	**1.9E+05**			95% Lum. region (cm)	22.1
16	*	*NBunch (nC) < 0 for input*	*0.0*			Interact / crossing	**274.8**
17		Bunch population	**6.0E+10**			T-lum/t-damp-perp	3.5
18		Current (A)	**0.50**			Lumin. half-life (hr)	**81.8**
19						Luminosity / IP	**9.9E+34**
20		**Injection / Energetics**					
21	*	*Injection Energy (TeV)*	*10*			**Instabilities**	
22		Fill time (hr)	**4.0**		*	*R-pipe (cm)*	*2.5*
23		Stored Energy (GJ)	**193.12**		*	*Operating temp (°K)*	*200*
24		D(E,Q1) MGy/yr	**6.5**		*	*Injection temp (°K)*	*20*
25		Hadrons in Q1 (W/kg)	0.7			Resistive wall -turns	0
26		Debris (kW per side)	**172.9**			RW at injection - turns	**1**
27						μwave Z/n @ inj (ohms)	**21.4**
28		**Synchrotron radiation**					
29	*	*Max P(W/m) on walls*	*2*			**Vacuum**	
30		Uo (GeV/turn)	4.7E-03		*	*Op. pressure (nTorr)*	*2*
31		E- Damping time (s)	8.3E+04		*	*Desorb coeff.*	*0.001*
32		Power (W)	2.3E+06			E-crit (eV)	2.1E+03
33		Power density (W/m)	**2.0**			N-gamma (s-1 m-1)	1.9E+16
34						Req. pumping (L/s/m)	**192.8**
35		**Parasitic heating**					
36		Resitive wall (kW/beam)	2736.2			**RF systems/longitudinal**	
37		RF-HOMs (kW/beam)	7.9		*	*rf -Frequency (Mhz)*	*400*
38		P to Compressors (MW)	**82.2**		*	V-eln/V-ssc	8
39						Harmonic number	465421
40		**Lattice**				Σ-z (cm)	**7.9**
41		<Beta> (m)	491.9			Synch. tune	3.20E-03
42		Dispersion (m)	1.5			Mom. compaction	6.1E-06
43						N cavities/ring	27
44		*Rev 20.11.92; Σ's = Gaussian widths*				P-max to klystron (MW)	**100.6**

A Possible Scenario

Fermilab's Tevatron is the injector into a proton-proton collider

---

Build a 12 TeV/beam Collider

Vigorous ten year R&D program to solve the many challenges

magnet
tunneling
fabrication
installation etc.

Circumference = 136 km

Depth depends on regional geology
--part on-site would be ~ 20 meters underground

Begin construction in 2005 or 2006
use for physics
serves as injector to the next ring

Define a path to 100 TeV/beam

Circumference = 1110 km

100 m underground --

regional geology may require it to be a "terrain follower" i.e. it is not in a plane

Begin construction 2015

This is 5 x the energy of the SSC project

New approaches are required to continue the dramatic rise in collider energies as represented by the Livingston plot

Necessary conditions for the next large accelerator project

- looks very different than existing projects, i.e. not just a brute force extrapolation to something bigger
- relatively low cost
- real benefits to society

Schedule of Meetings
Low cost High Energy Hadron Collider at Fermilab

Wednesdays 9:30 - 10:30
TSS Hdqtrs Conference Room (unless otherwise noted)

---

web page: http://www-ap.fnal.gov/PIPE/

The construction challenge

Fermilab has joined the
North American Society for Trenchless Technology

We will explore partnerships with industry to work on innovative ways for

- longer distances between shafts
- "umbrella" machines
- remote cutter changing
- remote liner installation
- muck removal strategies
- guidance
- terrain following

The operations challenge

- Learn a new way of working
- Increased emphasis on reliability

Gaining public support is part of the challenge

- **explore shared use of the tunnel for infrastructure**
- **technology can have real benefits to society**
- **developing such capabilities will open new markets**

Parameters and Layout of a Low Field Large Hadron Collider

by
Steve Holmes

Fermilab

PARAMETERS AND LAYOUT OF A LOW FIELD LARGE HADRON COLLIDER

S.D. Holmes
(W. Chou, D. Neuffer)
Fermi National Accelerator Lab

May 1996

Outline

1. Performance Goals and Choices
2. Parameters
3. Issues

PERFORMANCE GOALS

Energy

The next large hadron collider will be the Large Hadron Collider at CERN.

- E=14 TeV (center-of-mass)
- $L=10^{34}$ $cm^{-2}sec^{-1}$

It is unclear what the energy scale of a hadron collider beyond LHC would have to be. However, history would lead us to expect that the next step should be a factor of ~5 or greater.

- Hadron collider rule of thumb: Energy×2 ≡ Luminosity×10

Luminosity

One would expect that a luminosity similar to LHC would have to be obtained.

- Probably rules out $\bar{p}$ -p collider

Cost

It is pretty clear that the world, not to mention a single nation, cannot afford to spend double-digits × $\$10^9$ on a new facility.

Goal:	E = 30-50 TeV/beam
	$L = 1\times10^{34}$ $cm^{-2}sec^{-1}$
	$\$ \leq \$100M/TeV$

APPROACHES

$$L = \frac{fBN_1N_2}{2\pi(\sigma_1^2+\sigma_2^2)} = \frac{3\gamma fBN_1N_2}{\beta_L^*(\varepsilon_{N_1}+\varepsilon_{N_2})} F_z(\beta^*/\sigma_z)F_\phi(\sigma_z\phi/\sigma_T)$$

The luminosity formula can be rewritten in a variety of ways to indicate limitations arising from different operational regimes:

1. $\bar{p}$ -p with a limited supply of antiprotons

$$L \propto \frac{\gamma f \Delta\nu_{HO}(BN_{\bar{p}})}{r_0\beta^* N_{IR}(1+\frac{\varepsilon_{N\bar{p}}}{\varepsilon_{Np}})}$$

2. Dependence on magnetic field and circumference

$$L \propto \frac{|\vec{B}|\Delta\nu_{HO}(BN_{\bar{p}})}{r_0\beta^* N_{IR}(1+\frac{\varepsilon_{N\bar{p}}}{\varepsilon_{Np}})}$$

3. p-p with limited linear radiated power density

$$L \propto \frac{P'^2}{|\vec{B}|^5 E^2 B\varepsilon_N}$$

The particular set of parameters looked at here are based on a low magnetic field.

PARAMETERS

Luminosity Parameters	Pbar-P	P-P	
Protons/bunch	**2.50E+11**	**2.50E+10**	
Antiprotons/bunch	**1.82E+08**	**2.50E+10**	
Total antiprotons	1.00E+13		
Proton emittance (95%, norm)	15.00	15.00	pimm-mr
Antiproton emittance (95%, norm)	15.00	15.00	pimm-mr
Longitudinal emittance (95%)	2.00	30.00	eV-sec
Beta @ IP	0.25	0.25	m
Energy	**100.00**	**100.00**	**TeV**
Injection Energy	2.50	2.50	TeV
Arc Dipole Field	**2.38**	**2.38**	**Tesla**
Bend Radius	140.16	140.16	km
Circumference	931.47	931.47	km
Rev. Frequency	321.85	321.85	Hz
Bunches	55000.00	55000.00	
Bunch Spacing	16.94	16.94	m
Bunch Frequency	17.70	17.70	MHz
RF Frequency	177.02	177.02	MHz
Harmonic Number	550000.00	550000.00	
RF Voltage (Coasting)	10.00	10.00	MV
Synchronous Phase	**33.74**	**33.74**	**degrees**
Phase Slip Factor (eta)	-2.58E-06	-2.58E-06	
Bucket area	39.03	39.03	eV-sec
Bunch length (rms)	0.19	0.73	nsec
Momentum Spread (rms)	**5.66E-06**	**2.19E-05**	
Average Current	0.71	0.07	Amps
Peak Current	85.10	2.20	Amps
Impedence Threshold (microwave)	**6.10E-04**	**3.55E-01**	**Ohms**
Machine Impedence (Z/n)	2.00	2.00	Ohms
Microwave Risetime (@10 GHz)	4.15	13.11	sec
Bunch Length (rms)	0.06	0.22	m
Form Factor (Hourglass)	0.98	0.79	
Crossing Half-angle	0.01	0.01	mr
Form Factor	**0.79**	**0.32**	
Beam size at IP	2.42	2.42	microns
Typical Luminosity	**8.43E+32**	**3.77E+33**	**cm-2sec-1**
Integrated Luminosity	169.98	760.53	pb-1/week
Bunch Spacing	**56.49**	**56.49**	**nsec**
Interactions/crossing	**7.14**	**31.97**	
Inelastic Cross Section	150.00	150.00	mbarns

Synchrotron Radiation/Beam-beam	Pbar-P	P-P	
Energy Loss/turn	5.55	5.55	MeV
Synchrotron Radiation Power	3970.54	397.05	kW/beam
Linear Power Density (single beam)	4.77	0.48	W/meter
Damping Time (Longitudinal)	15.80	15.80	hours
Antiproton tune shift (Head-on, 2 crossings)	0.02	0.00	
Helix separation (sigma)	**25.00**	**NA**	
Long Range tune spread (antiproton, 2.5sigma)	**0.03**	**NA**	

Lattice		
Cell Half-Length	300.00	m
Phase advance/cell	60.01	degrees
Gradient Focussing (B'/B)	2.71	1/m
Gradient Magnet Length	290.00	m
Beta Max	965.54	m
Beta Min	368.04	m
Arc length	911.00	km
IR length (each, assume 2)	10.24	km
Phase advance/IR	2.00	2pi
Number of cells	1518.33	
Phase advance (arc)	506.23	2pi
Tune	508.23	
Bending/half-cell	0.12	degrees
Bending Length/half cell	290.00	m
Bend radius	140.16	km
Bend Field	2.38	Tesla
Dispersion Max	3.01	m
Dispersion Min	1.80	m
GammaT	622.41	
Beam Size in arcs (rms, injection energy)	0.95	mm
Beam Size in arcs (rms, full energy)	0.15	mm

Injection Sequence	LEI	IEI	RLHC	
Circumference	6	15	931	km
Peak Field	4.40	2.40	2.4	Tesla
Peak energy	1	2	100	TeV
Ramp Rate (up)	0.25	0.25	0.001	Tesla/sec
Ramp Rate (down)	0.25	0.25		
Cycles to Fill		2.50	62.10	
Fill time	0.07	1.63	121.30	minutes
Acceleration time	0.29	0.16	39.67	minutes
(Deceleration) time	0.29	0.16		
Cycle time/ring	0.65	1.95	160.96	minutes
Accelerating Voltage	1.35E+00	8.46E+00	1.30E+02	MV/turn

ISSUES

Proton-antiproton is probably not viable

- N_p too high (required high to make luminosity)
- Magnet aperture too big (required to accommodate separated orbits)
- No cost advantage if coaxial magnet

Beam stability

- The natural momentum spread is way too low to provide microwave stability. Need to increase the momentum spread.
- Resistive wall rise time is<1 turn for aluminum beampipe

Alignment stability/ground motion

- The synchrotron frequency in this machine is <1Hz.
- The betatron frequency is < 300 Hz.
- Strong susceptibility to low frequency motion of any kind.

Luminosity packaging

- The parameter list shows 32 interactions/crossing for 3.7×10^{33} $cm^{-2}sec^{-1}$ (86 interactions/crossing at 1×10^{34})
- Since the p-p collider is not operating in a beam-beam limited mode, most limitations are relaxed by decreasing the number of bunches while keeping N^2B fixed.
  -> Interactions/crossing $\propto$ 1/B

Machine protection/abort

- Stored energy/beam = 22 GJ for p-p parameters
  220 GJ for $\bar{p}$-p

Injector Complex

- Fill times = hours
  -> dominated by lowest energy superconducting injector
- Correct dynamic range for each stage

Superferric Magnets and Prototype Work at Fermilab

by
G. William Foster

Fermilab

Low Cost Hadron Colliders at FNAL

Old Ideas and New Technology
for the Next Generation of Hadron Machines

G. William Foster

- **Historical Perspective**
- **A 10x Cheaper Magnet**
- **Advanced Tunneling Technology**
- **Prototype & Designs in Progress**

Tevatron → Hera → SSC→ LHC Represents an Evolutionary DEAD END For Superconducting Magnet Technology

1. Cos-Θ Dipoles will never be 10x cheaper.

   Superconductor alone is ~30% of Magnet costs.

   Costs rising nonlinearly with $|B|$.

   High-field magnets are economic disasters even it they work.

2. Synchrotron Radiation is Fatal for 100 TeV CosΘ Magnet.

   LHC-like dipole would never work at 100 TeV.

   Vacuum problem (H2 desorbtion) is also fatal.

THE NEXT HADRON COLLIDER

Already Technically Feasible (unlike other machines)

Therefore, it will eventually be built.

Must be ~10x lower cost (per unit energy)

Must be built at existing lab (to avoid throwing away $3-4B.

The goal of the CheaperCollider R&D Effort is to demonstrate a factor of 10 reduction in (Magnet + Tunnel) costs for the next generation of Hadron Colliders to be built at FNAL.

The Solution to these Problems is Known

And was clearly presented in Snowmass 1982 by R. R. Wilson.

One needs a simplified, lower field, iron dominated SC magnet.

To capitalize on the cost advantage of low field magnets one must take advantage of recent developments in robotic tunneling technologies to bring down the tunnel costs.

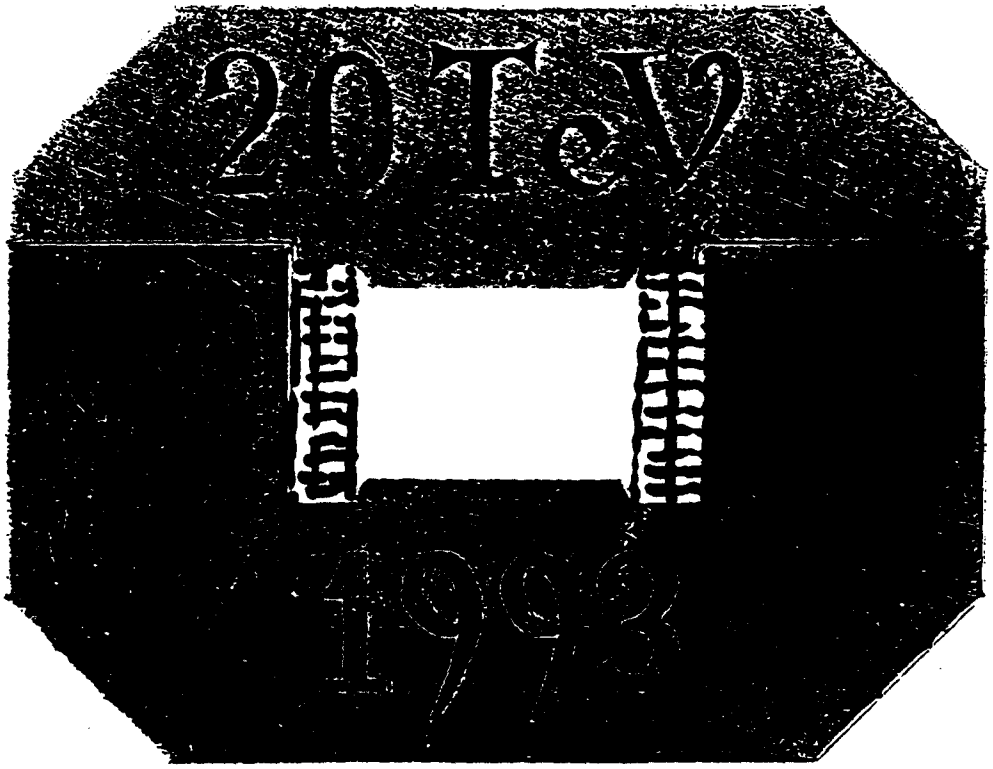
20 TeV
1998

LHC DIPOLE ≈ 110 PARTS IN CROSS-SECTION

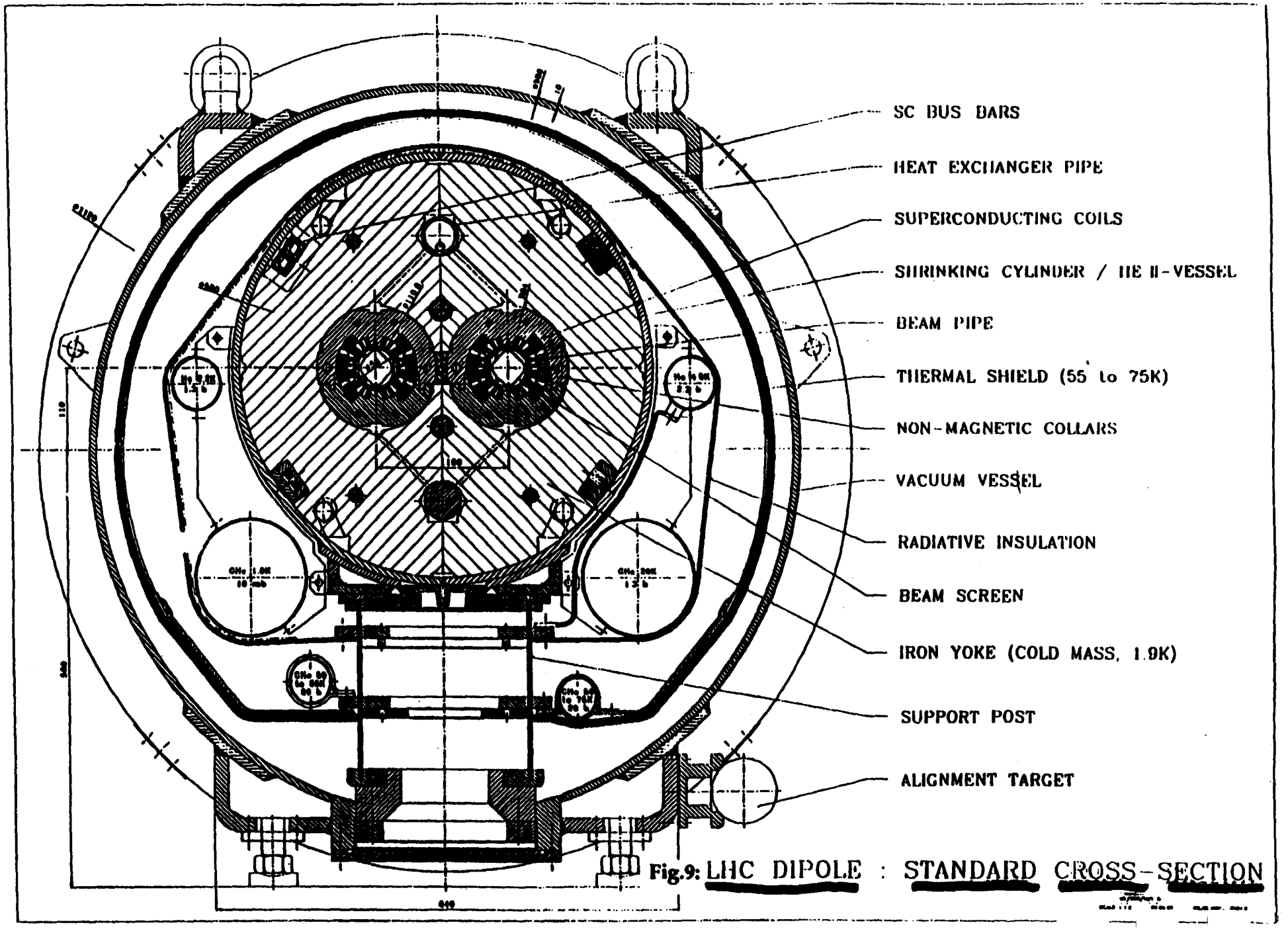

Fig.9: LHC DIPOLE : STANDARD CROSS-SECTION

G.W.Foster 11/15/95

"Double-C" Twin Bore Transmission Line Magnet

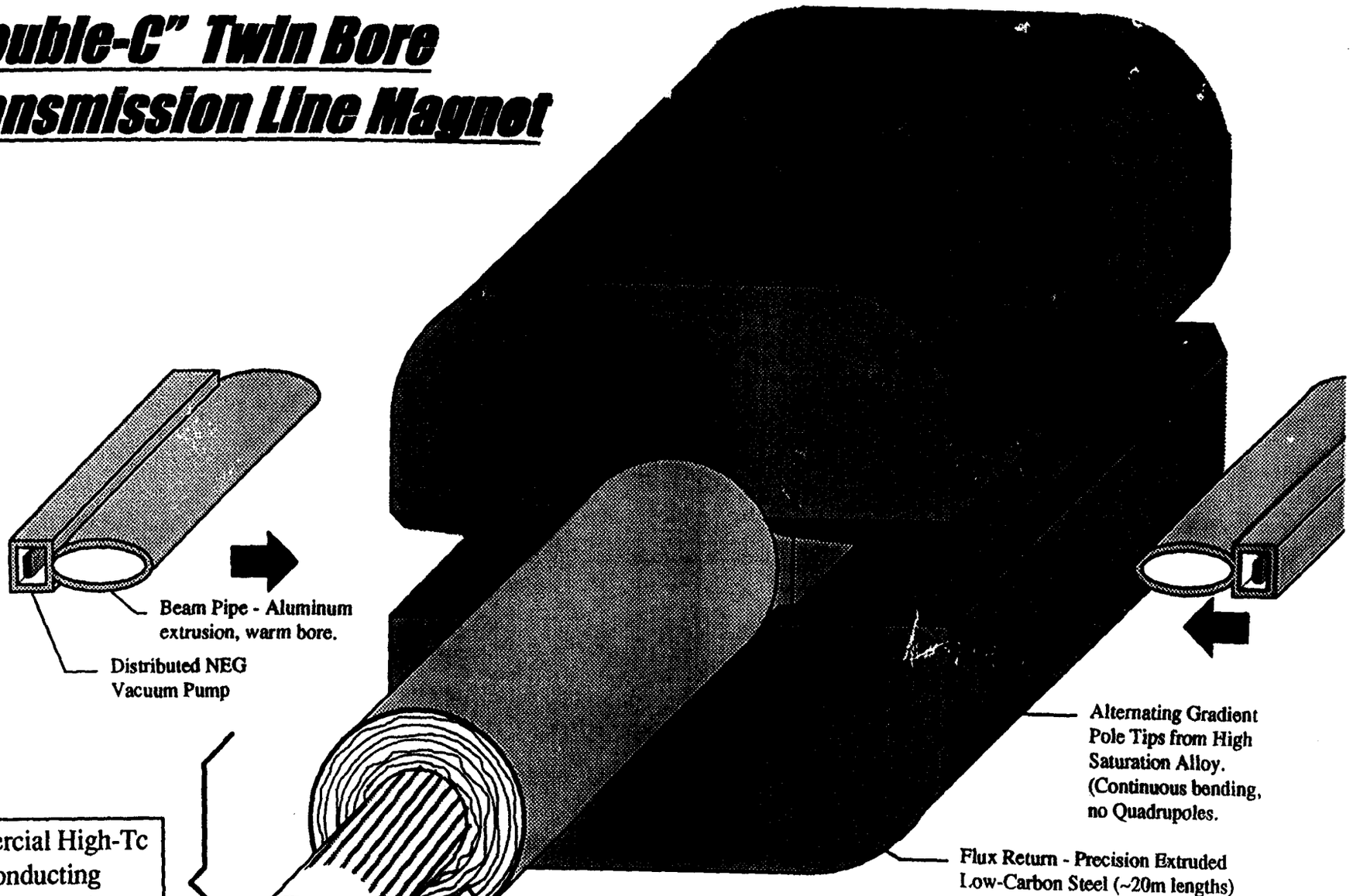

Commercial High-Tc Superconducting Transmission Line ~500m Lengths

DOUBLE-C GRADIENT MAGNET FIELD MAP

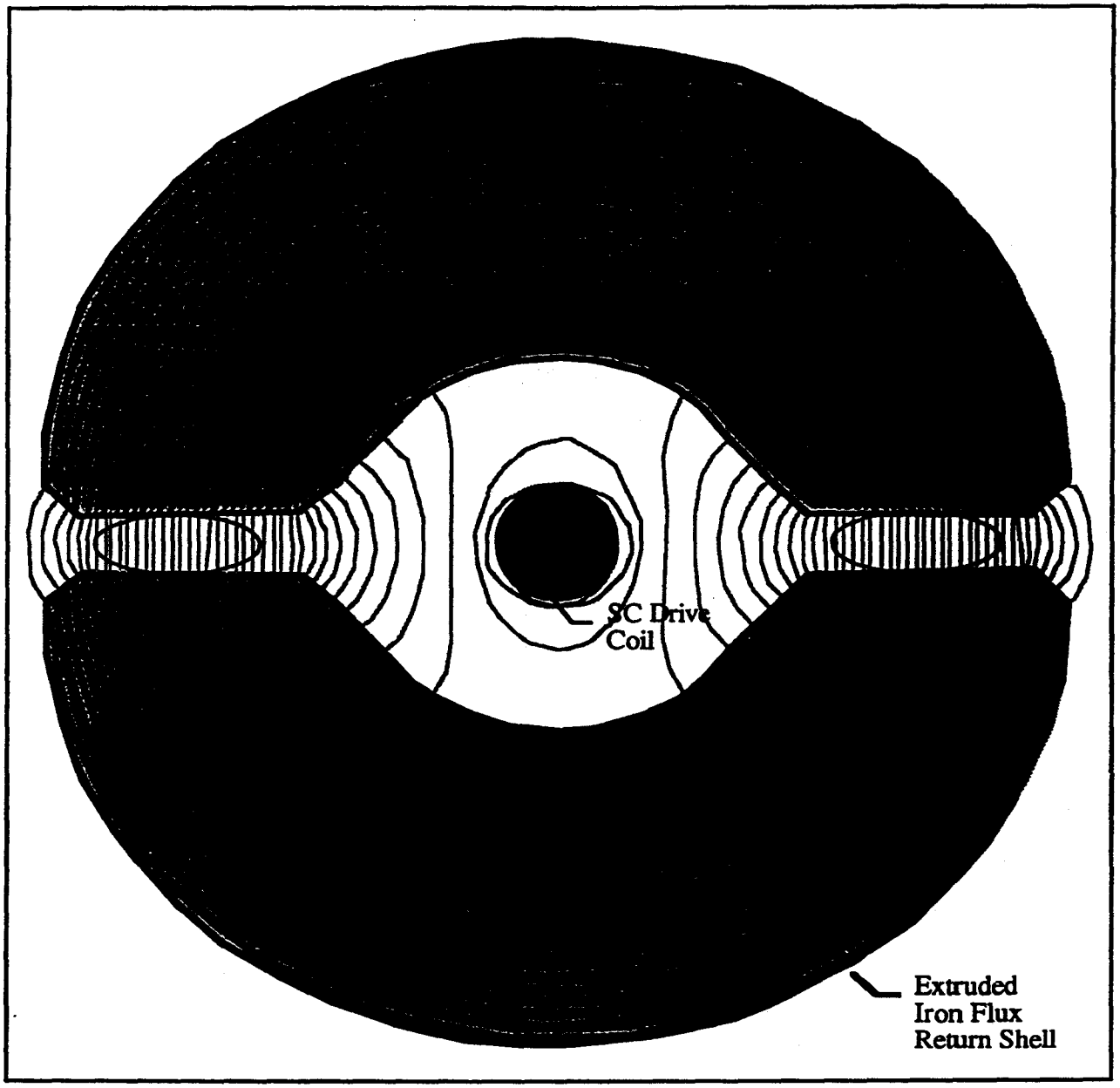

- Single turn magnet with twin apertures for P-P.
- Warm Iron, warm bore driven by a superconducting transmission line at center of magnet.
- No Forces on conductor due to symmetry of design.
- The conductor sees ~1 Tesla, the beams see 2 Tesla.

Comparison of "Double-C" Transmission Line Magnet with LHC Cos-Theta Dipole

COST DRIVERS		LHC	XLC	Cost Ratio
Superconductor	tonnes/TeV	150	7	21x Less Superconductor / TeV
Mass	tonnes/TeV	5,101	471	11x less magnet mass / TeV
Complexity	parts/magnet	~110	~11	10x fewer parts in cross section
Vacuum	welds/TeV	2308	~25	100x fewer welds / TeV
Cryo Wall Power	watts/T-M	60	0.75	80x lower operating cost (LN2)
Tunnel Volume	m**3/TeV	33,750	2,500	14x less earth moved / TeV
STORED ENERGY	kJ/T-m	63	1.2	50x less stored Energy /TeV

MAGNET CONFIGURATION		LHC	XLC	
<B>	Tesla	6.7	2.2	1/3x average bend field
Magnet Configuration		2-in-1	2-in-1	Same 2-in-1 Configuration
Good-field Aperture		1.3cm round	1 x 1.5cm rectangular	Similar Good-field Aperture

<u>....there really is a factor ~10 available from a simpler magnet design.</u>

Transmission Line Magnet

Goal: 10x lower magnet cost per TeV than conventional SC Magnets

2 Tesla Iron-Dominated Magnet
- Warm-Iron / Warm Bore / 2-in-1 Design
- 10x less superconductor/GeV than CosΘ Dipole
- 100x less stored Energy/GeV than CosΘ Dipole

Continuous "Transmission-Line" Cryostat
- Long distances (~1 km) between Cryogenic Junctions
- Parallels Industrial Development of High-T_C SC Power Transmission Lines

No Magnetic Forces on Conductor
- Transmission-line conductor is at force null in "Double-C" design
- Easy Cold Mass support
- Small heat leak ~25 mW/m

Aluminum Extrusion/ NEG Pumped Vacuum System
- Aluminum extrusions inexpensive in long lengths
- Standard solution for Electron Machines
- Vacuum system less demanding since no synchrotron desorbtion

"C-Magnet" Advantages
- Field can be mapped prior to beam pipe installation
- Beam pipe can be repaired/replaced without touching cryogenics
- Access to magnet pole tips for shimming/trimming/survey
- Access to vacuum system for BPM's, pumps, etc.

Alternating Gradient Pole Tips
- No Quadrupoles to interrupt Transmission-Line Cryostat
- No Interruption of Bend Field - Filling Factor ~100%
- Use high-saturation alloy Pole Tips to permit B>2T

Small Cold Mass ~1.6 kG/m
- Fast Cool-Down
- Simple Cold-Mass Support ("spiders") like Liquid He transfer line

REV.	DESCRIPTION	DRAWN / APPD.

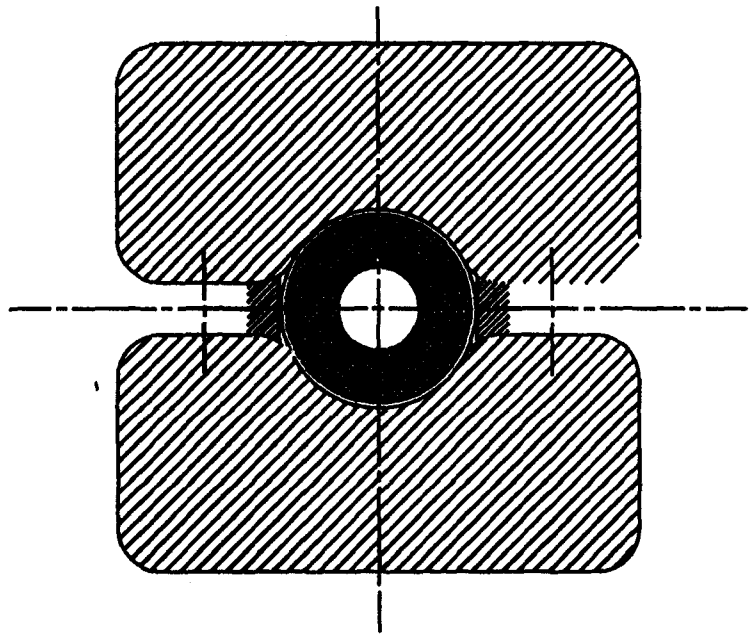

ITEM	PART NO.	DESCRIPTION OR SIZE
PARTS LIST		

UNLESS OTHERWISE SPECIFIED	ORIGINATOR
± ± ±	DRAWN
	CHECKED
1. BREAK ALL SHARP EDGES (.030 MAX.)	APPROVED
2. DO NOT SCALE DRAWING.	USED ON
3. INTERPRETATION BASED UPON ANSI Y14.5M-1982	
4. MAG. ALL MACH. SURFACES ✓	MATERIAL

FERMI NATIONAL ACCELERATOR LABO
UNITED STATES DEPARTMENT OF ENERG

SCALE	FILMED	DRAWING NUMBER
		MIKE8.DW

CADFILE:	CREATED WITH I-DEAS_V1	USER NAME:

G.W.Foster, E. Malamud 10/17/95

THE ARGUMENT FOR LOW-FIELD MAGNETS

If your goal is 10x lower cost per Tesla-Meter,

1) you can forget conventional Cos-Theta Dipoles
   - the conductor cost alone is ~30% of magnet cost
2) you can forget high-field magnets
   - the conductor cost (per Tesla-meter) increases rapidly with B
     (diverges as you approach the short-sample limit...)
   - the structural material needed to collar the coil goes as B^3
3) you better seriously consider iron-dominated magnets
   - iron contributes a factor of 2-5 for a SC magnet of ~2-3T
   - the SC can see significantly less field than the gap
     (higher current density-->less conductor]

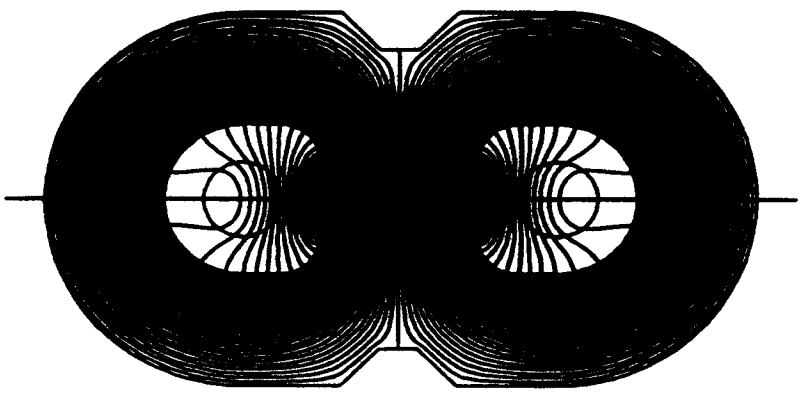

Field Map of 2.2T warm-iron Superferric magnet with 1cm x2cm bore. Shown actual size, this is a 1-turn magnet driven by two 20kA high-temperature superconductor transmission lines in separate cryostats.

Table 1. Accelerator Dipole Coil Comparison

	Inner Coils				Outer Coils			
	J ↓	w	Fe	B ↑	J	w	Fe	B
Tevatron[1]	369	0.78	1.21	2.66	369	0.78	1.30	1.78
HERA[2]	374	1.0	1.22	3.53	355	1.0	1.34	2.45
SSC[3]	253	1.21	1.2	2.84	389	1.17	1.4	3.9
LHC[4]	266	1.7	1.1	3.86	492	1.7	1.25	6.31

J Coil average current density (A/sqmm)
w Coil radial width (cm)
Fe Effective current density increase due to iron
B Cenral field due to one coil (T)

to more closely approximate the ideal cos(mθ) distribution and/or by adjusting the coil shell angles.

The central magnetic field obtained from a single current shell of the type depicted in Figure 1 is equal to

$$B_0 = \frac{2}{\pi} \mu_0 J w \left(1 + \frac{R^2}{R^2_{Fe}} \right) \sin\theta \qquad (1)$$

where μ_0 is the permeability of free space, J is the current density (averaged over the whole coil including the stabilizing copper, insulation, spacers and voids), w is the radial width of the coil, R is the average radius of the coil, R_{Fe} is the inner radius of the magnetic iron, and θ is the coil shell angle. This equation is strictly valid only for coils with uniform current density but good agreement, a few percent, is obtained when applied to actual coils with coil spacers. Note that except for the presence of magnetic iron, that the achievable bore field is proportional to the product of the average current density and the radial coil width. The coil radius is a free parameter. Its choice is a compromise between competing requirements; increasing the radius improves the obtainable field accuracy while decreasing the radius reduces the magnet cost and coil stress.

The average current density, coil width, iron field enhancement factor and bore field have been compiled in Table 1 for the inner and outer coils of several operating or proposed accelerator magnets. The current density at 5 T and 4.2 K in the NbTi of superconducting strands has almost doubled since the design of the Tevatron dipole, but the average current density in the inner coils of recent high field designs has gone down relative to the current density of the Tevatron. The increase in field in post Tevatron magnets has been achieved by increasing the coil widths; the

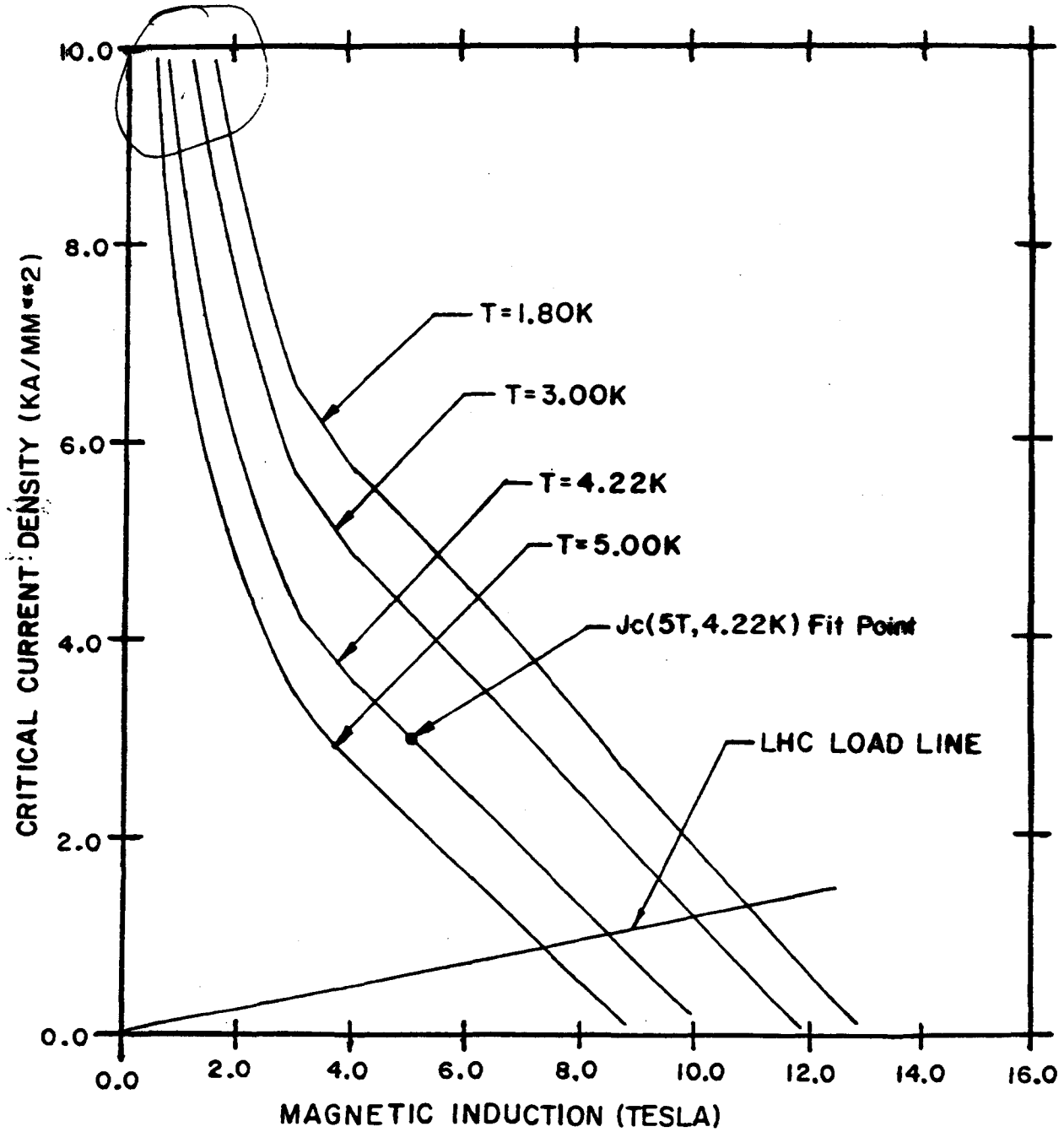

Figure 2. Critical current density[5] for commercially available NbTi superconductor and the LHC dipole magnet[4] load line.

Double-C Magnet w/return in Pipe Cycle = 840

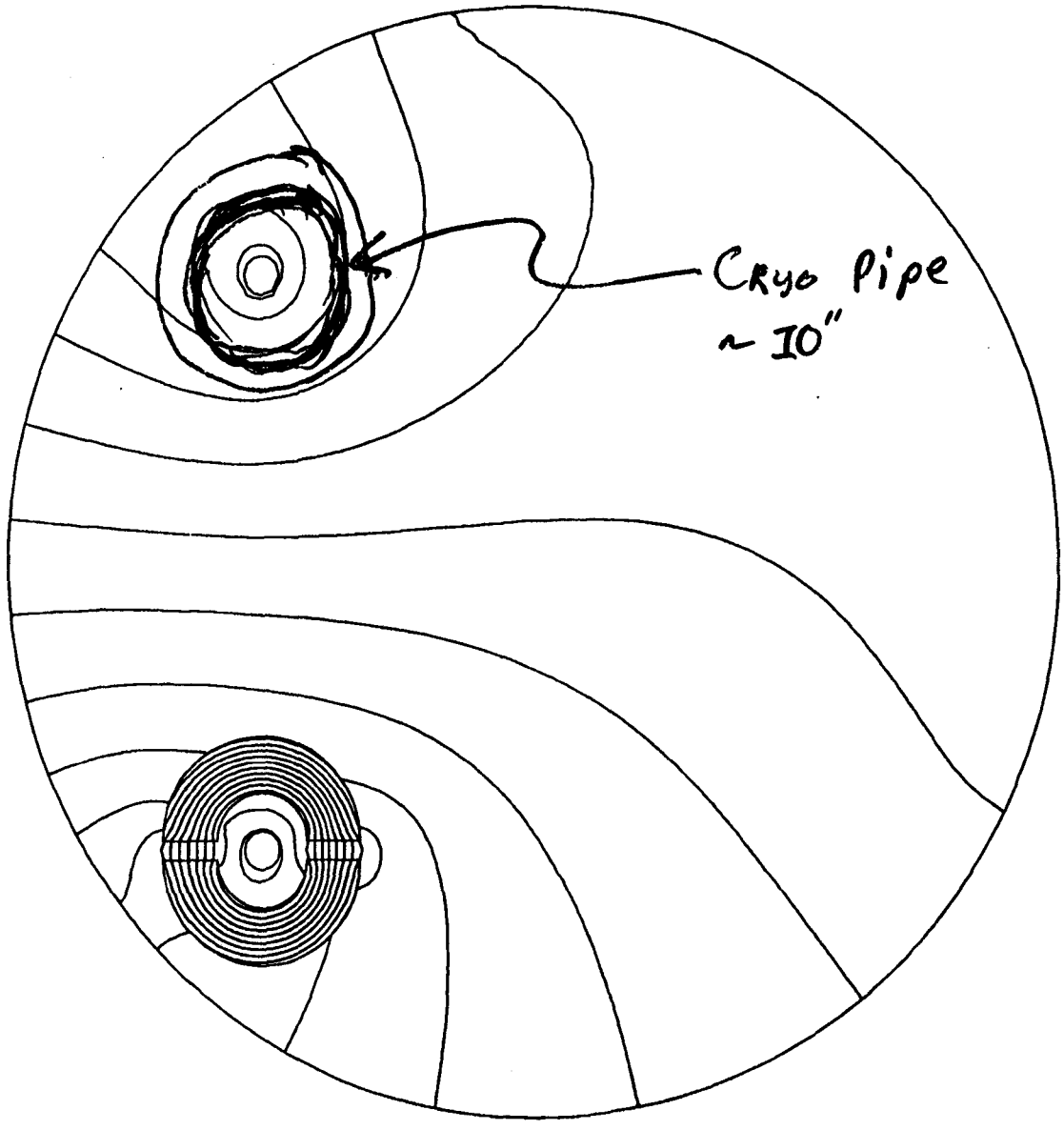

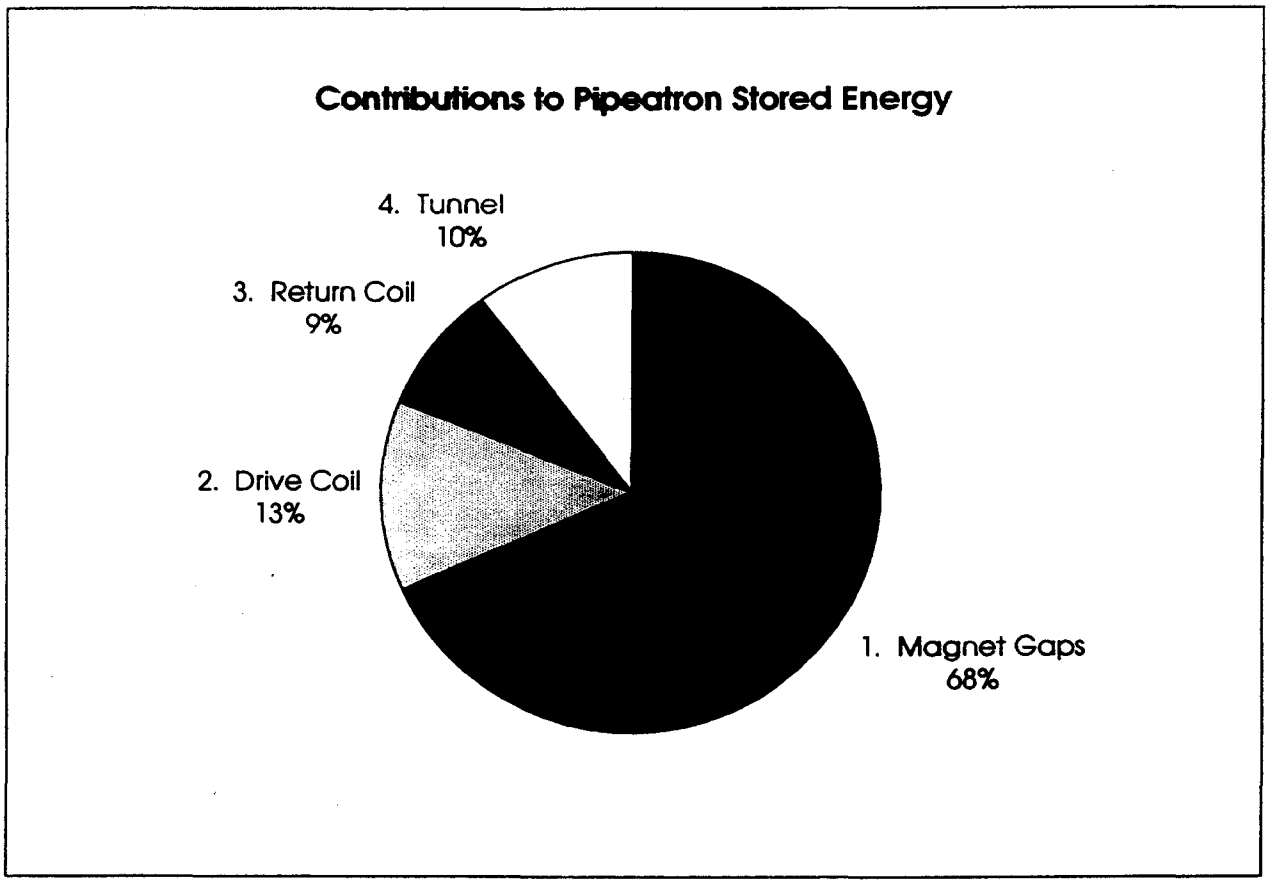
Contributions to Pipeatron Stored Energy
4. Tunnel
10%
3. Return Coil
9%
2. Drive Coil
13%
1. Magnet Gaps
68%

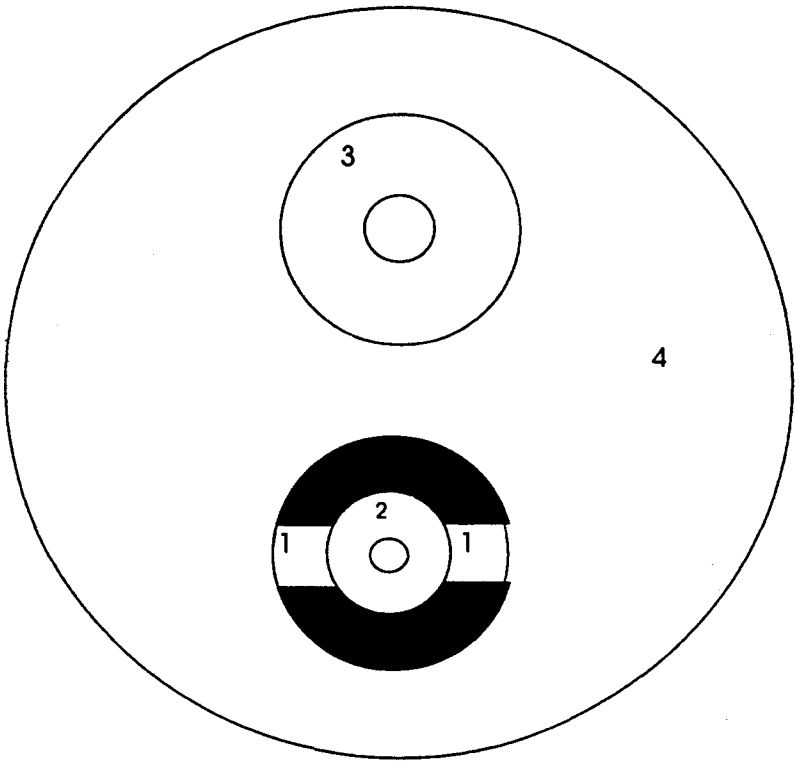
3
4
2
1
1

G.W.Foster, E. Malamud 10/17/95

IT'S THE APERTURE, STUPID!

Most magnet costs go as (aperture)^2

What drives the aperture requirements?

- -resistive wall instabilities (can electronically feed back)
- -alignment (==> automate)
- -dynamic aperture (field quality)

Important Difference between Iron magnets and CosΘ SC magnets:

- The good-field aperture starts 1-2cm away from coils in conventional SC magnet (conductor placement errors)
- The good-field aperture goes right up to the pole tip in an Iron-dominated Magnet

==> The iron-dominated magnet gets increasingly attractive for smaller bore sizes

Demonstration of a 1cm x 2cm aperture superferric magnet ring in the Tevatron tunnel will lay this issue to rest

- This is the most cost-effective piece of R&D in all of accelerator physics for the next few years.
- There is enough leftover SSC cable for a 15 TeV machine

A 20 TeV CheaperCollider™

- Uses less superconductor than the Tevatron
- Has 10x less stored energy than the Tevatron
- Uses less iron than the Main Injector
- Moves 10x less earth than the Main Injector

VACUUM SYSTEM

Aluminum Extrusion Beam Chamber

- Continuous in 250m Lengths
- Periodically Anchored to Iron to Control Thermal Effects
- Distributed Non-Evaporable Getter (NEG) Pump
- High-Conductance Side Chamber for Pump Down

Half-Cell Module Every 250m

- X-Y Beam Position Monitor (BPM)
  (located at Beta-Max in each 1/2 cell)
- Ion Pumps Every 250m for noble gasses
- Roughing port Every 250M for Pump-down
- NEG strip power feedthrus
- Half-Cell module is continuation of beam pipe extrusion
  (permanently welded vacuum system within magnet)

Magnet Ends

- Quick Disconnect at end of each magnet for Robotics
- "Manual" Gate Valve at end of each magnet
- Magnet can be Transported & Reconnected Under Vacuum

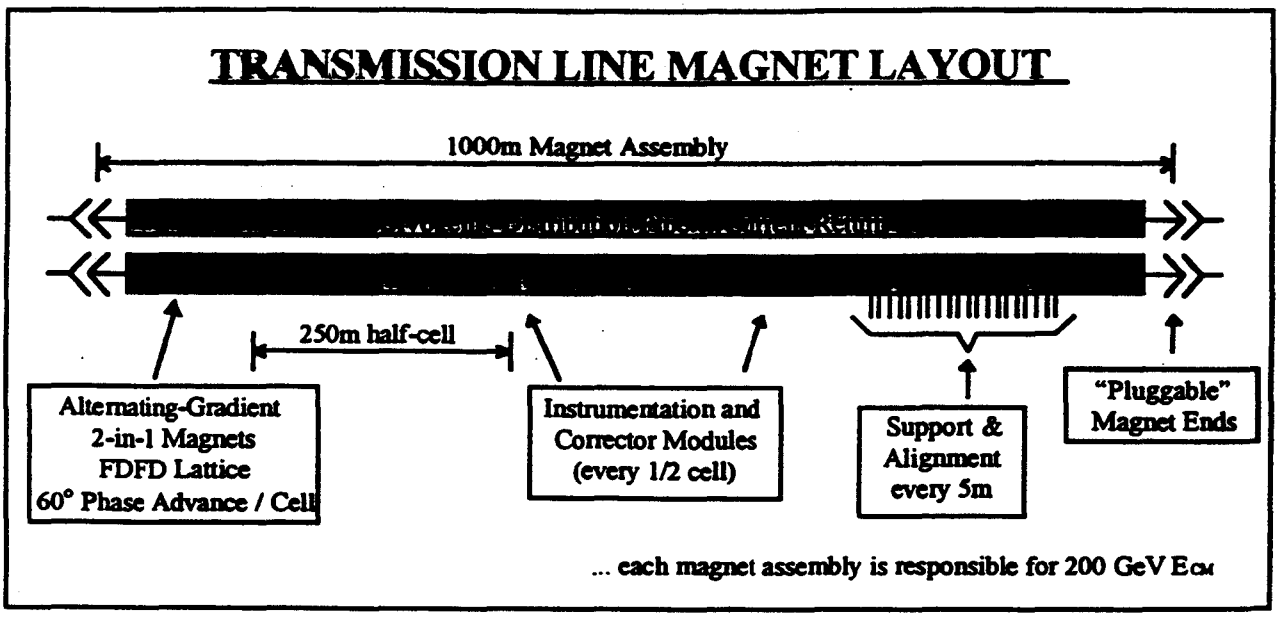

INSTRUMENTATION SUBSYSTEM ON 1KM MAGNET ASSEMBLY

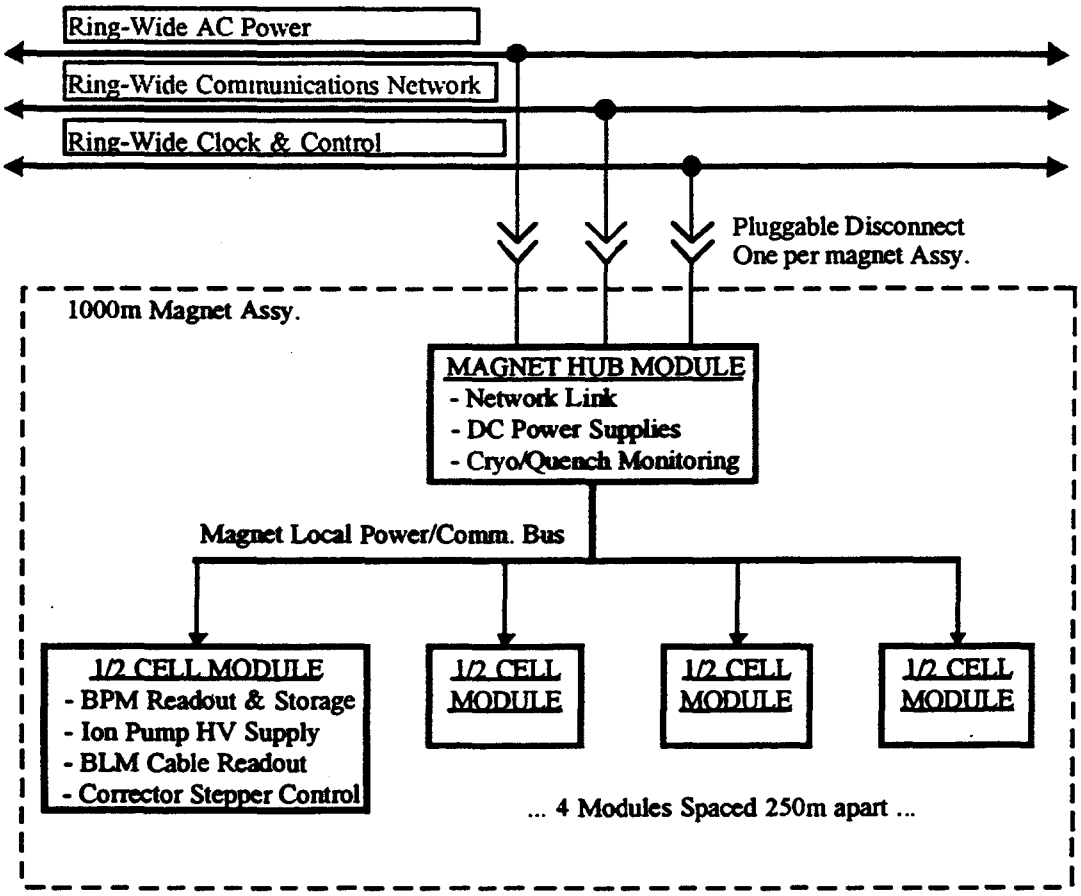

MAGNET ELECTRONICS MUST BE:

- *Rad-Hard*
- *Redundant (Fault-Tolerant)*
- *Multiplexed to Reduce Cabling*
- *Hermetically Sealed*
- *Modular and Pluggable for Robotic Replacement*

Electrical Segmentation of Ring Power

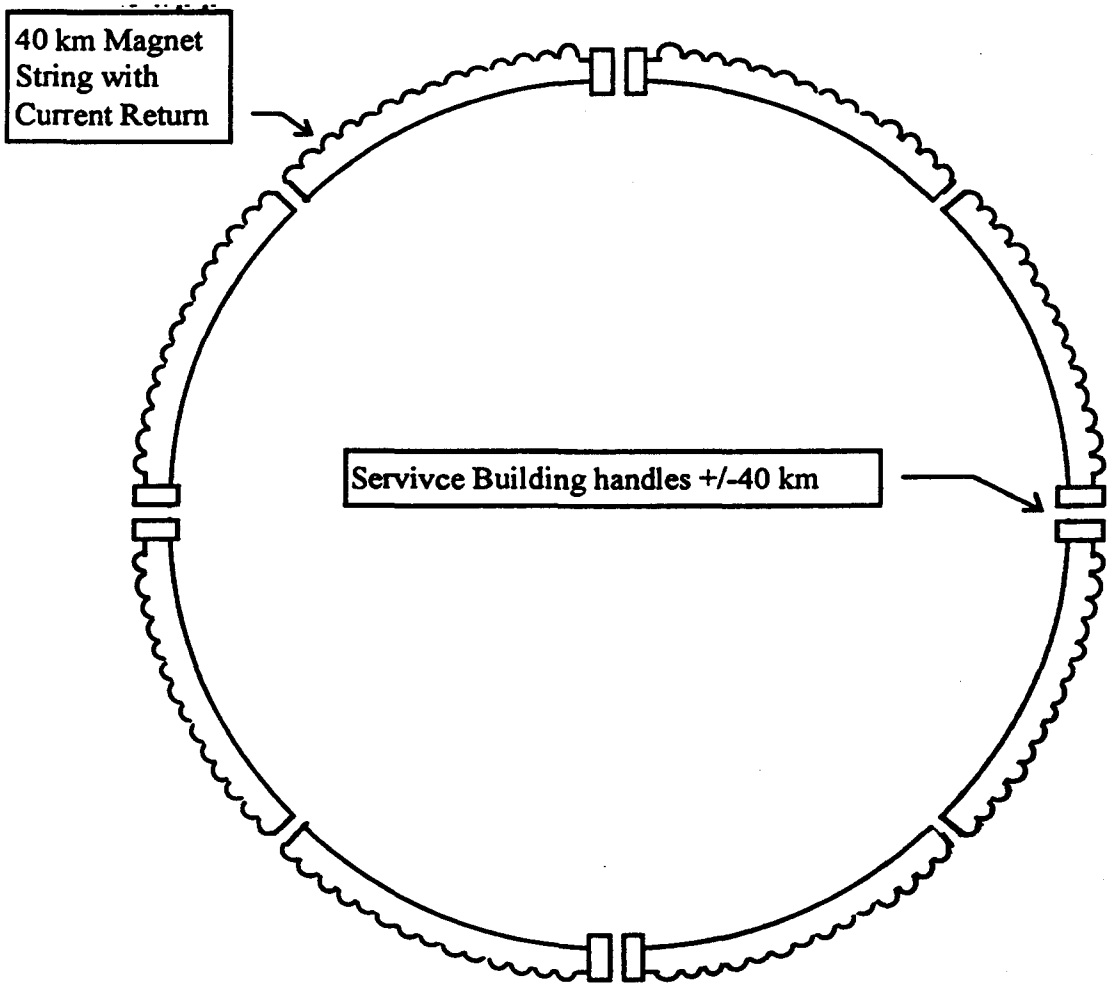

Example of 32x32 TeV machine electrically segmented into 8 sections and four Service Buildings. Each building serves all power supply and quench protection functions for 80km of tunnel and magnets. The segmentation of the cryogenic system is identical.

MAGNET POWER SUPPLY AND QUENCH PROTECTION SUBSYSTEMS

- Ring is Electrically Divided into 40km (4 TeV) sections
- Each Section Contains 40 magnets
- Peak Drive Current = 50kA
- Total Inductance = 80 mH (= 2 mH / 1km magnet)
- Stored Energy 100 MJ (= 2.5 MJ / magnet)
- Ramp Time = 1000 secs (= 17 mins)
- Ramp Voltage = 4V (= 50 kA * 80mH / 1000 sec)
- Peak Ramp Power = 200kW (= 50 kA * 4V)
- Dump Resistor $R_{DUMP} = 0.08\Omega$
- Dump Time Constant L/R_{DUMP} = 1 second
- Peak Voltage to Ground During Dump = ± 2 kV
- Conductor Quench Current Capability = 1250 MI^2T

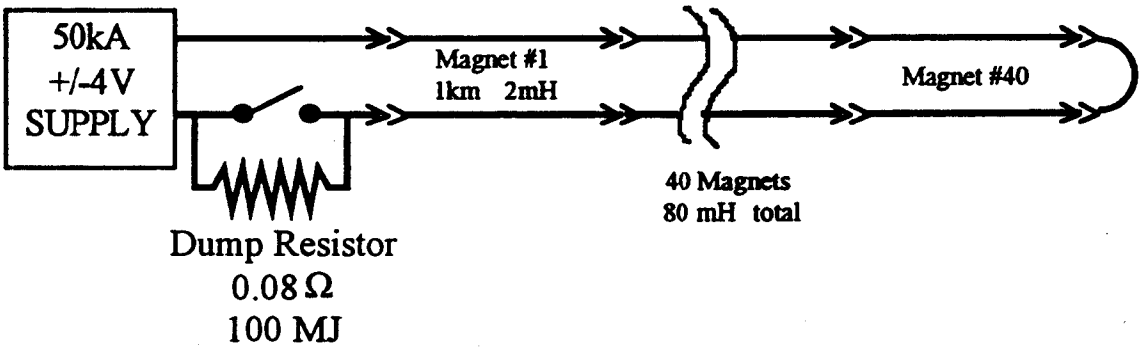

32 x 32 TeV PIPEATRON
INDIANAPOLIS PARAMETERS

MAGNET

Magnet Type	2-in-1 "Double-C" Transmission Line Magnet
Iron/Vacuum	Warm Iron/ Warm Bore
B max	2.0 Tesla
Focusing	Combined Function Pole Tips - no Quadrupoles
Electrical Configuration	Single Turn Magnet
Drive Conductor	Superconducting Transmission Line
Current Return	in Cryopipe Above Magnet
Magnet Gap	1.5cm (vert) x 3cm (horiz)
Good-Field Aperture	1.3cm (vert) x 2cm (horiz) (at injection)
Cryo Cold Pipe OD	3cm
Cryo Pipe OD	5.9cm
Flux Return ID	6cm
Flux Return Max Dimensions	15cm x 15cm (6"x6")
Magnet Length	1km
Iron Length	25m extruded segments
Supports	5m Spacing, 3-axis adjustment

TUNNEL

Arc Circumference	320km
Pipe Diameter	120cm (48")
Lining	1/4" Steel Pipe with alkaline grout in annular space

RING SEGMENTATION

Surface Penetrations	80km Spacing (one per 8 TeV beam Energy)
Cryogenic & Electrical Loops	+/-40km from Service Building

SUPERCONDUCTOR (liquid He Option)

Conductor	6mm**2 Nb-Ti
Peak Field	0.8T at Conductor
Temperature	4.3K - 4.8K
Current Density	10kA/mm**2
Stabilizer	~1.5cm**2 Copper to Carry Quench Current

ELECTRICAL

Drive Current	60 kA
Stored Energy	3.6 kJ/m (including current return and stray)
Inductance	2.0 uH/m (80 mH total inductance per 40km loop)

QUENCH PROTECTION

Method	Dump Resistor at Surface Penetrations
Segmentation	40km loops per Dump Resistor
Dump Resistor	1.25 sec Time Constant
	120 MJ Energy Dump per Resistor
Dump Voltage	+/-2kV to ground during dump

LATTICE (32 TeV, Neuffer option 2E)

Cell Type	FD Combined Function
1/2 Cell Length	150m
Phase Advance/Cell	60 degrees (machine tune = 167)
Beta Min, Max	184m, 483m
Dispersion Max	2.28m
B'(T/m)	7.05 T/m (B varies +/-5% across magnet gap)

Demonstration / Test Facility

Goals:

- Demonstrate "Transmission-Line Magnet" Concept Using Helium Conductor
- Test Bed for field quality demonstration and pole tip development
- Compatible with eventual upgrade to High-Tc conductor

Proposed Test Setup:

- Single 60kA current loop
- 2T field in two 1.5 cm magnet gaps
- Current loop driven as shorted single turn secondary winding on transformer.
  - This procedure avoids high current cryogenic leads.

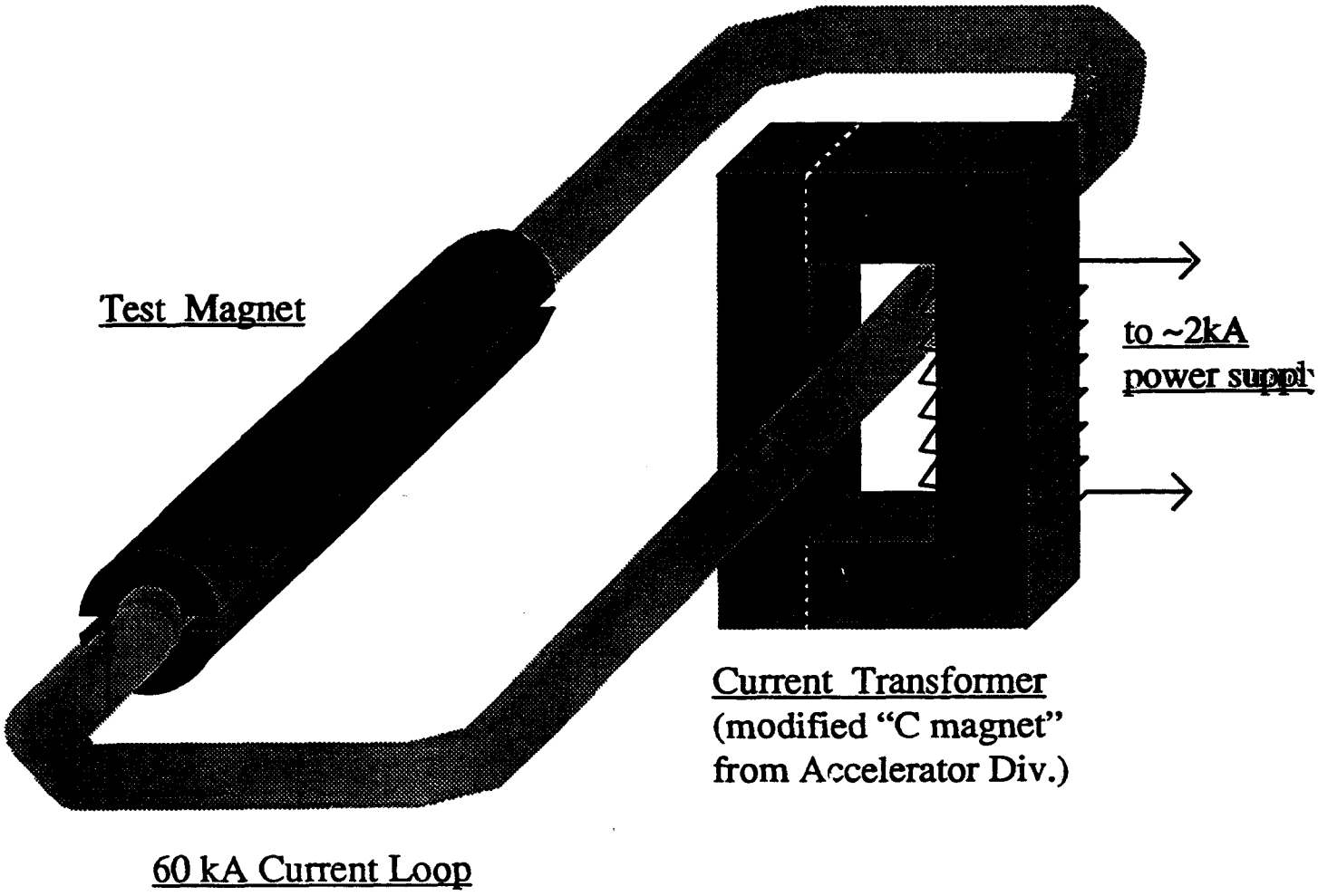

CRYOSTAT FOR Cheaper Collider TEST MAGNET

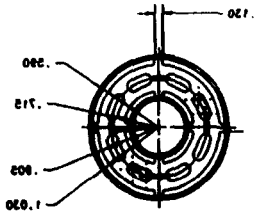

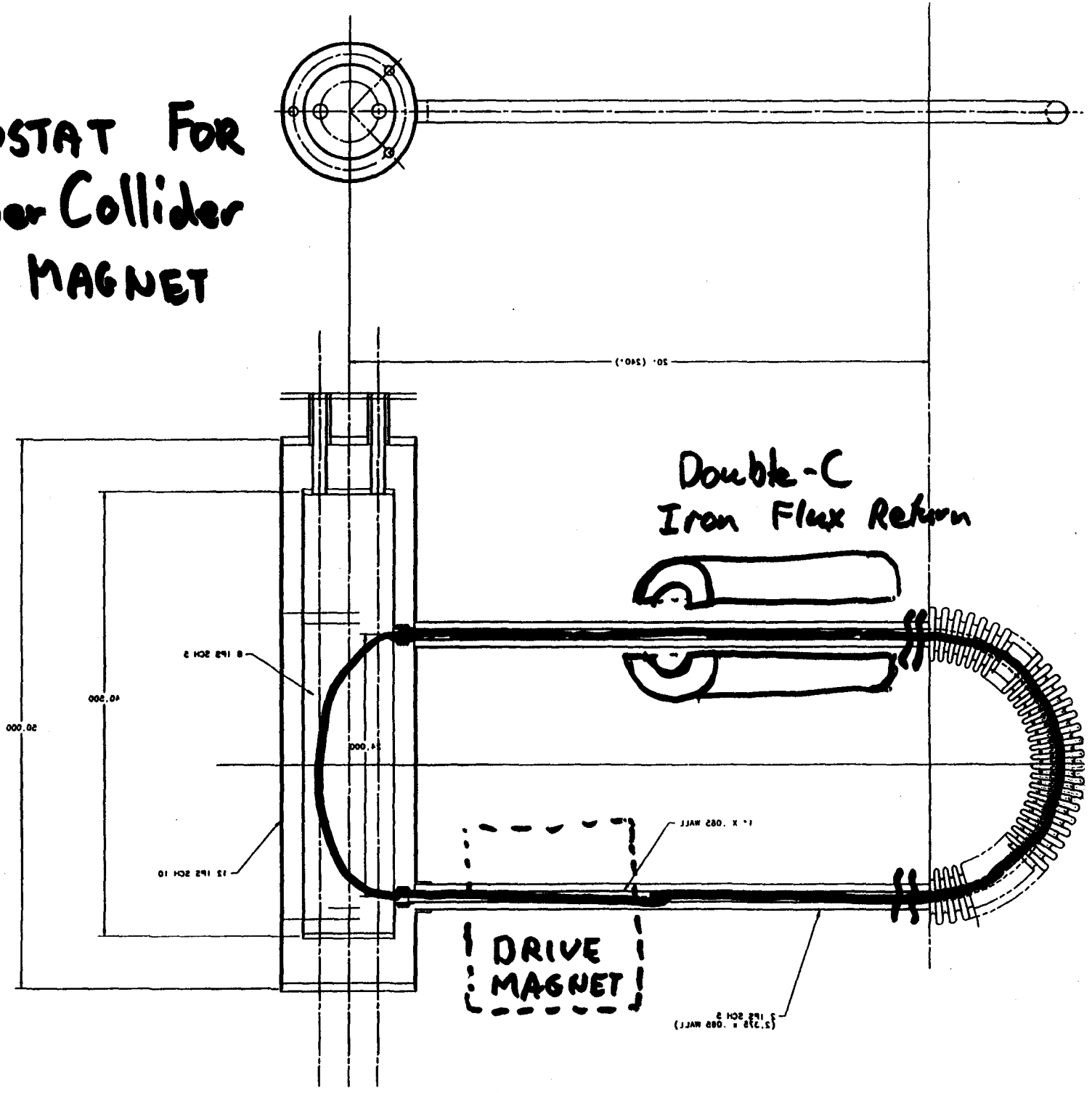

VERY CLEVER SPIDER DESIGN
(P. Mazur)

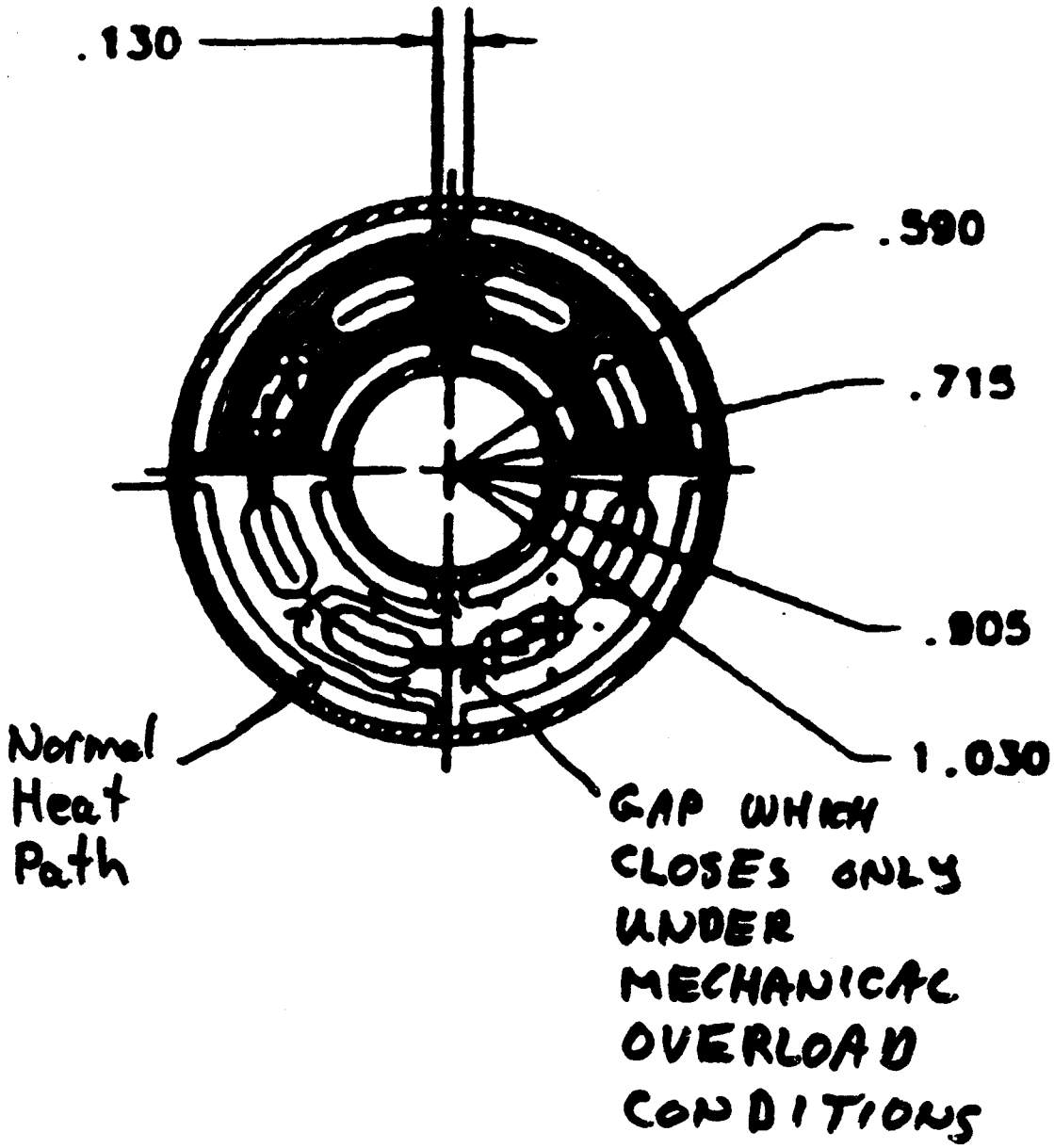

ESTIMATED HEAT LEAK ~50 mW/m (Radiation)
+ 5 mW/spider

⇒ 100 mW/meter

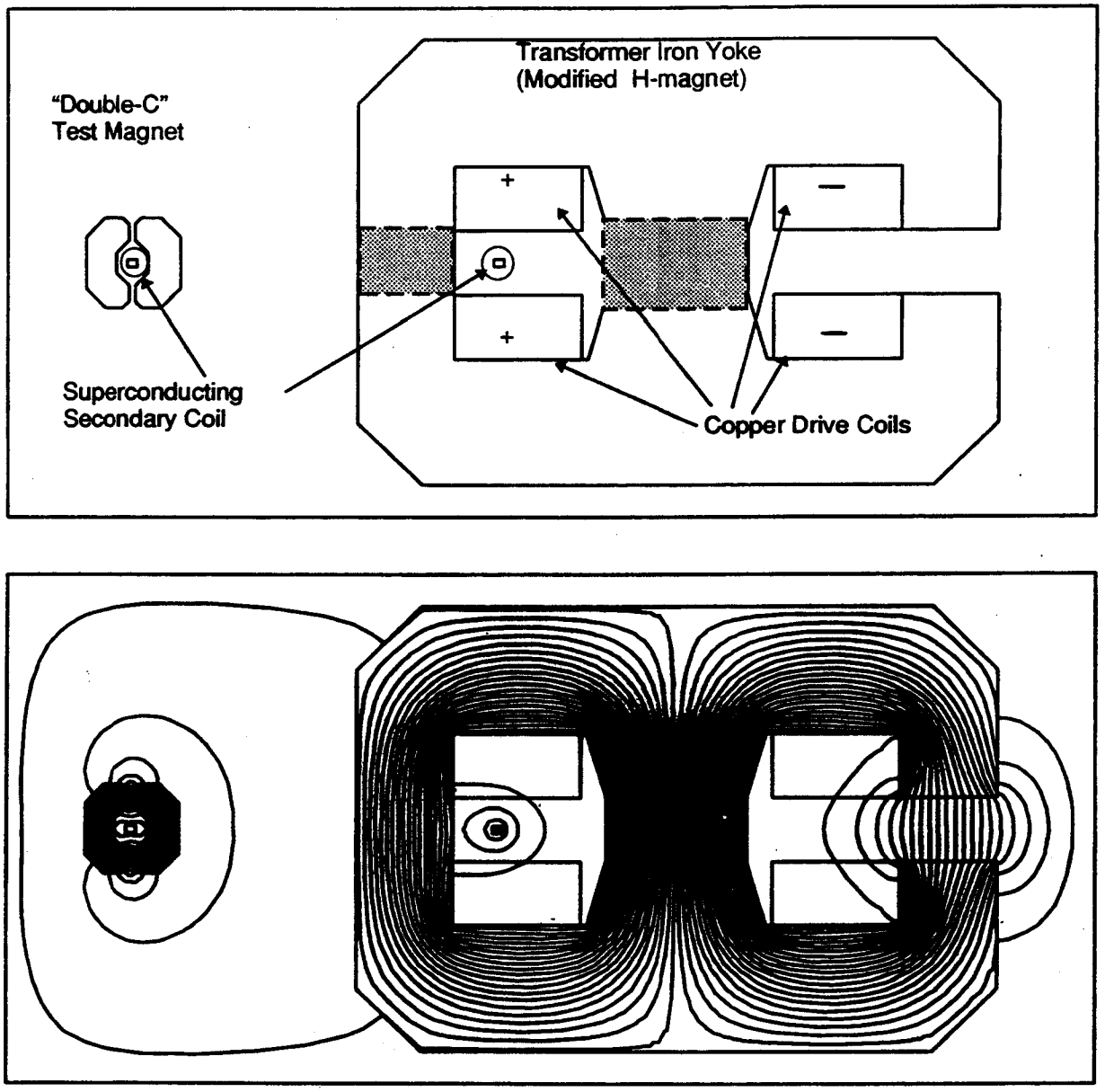

Fig. 3 - Transformer constructed using modified H-magnet. The starting point is a 1m "sweeper" magnet which was built from accumulator dipole laminations. The magnet is re-gapped from 2" to 6" by ading 4" of material to the left side leg, and the center gap is plugged with iron to complete the magnetic circuit. The right side leg is left open to avoid saturating the iron in the center gap. The concept works well, with the only drawback being a small amount (~10%) more stored energy due to the the B-field in the right side gap. The cryostat for the secondary winding must be moved approximately 3cm left of center to place it in the "null force" position.

HTS
Transmission Cable

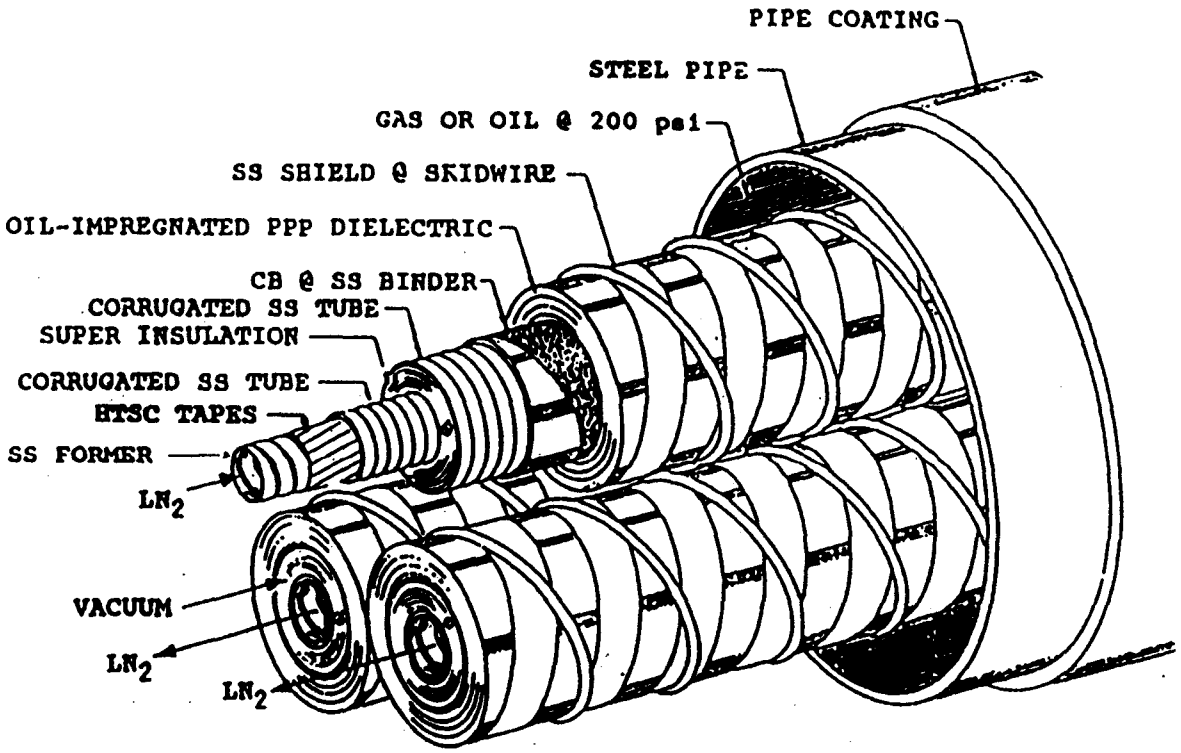

G.W.Foster, E. Malamud 10/17/95

HIGH Tc SUPERCONDUCTING CABLE

This is a key technology not available to the SSC or LHC.
Commercially available conductor
- for use in LN_2 Cooled Transmission lines
- getting better all the time
- ultimate limit (single crystal YBCO] is ~1e7A/cm^2 @77K
- Ferric magnet with 1cm gap needs ~20kA on each side.

Projected cost of Los Alamos conductor is $5/kA-Meter @77K
- this is $200/meter for 2.5T, 1cm vertical gap iron magnet

Liquid Nitrogen Cryogenic System is *much* cheaper than Helium
- ...and *much much* cheaper than superfluid He
- (liquid Hydrogen is also a possibility: no ES&H for robots)

High Carnot Efficiency (1/5 instead of 1/200th)
- Lower Operating Costs
- Evades Problems with Synchrotron Heat Loading at 30+TeV

Quenches due to conductor motion not a problem
- (materials have some heat capacity at 77 K)

Argues for warm-bore, warm-iron magnet design.

Successful superferric magnets based on liquid He cryogenics have been made. The magnet design issues can be addressed using cryostats with existing 4.3°K conductors while the 77°K conductor development proceeds in parallel.

EXTRUDED STEEL MAGNET YOKES

Now possible to get solid steel extrusions
- good tolerances
- long lengths
- $0.40/lb.
- extrusion must fit inside 6" diameter hole...no problem.

No need for laminations for machine with 5-20 minute ramp
- avoids handling costs of laminations
- self-supporting steel structure

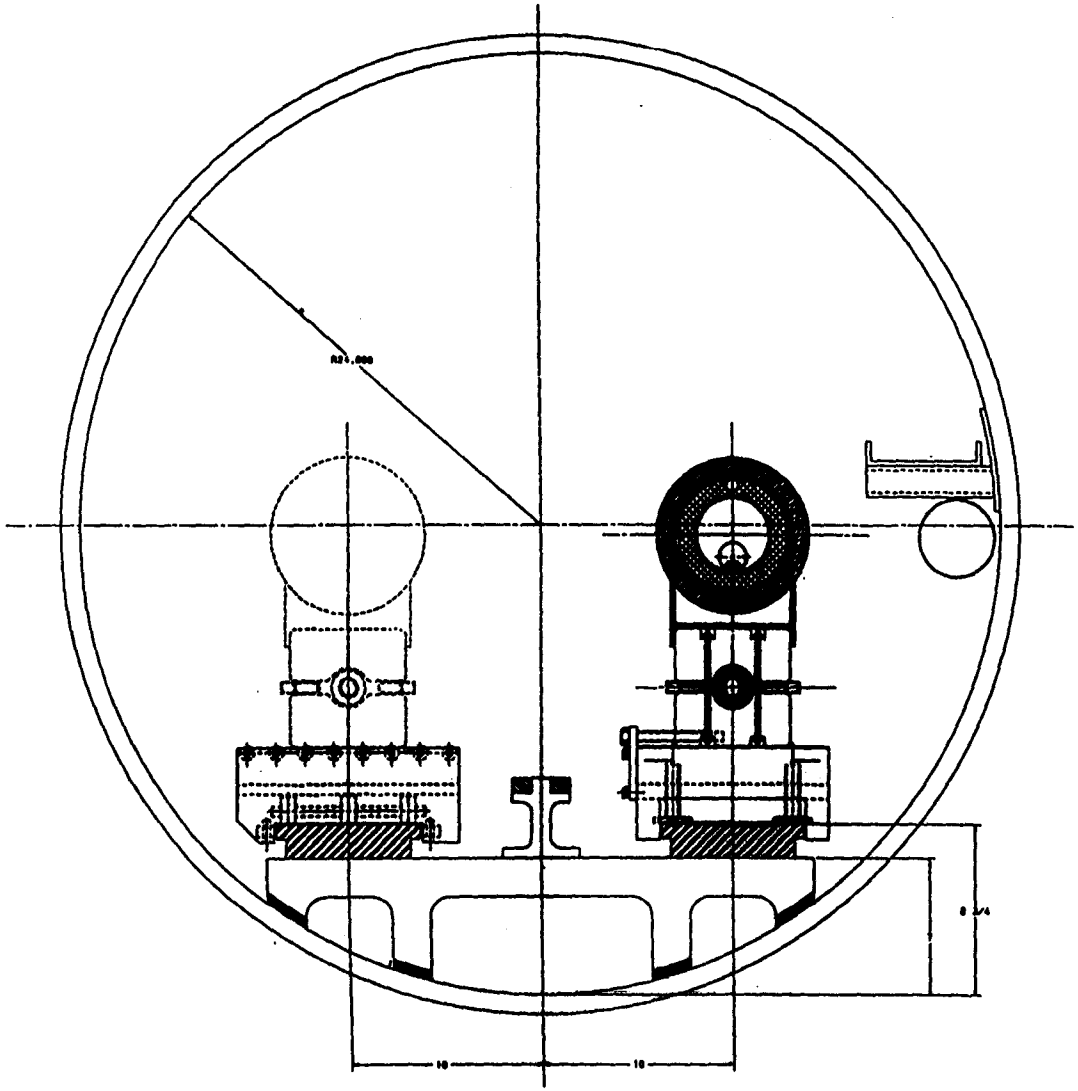

PARTS LIST

MIKE3.DWG

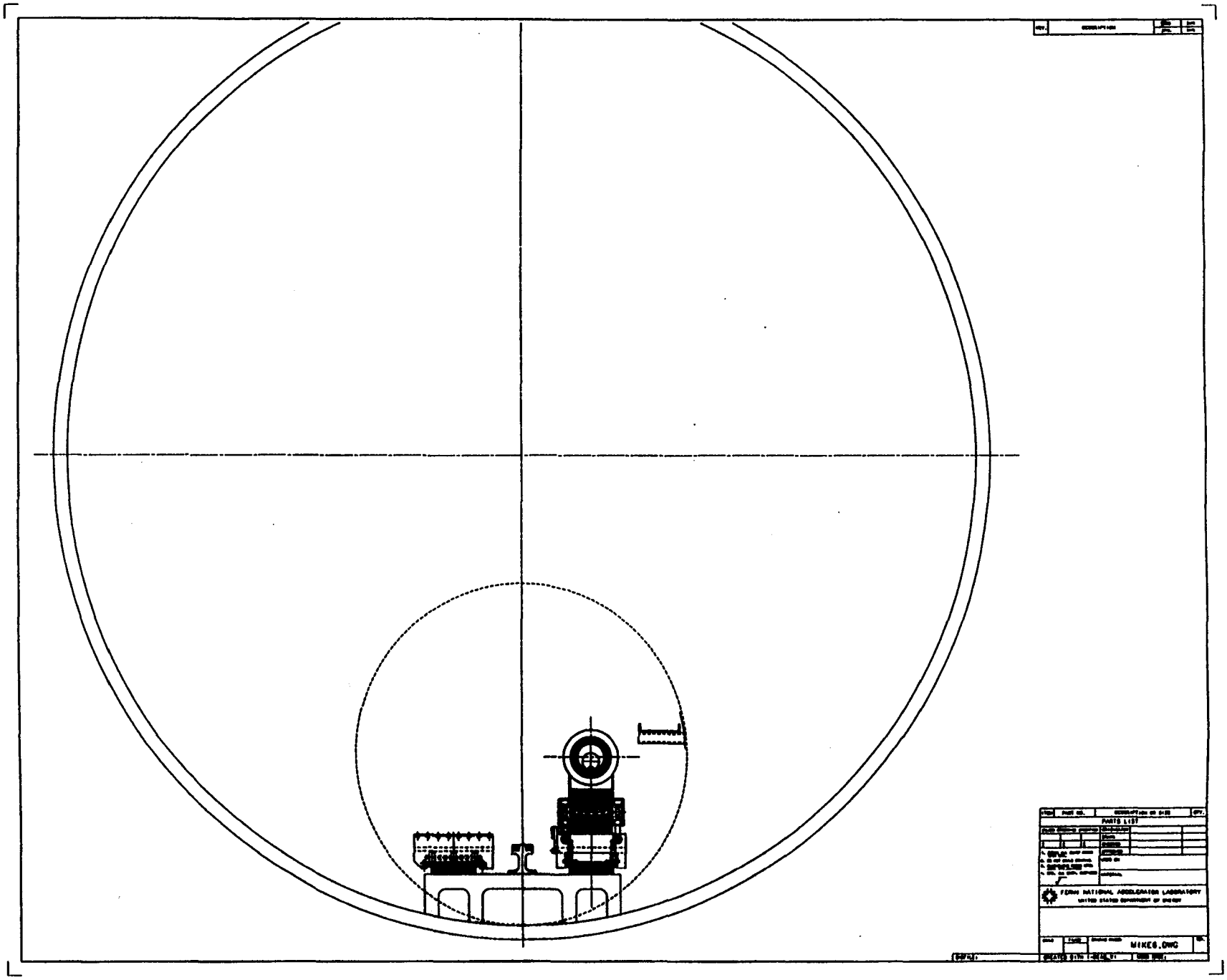
PARTS LIST
FERMI NATIONAL ACCELERATOR LABORATORY
UNITED STATES DEPARTMENT OF ENERGY
MIKE6.DWG

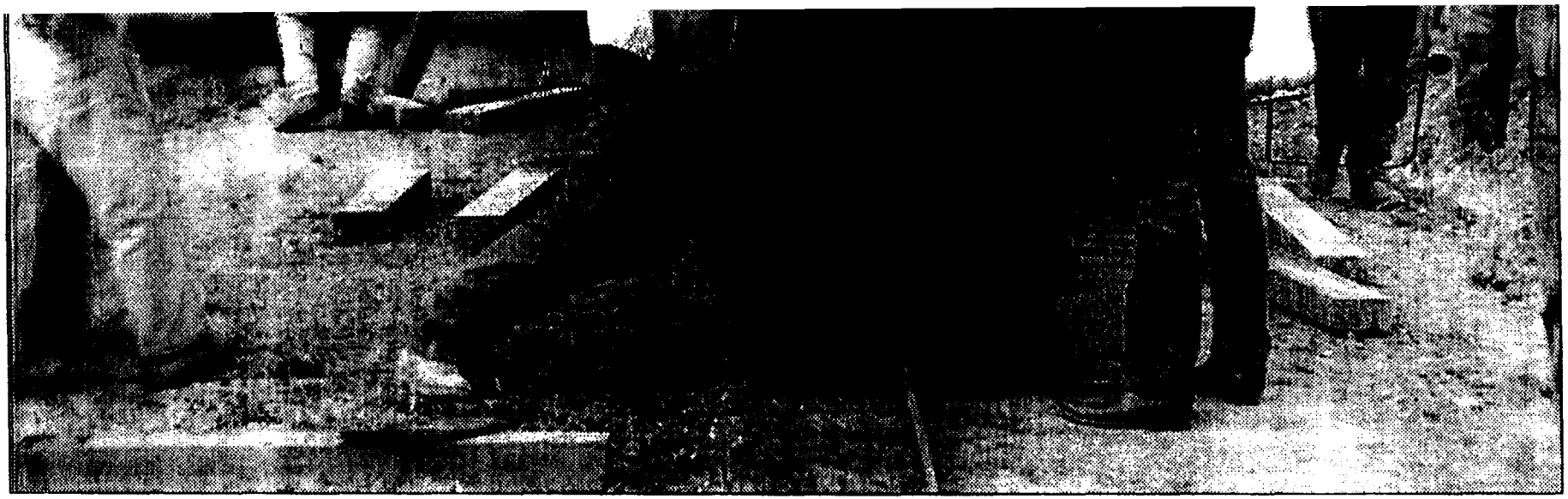

Midcon photo

Construction of a new interstate pipeline proceeds in Kansas while MidCon Corp. plans for expansion in the Chicago area.

Natural gas pipelines meet in Chicago

Like many companies, MidCon Corp. is using Chicago as a hub for its expanding network of natural gas pipelines.

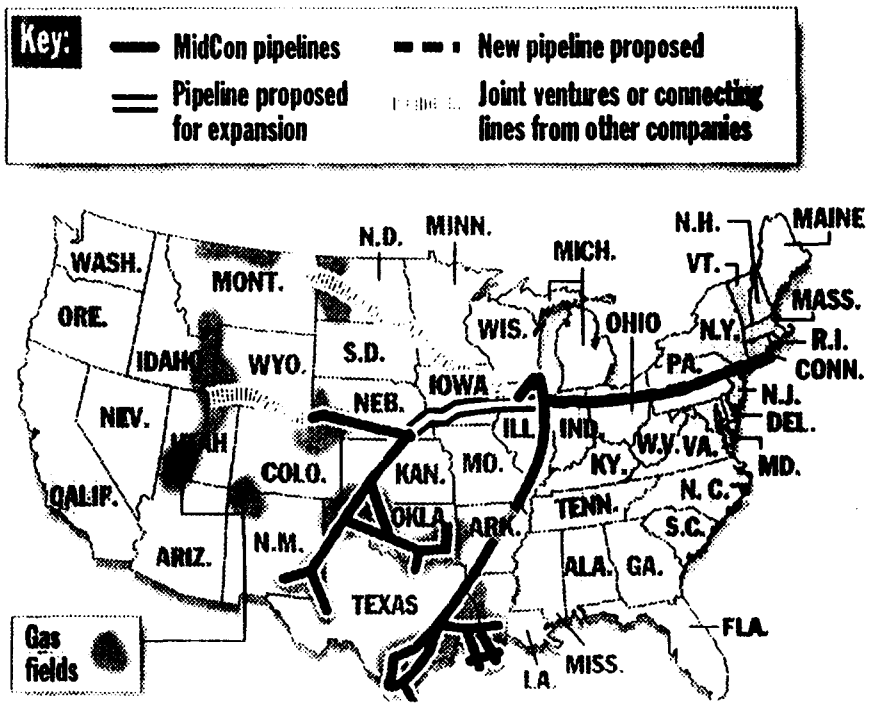

Chicago's location, industry deregulation spur pipelines

By David Young
TRIBUNE STAFF WRITER

Chicago, which over the years has been a center of the nation's shipping, railroad and airline systems, before the end of the century may become a key junction for a developing national grid of natural gas pipelines.

The additional lines could mean more plentiful supplies and cheaper gas prices for local utilities—and consumers.

Spurred by deregulation, two partnerships and one of the nation's biggest pipeline build three separate transmission lines to Chicago from gas fields in the United States and Canada.

The pipeline operator, Lombard-based MidCon Corp., is also planning a $1 billion line from Chicago to New York, angling to tap into a market that has big potential for growth.

Industry officials claim the lines would benefit cumers because Chicago would be awash in low-priced gas from the West and Canada that now sells for about half the price of gas being pumped from Gulf Coast fields.

Model
BorPak 1200

Specifications:

DIAMETER	1.2m (3.94 ft.)
CUTTERS	Carbide disc cutters
CUTTERHEAD RPM	14 @ 60 Hz. 12 @ 50 Hz Variable with VF-option
MAXIMUM THRUST	2300 kN (516,000 lbs.)
DRILLING TORQUE	86,400 Nm (63.500 lb.-ft.) @ 50 Hz 72,000 Nm (53,000 lb.-ft.) @ 60Hz
BORING STROKE	0.5 m (1.64 ft.)
POWER FOR ROTATION	104 kW (140 HP)
POWER, HYDRAULIC	30 kW (40 HP)

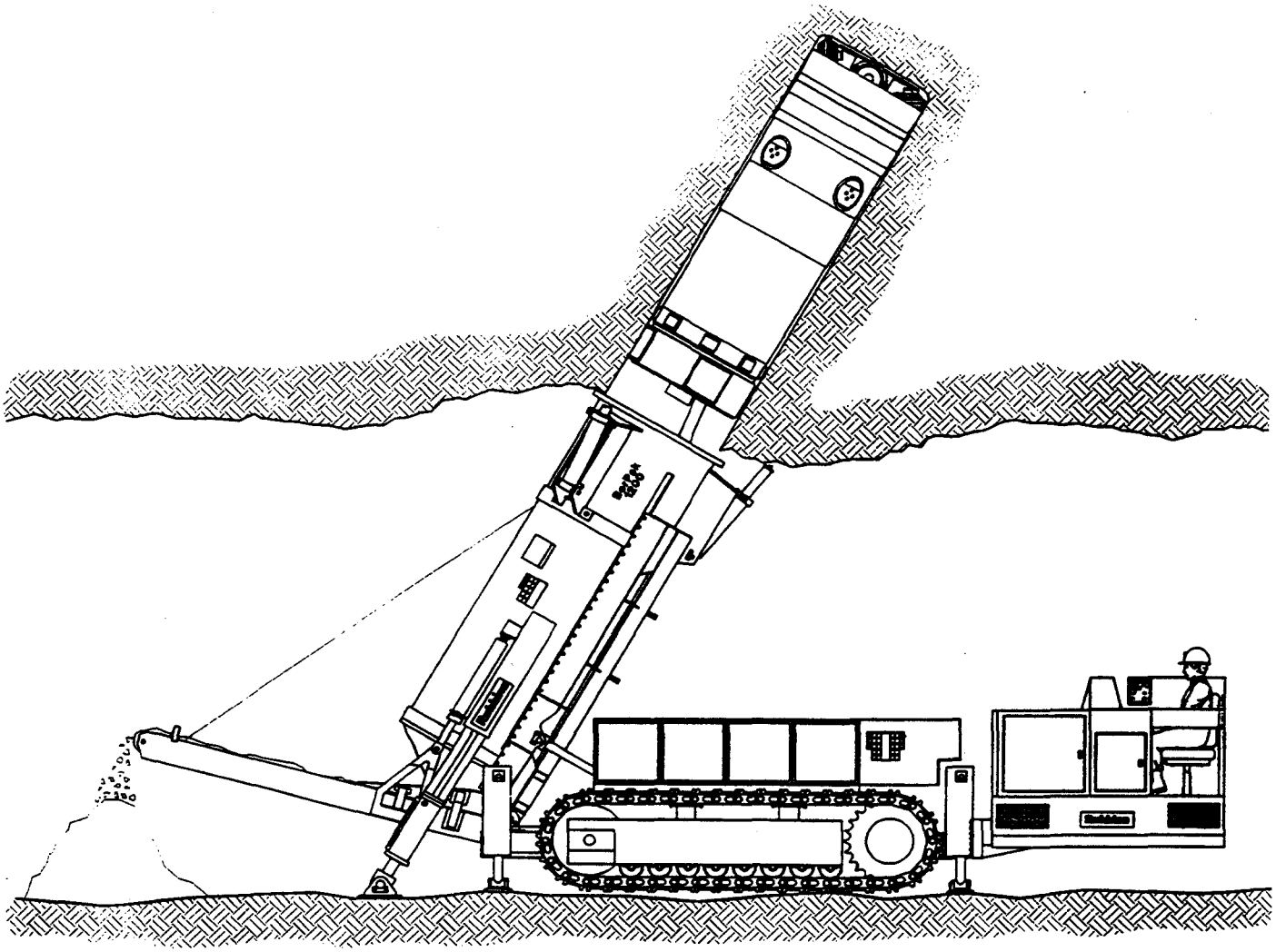

Atlas Copco

The Robbins Company
A company in the Atlas Copco Group

9851 1902 01

22445 76th Avenue South, Kent, WA 98032 U.S.A. Telephone: (206) 872-0500 Telex: 4740083 Fax (206) 872-0199

Printed in U.S.A.

S&GDT 103229 3/94 5000

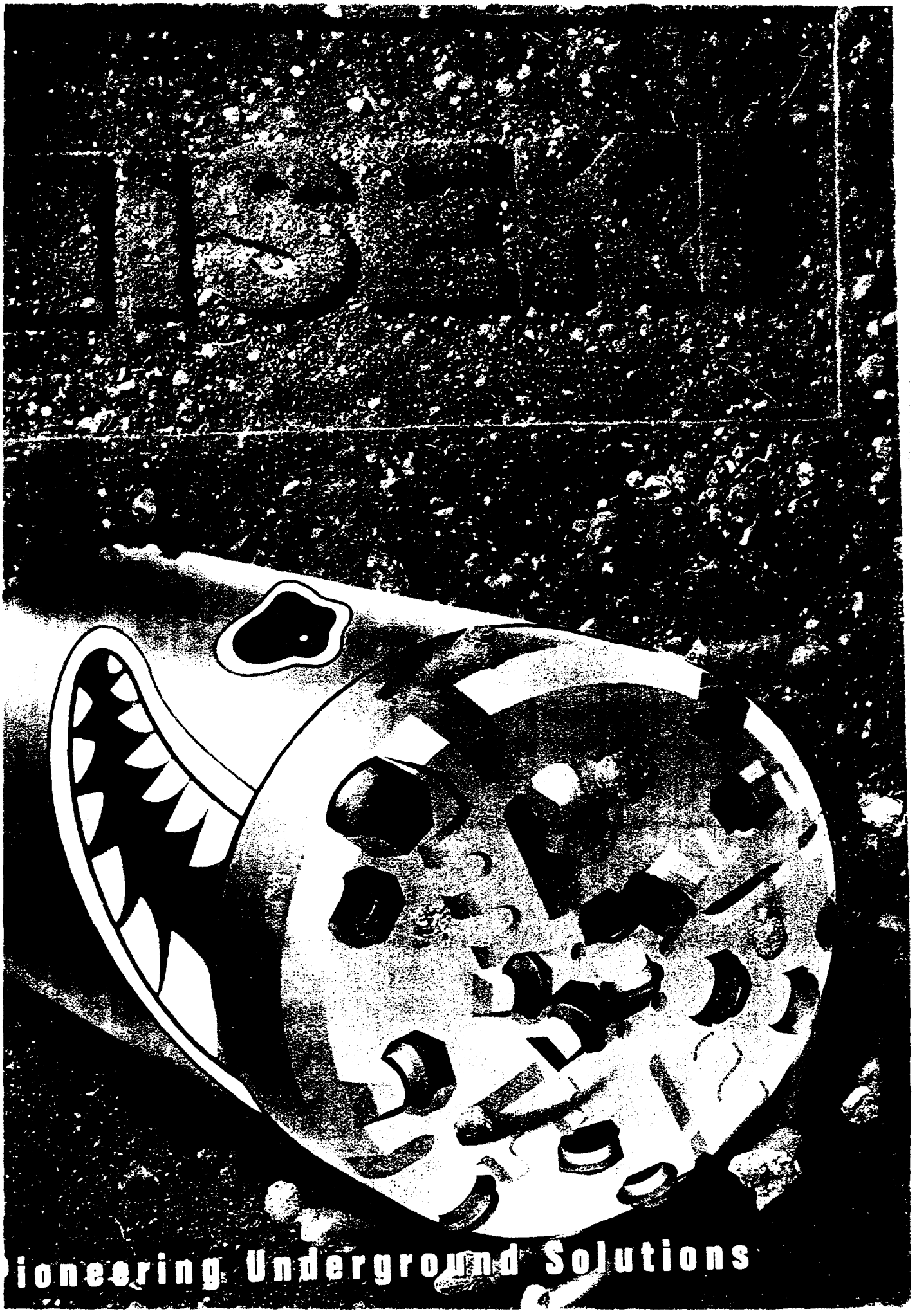
ioneering Underground Solutions

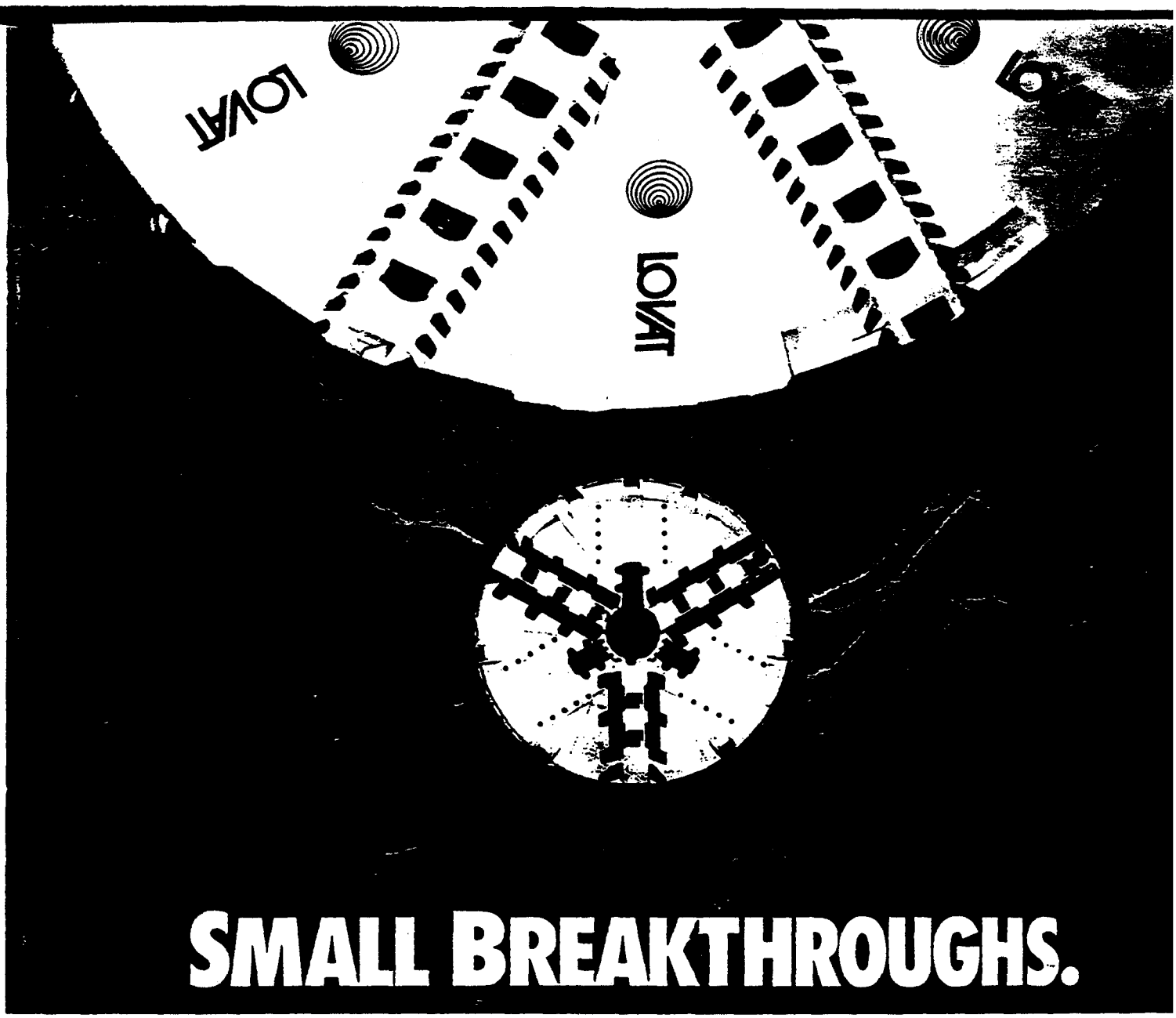

SMALL BREAKTHROUGHS.

Meeting tight deadlines is as important in small projects as in big ones. That's why Lovat builds every small diameter TBM with the same reliability and performance features found in our larger TBMs.

Our cuttinghead design and hydraulic drive system deliver rapid, uninterrupted advance through changing ground conditions — from wet sand to mixed-face. The cuttinghead is articulated for precise steering control. For fast shaft-to-shaft turnaround, our small TBMs are designed in three easy-to-transport sections, with hydraulics and electrics fully contained.

And no matter what your tunnel lining method, Lovat offers unique systems to speed lining installation — from turnkey pipejacking systems to innovative systems for rib & lagging, and concrete segments.

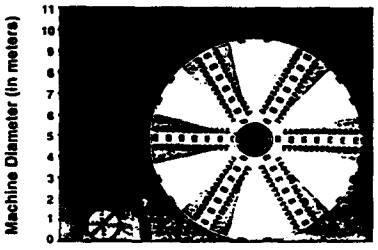

From 1.5 to 9.5 meters. Lovat sets the standard with unique performance and reliability features.

How do our smaller diameter TBMs perform in the field?

Our 2.9 m diameter ME 116 SE, for example, recently excavated and lined 418 meters of tunnel in a single five-day week.

Typical of Lovat durability, our 2.6 m diameter M 102 is still performing reliably after 26,500 meters tunnelled, seven breakthroughs, and six reconditionings.

Need more proof?

Consider that Lovat small diameter TBMs have amassed over 1.5 million feet under the toughest of tunnelling conditions in six continents around the globe.

So while the mega projects with our large TBMs may capture the limelight, our smaller machines continue to quietly set the pace.

*Circle **69** on reader service card.*

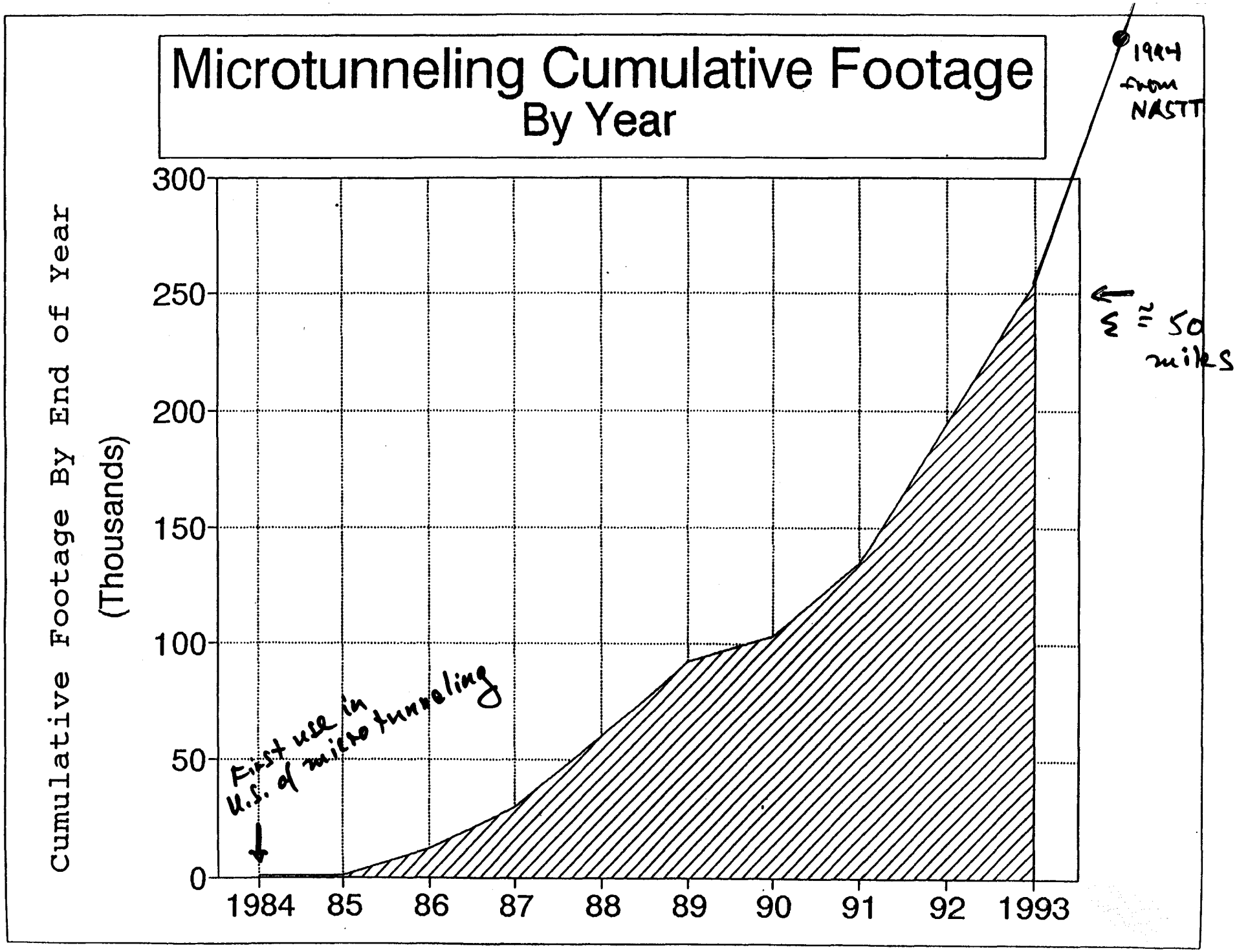
Microtunneling Cumulative Footage
By Year
Cumulative Footage By End of Year
(Thousands)
300
250
200
150
100
50
0
1984
85
86
87
88
89
90
91
92
1993
First use in U.S. of microtunneling
1994 from NASTT
≅ 50 miles

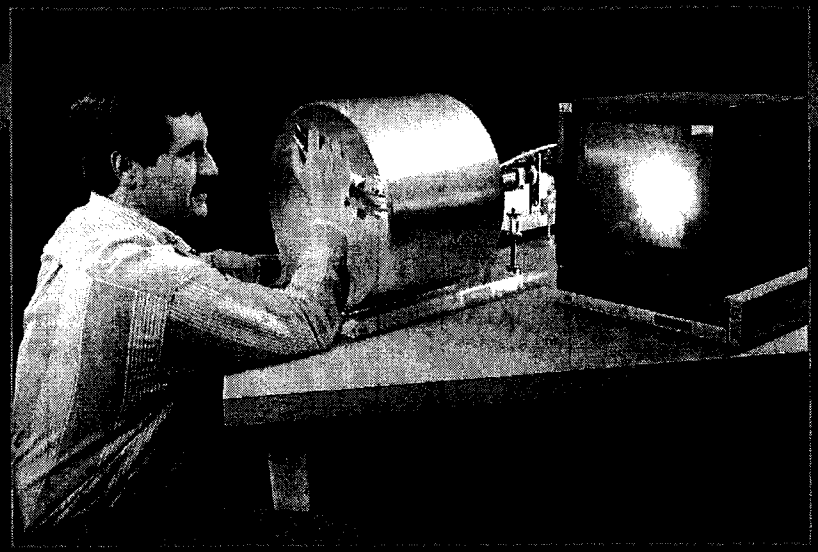

Fermilab

Visual Robotic Welding

Protective shielding removed for illustration purposes

ELECTRON CHEAPER COLLIDER

→ REPEAT LEP @ 16x Radius

→ (DIG TUNNEL FOR 40TeV Superferric Machine)

→ $\Delta E/\text{turn} \sim \frac{E^4}{R}$ ⇒ Double LEP energy w/same RF

→ L ↑↑ since D ↓

→ Requires 100 gauss magnets

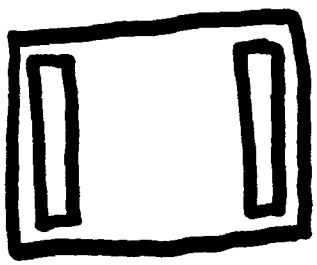

⇒ Do NLC Physics @ $\lesssim 1/3$ Cost

A 100 TeV Synchrotron/Collider Based on the Nuclotron-type Cryomagnetic System

by
A.Baldin and A. Kovalenko

Laboratory of High Energies
JINR, Dubna

A.BALDIN, A.KOVALENKO

Laboratory of High Energies, JINR, DUBNA

HOW A 100 - TeV SYNCHROTRON/COLLIDER BASED ON THE NUCLOTRON- TYPE CRYOMAGNETIC SYSTEM WOULD LOOK

- NUCLOTRON: SYSTEMS & OPERATION

- IRON-SHAPED FIELD SC-MAGNETS AT THE LHE JINR

- MAGNETICALLY ORIENTED DYSPROSIUM AND FIELD CORRECTION;

- EXTRAPOLATION FOR 100 TeV

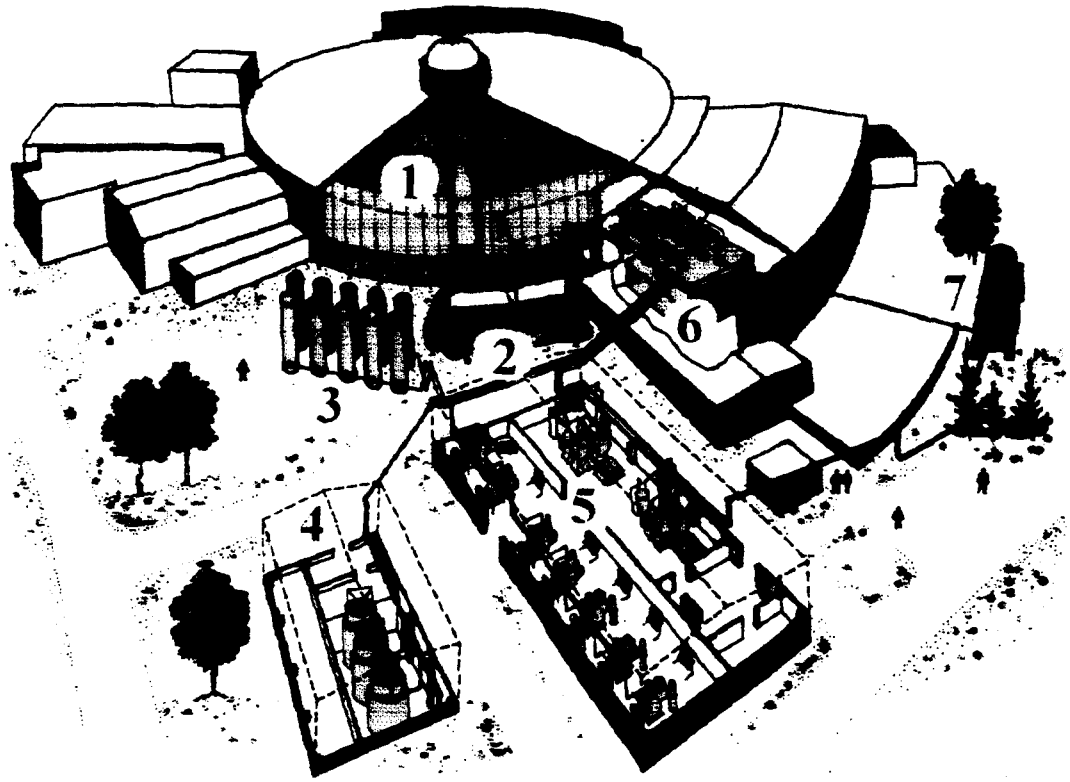

Figure 1. General view of the LHE accelerators and central liquefier station. 1 – 10 GeV Synchrophasotron, 2 – Nuclotron, 3 – vessels for gaseous helium storage, 4 – gas bags, 5 – compressors, 6 – refrigerators/liquefiers, 7 – liquid helium tank.

NUCLOTRON first SC-SYNCHROTRON BASED ON IRON-SHAPED FIELD 2T SC-MAGNETS

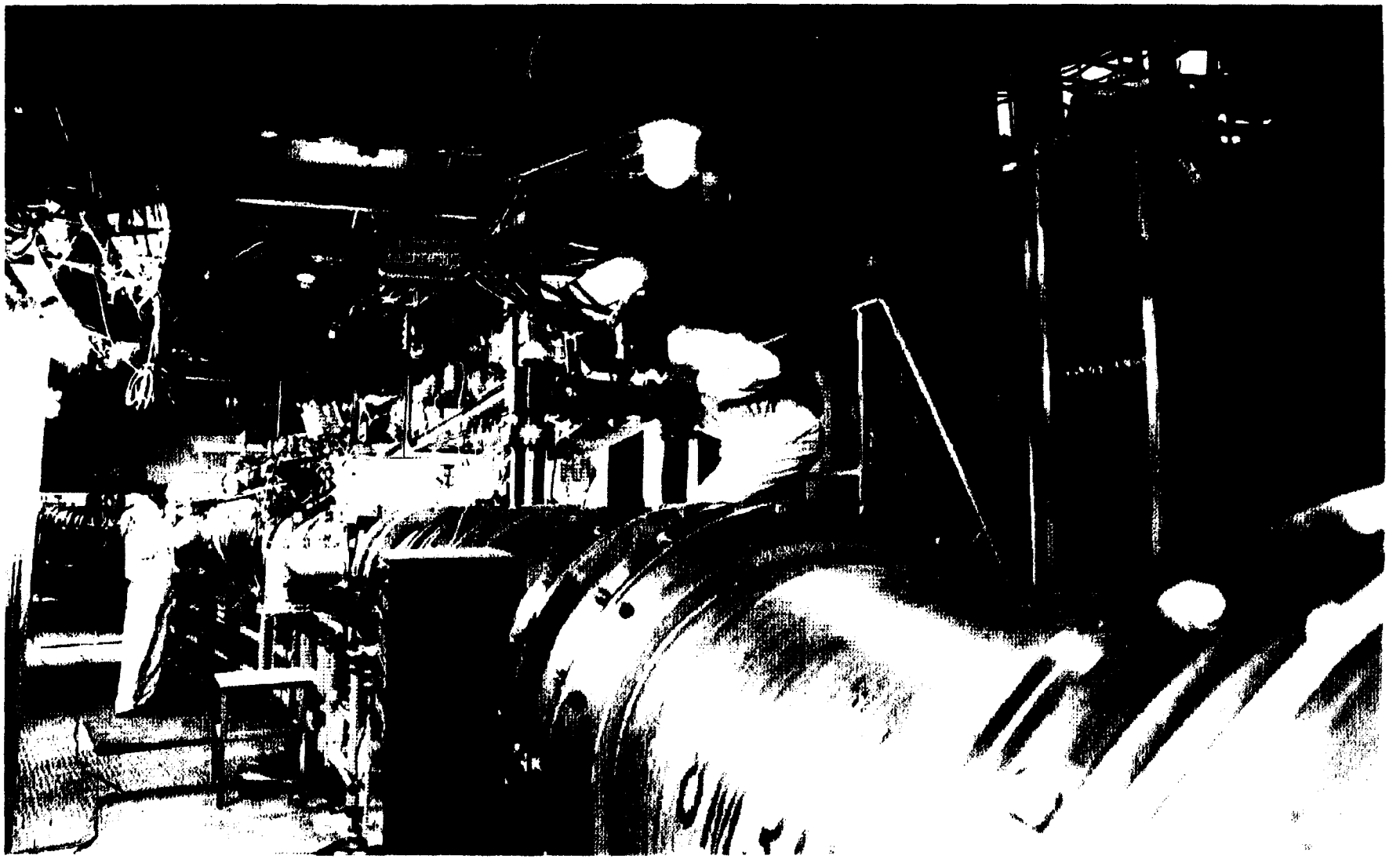

MAIN PARAMETERS
of the ACCELERATOR'S RING

1. *Maximum design energy of particles.....6 GeV/n*
2. *Perimeter.....251.5 m*
3. *Maximum magnetic field..... 2.0 T*
4. *Stored energy.....2.35 MJ*
5. *Temperature.....4.5 K*
6. *Total static heat leak.....1.75 kW*
7. *Maximum dynamic heat releases at 0.5 Hz.....2.9 kW*
8. *Repetition frequency.....up to 1 Hz*
9. *Total "cold" mass.....80 tons*
10. *Cool down time.....80 h*

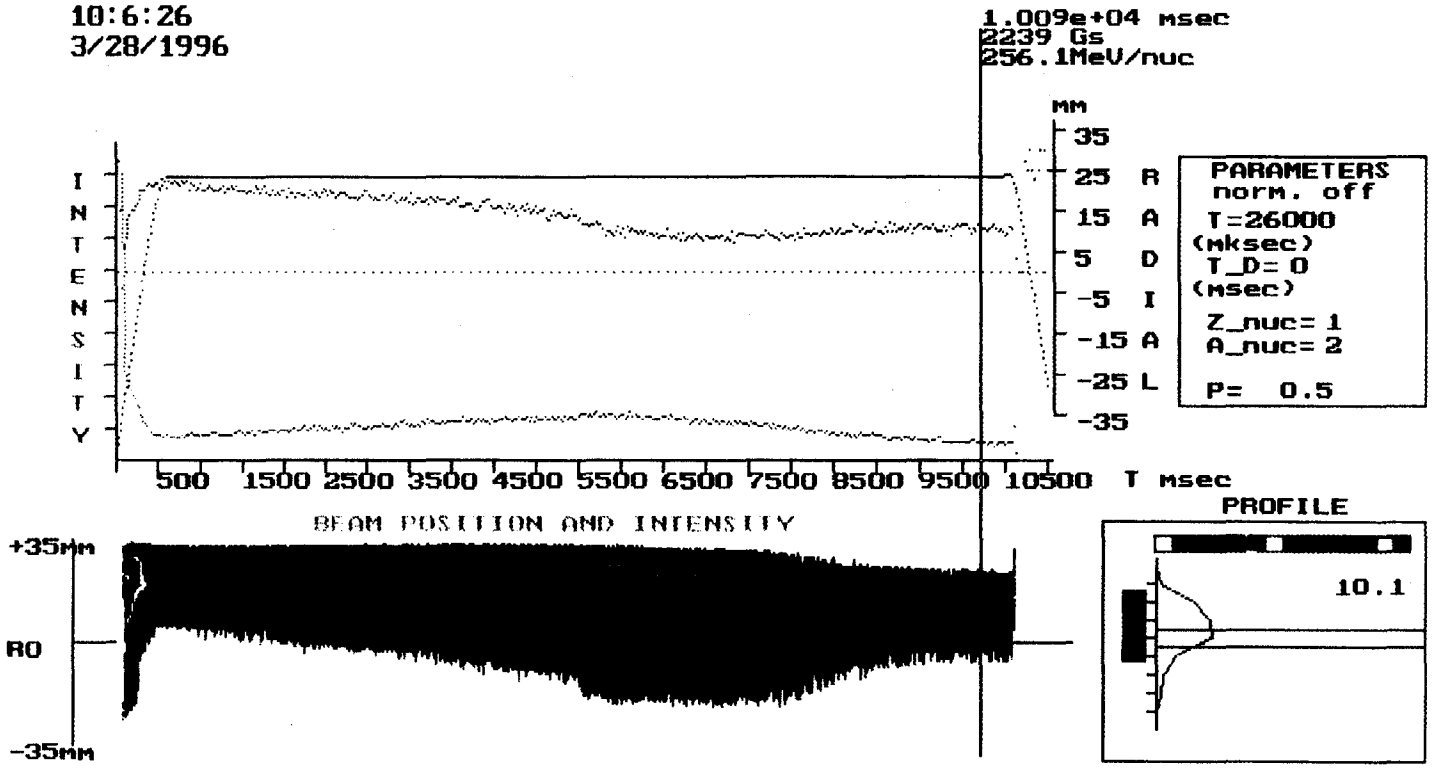
10:6:26
3/28/1996
1.009e+04 msec
2239 Gs
256.1MeV/nuc
MM
35
25 R
15 A
5 D
-5 I
-15 A
-25 L
-35
PARAMETERS
norm. off
T=26000
(mksec)
T_D= 0
(msec)
Z_nuc= 1
A_nuc= 2
P= 0.5
INTENSITY
500 1500 2500 3500 4500 5500 6500 7500 8500 9500 10500 T msec
BEAM POSITION AND INTENSITY
+35mm
RO
-35mm
PROFILE
10.1

$\dot{B} = 4\,T/c$, $B_m = 2T$ at $I \simeq 6.5\,kA$

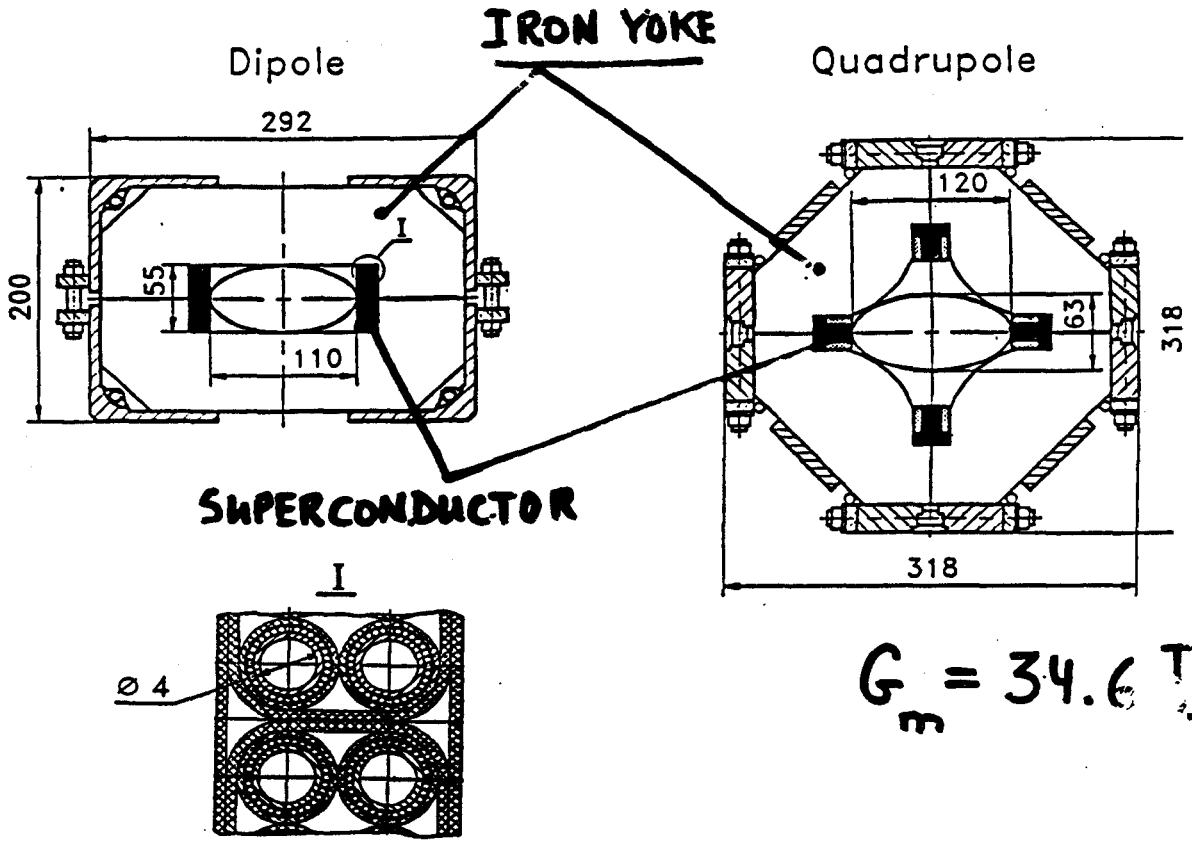

$G_m = 34.6\,T_m$

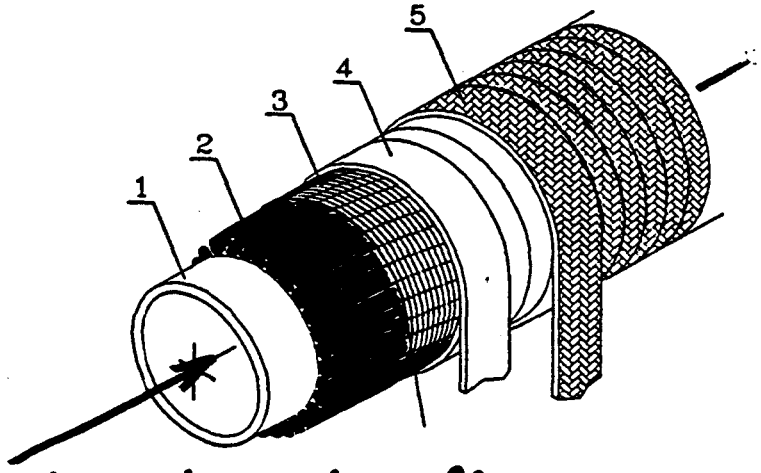

- SUPERPERIODS - 8
- CELL - FODO
- DIPOLES - 96
- QUADRUP. - 64
- CORRECTORS - 32
- β-TUNE $Q_x \approx Q_z = 6.75$ two phase He-flow
- ACCEPTANCE: $A_x \approx 40\pi$ mm·mrad
  $A_z = 45\pi$ mm·mrad
- MOMENTUM SPREAD - $\lesssim 4 \cdot 10^{-3}$
- CIRCUMFERENCE - 251.5 m.

MAIN CHARACTERISTICS of the MAGNETS

	DIPOLE	*QUADRUPOLE*	
1. Number of magnets	*96*	*64*	
2. Mass	*500*	*200*	(kg)
3. Aperture	*110x55*	*120x63*	(mm)
4. Physical length	*1462*	*450*	(mm)
5. Number of turns in the winding	*2x8*	*4x5*	
6. Length of SC cable in the winding	*62*	*24*	(m)
7. Stored energy	*19.8*	*6.9*	(kJ)
8. Dynamic heat releases at f=0.5 Hz	*21*	*12*	(W)
9. Dynamic heat releases at f=1.0 Hz	*53*	*30*	(W)
10. Static heat flow	*6.6*	*5.2*	(W)
11. Induction at a nominal current of 6 kA	*1.98 (T)*		
12. Gradient at a nominal current of 5.6 kA		*33.4*	(T/m)

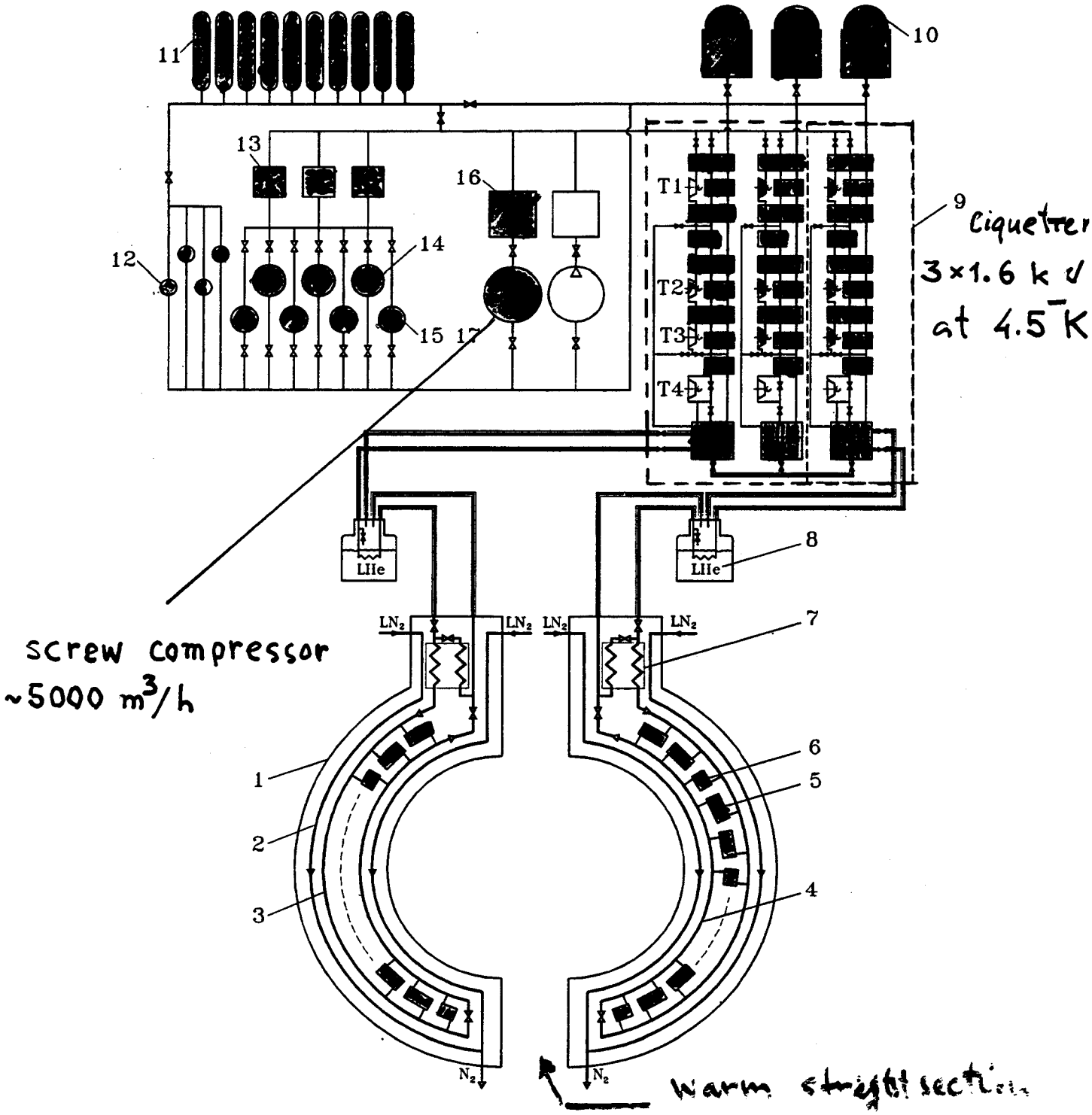

Figure 4. General scheme of the Nuclotron cryogenics. 1 – vacuum shell; 2 – heat shield; 3 – supply header; 4 – return header; 5 – dipole magnet; 6 – quadrupole magnet; 7 – subcooler; 8 – separator; 9 – refrigerator; 10 – gas bag; 11 – storage vessel; 12, 14, 15, 17 – compressors; 13, 16 – purifiers.

FIRST IRON-SHAPED FILED SC-DIPOLES

for SPIN & NUCLOTRON

I.SHELAEV
JINR P8-11700
DUBNA,1978

A.SMIRNOV
JINR P8-12786
DUBNA,1979

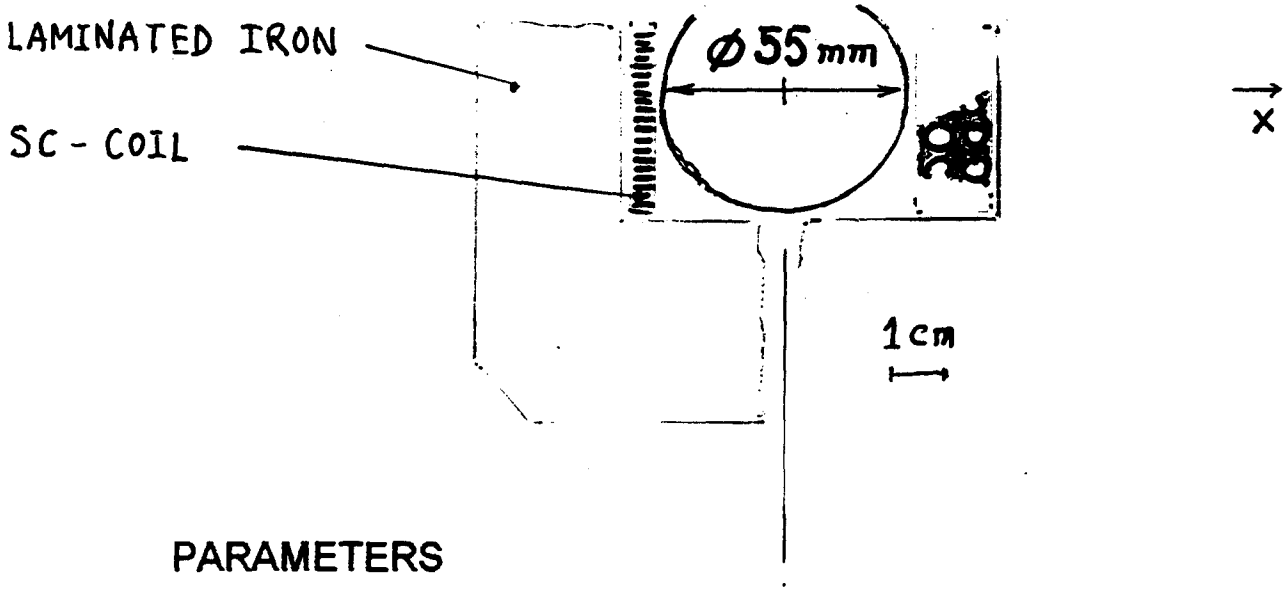

PARAMETERS

PEAK FIELD,	T	2.5	2.37
CRITICAL CURRENT,	A	2600	7380
STORED ENERGY,	kJ/m	10.0	12.5
IRON:			
- CROSS SECTION,	mm	130x140	180x150
- WINDOW,	mm	67x55	91x 55
- WEIGHT,	t/m	0,091	0,167
WINDING:			
- NUMBER OF TURNS		48	16
- INDUCTANCE,	mH/m	3.5	0,45
- SC/CU RATIO in WIRE		1.56	1.39
- SC WIRE LENGHT,	m/m	1620	1512
- AVERAGED CURRENT DENSITY,	kA/cm^2	37,8	12,4

FIRST IRON-SHAPED FILED SC-DIPOLES

for SPIN & NUCLOTRON

I.SHELAEV
JINR P8-11700
DUBNA, 1978

A.SMIRNOV
JINR P8-12786
DUBNA, 1979

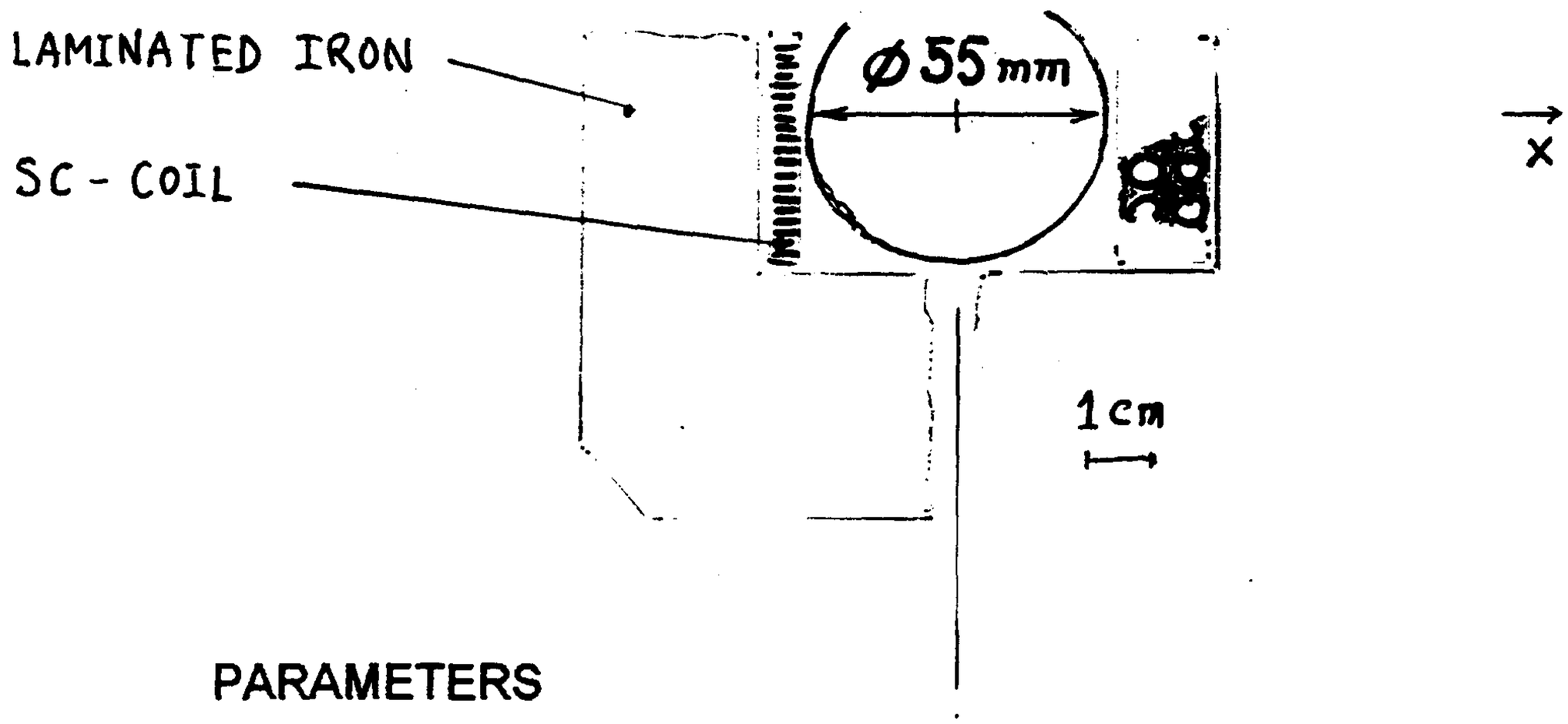

PARAMETERS

PEAK FIELD,	T	2.5	2.37
CRITICAL CURRENT,	A	2600	7380
STORED ENERGY,	kJ/m	10.0	12.5
IRON:			
- CROSS SECTION,	mm	130x140	180x150
- WINDOW,	mm	67x55	91x 55
- WEIGHT,	t/m	0,091	0,167
WINDING:			
- NUMBER OF TURNS		48	16
- INDUCTANCE,	mH/m	3.5	0,45
- SC/CU RATIO in WIRE		1.56	1.39
- SC WIRE LENGHT,	m/m	1620	1512
- AVERAGED CURRENT DENSITY,	kA/cm^2	37,8	12,4

FRAGMENT OF THE SUPERNUCLOTRON TUNNEL

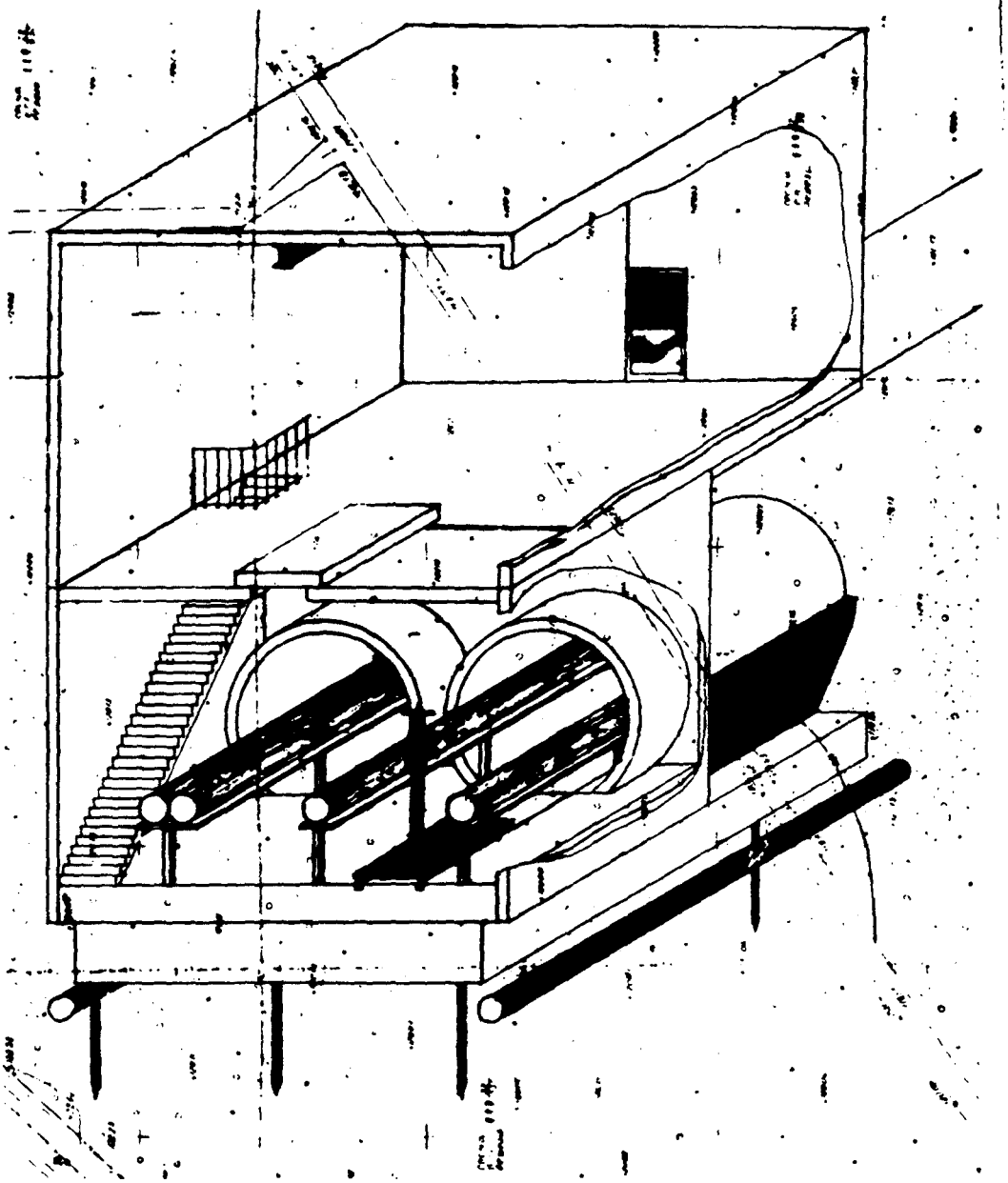

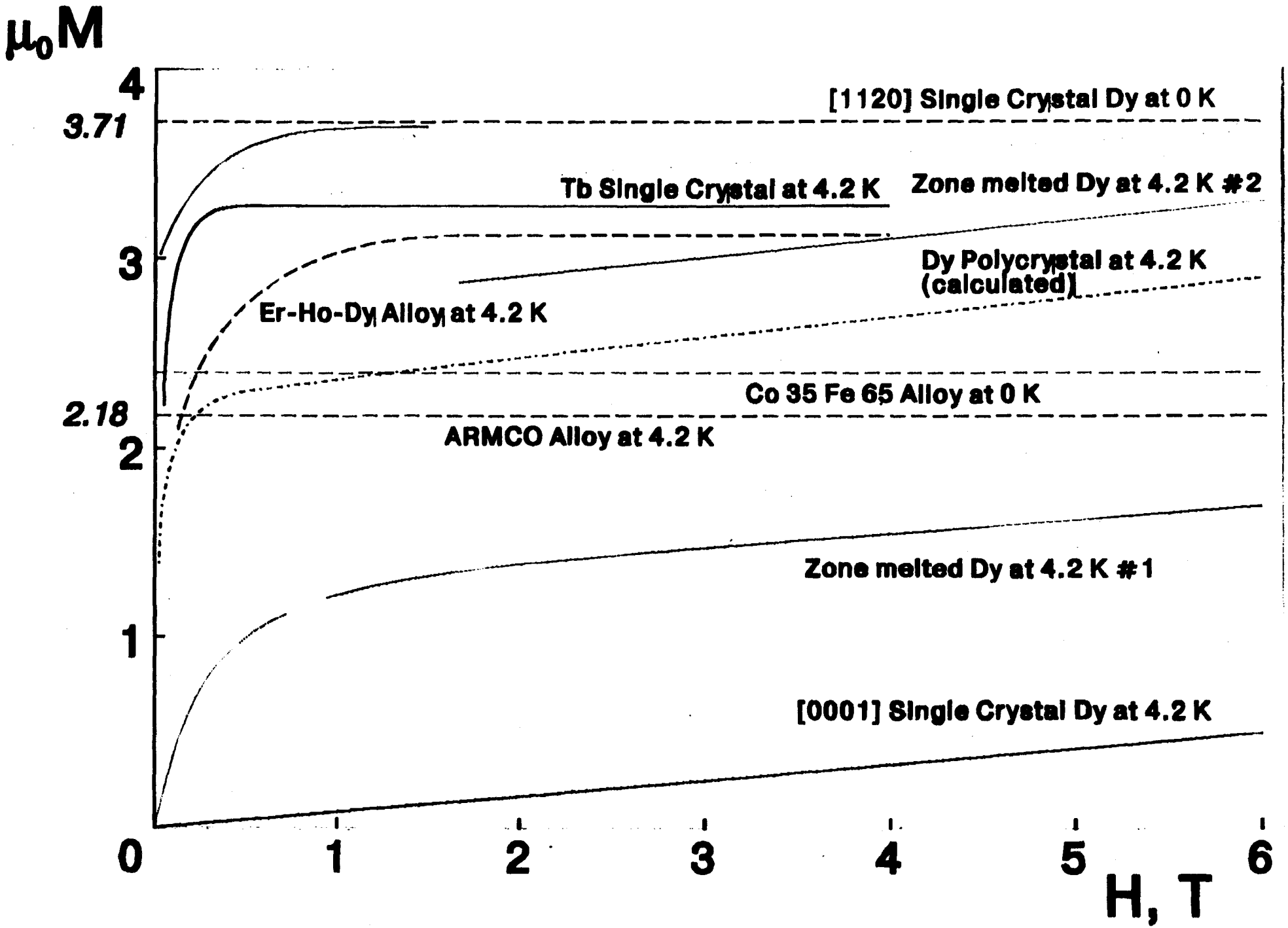
$\mu_0 M$
4
3.71
3
2.18
2
1
0
1
2
3
4
5
6
H, T
[1120] Single Crystal Dy at 0 K
Tb Single Crystal at 4.2 K
Zone melted Dy at 4.2 K #2
Dy Polycrystal at 4.2 K (calculated)
Er-Ho-Dy Alloy at 4.2 K
Co 35 Fe 65 Alloy at 0 K
ARMCO Alloy at 4.2 K
Zone melted Dy at 4.2 K #1
[0001] Single Crystal Dy at 4.2 K

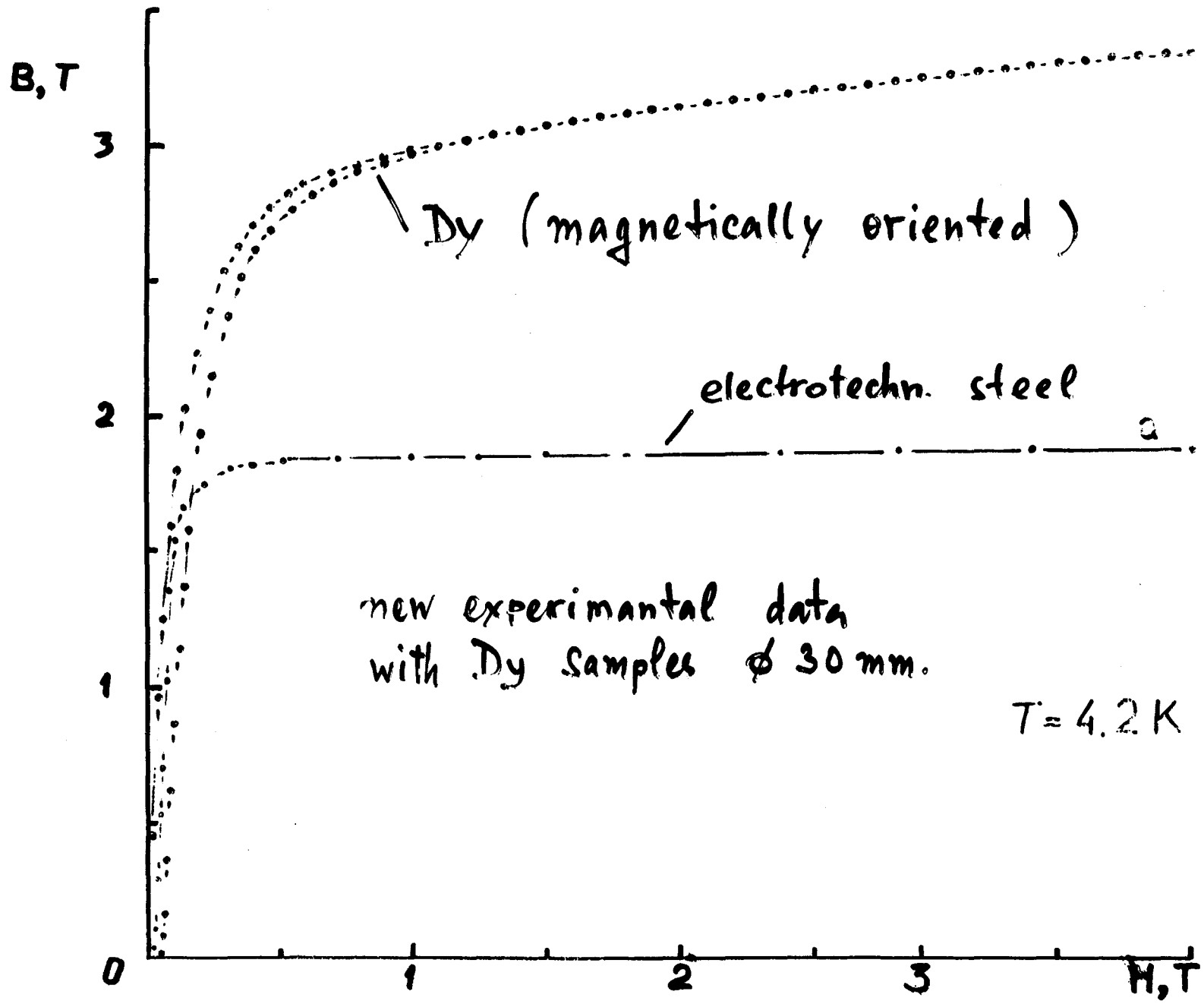
B, T
3
2
1
0
1
2
3
H, T
Dy (magnetically oriented)
electrotechn. steel
new experimantal data
with Dy samples ϕ 30 mm.
T = 4.2 K

FIELD CORRECTION WITH DYSPROSIUM

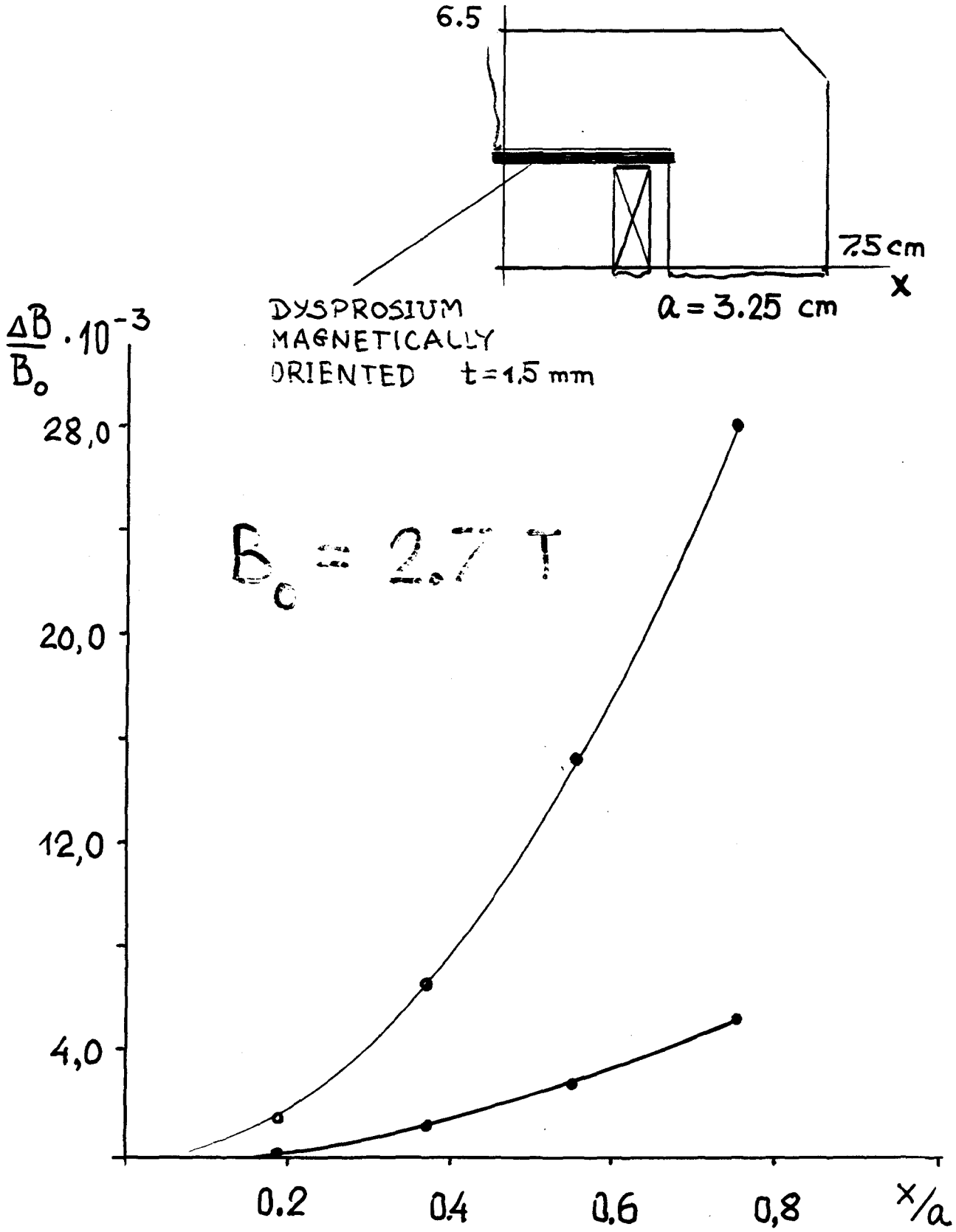

ESTIMATE OF COOLING PARAMETERS

• WEIGHT OF COLD IRON,	kton	170
• CIRCUMFERENCE,	m	10^6
• HEAT LOSSES,	W/m	0,5
• REFRIGERATOR CAPACITY,	kW	5 at 4.5 K
• NUMBER OF REFRIGERATORS		100
• LENGTH OF HELIUM HEADERS FOR THE REFRIGERATOR,	km	2×5
• LENGTH OF MAGNETS, CONNECTED IN SERIES,	m	50
• NUMBER OF THE GROUPS, CONNECTED IN PARALLEL		100
• HELIUM HEADERS DIAMETERS,	mm	45/65
• TOTAL REFRIG. CAPACITY,	kW	500
• ELECTRIC POWER	MW	125

COOLANT: TWO-PHASE HELIUM,
T = 4.5 K

TWIN APERTURE 2-2.5T DIPOLE

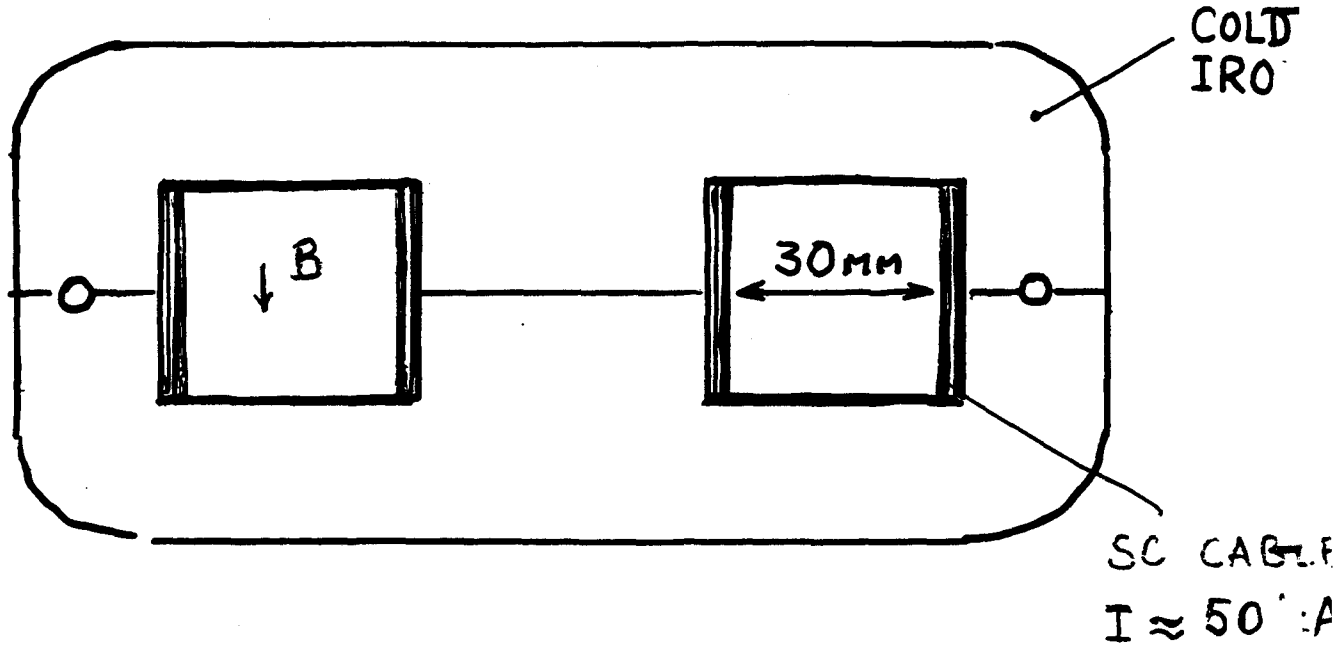

- COLD MASS ~70 kg/m
- FIELD AMPLITUDE 2-2.5 T
- STORED ENERGY <3 kJ/m
- INDUCTANCE ~2.5 μH/m
- NUMBER OF TURNS 1 PER APERTURE
- STATIC HEAT LOSSES ~0.2 W/m

- WE CONSIDER LOW-COST LOW-FIELD IRON DOMINATED SUPERCONDUCTING MINIATURE MAGNETS

  AS THE ONLY FEASIBLE CONCEPT FOR SUPERHIGH ENERGY ACCELERATO OF THE NEXT GENERATION

- WE HOPE OUR EXPERIENCE OF THE NUCLOTRON OPERATION IS USEFUL ALSO FOR THE DESIGNERS OF THE BIGGEST ACCELERATOR

Cryogenics
Baseline Parameters

by
Peter Mazur

Fermilab

Cryogenics Baseline Parameters

Peter O. Mazur
Fermilab
May 3, 1996

In the low cost hadron collider presently envisaged, the cryogenic system must:

- Maintain the 60kA magnet drive conductor in a superconducting state during operation;
- Maintain the 60kA return current bus in a superconducting state during operation;
- Cool the power leads which carry the current from the superconductor to the room temperature bus;
- Provide for cool down, warm up, and quench recovery.

Key parameters have been identified and the basic layout of the cryogenic system proposed. The cryogenic system required must be compact to be consistent with a small tunnel.

We will consider the general scheme for helium refrigeration of NbTi superconductors, then briefly discuss the improvements that might be possible if high Tc superconductors were to be available.

The machine can be segmented to provide two cryogenic loops fed from each of four tunnel access points. The tunnel length of each loop is 40 km, for a machine circumference of 320 km.

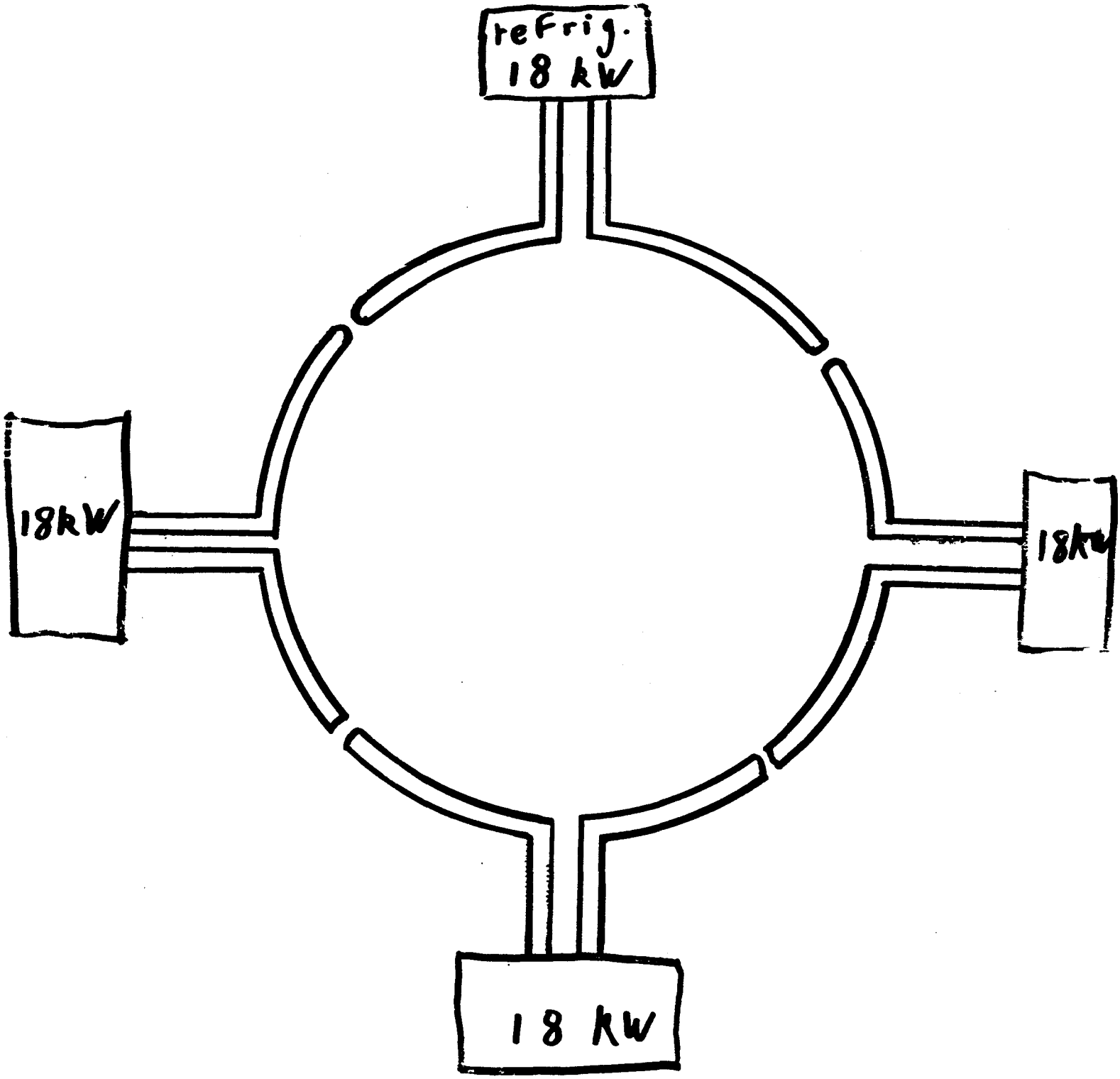

Each of the eight cryo loops works as shown below.

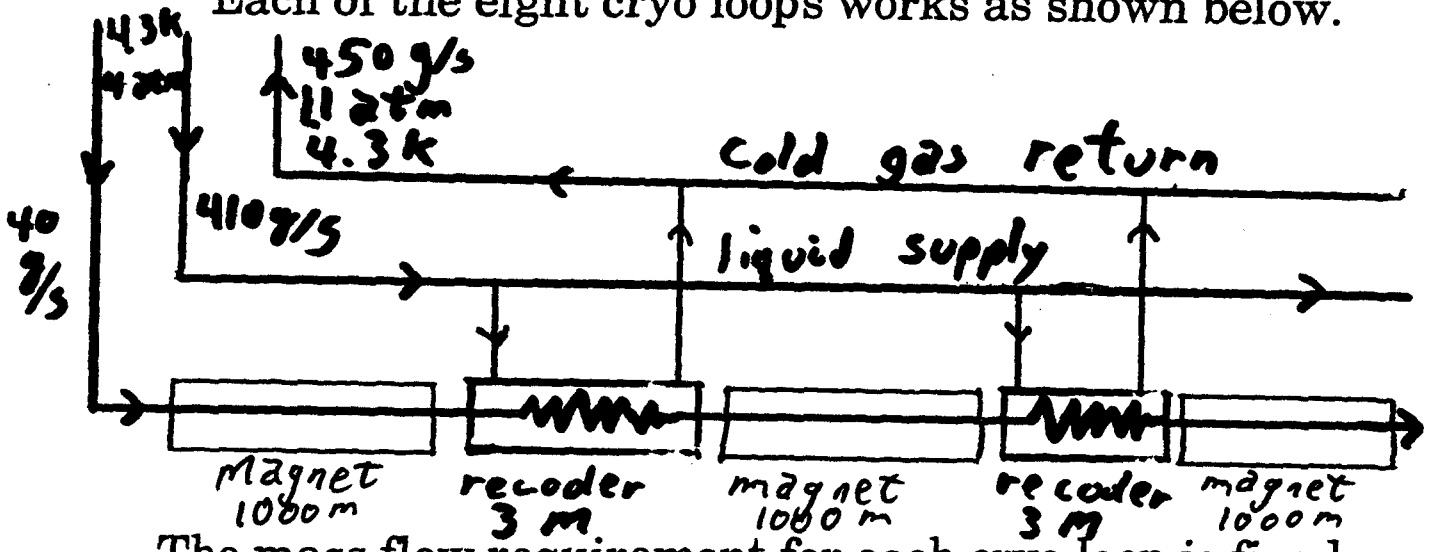

The mass flow requirement for each cryo loop is fixed by the heat leak and the latent heat, about 18j/g. Assume a heat leak (for now) of 0.2w/m for a total of 8000w per loop. The required mass flow is 450g/s.

The split of helium flow between the small magnet drive conductor and the larger main helium supply line determines the distance between recoolers and hence the maximum length of a magnet "module". Flow is limited by the diameter (2.1cm) of the drive conductor pipe to about 40g/s.

A heat leak of 50w/km will warm the helium by .31K/km, so a distance of order one km is reasonable. The conductor temperature is therefore 4.3K at the start of each magnet module and 4.6K at the end. (However, we need to provide enough reserve in the conductor for a failed recooler, so an operating temperature of at least 4.9K should be allowed for.)

The tunnel will contain three lines for the cryogenic system: the drive conductor line in the magnet, the main transfer line, and a warm gas return line which consists of a pipe of about 10cm diameter. The warm gas return line is used for cooldown and quench recovery.

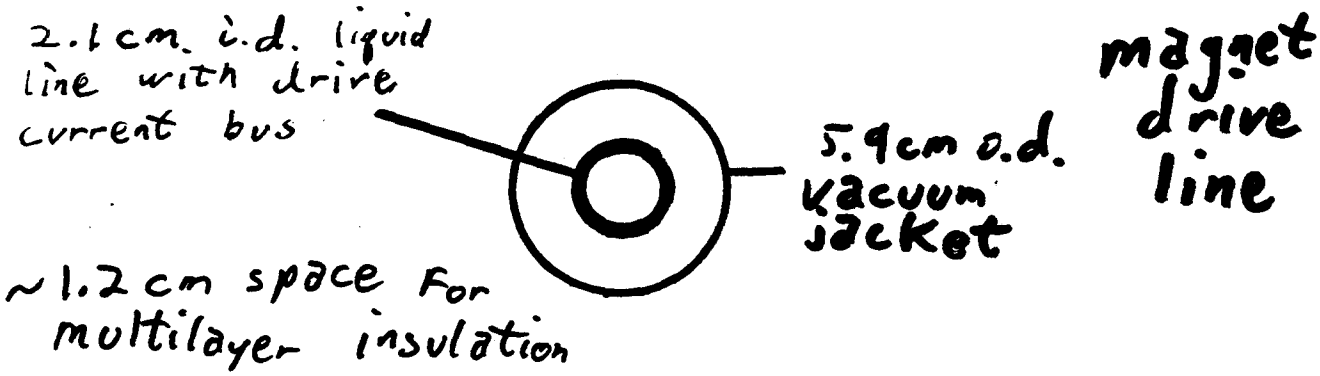

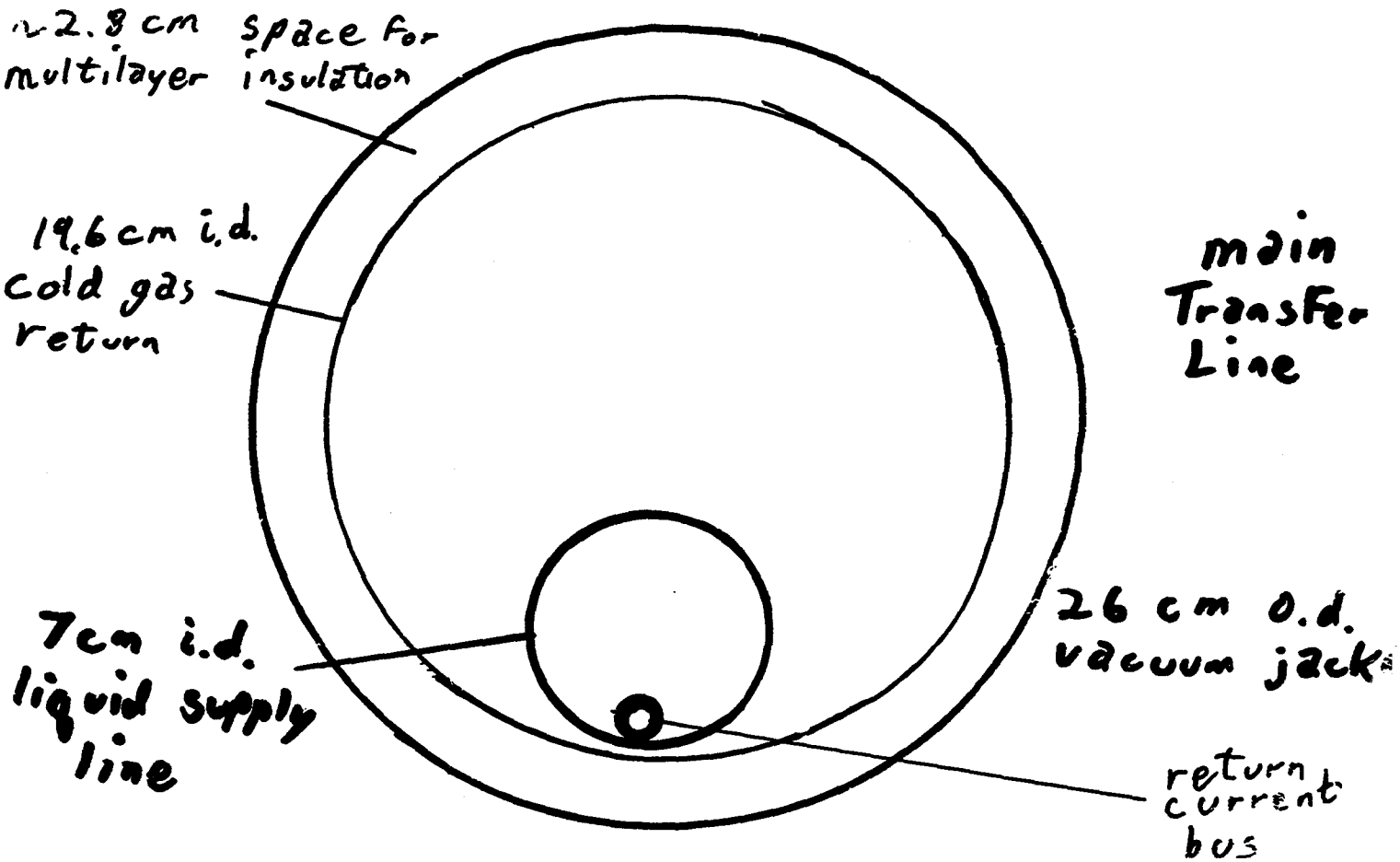

In the examples shown, the pressure drop in the liquid lines is about 200kPa, and in the cold gas return line about 20kPa. That was the basis for the selection of these line sizes (using formulas worked out by M. McAshan.) The line diameters seem reasonable from a cost and construction viewpoint, and the refrigerators, at 18kW each, are about the optimum size for the economies of scale.

Heat Leak Estimates

For the magnet drive conductor the insulation area is about .135m^2/m. For a heat leak through the multilayer insulation (MLI) system of 0.3w/m^2, a heat leak of 0.04W/m through the MLI plus 0.1W/m through the supports is within reach.

For the main cryo transfer line the insulation area is 0.68m^2/m, but more space is available for greater insulation thickness, so a lower heat flux of 0.2w/m^2 through the MLI is assumed and this gives a heat load of 0.14W/m plus 0.01W through the supports for a total of .15W/m. Our assumption of 0.2W/m is within reach.

(MLI heat flux values in these ranges have been published by several authors. The challenge will be to achieve this on the large scale required.)

Summary:
Cryogenic Parameters for the Helium Case

Cryoloops: Eight, fed from four refrigerators of about 18kW each through four tunnel access penetrations.

Heat load: 0.2W/m

Drive conductor supply: 40g/s, 400kPa, 4.3K

Total supply per loop: 450g/s, 400kPa, 4.3K

Cryogenic equipment in tunnel:

Drive conductor	2.1cm i.d. flow passage 5.9cm o.d. vacuum jacket
Main transfer line	7cm i.d. supply line, containing current return bus; concentric with 19.6cm i.d. cold gas return line; 26cm o.d. vacuum jacket.

Warm gas return line, approx. 10cm i.d.
Recooler module every kilometer
Conductor temperature : 4.3-4.9K with one recooler out

Helium inventory in tunnel: 2.4×10^6 liters

Some Remaining Challenges

- The cryogenic connections and remote assembly.
- Thermal expansion of the cold components.
- Electrical insulation of the magnet drive conductor.
- Controls and instrumentation: We require a minimum number of devices (valves, sensors, etc.) to reduce cost and complexity, and we require the ability to operate with failures.

The Recooler

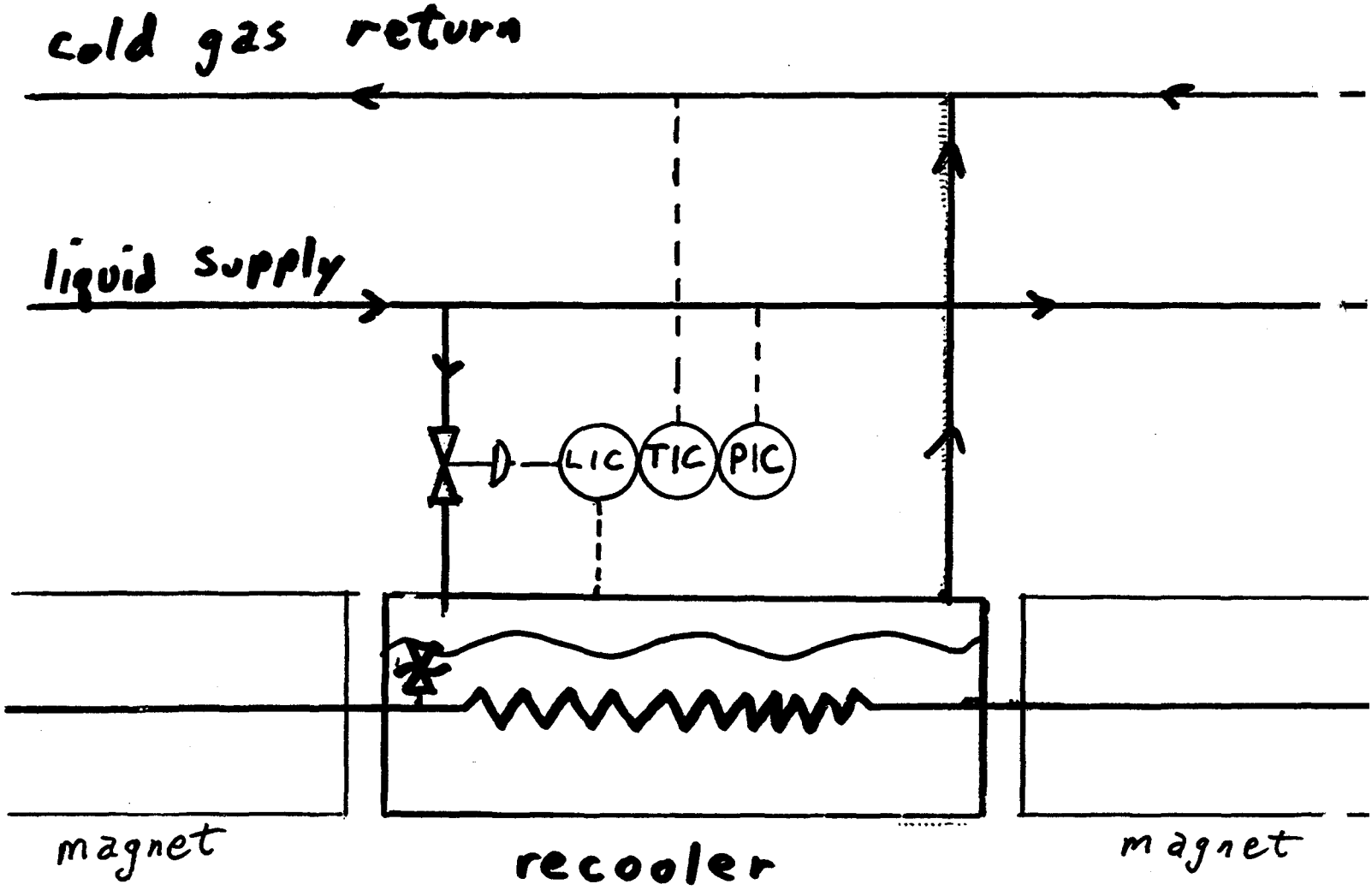

The Hydrogen Option

If high Tc superconductors become available with suitable properties at acceptable costs, it may be possible to use hydrogen refrigeration. The hydrogen refrigerator is likely to be smaller, less expensive, and to have lower operating costs than the helium refrigerator. However, hydrogen has a latent heat of 450j/g, 22 times that of helium. Consequently, the flow rates required for the same heat leak are smaller and the pipe sizes required in the main transfer line in the tunnel are considerably smaller resulting in substantial cost reductions. (A liquid nitrogen temperature superconductor would be even better.)

	Helium	Hydrogen
Liquid line radius, cm	3.44	1.12
Gas line radius, cm	8.53	3.67

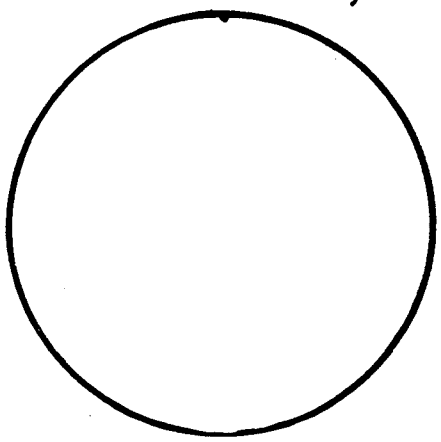

Helium cold gas line

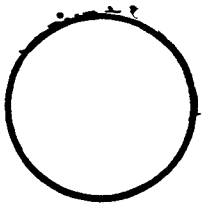

Hydrogen cold gas line

Challenges and Opportunities for the use of High Temperature Superconductors for Particle Physics

by
David Larbalestier

University of Wisconsin

Superconductor choices for new accelerator magnets

David Larbalestier*

Applied Superconductivity Center

University of Wisconsin - Madison

*LTS collaborators: Alex Gurevich, Robert Heussner, Erik Kadyrov, Peter Lee, Michael Naus, Alex Squitieri

**HTS collaborators: Wire Development Group (ASC, ANL, LANL, ORNL, UW-ASC)

Superconductor Choices

- Low Temperature Superconductors (LTS)
  - » Niobium Titanium
    - – Conventionally processed material
    - – Artificial Pinning Center composites (APC)
  - » Niobium Tin (Nb_3Sn)
- High Temperature Superconductors (HTS)
  - » Bi-Sr-Ca-Cu-O (BSCCO-2212 and -2223)
  - » Y-Ba-Ca-Cu-O (Y-123)

LTS Issues and Characteristics

- Nb-Ti and Nb_3Sn conductors are available now
  - » APC still experimental
  - » strong recent development of Nb_3Sn for ITER
- Outstanding issues to be understood:
  - » what really optimizes flux pinning?
  - » how does the proximity effect control H_{c2}?
  - » APC materials can have better properties and can answer these questions

LTS conductors

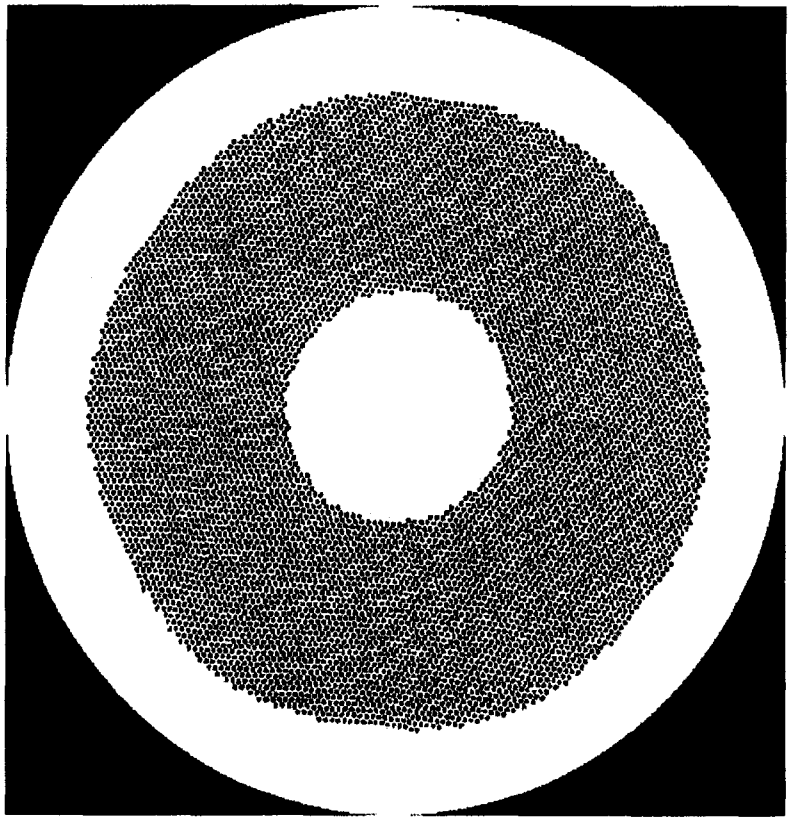

Typical SSC Nb-47wt.%Ti strand (OST manufacture).

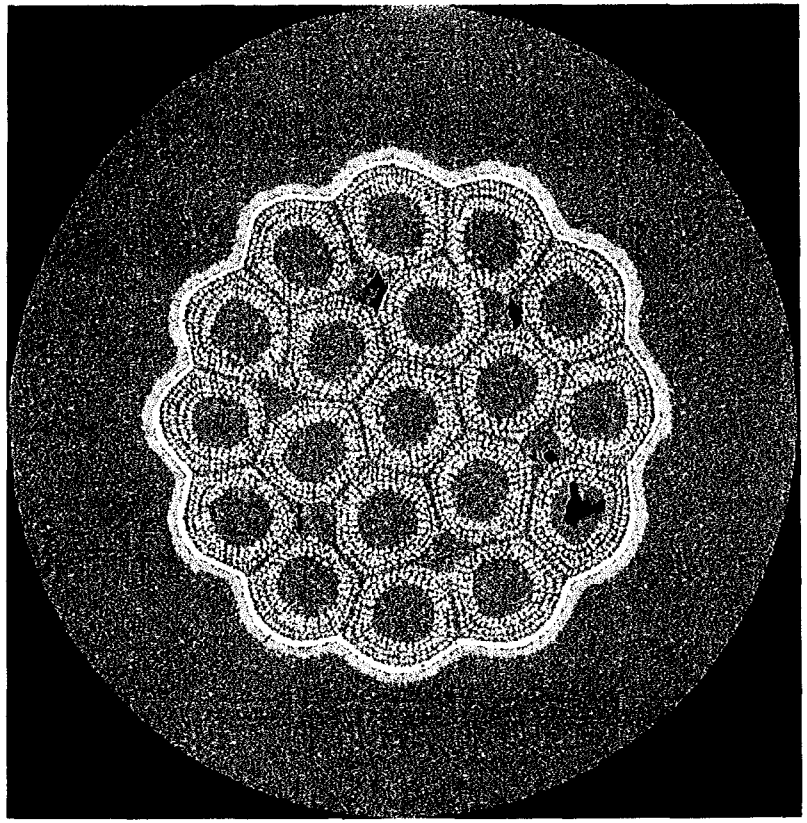

Typical reacted ITER Nb_3Sn strand (IGC manufacture).

Recent Nb-Ti APC results

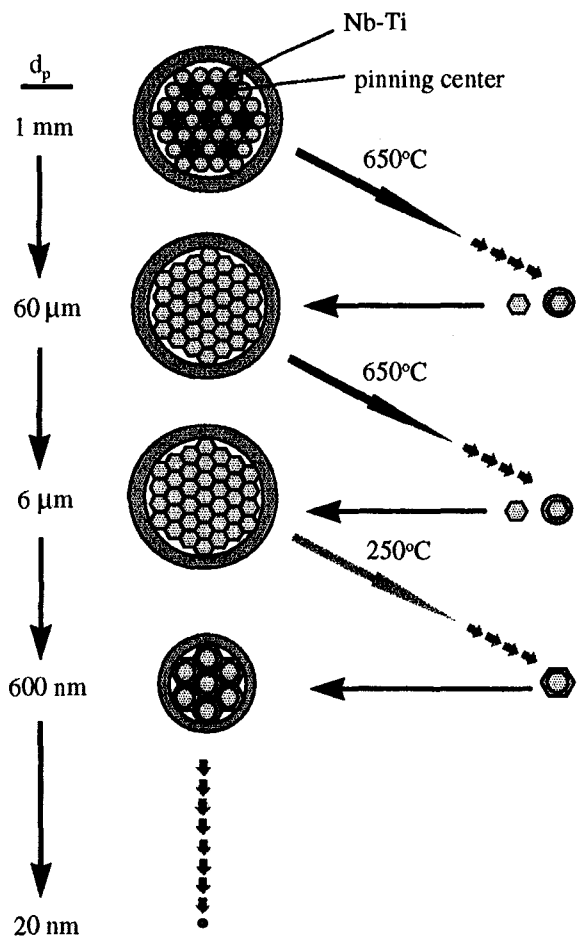

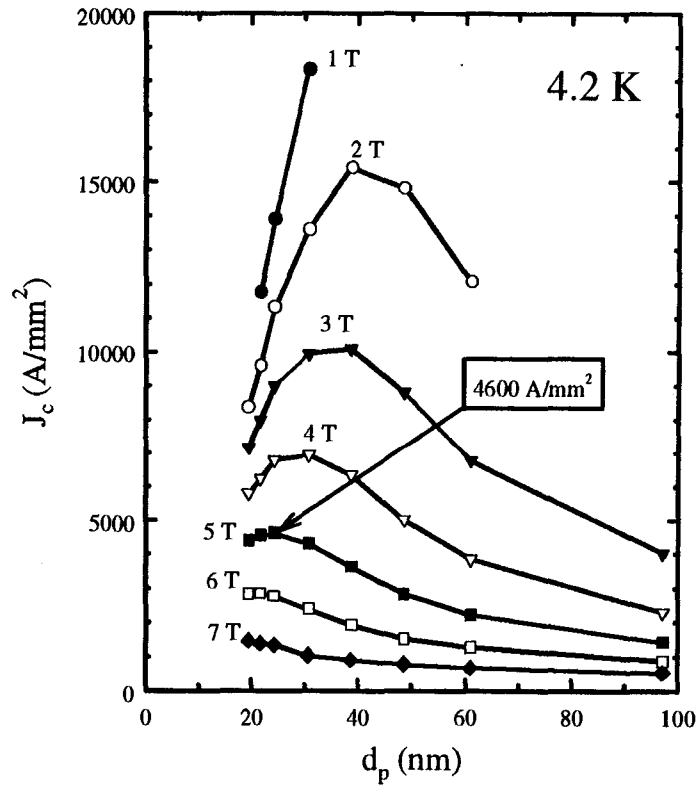

Jc vs. *dp* for applied fields from 1 to 7T for Nb-47wt.%Ti (APC with 24 vol.%Nb of pins), showing new world record for round strand (Heussner et al. UW 1996)

Summary: LTS conductors

- Conventional Nb-Ti is effectively optimized
  - » some new, very high field optimization needed for LHC quadrupoles
  - » APC wires show much higher J_c at lower H and are not yet optimized
- Focus of Nb_3Sn development is on:
  - » trade off of J_c and hysteresis loss
  - » transverse strain tolerance
- APC strategies would be very good for Nb_3Sn

HTS Issues and Characteristics

- Multifilamentary BSCCO conductors are available now
  - » BSCCO-2223 from American Superconductor Corp. and IGC
  - » BSCCO-2212 from IGC and OST
- Prototype biaxially aligned YBCO monofilament tape conductors exist:
  - » Ion Beam Assisted Deposition (IBAD) at LANL
  - » Rolling Assisted Biaxially Textured substrate (RABITS) at ORNL

Pipatron magnet scheme

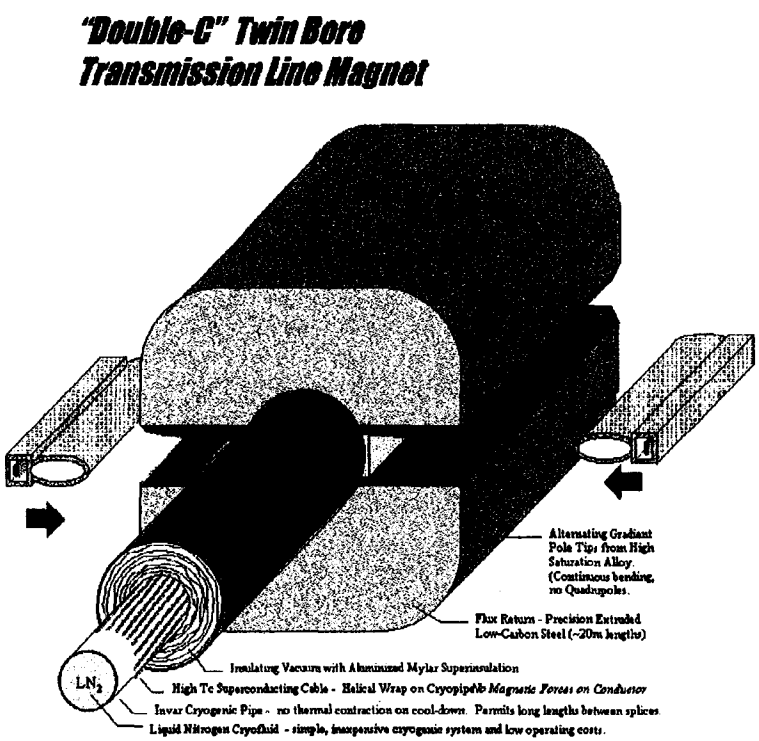

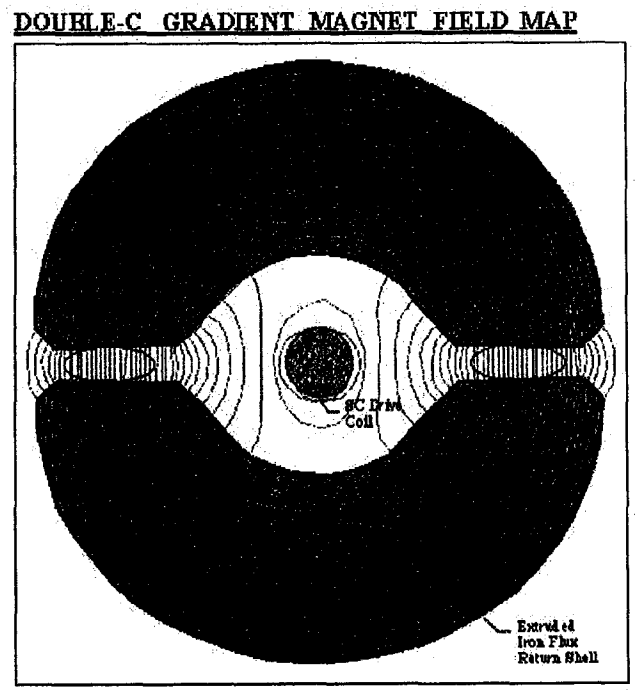

- Single turn magnet with twin apertures for P-P.
- Warm Iron, warm bore driven by a superconducting transmission line at center of magnet.
- No Forces on conductor due to symmetry of design.
- The conductor sees ~1 Tesla, the beams see 2 Tesla.

From G. W. Foster: http://waldo.fnal.gov/PIPE/foster.html

Conductors for the Pipatron

- Pipatron conductor is single turn 50kA
- 1 cm wide IBAD LANL tape has I_c (77K, 0T) of about 200 A
  - » 250 conductors wrapped around 1" dia. pipe (Foster et al.) would give transposed 50 kA cable
  - » field is in the plane of the tape and of order 0.5 T
  - » this is suitable for LTS Nb-Ti and HTS BSCCO conductors. YBCO would be good when available.

Very high field conductors

- BSCCO-2212 and -2223 at less than 20K offer enormous capability
  - » high and rather field independent Jc
  - » J_c anisotropy is low at low temperature
- Problems to be addressed for cosine θ magnets:
  - » crushing strength of Ag sheath is poor
  - » cabling technology needs to be developed

BSCCO-2223 power transmission line conductor

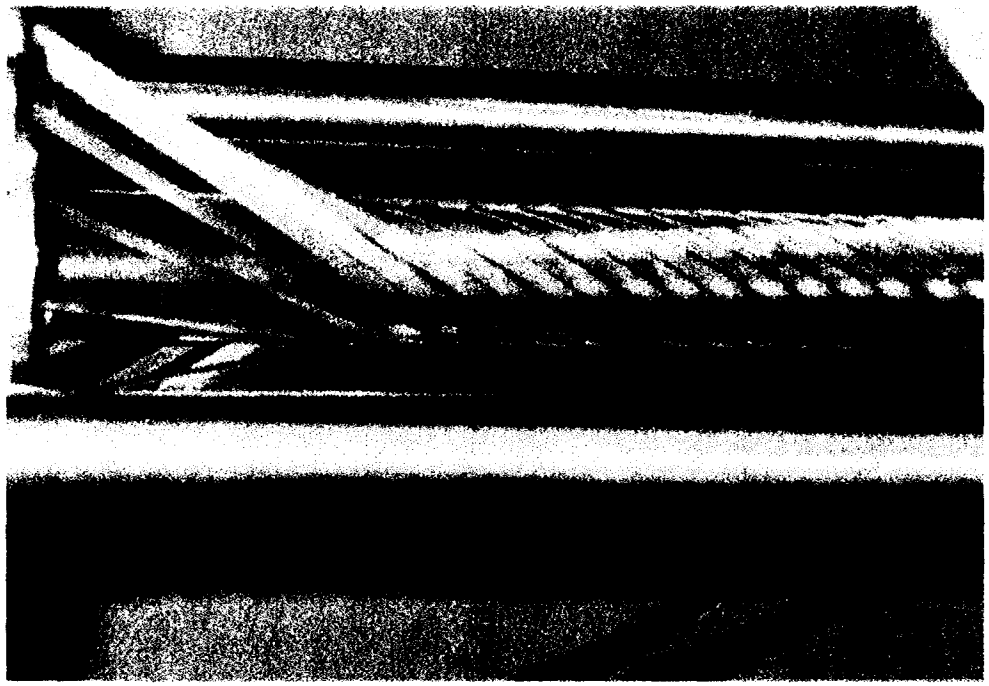

Machine stranding of ASC HTS tape into a multilayer conductor at Pirelli Cable Corporation under EPRI/DOE contract.

Images Courtesy of American Superconductor CORPORATION

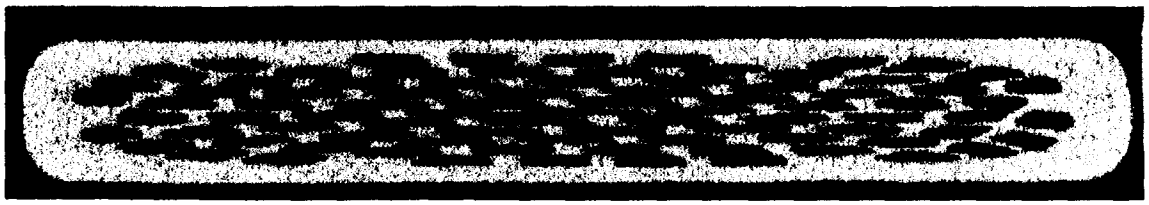

85 Filament Bi-2223 composite (~0.2x2.5mm) with 77K self field J_c of 440A/mm^2

J_c in HTS conductors

- Current flow in conductors is percolative
  - » J_c is determined by connectivity and grain alignment and strongly dependent on processing
  - » YBCO potentially much better than BSCCO
- J_c is higher for H parallel to the CuO_2 planes
  - » Anisotropy of J_c is lower at lower T
- HTS conductors are more dissipative than LTS (flux creep, barriers etc.)
  - » Criterion for J_c more important for HTS than LTS

J_c comparisons: LTS and HTS

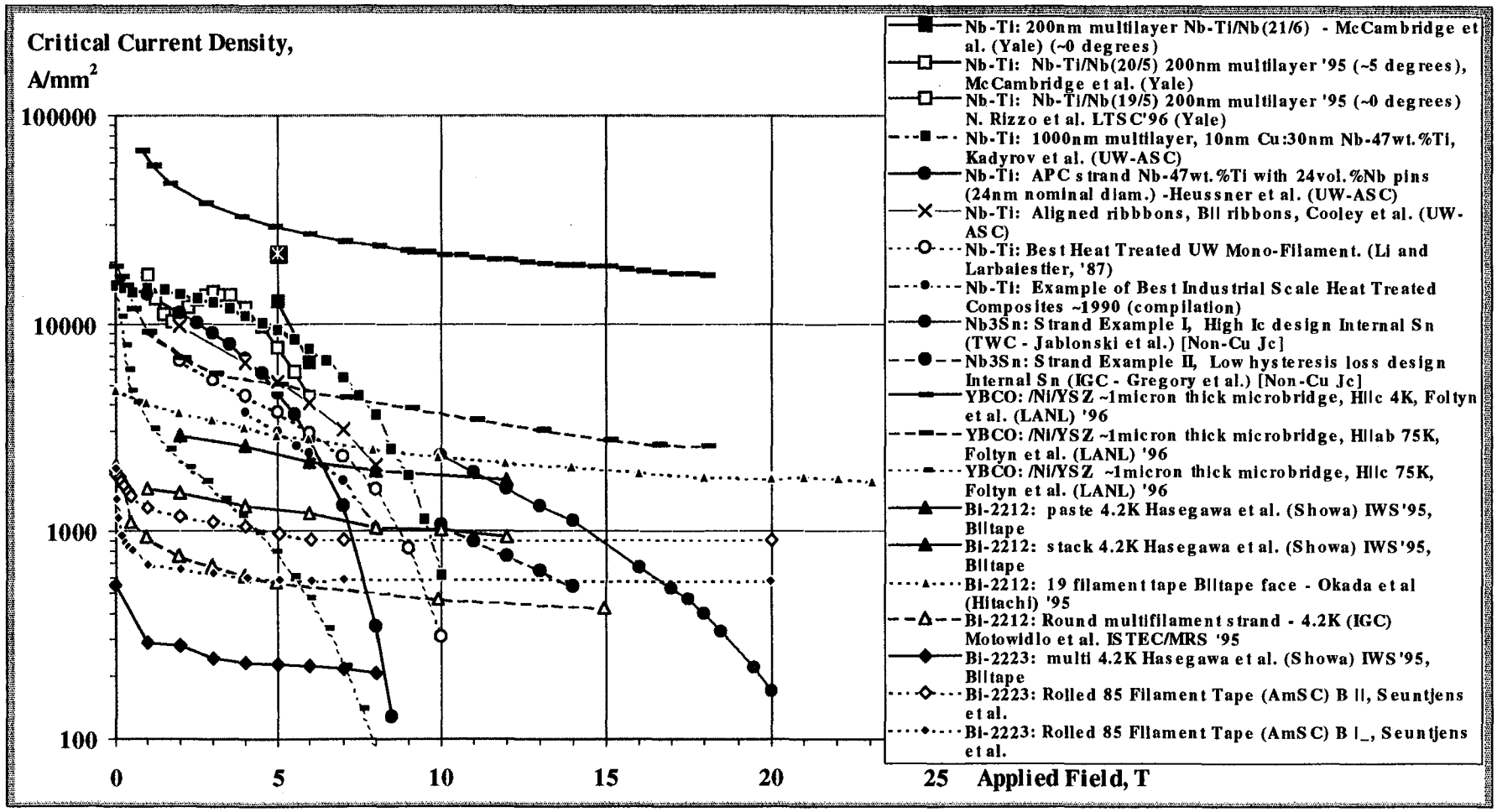

Current percolates in HTS conductors

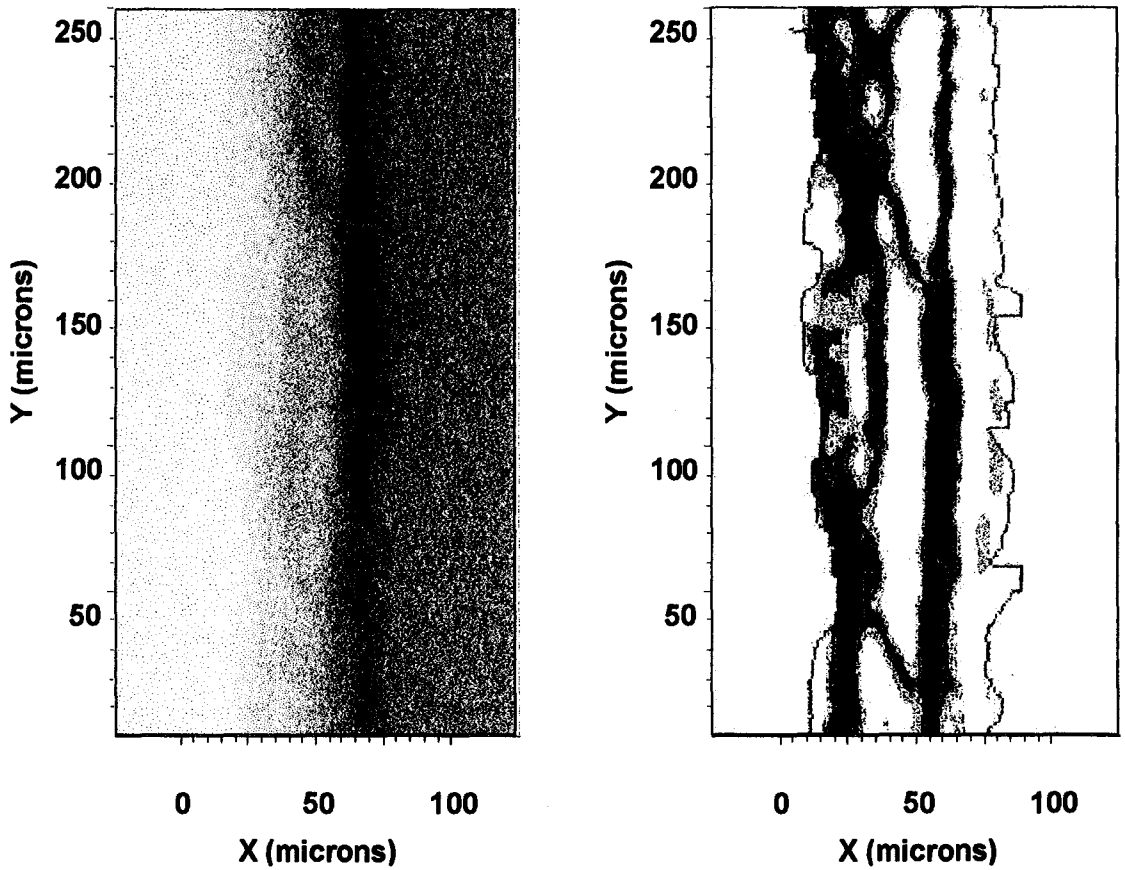

Magneto optical imaging shows this directly (Pashitski et al. Applied Phys. Letts. and Physica C 1995 (UW))

Summary

- LTS conductors well known to HEP community
  - » improved Nb_3Sn conductors
  - » APC Nb-Ti
- HTS conductors of BSCCO-2223 available today in km lengths
  - » J_c values tend to be lower than in LTS but are improving fast
  - » second generation YBCO tape conductor may offer strong promise

Geology in the Fermilab Region

by
David L. Gross

Illinois State Geological Society

GEOLOGY OF THE FERMILAB REGION

David L. Gross
Illinois State Geological Survey

When you
seek geological advice,
start with your
State Geological Survey

- Drilling is done every day by the petroleum industry to depths of many thousands of feet
- Oil wells are often drilled in regions of complex geology

- Tunneling is done every day
- Tunneling is most economical if the geological conditions are well documented and uniform

The State of Illinois offered to provide the tunnel for the SSC—a promise of not just dollars, but of the installed tunnel!

Horizontal drilling is done every day by the petroleum industry, but not yet to the horizontal distances under consideration for the more ambitious versions of a large hadron collider

- The geology in the Fermilab region is exceptionally well documented
- The Silurian dolomite under Chicago and the Ordovician dolomite under Fermilab are superb hosts for tunnels or drill holes

SITE CONDITIONS AT FERMILAB

Well Understood, Predictable Rock and Tunneling Conditions

Relatively Homogenous Rock Mass

Seismically Stable

Vibration Free Environment

No Settlement Problems

LOCAL TUNNELING EXPERIENCE

72 Miles of Tunneling Experience in Chicago, Using TBMs

266 Shafts Constructed for TARP

Tunnels Constructed Under Estimated Cost and Ahead of Schedule

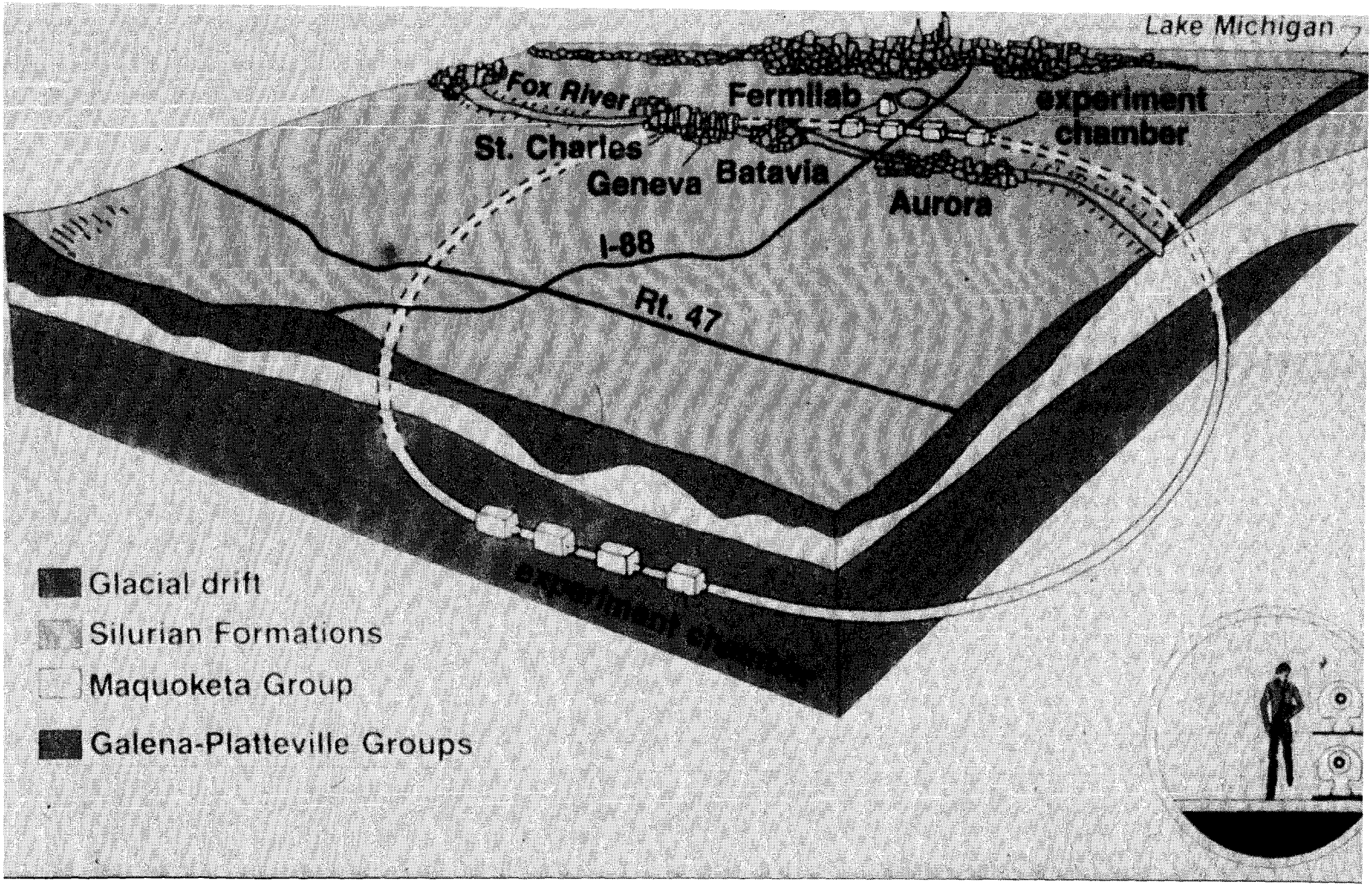

Block diagram of the geology in the Fermilab region. Note that glacial drift is present over most of the area. The bedrock, when viewed in a north-south direction is approximately horizontal. The bedrock, when viewed in an east-west direction, is dipping to the east meaning that each layer of rock is found at progressively greater depths further to the east.

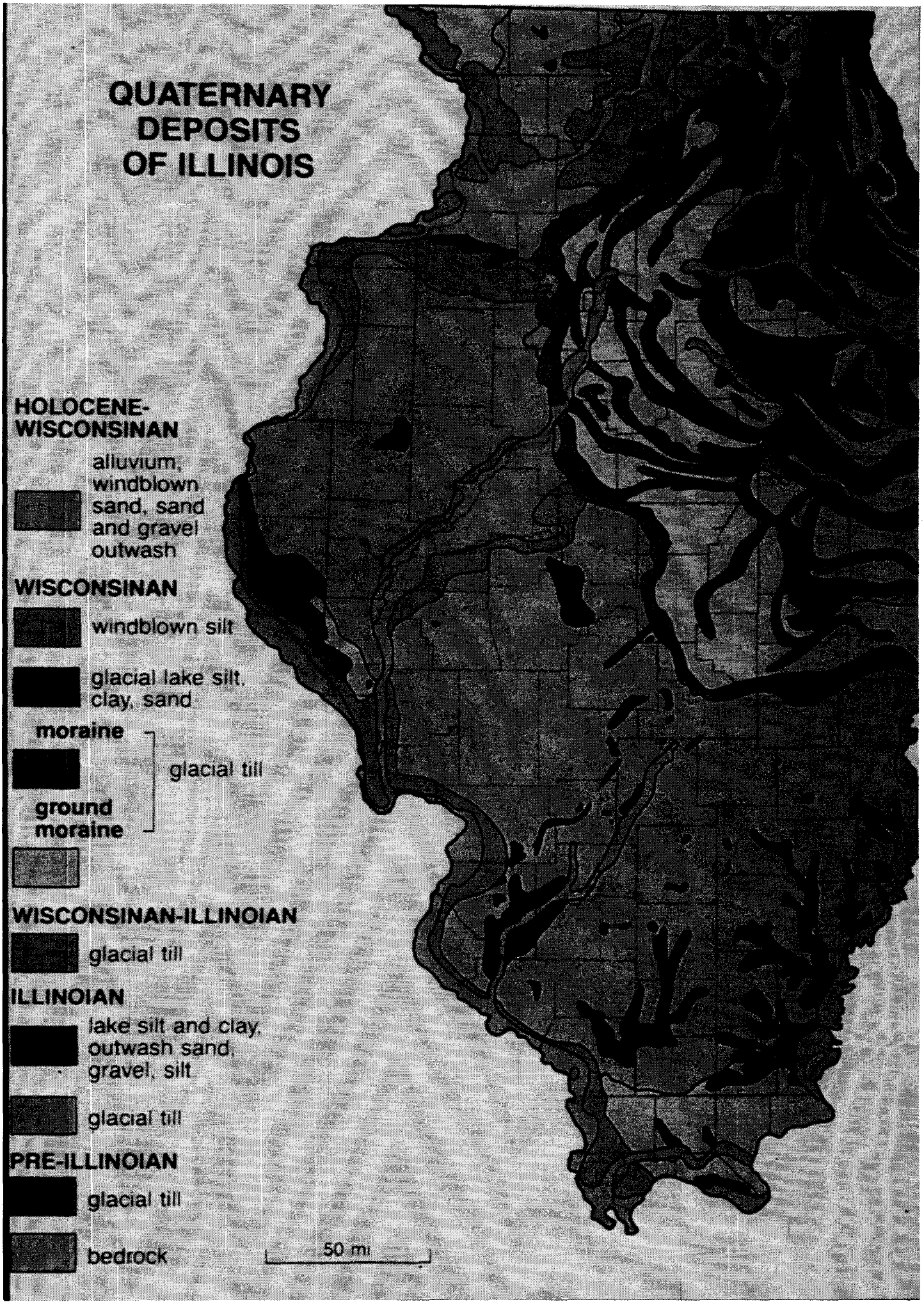
QUATERNARY DEPOSITS OF ILLINOIS
HOLOCENE-WISCONSINAN
alluvium, windblown sand, sand and gravel outwash
WISCONSINAN
windblown silt
glacial lake silt, clay, sand
moraine
ground moraine
glacial till
WISCONSINAN-ILLINOIAN
glacial till
ILLINOIAN
lake silt and clay, outwash sand, gravel, silt
glacial till
PRE-ILLINOIAN
glacial till
bedrock
50 mi

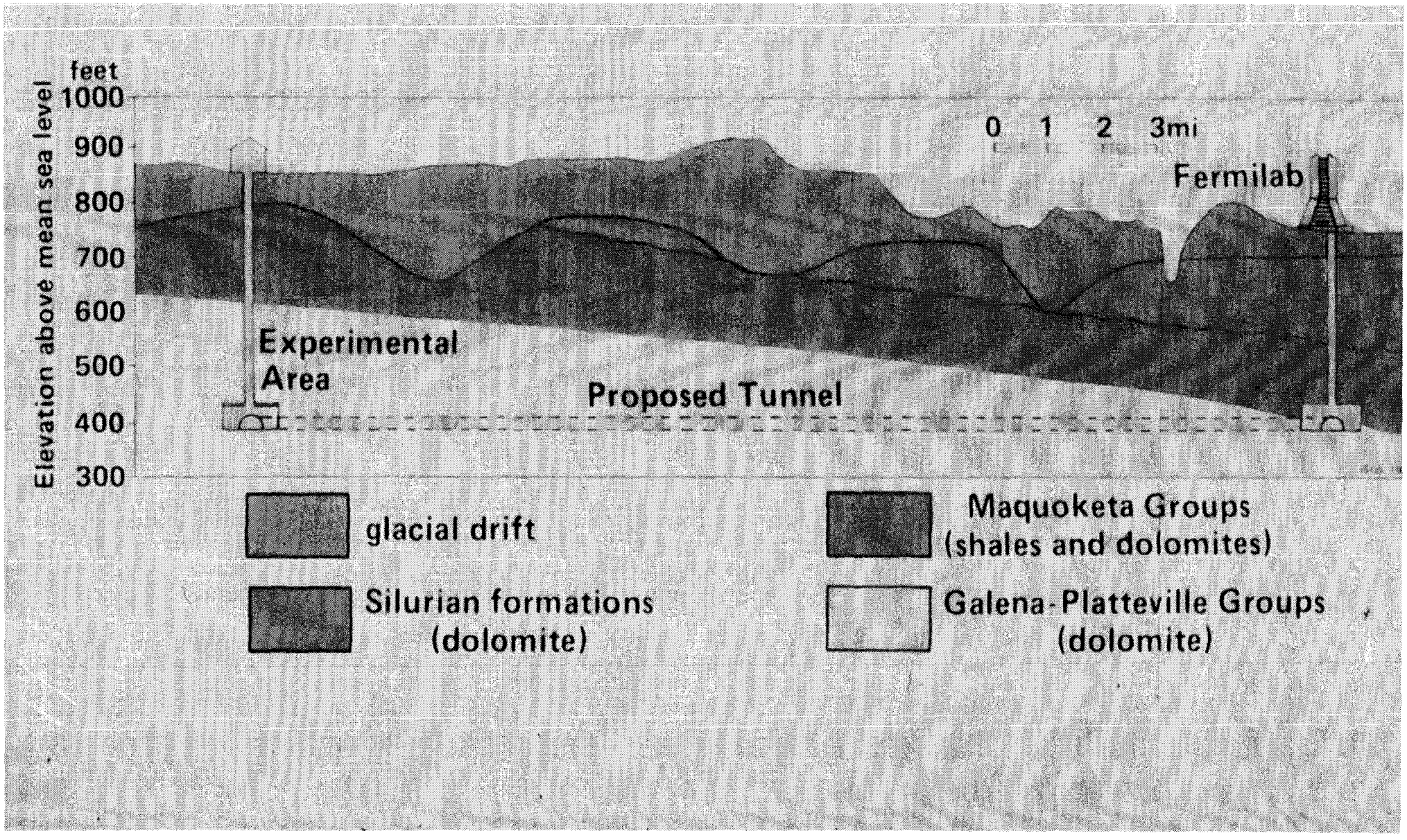

An east-west cross section showing the placement of a tunnel or horizontal drill hole in the dolomite of the Galena-Platteville Groups.

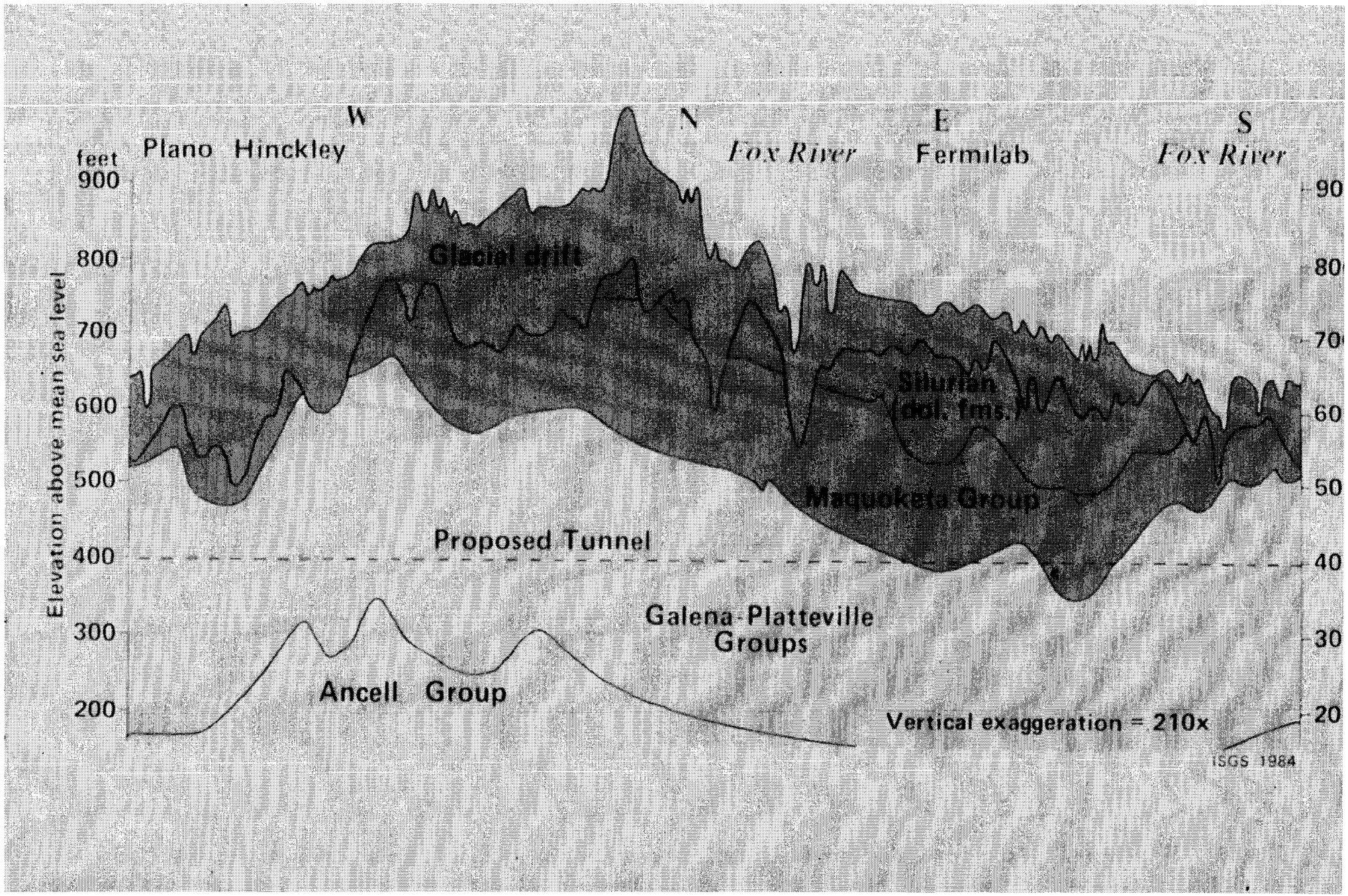

Circular, or "lampshade" cross section of the geologic materials west of Fermilab. For a ring of approximately 160 km circumference, most or all of the tunnel or horizontal drill hole could be placed in the dolomite.

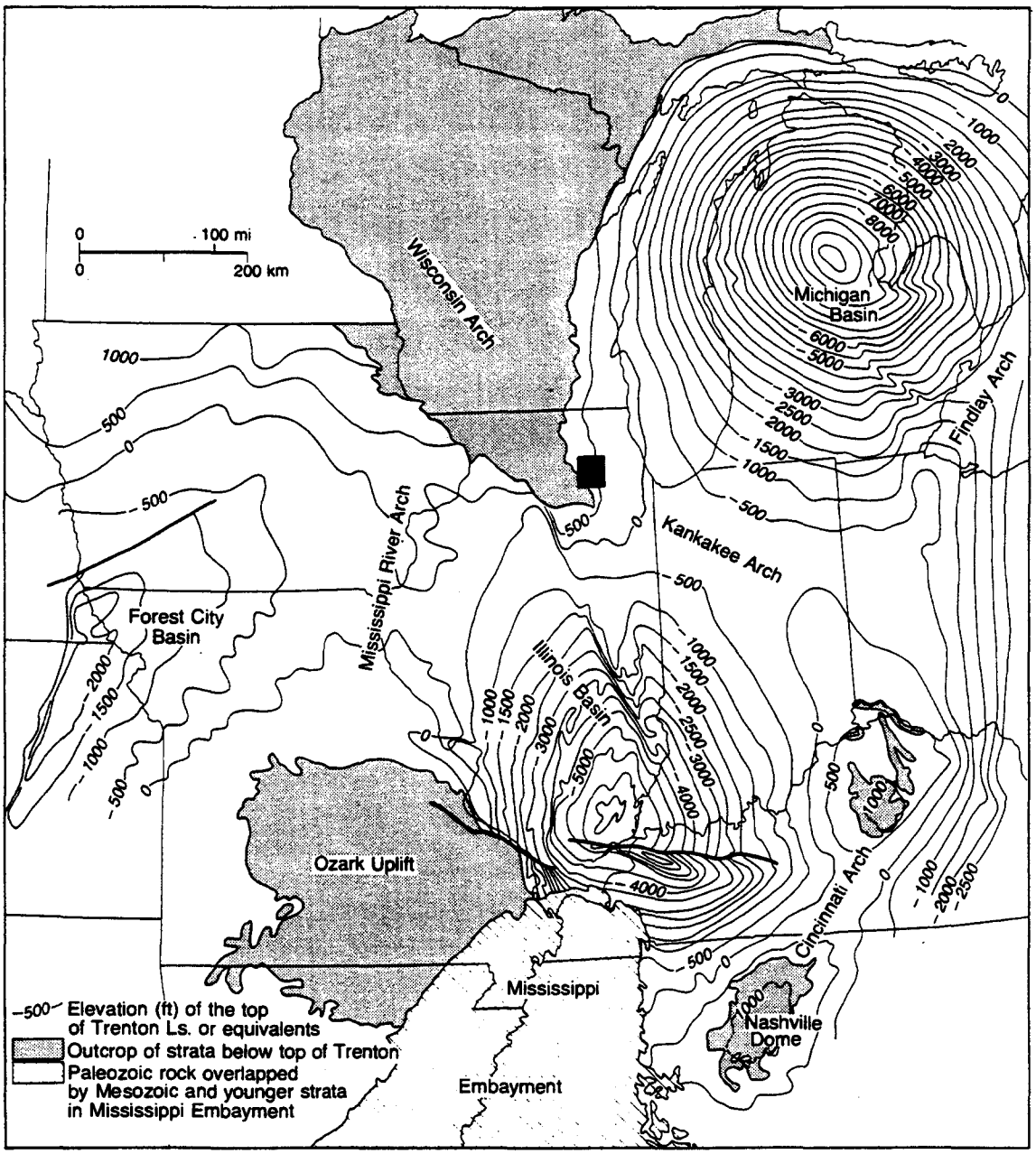

Figure 3 Regional geologic setting.

Map of the regional extent of dolomite that could serve as an excellent host for a tunnel or horizontal drill hole in the Ferimlab region.

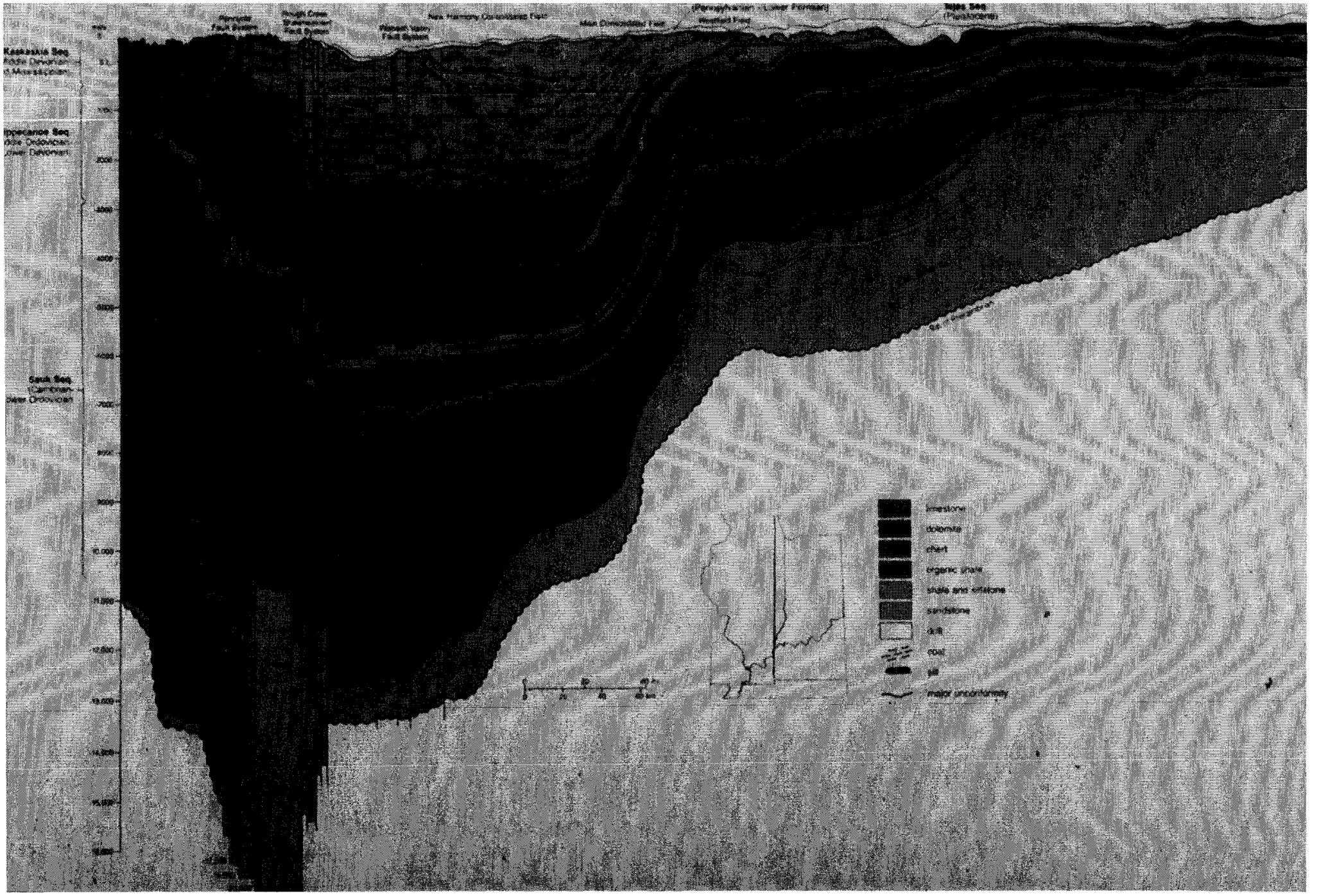

A cross section illustrating the full thickness of sedimentary rocks over the north (right) to south (left) length of Illinois. Note that the geology of southern Illinois is much more complex than is the geology of northern Illinois.

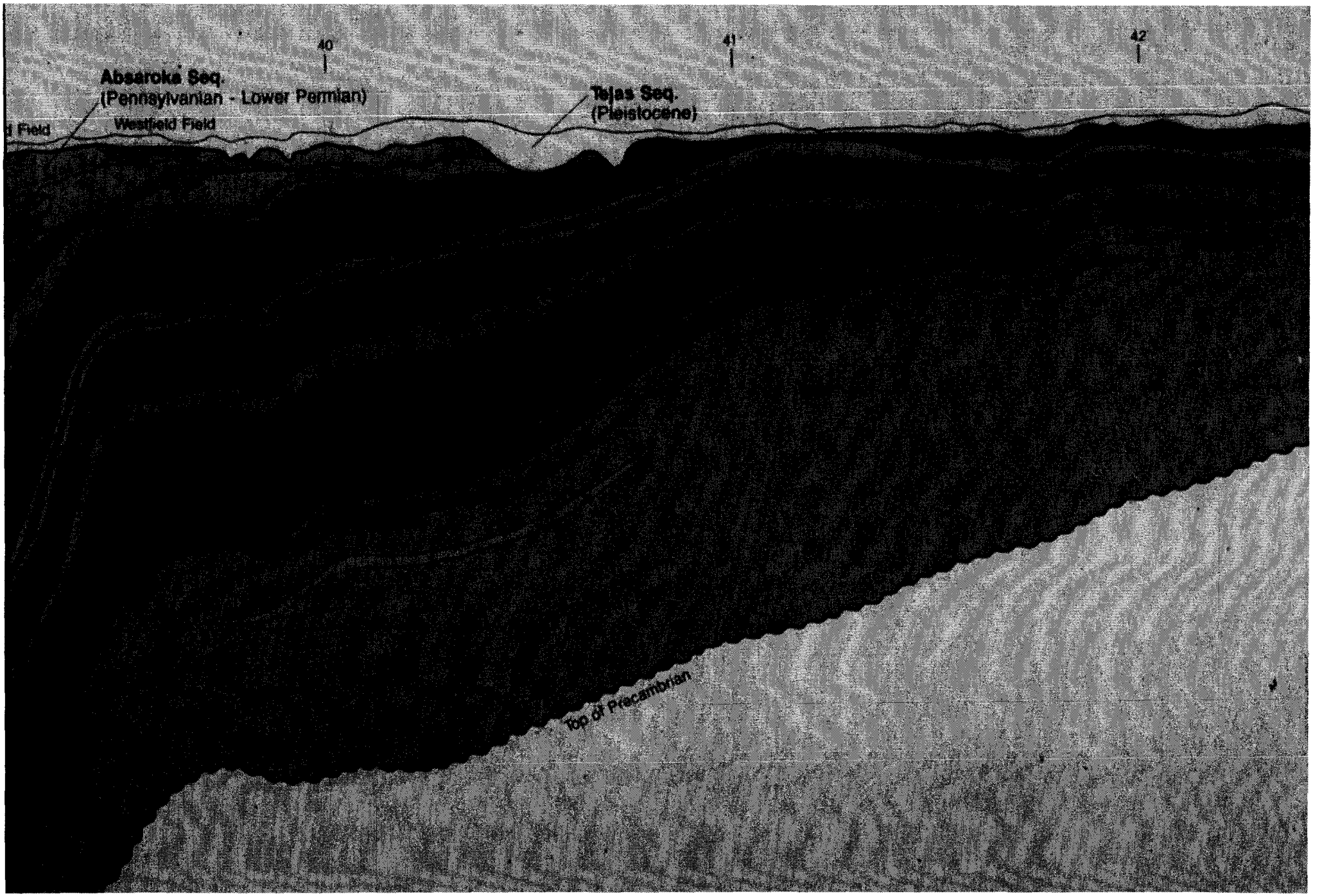

A portion of the cross section illustrating the full thickness of sedimentary rocks. Fermilab is located between 41 and 42 degrees north. The rocks above the St. Peter Sandstone are preferred for a tunnel or horizontal drill hole.

In a glaciated region, groundwater is typically present in the glacial drift and in the uppermost few meters of bedrock.

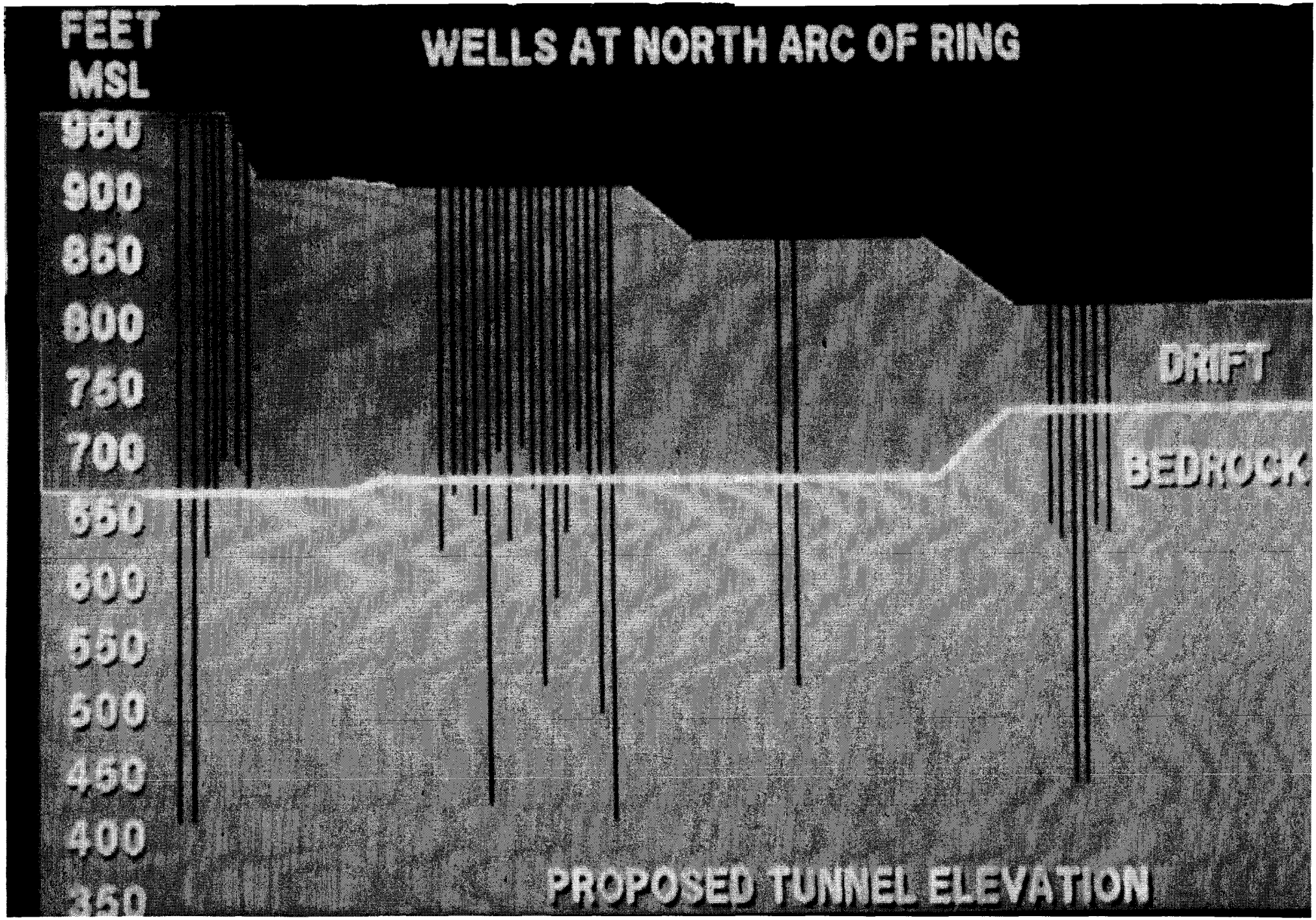

In the region west of Fermilab, individual wells are generally drilled to the base of the glacial drift or a short distance into the bedrock.

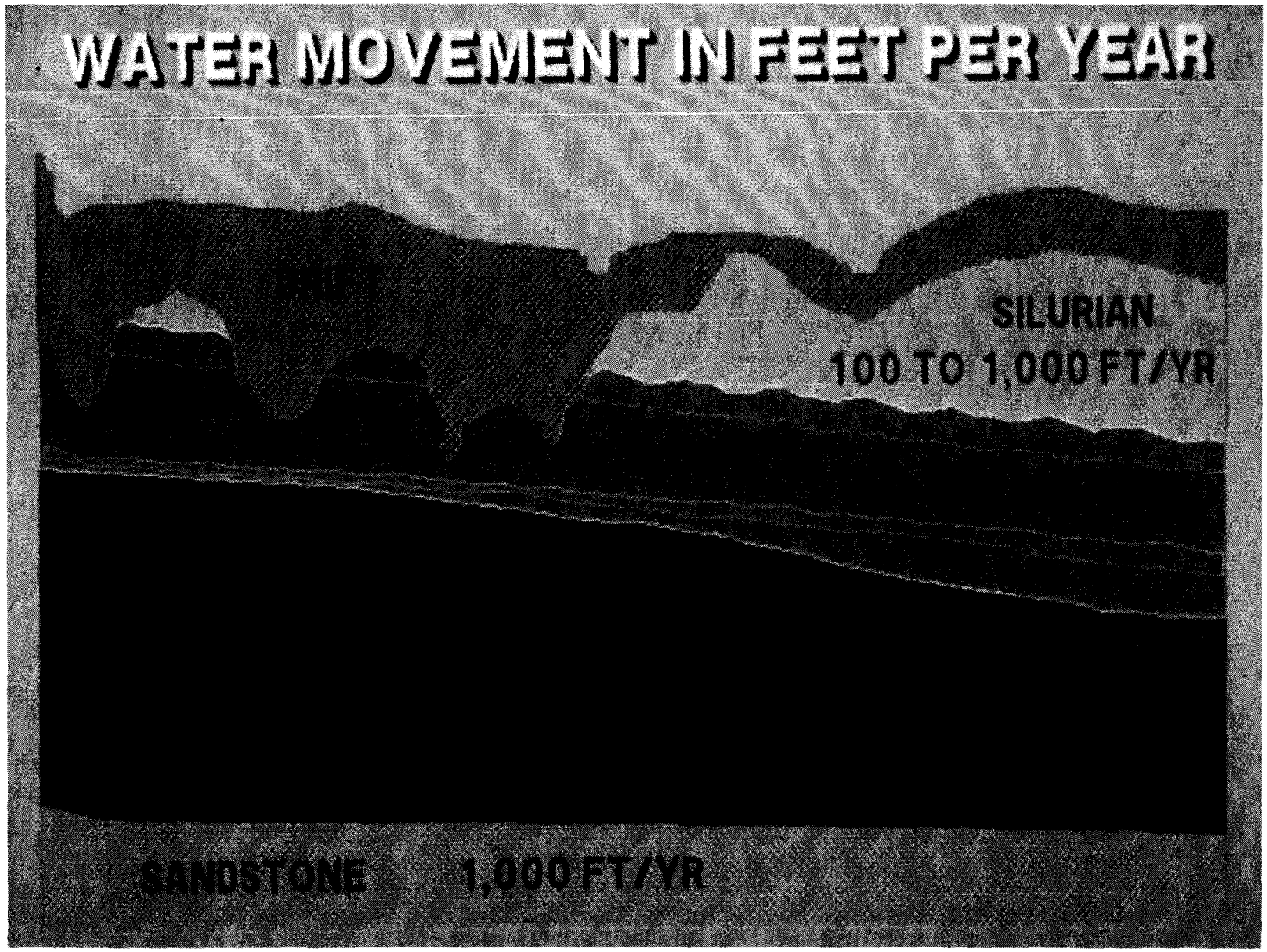

In the bedrock beneath Fermilab, the rate of movement of groundwater varies by three orders of magnitude. The dolomite of the Galena-Platteville does not yield much water, whereas the sandstone is a high quality aquifer. Therefore, the dolomite is more attractive as a potential host for a tunnel or horizontal drill hole for an accelerator project.

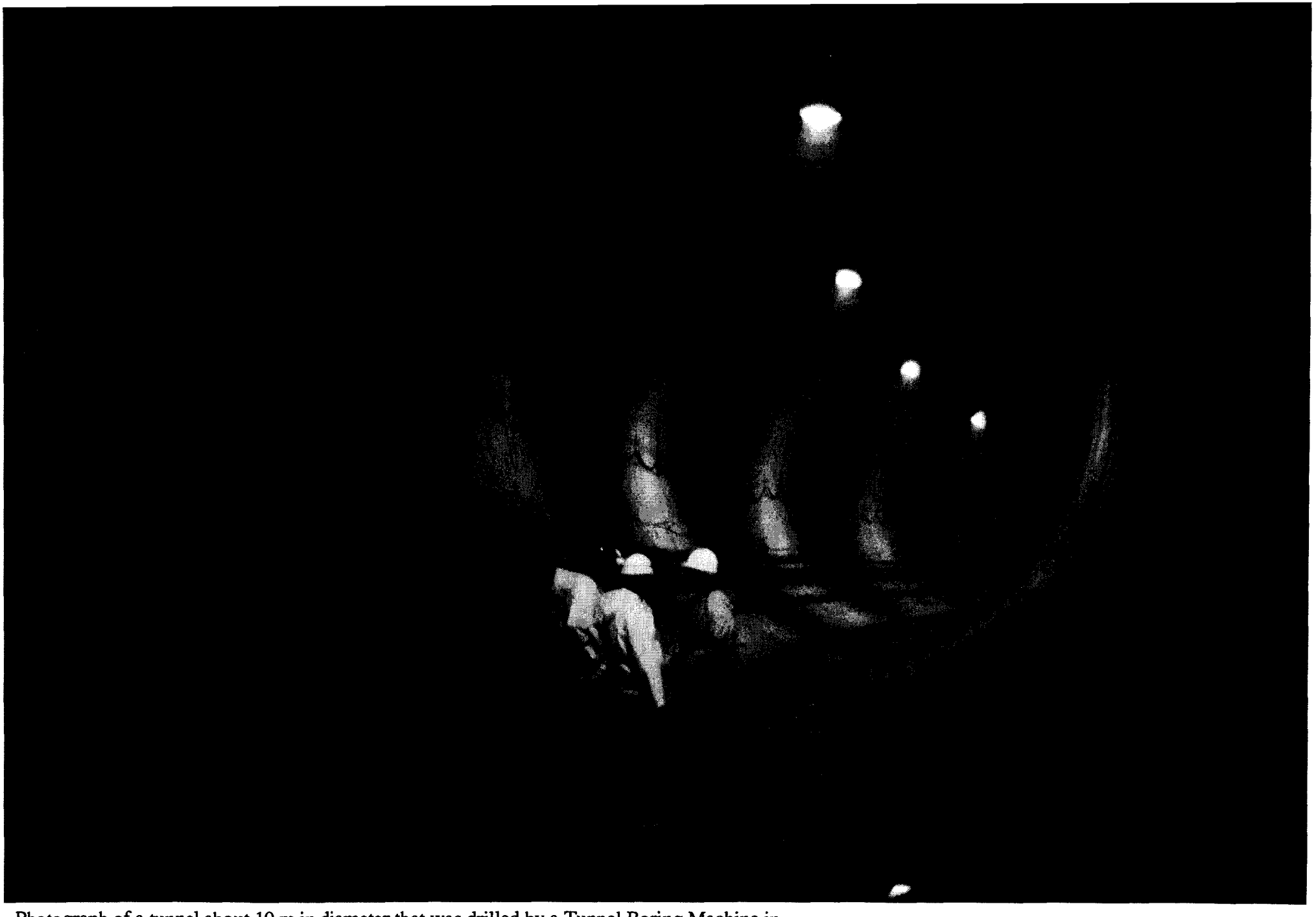

Photograph of a tunnel about 10 m in diameter that was drilled by a Tunnel Boring Machine in dolomite under the city of Milwaukee. This is an unlined tunnel. There is no concrete visible in this photograph.

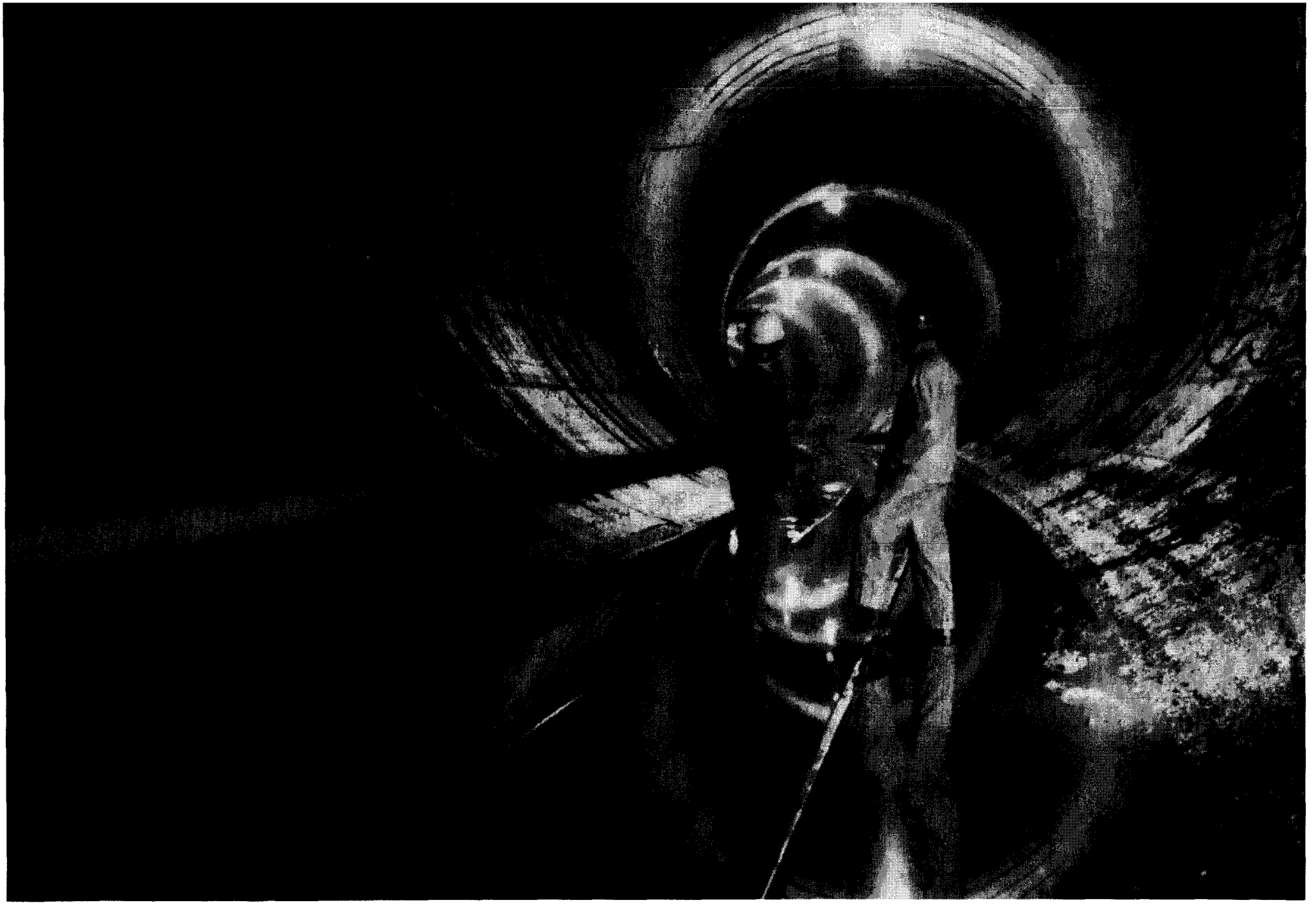

Photograph of a tunnel drilled by a Tunnel Boring Machine in dolomite under the city of Chicago.
This is an unlined tunnel. There is no concrete visible in this photograph.

Microtunneling and Horizontal Drilling

by
Tom Iseley

North American Society
for Trenchless Technology

TRENCHLESS TECHNOLOGY
A
PRACTICAL SOLUTION TO EXPANSION AND REPAIR OF UNDERGROUND UTILITIES

Our nations underground utility infrastructure is a valuable asset and a critical element in our global economic competitiveness. Practical solutions must be found to expand and rehabilitate that asset. Environmental concerns, combined with community relations, safety and the cost of utility services have created a demand for <u>new ways</u> to expand and rehabilitate underground utility services.

"Industry more than ever considers water infrastructure one of the most important considerations when deciding where to locate. The cost and availability of clean water and adequate sewage treatment directly impact the bottom line for most American industries."

Rep. Sherwood Boehlert (R-NY)
Ranking Republican
House Water Resources &
Environment Subcommittee

Configuration of Trenchless Philosophy

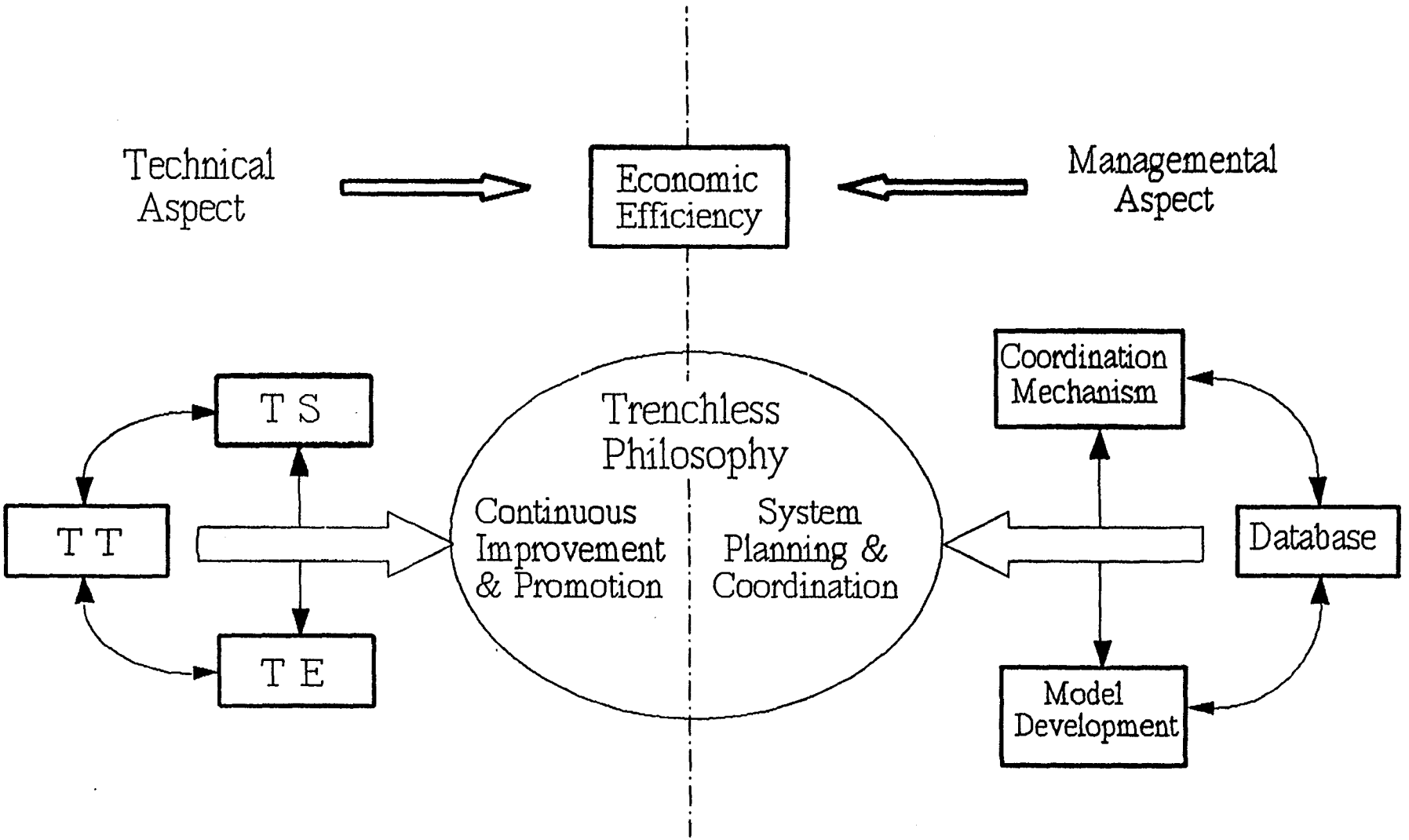

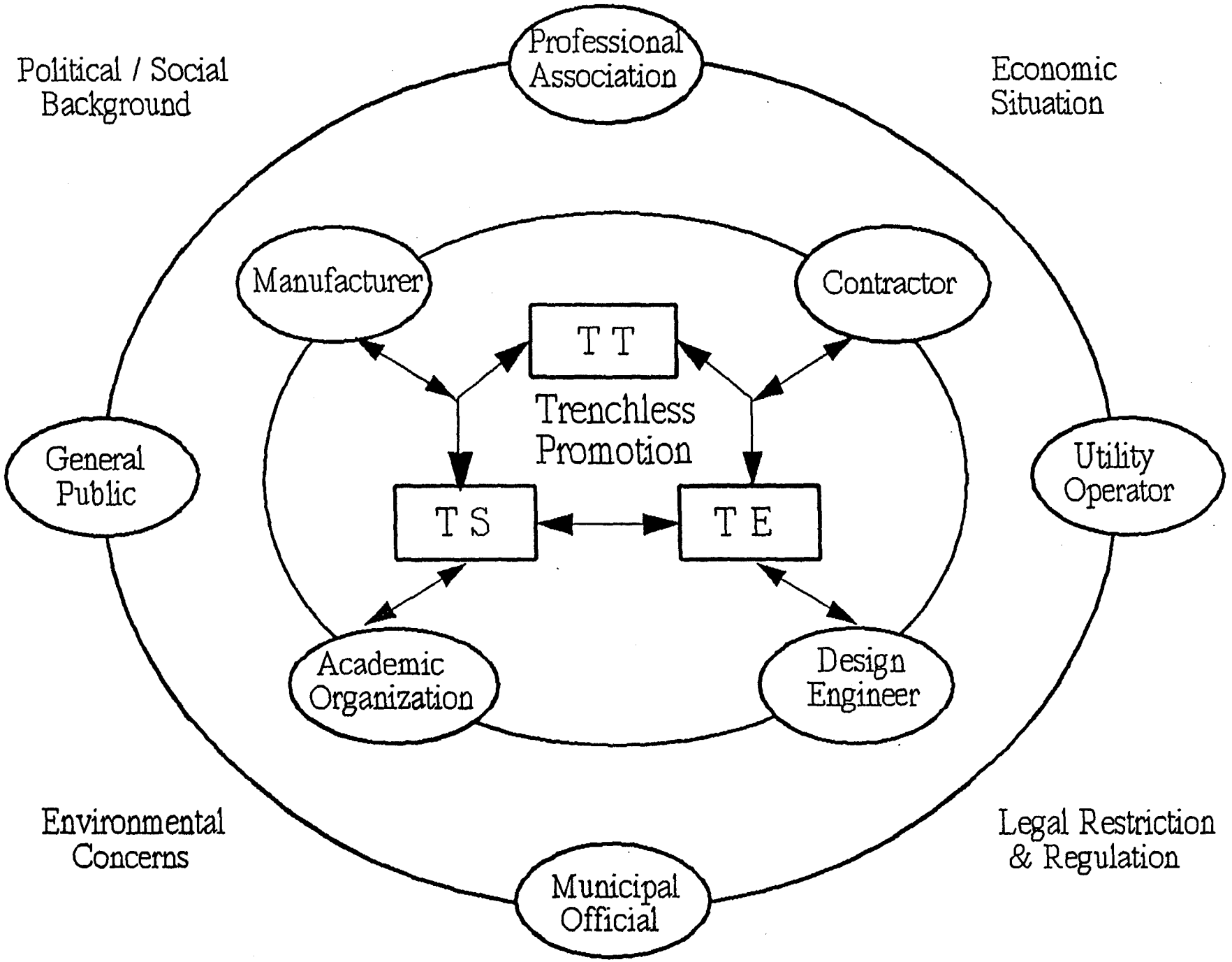
Professional Association
Political / Social Background
Economic Situation
Manufacturer
Contractor
T T
Trenchless Promotion
General Public
Utility Operator
T S
T E
Academic Organization
Design Engineer
Environmental Concerns
Legal Restriction & Regulation
Municipal Official

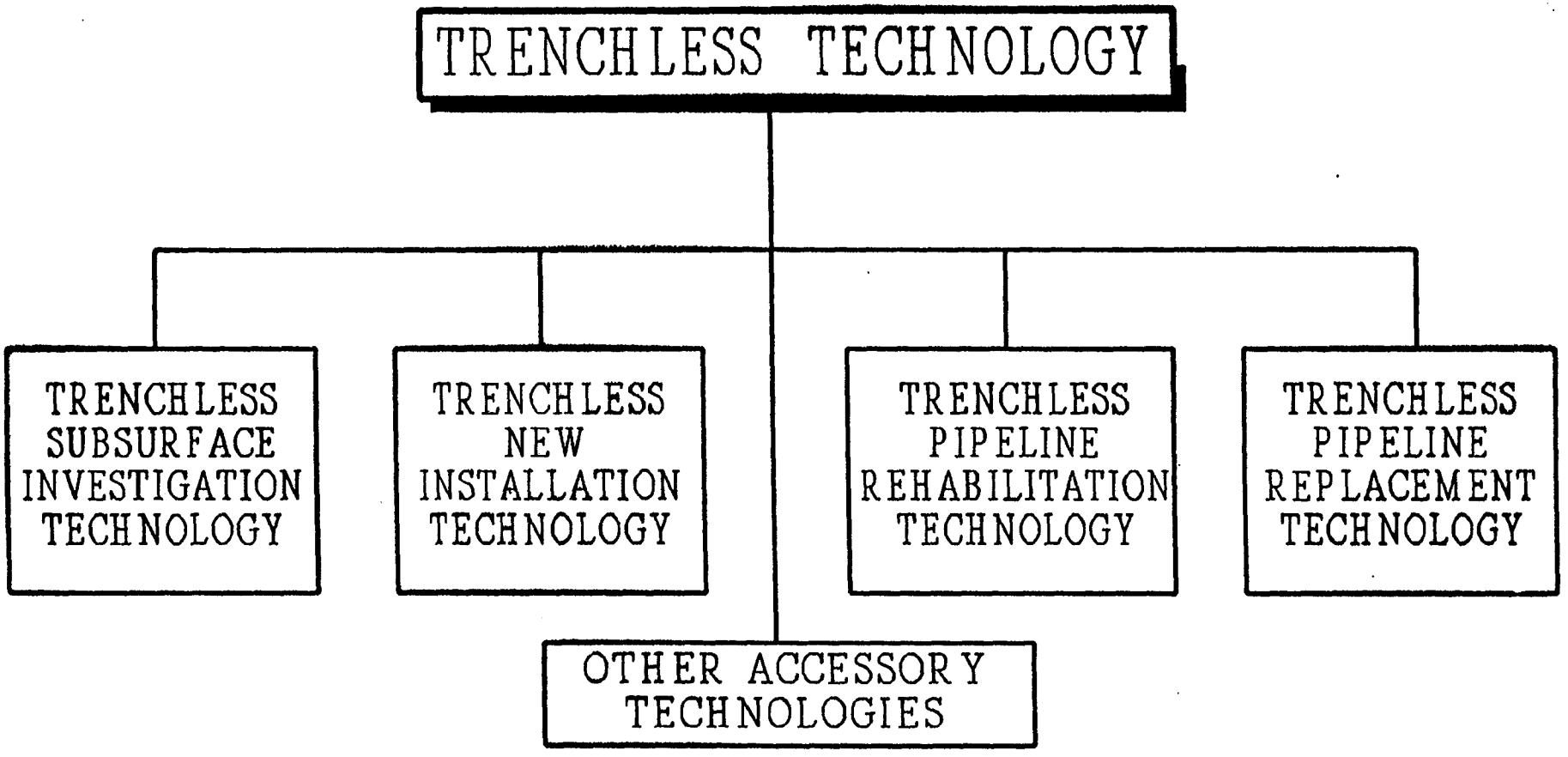
TRENCHLESS TECHNOLOGY
TRENCHLESS SUBSURFACE INVESTIGATION TECHNOLOGY
TRENCHLESS NEW INSTALLATION TECHNOLOGY
TRENCHLESS PIPELINE REHABILITATION TECHNOLOGY
TRENCHLESS PIPELINE REPLACEMENT TECHNOLOGY
OTHER ACCESSORY TECHNOLOGIES

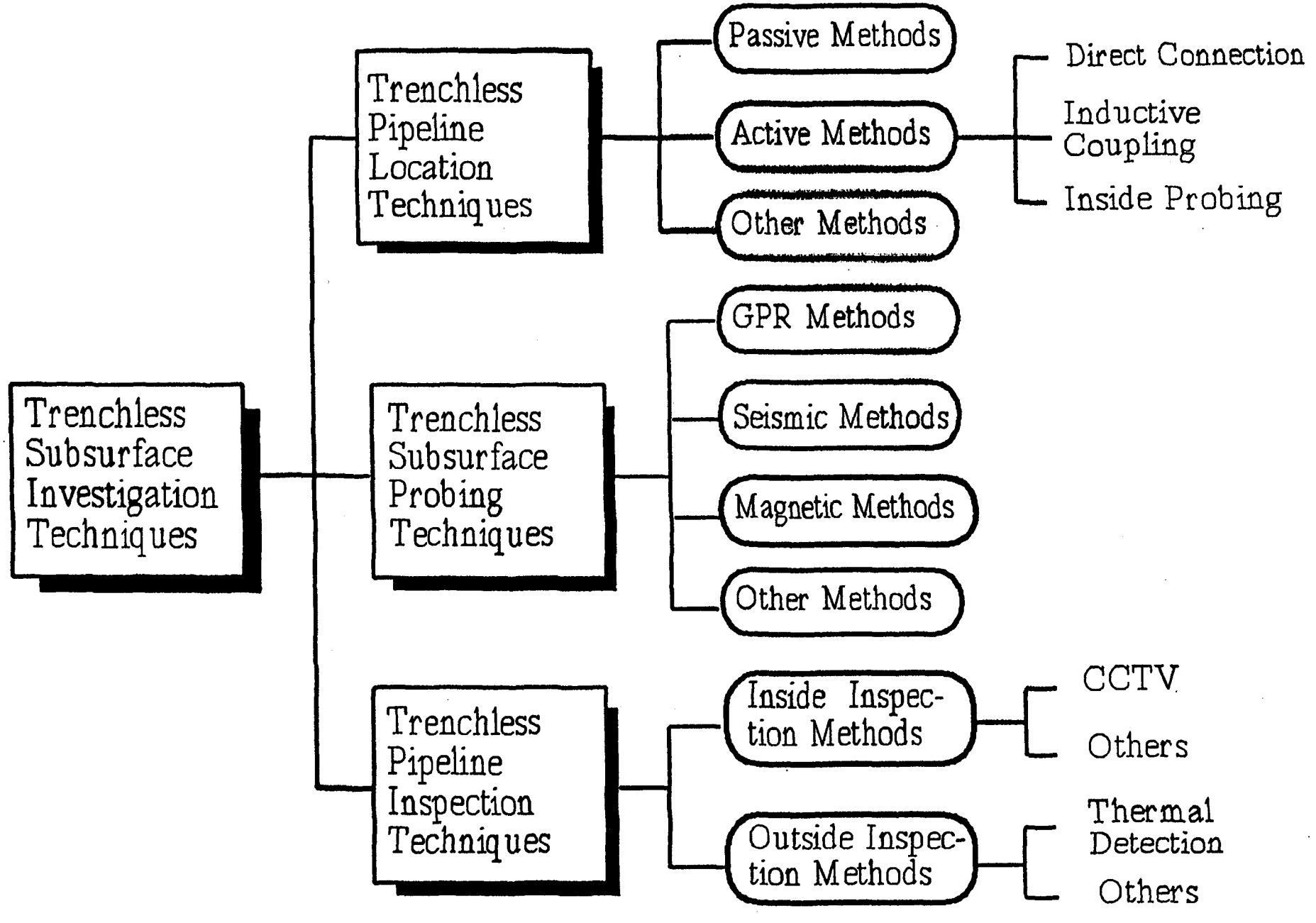
Trenchless Subsurface Investigation Techniques
Trenchless Pipeline Location Techniques
Passive Methods
Active Methods
Other Methods
Direct Connection
Inductive Coupling
Inside Probing
Trenchless Subsurface Probing Techniques
GPR Methods
Seismic Methods
Magnetic Methods
Other Methods
Trenchless Pipeline Inspection Techniques
Inside Inspection Methods
CCTV
Others
Outside Inspection Methods
Thermal Detection
Others

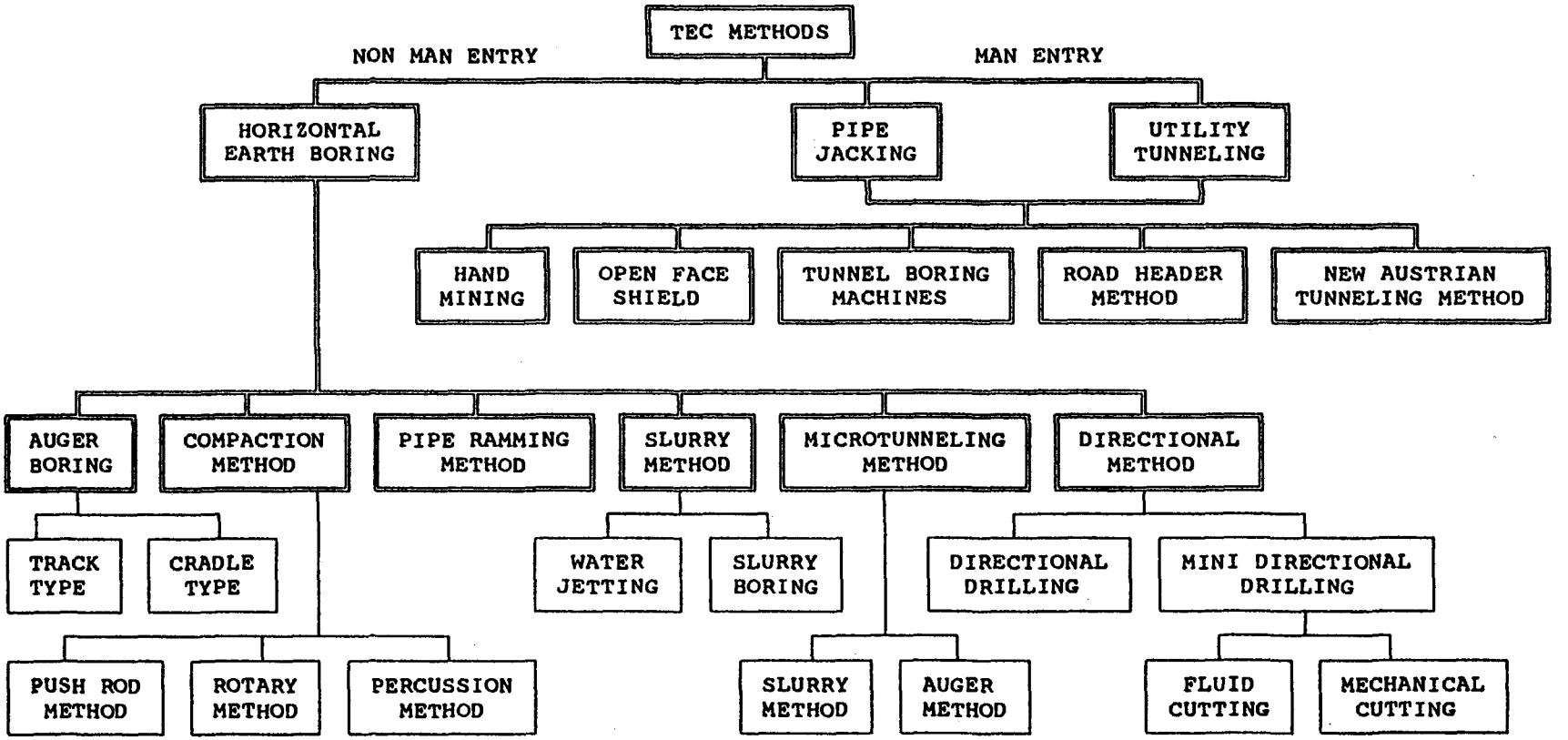

Figure 1: Trenchless Excavation Construction (TEC) Classification Systems

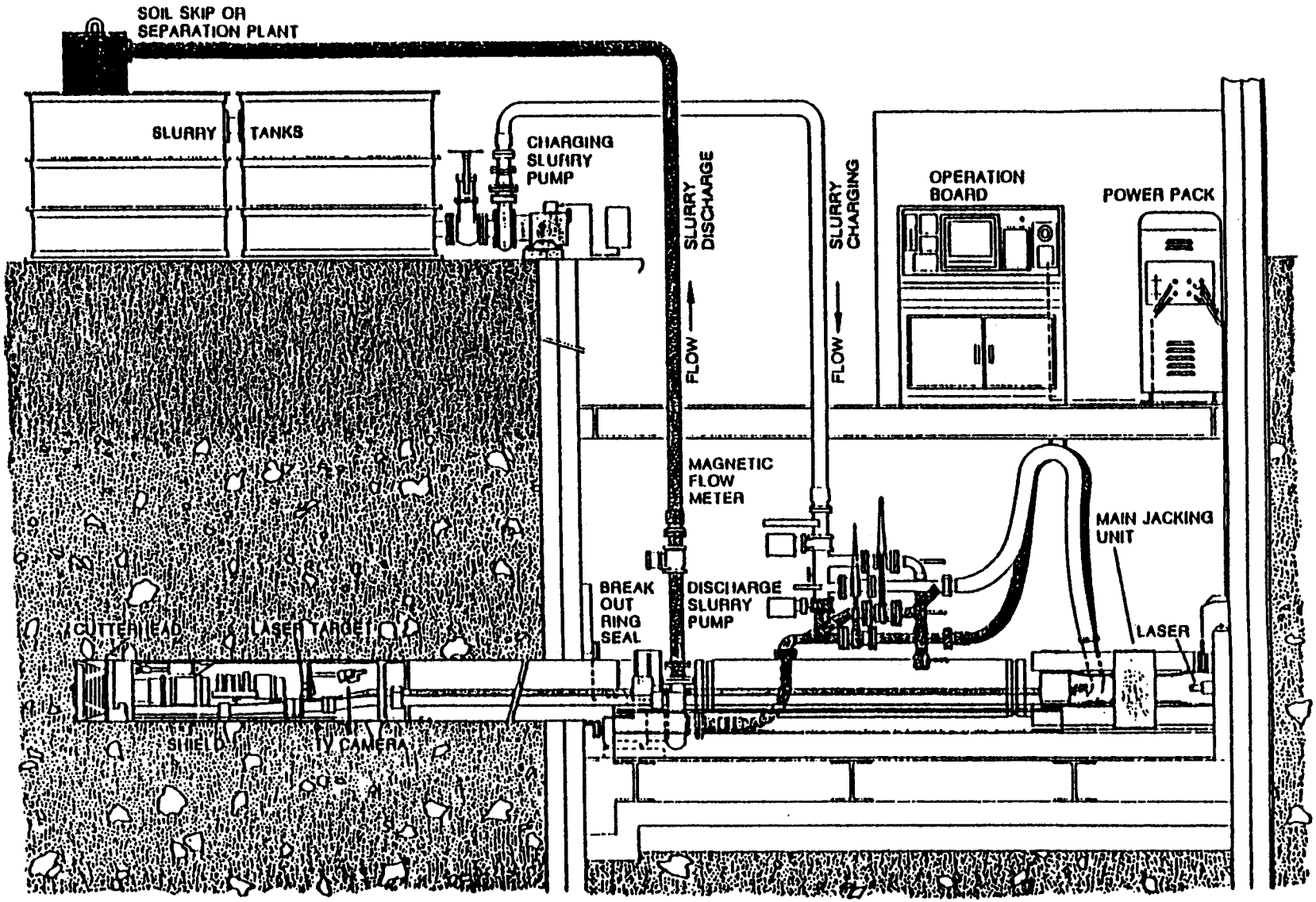

Figure 4: Slurry Type Microtunneling Machine Layout Detail

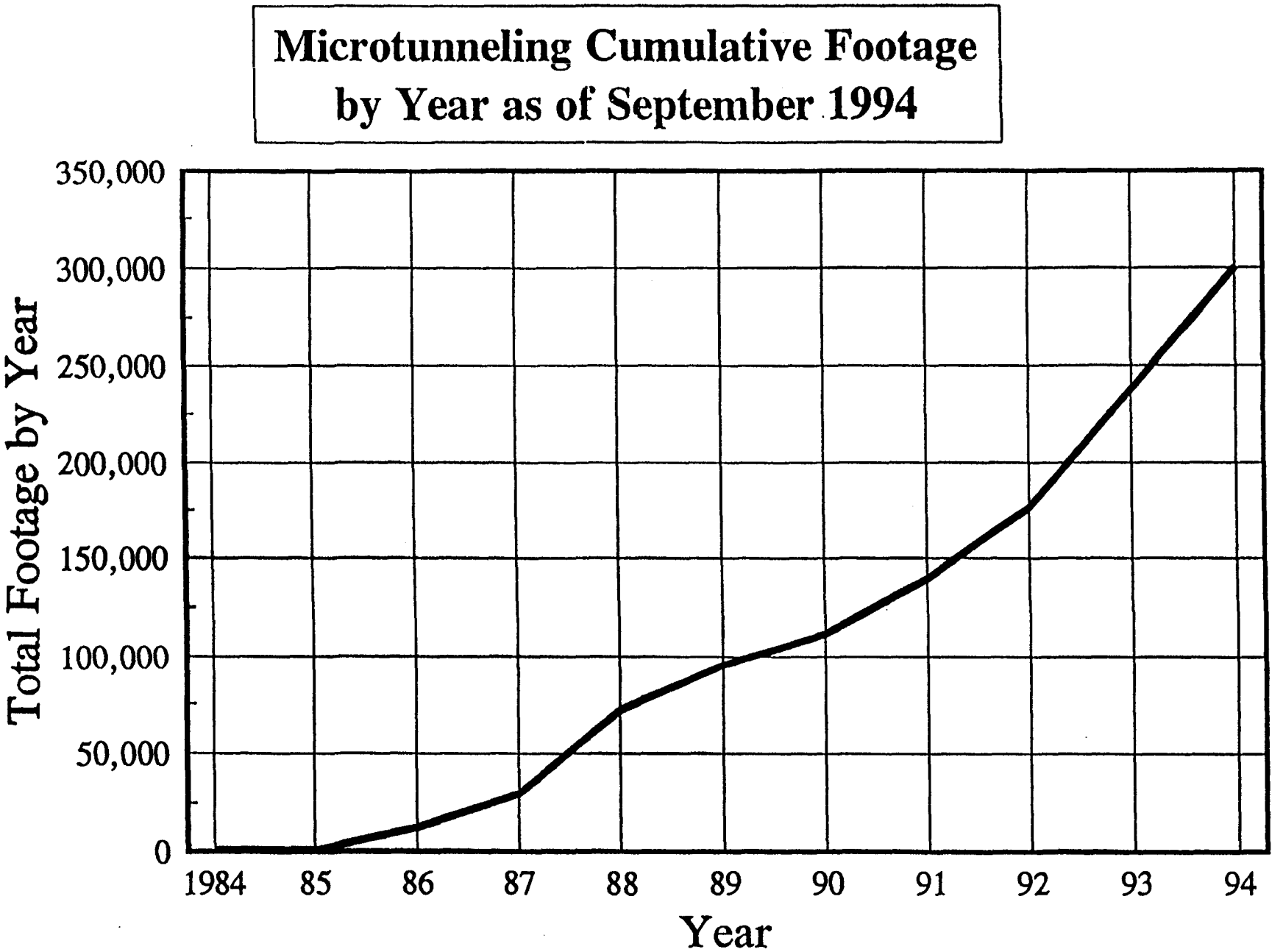
Microtunneling Cumulative Footage
by Year as of September 1994
Total Footage by Year
350,000
300,000
250,000
200,000
150,000
100,000
50,000
0
1984
85
86
87
88
89
90
91
92
93
94
Year

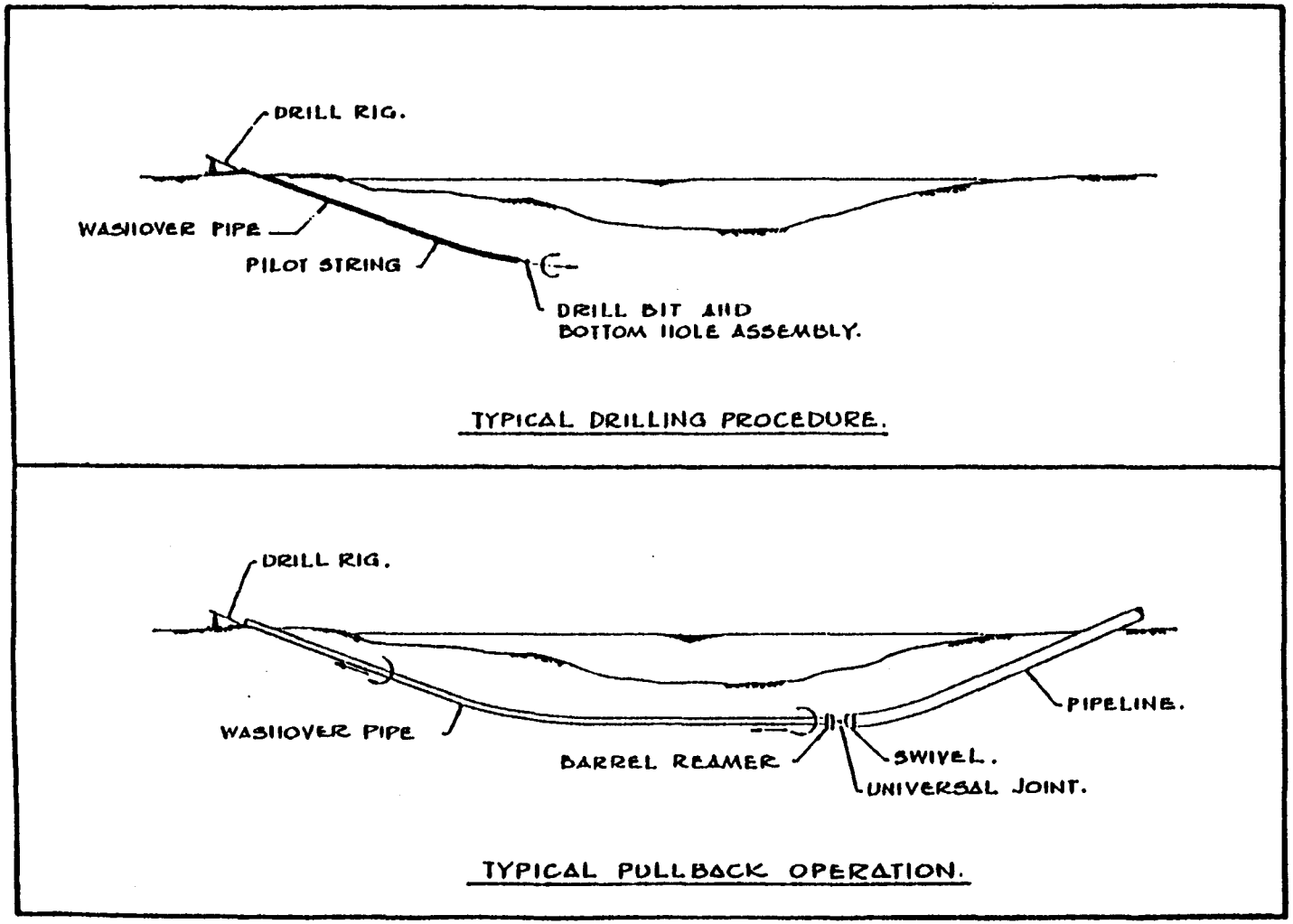

Figure 5: Typical Directional Drilling and Pullback Procedure

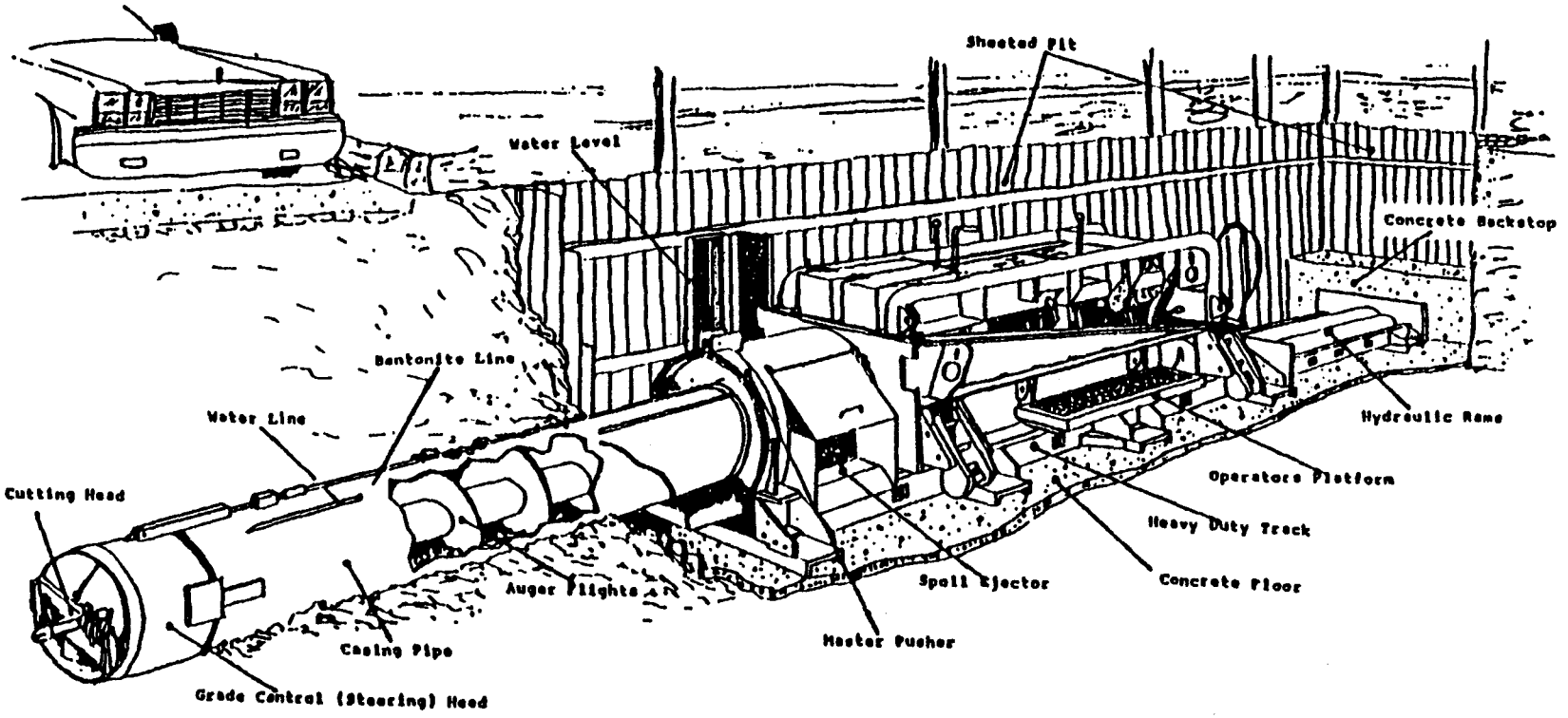

Figure 3: Track Type Auger Boring Machine

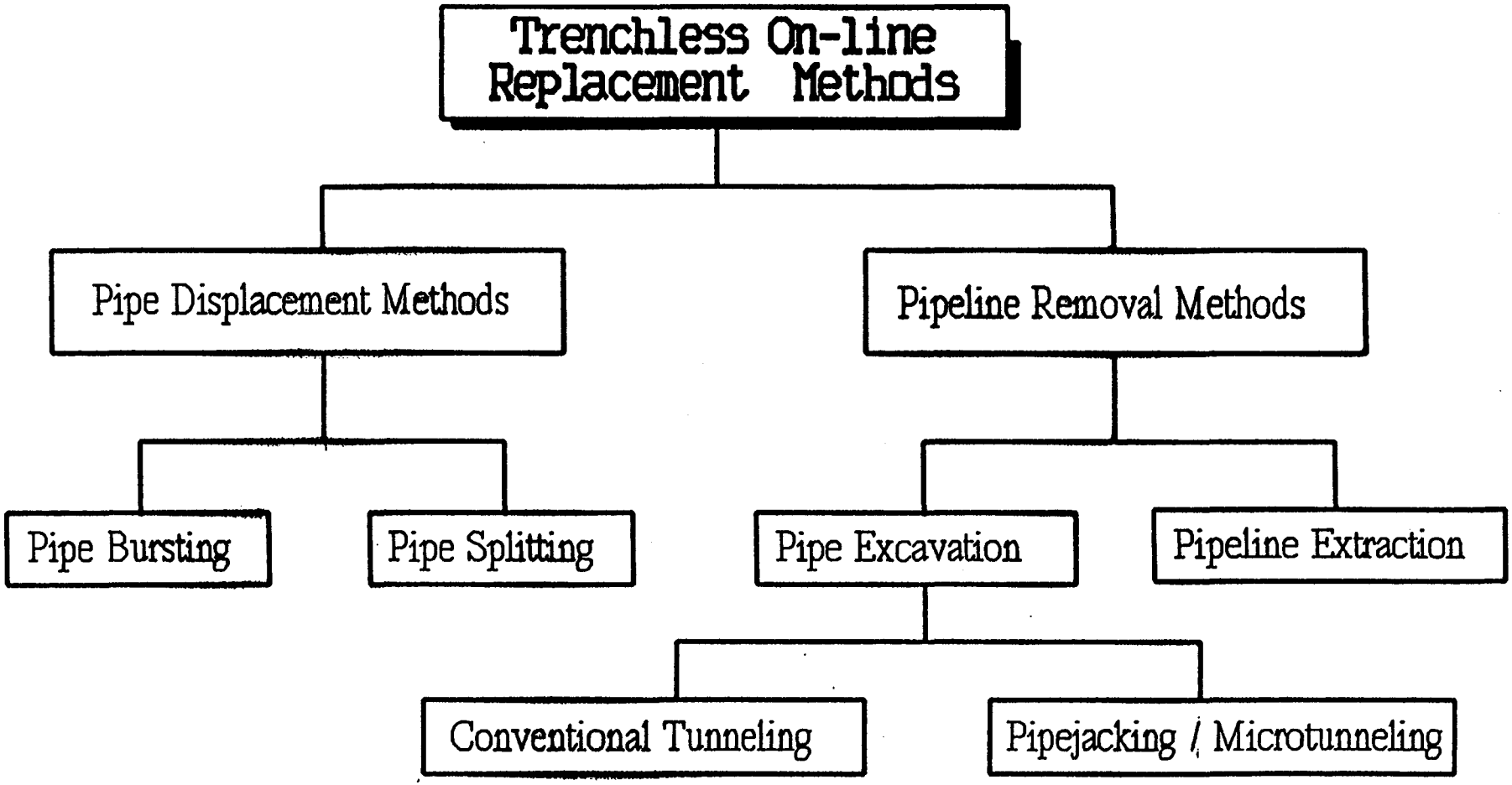
Trenchless On-line Replacement Methods
Pipe Displacement Methods
Pipeline Removal Methods
Pipe Bursting
Pipe Splitting
Pipe Excavation
Pipeline Extraction
Conventional Tunneling
Pipejacking / Microtunneling

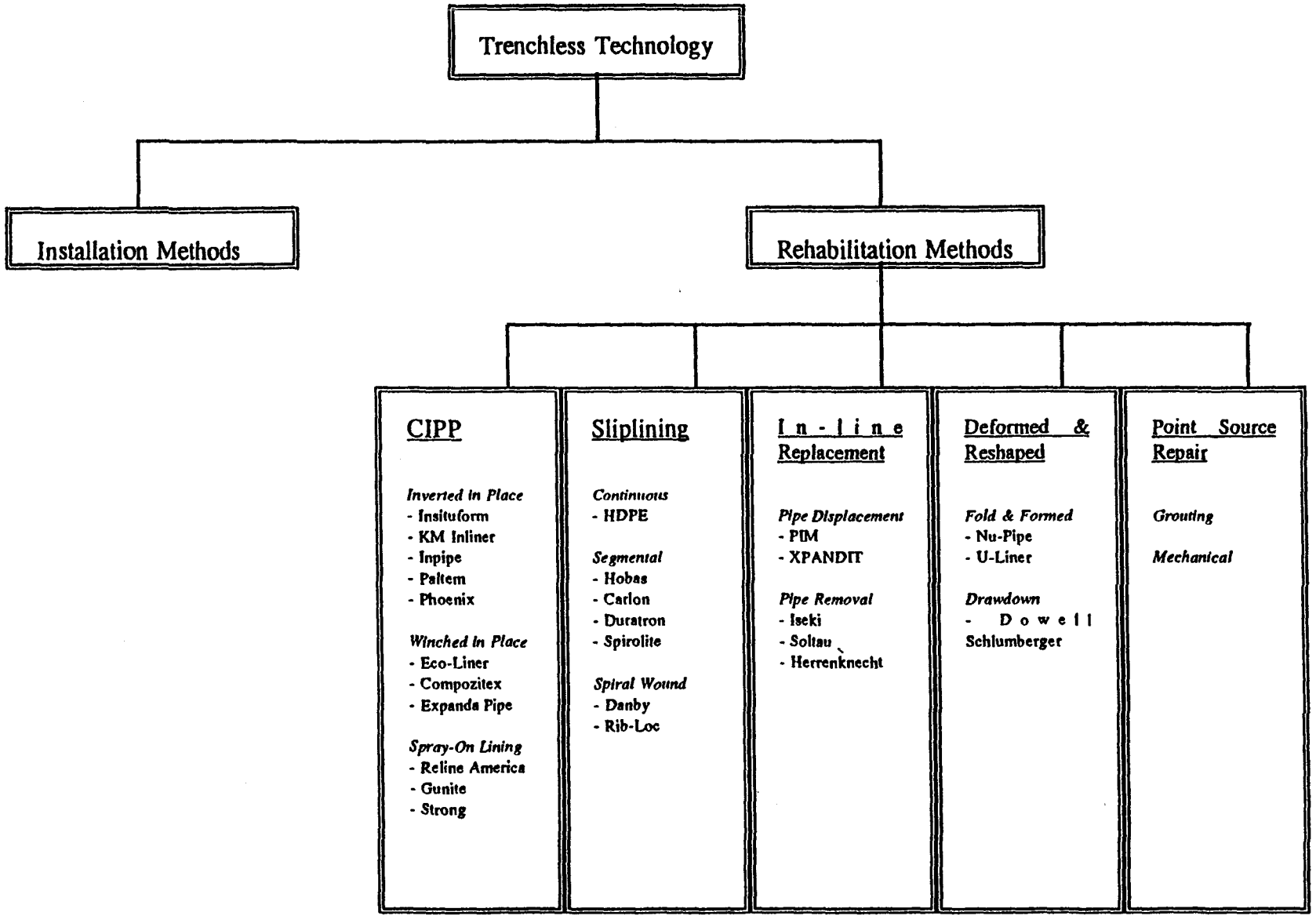

Figure 2: Rehabilitation Methods Classification

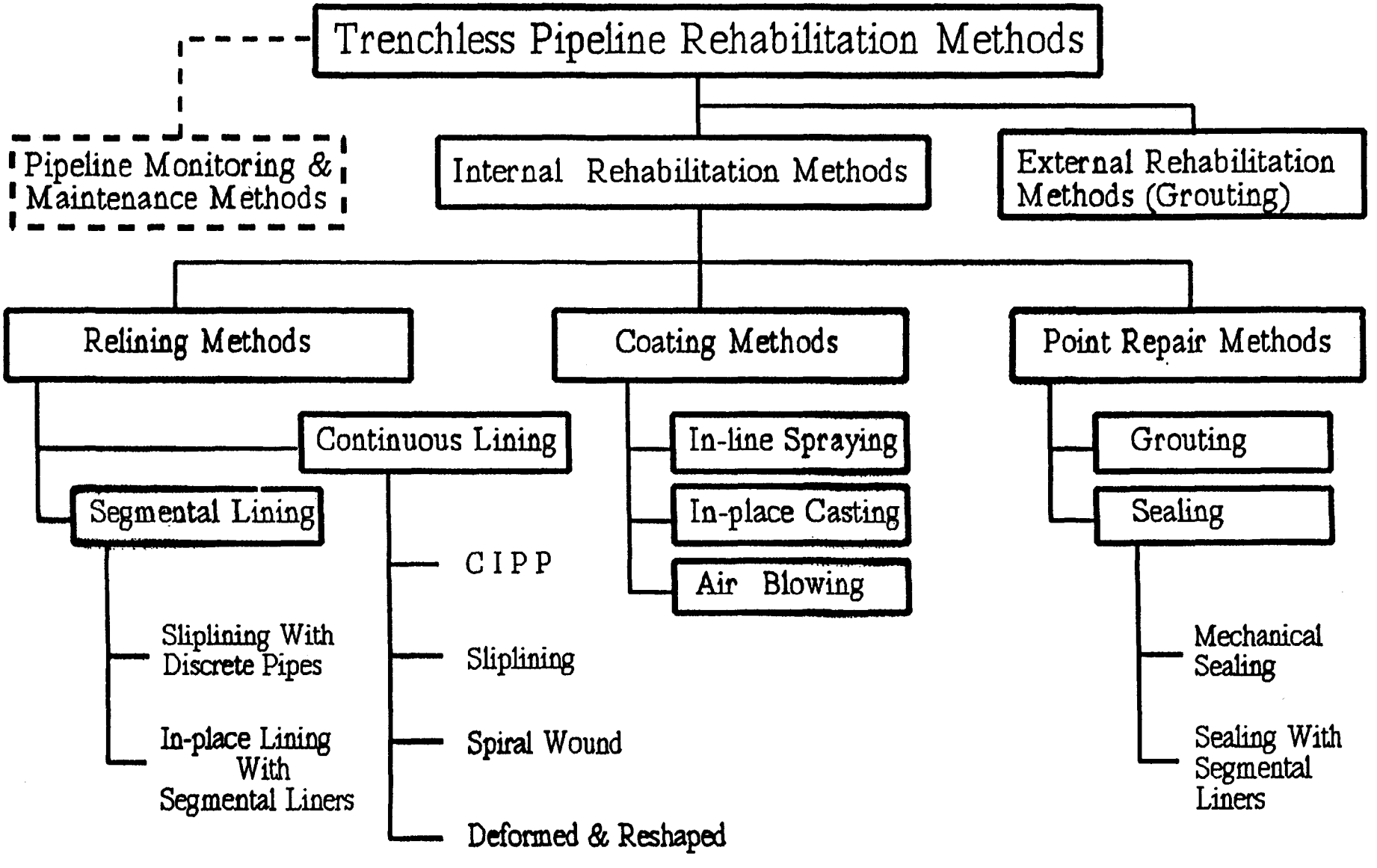
Trenchless Pipeline Rehabilitation Methods
Pipeline Monitoring & Maintenance Methods
Internal Rehabilitation Methods
External Rehabilitation Methods (Grouting)
Relining Methods
Coating Methods
Point Repair Methods
Continuous Lining
Segmental Lining
CIPP
Sliplining
Spiral Wound
Deformed & Reshaped
Sliplining With Discrete Pipes
In-place Lining With Segmental Liners
In-line Spraying
In-place Casting
Air Blowing
Grouting
Sealing
Mechanical Sealing
Sealing With Segmental Liners

Quench Protection

by
Karl Koepke

Fermilab

Annual APS Meeting
Indianapolis
May 2,1996

Quench Protection for Superferric Magnet with Single Power Bus

Karl Koepke
Fermilab

G.W.Foster 11/9/95

Double-"C" Twin Bore Magnet

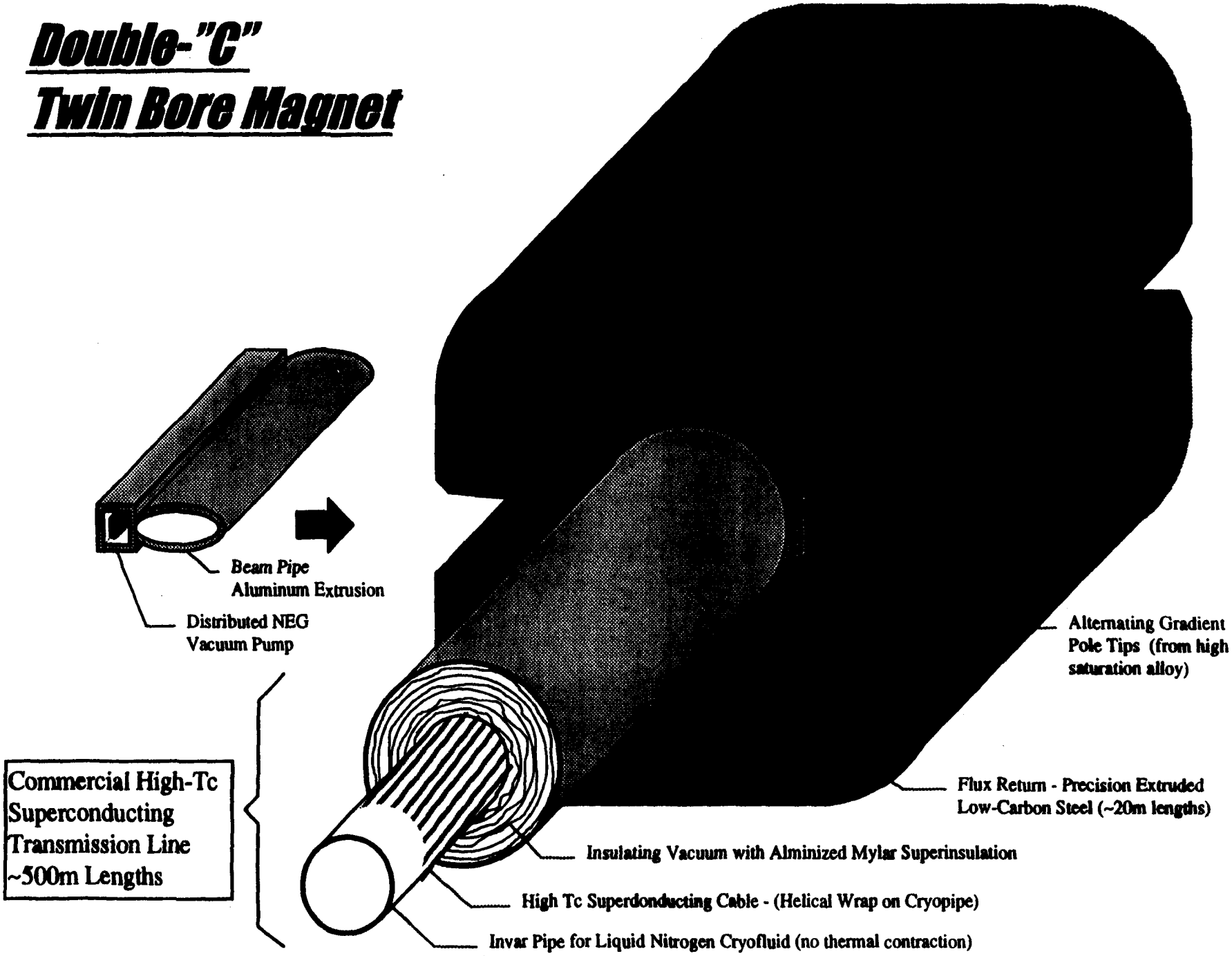

Magnet System Parameters

Type of superconductor, operating temperature and cable geometry are not specified as improvements in superconducting conductors may make presently available conductors obsolete. The following generic quench protection analysis assumes:

Cable

- Superconductor current density >6000 A mm^{-2}
- Cable copper area $\cong 1$ cm^2

Magnet

- Peak dipole field = 2 T
- Peak magnet current = 60 kA (1.5/3 cm vert/hor gap)
- Circuit inductance/m = 2μH/m (magnet + return bus)

Ring

- Peak proton energy/ring = 100 TeV
- Magnet ring circumference=1047 km (100% packing)

Quench Limits:

- Peak temperature = 500 K
- Peak voltage to ground = 2 kV

Quench Temperature and MIITs

Diffusion equation states conservation of energy per unit volume of cable as:

$$\gamma c \frac{\partial T}{\partial t} = K \nabla^2 T + \text{watts/unit volume}$$

γ = density
c = spec. heat
K = thermal cond.

Adiabatic approximation neglects heat conduction and simplifies equation:

$$\int_0^\infty I^2 dt = A^2 \int_{T_q}^{T} \frac{\gamma c}{\rho} dT$$

$$MII^2 s \equiv 10^{-6} \int_0^\infty I^2 dt$$

ρ = resistivity
I = current
A = cross section area

For a superconducting cable, the integral on right must be performed for each constituent of the cable including insulation and cryogen.

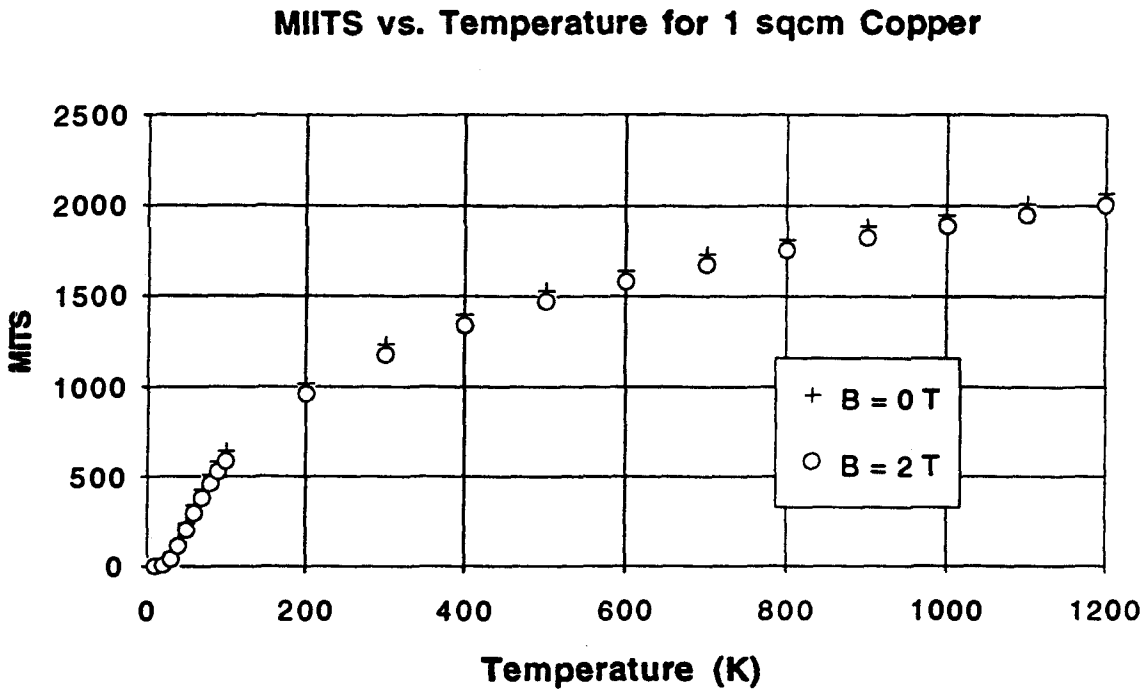

NbTi : T = 5K MIIB(500K) ≈ 1500 A^2 (cm²)

HIGH T_c : T = 80K ? MIITS (500K) ≅ 1000 A^2

Generic Quench Protection Circuit

Superconducting magnets are distributed along forward and return bus with evenly spaced power supplies and switched series resistors to minimize voltage to ground. SCRs or cold diodes locally shunt groups of magnets to allow fast current bypass around magnets that have quenched.

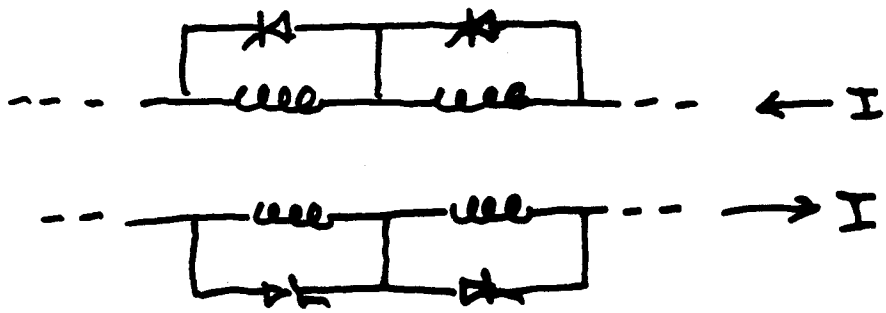

Equivalent Circuit

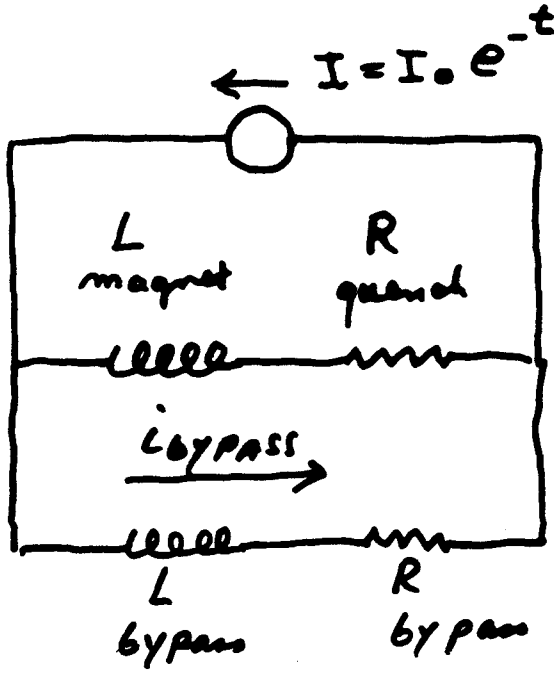

$\tau_{ring} >> \tau_{bypass}$

$t >> \tau_{bypass}$

$$i_{bypass} \approx \frac{R_Q I_0 e^{-t/\tau_{ring}}}{R_Q + R_B}$$

Power Supply and Quench Protection Circuit

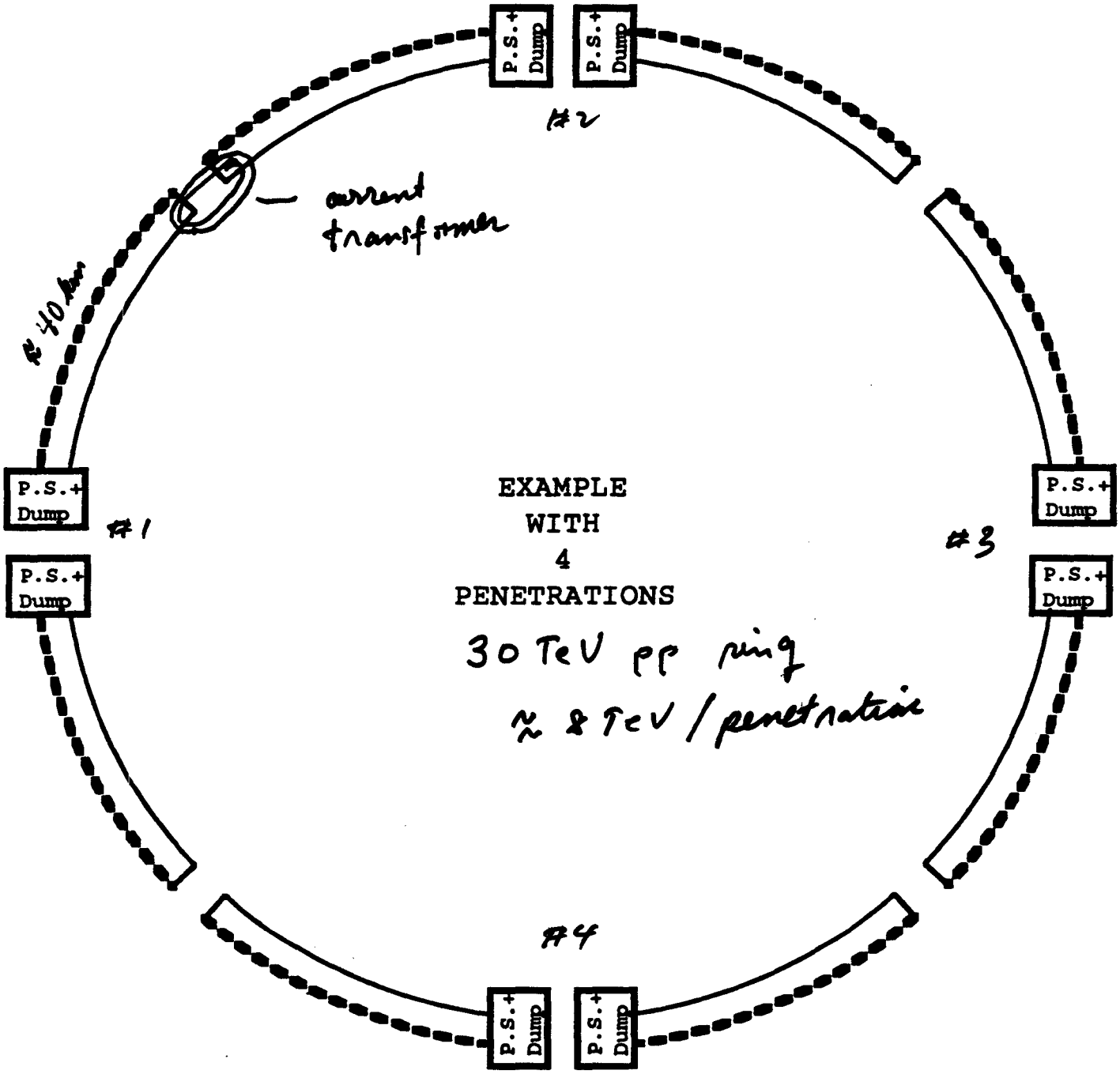

Dump Parameters
for 1/24 of 100 Tev Ring

as cryogenic system requires 12 penetrations for reasonable pipe size and cryogenic inventory.

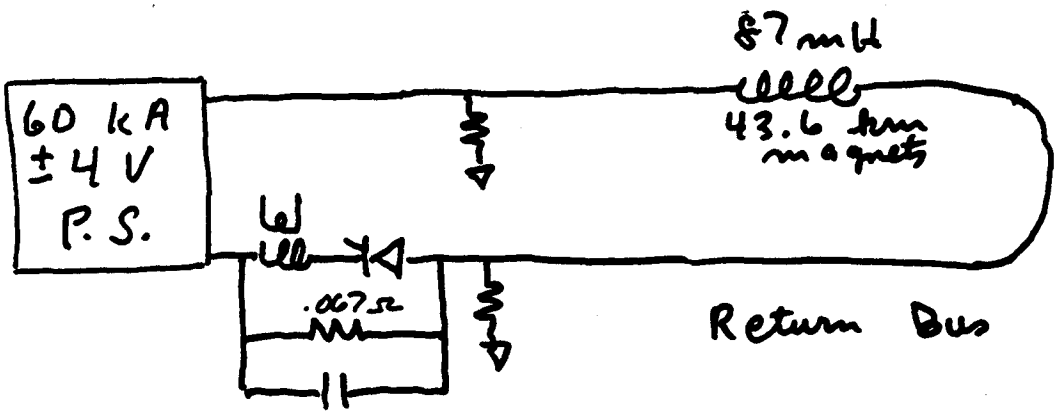

Voltage to ground:

$|V| = L I / T$

V = 4 kV (+/- 2 kV to ground)
L = 87 mH
I = 60 kA
T = 1.3 sec ←

MIITs = $I^2T/2$=2340 = 1500 A^2

A = 1.25 cm^2 ←
ϕ = 2.54 cm (copper pipe dia.)
w = .156 cm

Estimated quench voltage
(@ 60 kA, 5 K, 45 ms) = 1.5 V for NbTi

Expansion coeficient (5- 300 K) ≅ .003
Need periodic expansion joints

Design Concepts for Remote Installation and Repair

by
Mike May

Fermilab

HIGH ENERGY HADRON COLLIDER AT FERMILAB

- WE CAN BUILD A HIGH ENERGY HADRON COLLIDER NOW USING TODAY'S TECHNOLOGY.
- BUT
- WE WANT TO BUILD THIS MACHINE IN SUCH A WAY THAT IT'S TECHNOLOGY GAINS CAN BE IMMEDIATELY AND DIRECTLY USED BY INDUSTRY
- WE WANT TO BUILD THIS MACHINE FOR A MUCH LOWER COST PER TEV THAN IT WOULD COST USING TODAY'S TECHNOLOGY.

ENGINEERING CHALLENGES

- SMALL DIAMETER TUNNELS , GOING FOR LONG DISTANCES BETWEEN DROPS. (>15KM)
- CONSTRUCTING TUNNELS IN THE EARTH TO A TOLERANCE OF +/- 5 CM.
- TUNNELS DUG USING ROBOTICS.
- ALL COMPONENTS OF THE ACCELERATOR, EXCEPT THE COLLISION HALLS AND DROP SHAFTS, INSTALLED USING ROBOTICS.
- DEVELOP FABRICATION METHODS TO PRODUCE LONG MAGNETS (1 KM IN LENGTH) TO THE TOLERANCES THAT ARE NEEDED.

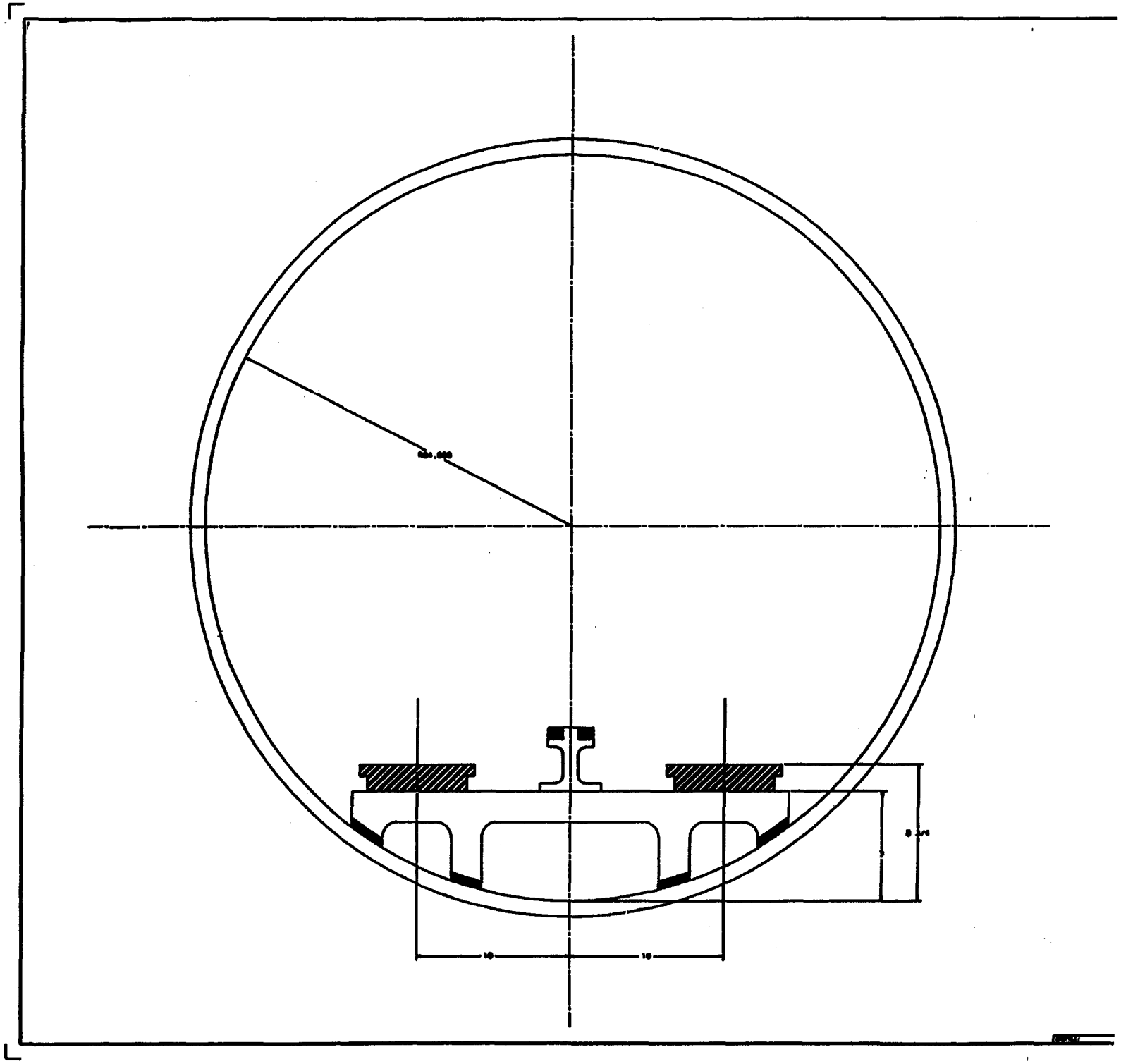

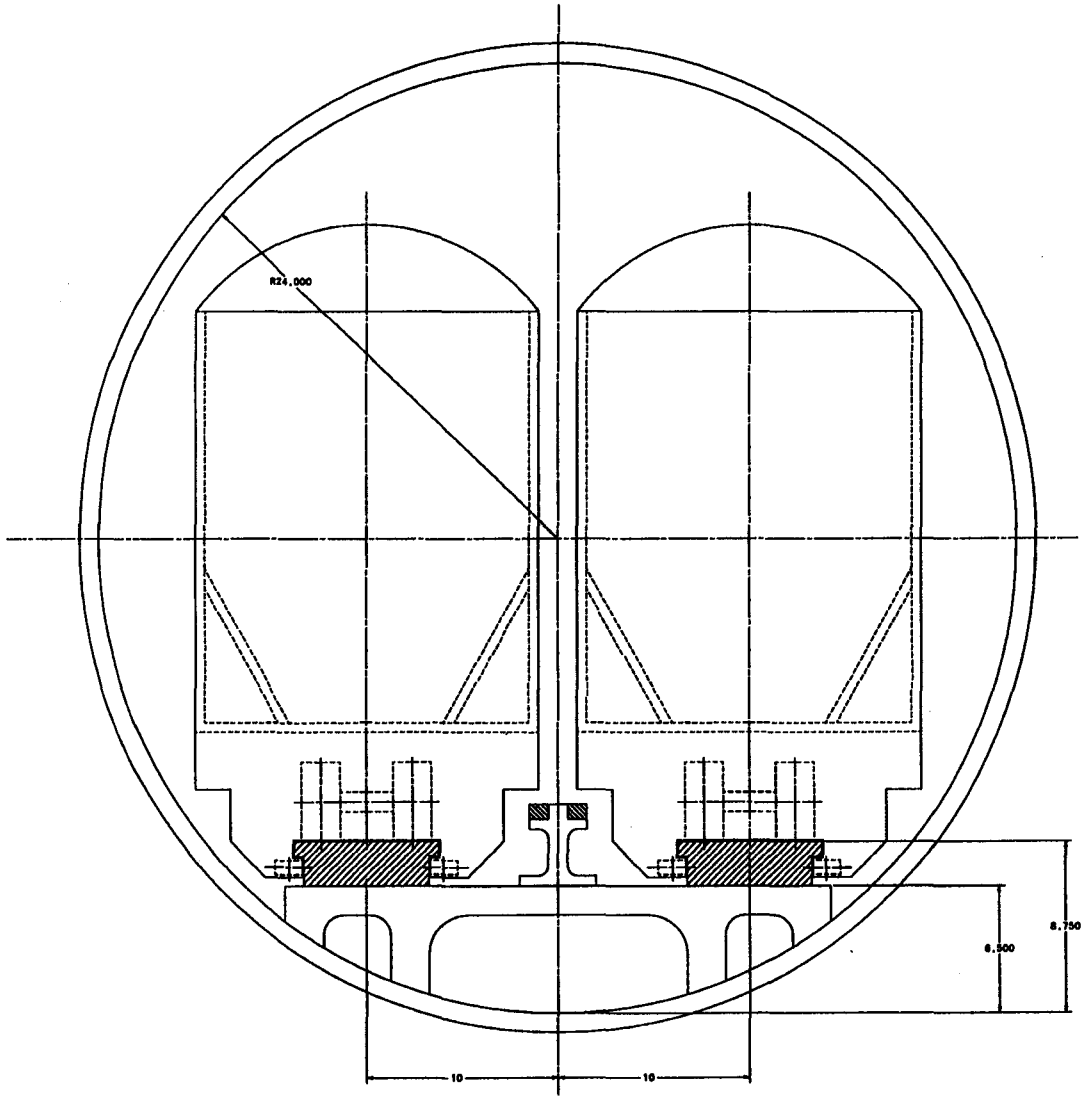

REV.	DESCRIPTION	DRAWN	DATE
		APPR.	DATE

ITEM	PART NO.	DESCRIPTION OR SIZE	QTY.
		PARTS LIST	

UNLESS OTHERWISE SPECIFIED			ORIGINATOR	
			DRAWN	
1	1	1	CHECKED	
			APPROVED	
1. DIMENSIONS SHOWN SHOWN			USED ON	
2. DO NOT SCALE DRAWING.				
3. MATERIALS AND FINISHES			MATERIAL	
4. DWG. ALL MACH. SURFACE				

FERMI NATIONAL ACCELERATOR LABORATORY
UNITED STATES DEPARTMENT OF ENERGY

SCALE	FILED	DRAWING NUMBER	SH.
		MIKE5.DWG	

CREATED WITH I-DEAS_V1 | USER NAME:

CHDFILE:

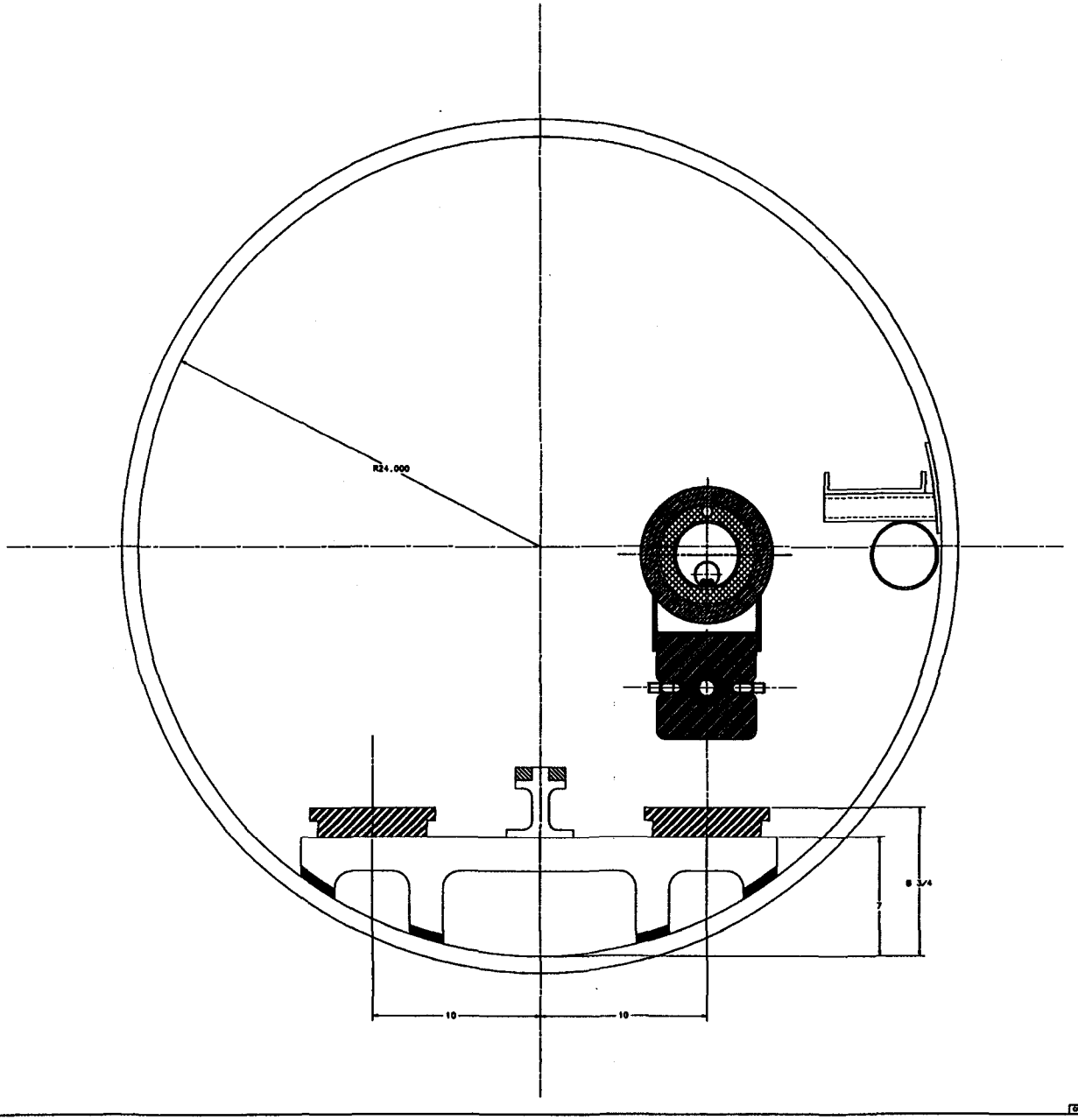

ITEM	PART NO.	DESCRIPTION OR SIZE	QTY.
		PARTS LIST	

FERMI NATIONAL ACCELERATOR LABORATORY
UNITED STATES DEPARTMENT OF ENERGY

MIKE4.DWG

CREATED WITH I-DEAS_V1

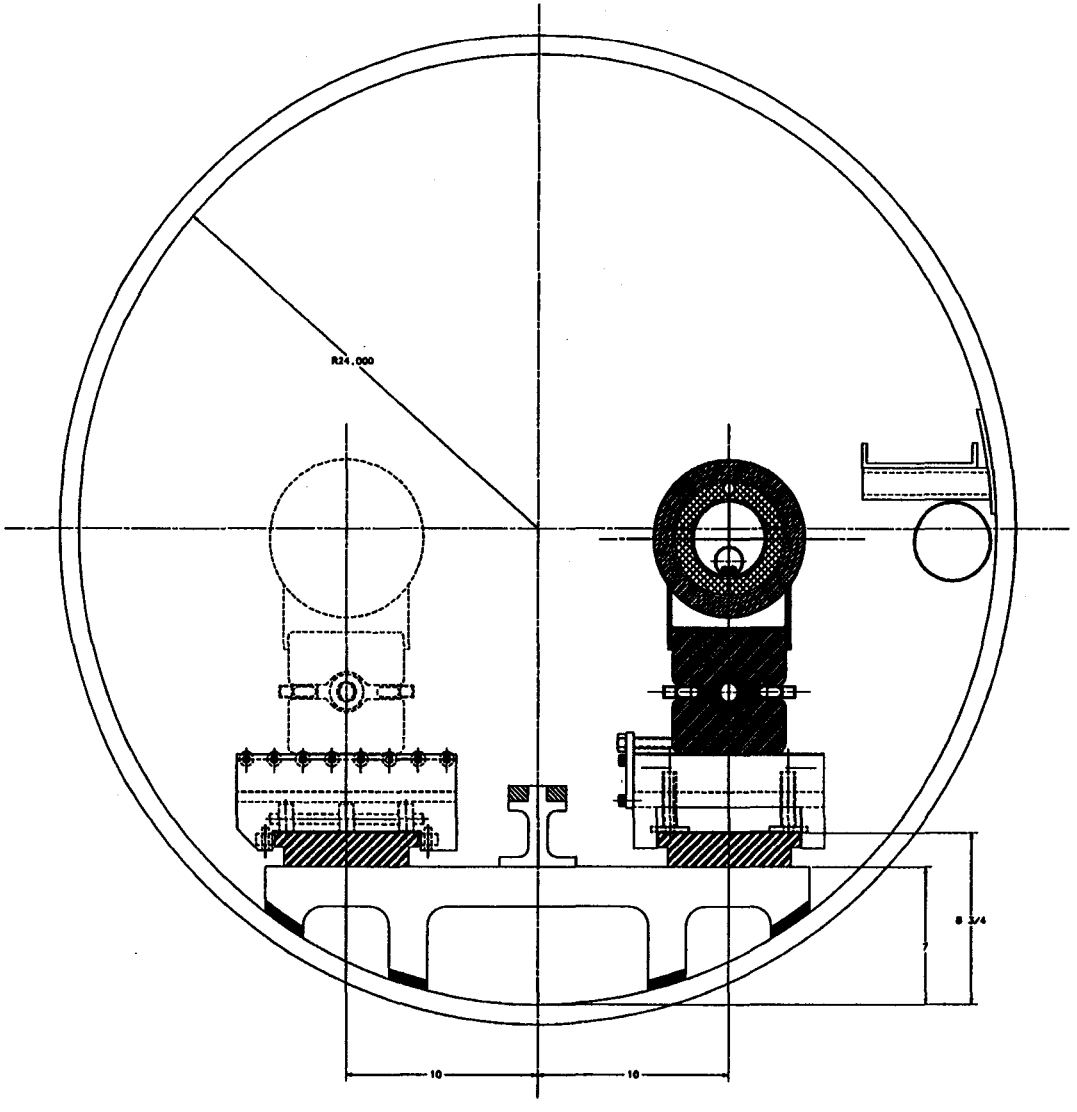

ITEM	PART NO.	DESCRIPTION OR SIZE	QTY.

PARTS LIST

FERMI NATIONAL ACCELERATOR LABORATORY
UNITED STATES DEPARTMENT OF ENERGY

MIKE3.DWG

CREATED WITH I-DEAS_V1

REV.	DESCRIPTION	DRAWN	DATE
		APPD.	DATE

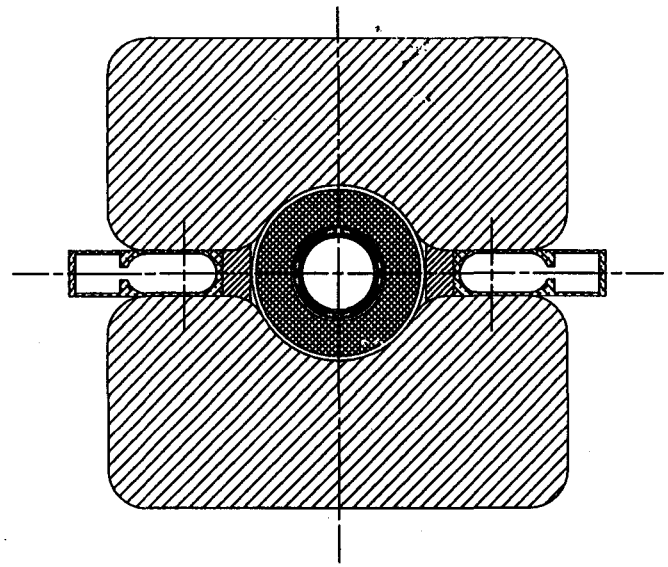

ITEM	PART NO.	DESCRIPTION OR SIZE	QTY.

PARTS LIST

UNLESS OTHERWISE SPECIFIED			ORIGINATOR		
			DRAWN		
±	±	±	CHECKED		
1. BREAK ALL SHARP EDGES 1/64 MAX.			APPROVED		
2. DO NOT SCALE DRAWING.			USED ON		
3. DIMENSIONS BASED UPON ANSI Y14.5M-1982					
4. MAX. ALL MACH. SURFACES ✓			MATERIAL		

FERMI NATIONAL ACCELERATOR LABORATORY
UNITED STATES DEPARTMENT OF ENERGY

SCALE	FILMED	DRAWING NUMBER	REV.
		MIKE8.DWG	

CADFILE:	CREATED WITH I-DEAS_V1	USER NAME:

REV.	DESCRIPTION	DRAWN / APPD.	DATE / DATE

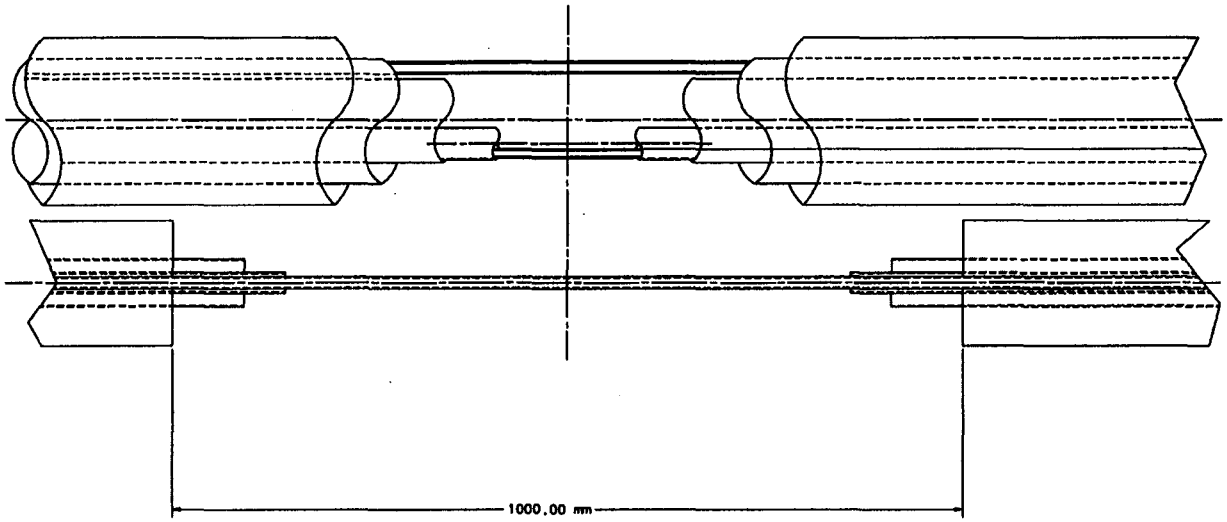

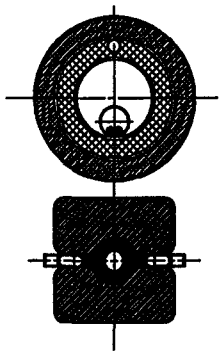

ITEM	PART NO.	DESCRIPTION OR SIZE	QTY.

PARTS LIST

UNLESS OTHERWISE SPECIFIED
1. BREAK ALL SHARP EDGES 1/64 MAX.
2. DO NOT SCALE DRAWING.
3. DIMENSIONS BASED UPON ANSI Y14.5M-1982
4. MAX. ALL MACH. SURFACES

ORIGINATOR
DRAWN
CHECKED
APPROVED
USED ON
MATERIAL

FERMI NATIONAL ACCELERATOR LABORATORY
UNITED STATES DEPARTMENT OF ENERGY

SCALE | FILMED | DRAWING NUMBER MIKE9.DWG | REV.

CADFILE:
CREATED WITH I-DEAS_V1
USER NAME:

Syncrotron Radiation in a Large, Warm-bore Collider

by
William Turner

Lawrence Berkeley National Lab

F124

Synchrotron Radiation and Beam Tube Vacuum in a Warm Bore 100x100 TeV^2 pp Collider

William C. Turner
LBNL

Mini-symposium on Low-Cost Approaches to High Energy Hadron Colliders at FNAL

Indianapolis
3 May 1996

Outline

- Synchrotron radiation
- Beam tube gas density requirements
- Photo and thermal desorption
- Beam tube pressure
- Ion desorption
- Multipactoring
- Cold tube vs warm tube
- Summary

Accelerator parameters assumed for synchrotron radiation and vacuum calculations

(Taken mostly from Neuffer memo)

$E = 100$ TeV

$B = 2$ T

$C = 1000$ km

$N_B = 2.5 \times 10^4$ bunches

$N_p = 4 \times 10^{10}$ p/bunch

$\langle\beta\rangle = 500$ m

$e_n = 10^{-6}$ m-rad

$r_w = 2$ cm beam tube radius

Synchrotron radiation

- Radiated photon intensity

$$\dot{\Gamma}(\text{photons}/\text{m}/\text{sec}) = 6.54\text{x}10^{10}\,\frac{I(\text{mA})\gamma}{\rho(\text{km})}$$

- Critical energy

$$E_c(\text{eV}) = 2.96\text{x}10^{-10}\,\frac{\gamma^3}{\rho(\text{km})}$$

- Radiated power

$$\frac{P}{2\pi\rho}(\text{W}/\text{m}) = 9.6\text{x}10^{-19}\,\frac{\gamma^4 I(\text{mA})}{\rho^2(\text{km})}$$

- Energy loss/turn

- Radiation damping time

Numerical estimates of synchrotron radiation

	200 TeV pp collider	LHC	PEPII-HER
$\dot{\Gamma}$(photons/m/sec)	2×10^{15}	9.6×10^{16}	7.0×10^{18}
E_c(keV)	2	.046	9.8
$P/2\pi\rho$(W/m)	0.21	0.22	3,400
P(kW)	221	3.7	3,500
ΔE/turn(MeV)	4.7	.067	3.6
τ_0	20.7 hrs	26 hrs	18.4 ms

- Photon intensity in the 200 TeV pp collider is relatively weak compared to contemporary proton and electron rings - however there is a competition between

Low photon intensity		High photon intensity
Low PSD gas load	vs	High initial PSD gas load
Slow cleanup		Fast cleanup

Detailed calculations are needed to establish pumping feasibility

- Radiation damping only weakly affects 200 TeV pp collider beam dynamics, low emittance injectors and emittance preservation are needed

Bounds on beam tube gas pressure

- Physics operation

  (1) beam gas particle loss, nuclear scattering

$$\frac{1}{\tau_{bg}} = \sum_j \bar{n}_j \sigma_{pj} c$$

  (2) emittance growth, multiple Coulomb scattering

$$\frac{1}{\tau_{\varepsilon g}} = \frac{c\bar{\beta}}{\varepsilon}\left(\frac{15}{cp(\mathrm{MeV})}\right)^2 \sum_j \frac{1}{X_{0j}}$$

- Conditioning

  (3) cryo plant capacity ~ e.g. 0.1 W/m scattered beam power

  (4) quench limit ~ e.g. 1 W/m scattered beam power

$$\frac{dP}{dz} = I_b E_b \sum_j n_j \sigma_{pj}$$

Numerical bounds on beam tube gas pressure

- Physics operation

  (1) beam gas particle loss lifetime = 100 hrs

  (2) emittance growth time = 50 hrs

- Conditioning

  (3) cryo plant capacity ~ 0.1 W/m scattered beam power (what if)

  (4) quench limit ~ 1 W/m scattered beam power (what if)

gas	σ_{pj} mb	X_{0j} gm/cm^2	(1) $\bar{P}_j$ nTorr	(2) $\bar{P}_j$ nTorr	(3) $\bar{P}_j$ nTorr	(4) $\hat{P}_j$ nTorr
H_2	120	63.3	23	89	54	540
CH_4	648	46.7	4.3	8.2	10	100
H_2O	690	36.3	4.1*	5.7	9.3	93
CO	1014	37.7	2.8	3.8	6.4	64
CO_2	1584	36.4	1.8	2.3	4.1	41

*requires mild baking

Beam tube pressure

- $P_j = \frac{\eta_j * \dot{\Gamma} + \dot{Q}'_{wj}}{S_j}, j = H_2, CH_4, CO, CO_2$

- Assume Al is the beam tube material

- μ > 300 cm^2/gm for E_c = 2.2 keV, Pb shielding not necessary

- Photodesorption coefficients η_j modeled after DCI LEP experimental data, Al beam tube, E_c = 2.9 keV. (Mathewson et al, AIP Conf. Proc.,236,313(1990))

$$\eta = \eta_1, \qquad \Gamma \le \Gamma_1$$

$$= \frac{\eta_0}{\left(\frac{\Gamma}{\Gamma_0}\right)^a}, \quad \Gamma \ge \Gamma_1$$

- Thermal outgassing rates taken from LEP data, Al chamber, 24 hr, 150°C in situ bake.(Mathewson et al, CERN Vac Tech Note 95-22)

- Distributed pumping speeds S_j assumed which are reasonable based on LEP(NEG+LIP) and PEPII(DIP) experience

Thermal outgassing rates and pumping speeds

- LEP Al chamber, baked in situ 24 hrs 150°C (Mathewson et al, CERN Vac Tech Note 95-22)

- Pumping speeds assumed for vacuum estimates (based on LEP(NEG) and PEPII(DIP) results)

gas	$\dot{Q}$ Torr-l/sec-cm2	S l/sec-m
H_2	5×10^{-13}	200
CH_4	5×10^{-15}	20(DIP) 1(NEG+LIP)
H_2O	$< 1 \times 10^{-15}$	-
CO	1×10^{-14}	100
CO_2	1×10^{-14}	80

Beam tube pressure versus integrated photon flux, NEG+LIP approach

24 Apr. 1996

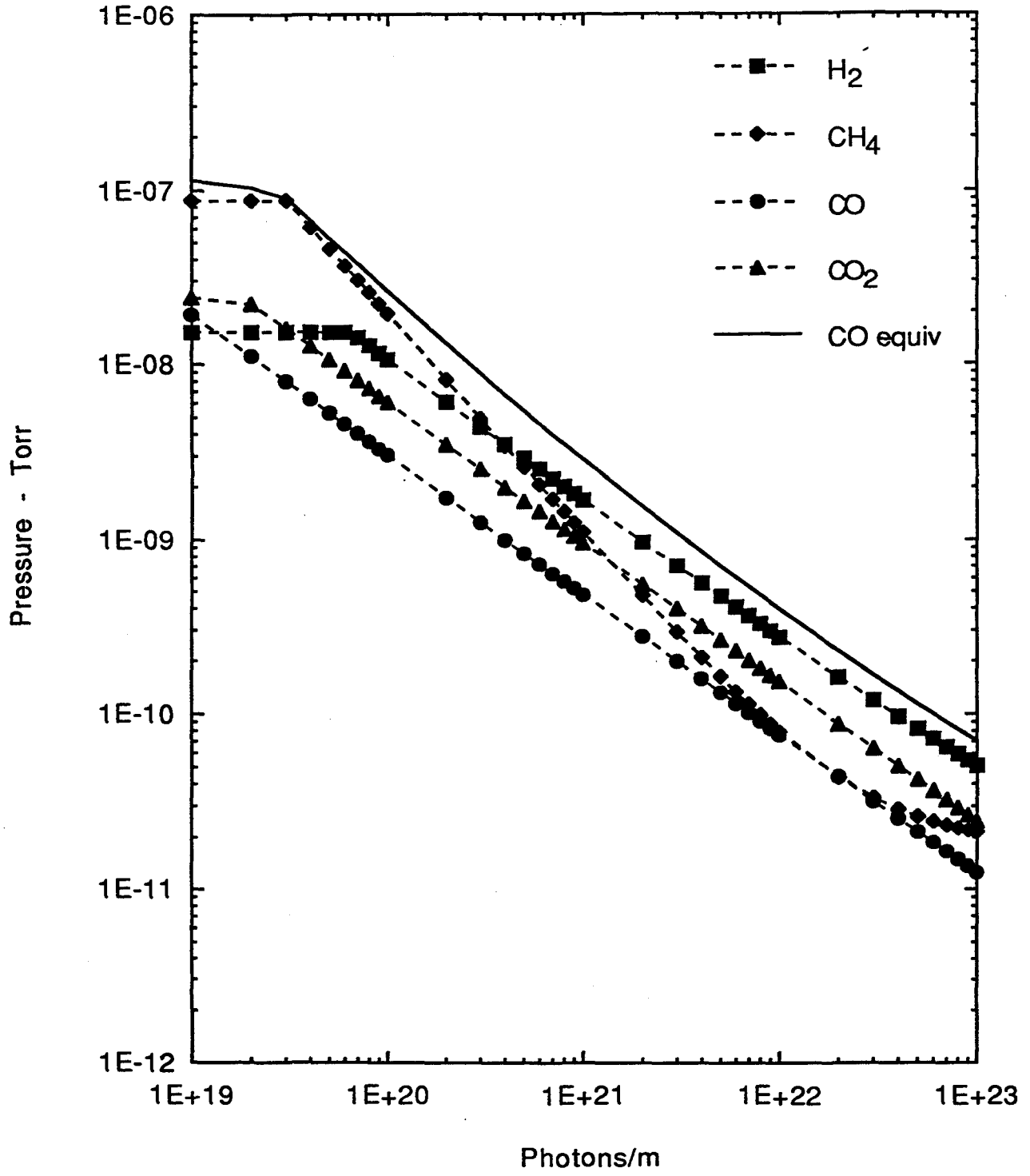

Beam tube pressure versus integrated photon flux, DIP approach

25 Apr. 1996

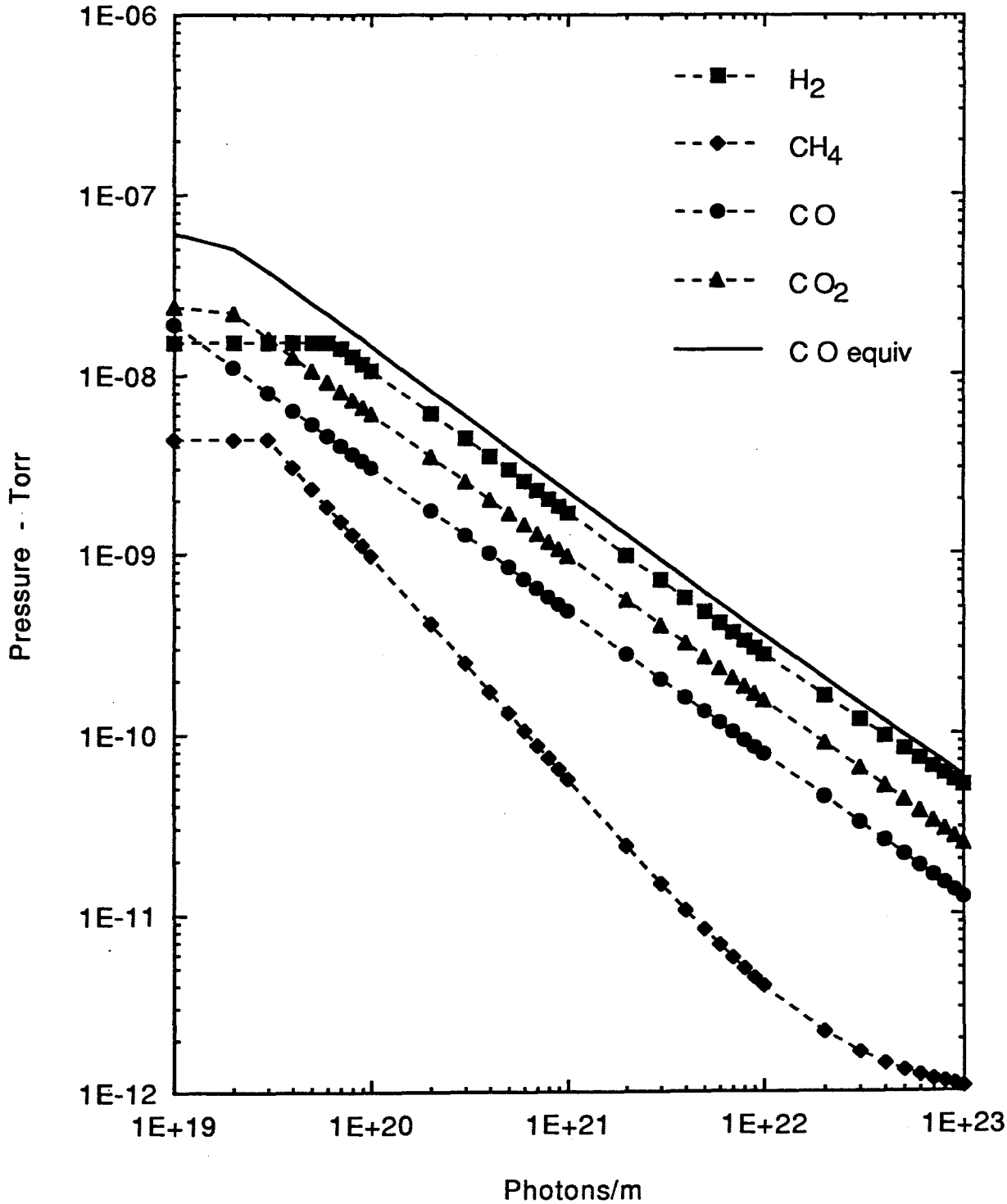

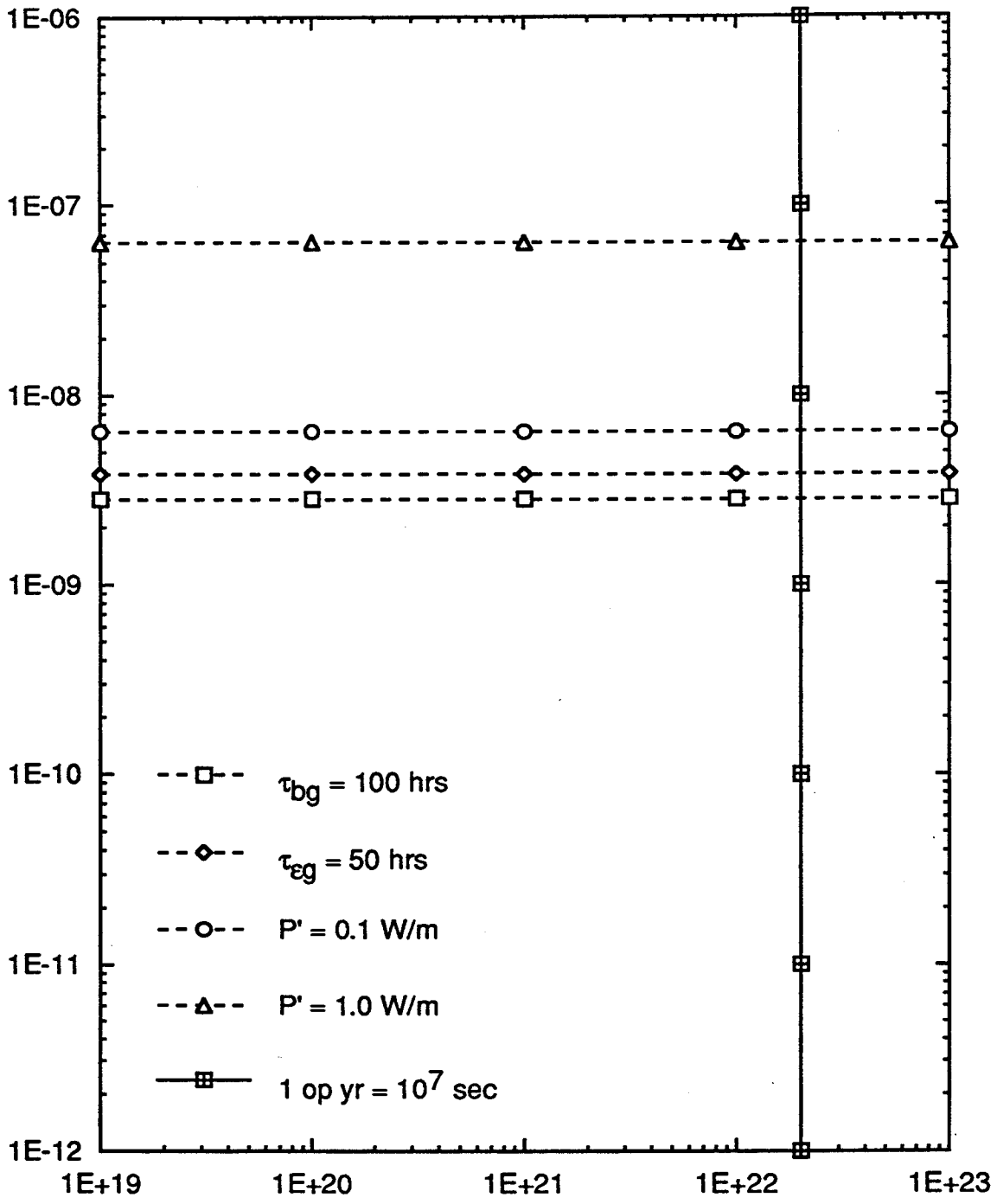
1E-06
1E-07
1E-08
1E-09
1E-10
1E-11
1E-12
1E+19
1E+20
1E+21
1E+22
1E+23
τ_{bg} = 100 hrs
$\tau_{\varepsilon g}$ = 50 hrs
P' = 0.1 W/m
P' = 1.0 W/m
1 op yr = 10^7 sec

Projected "cleanup" of photodesorption coefficients in a 200 TeV proton collider

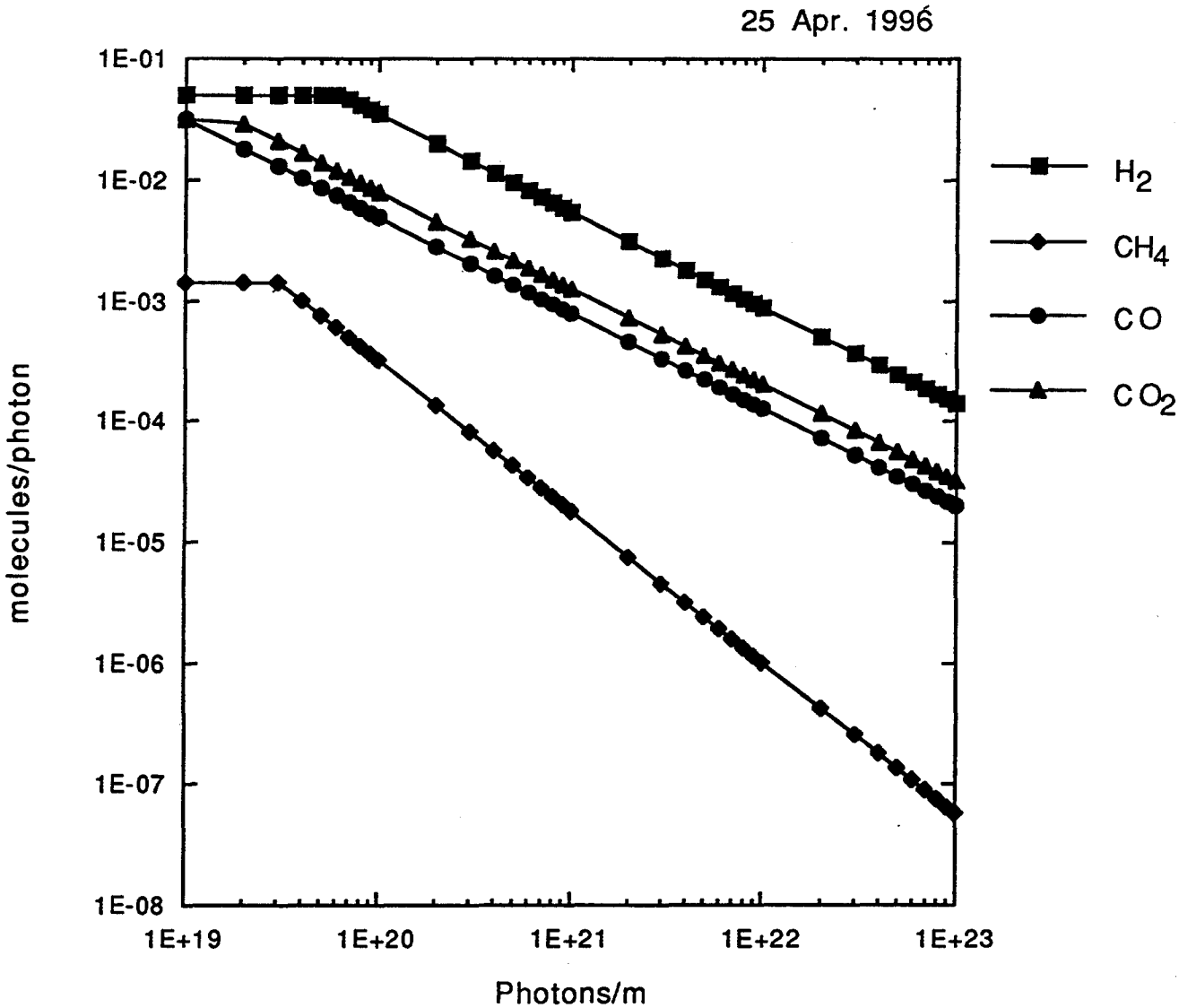

- The decrease in photon intensity in a large proton ring compared to contemporary electron storage rings is compensated by a slower cleanup rate, so similar linear pumping speeds (~100 Torr-L/sec) are required for example in the PEPII HER and in a 200 TeV proton collider.

- Total desorbed gas loads are small compared to DIP or NEG capacities. At $\Gamma = 10^{23}$ photons/m ~ 5 op yrs, Q' = 1.76, 6×10^{-3}, 0.27 and 0.42 Torr-l/m for H_2, CH_4, CO and CO_2 respectively.

There appear to be very large margins for ion desorption stability

- Diagonal elements $\eta_i(m_j^+, m_j) * I < \dfrac{eS_j}{\sigma_{pi}(m_j)}$

- Ion impact energy < 60 eV for H_2^+, < 20 eV for CO+, desorption coefficients taken at 100 eV.

species	$\eta_i(m_j^+, m_j) * I$ Amps	$eS_j / \sigma_{pi}(m_j)$ Amps
H_2^+, H_2	.01	725
CH_4^+, CH_4	?	13 (0.6)
CO^+, CO	1.0	73
CO_2^+, CO_2	?	37
CO^+, CH_4	.007	-

Ion energy versus radial position at the head of successive proton bunches

29 Apr. 1996

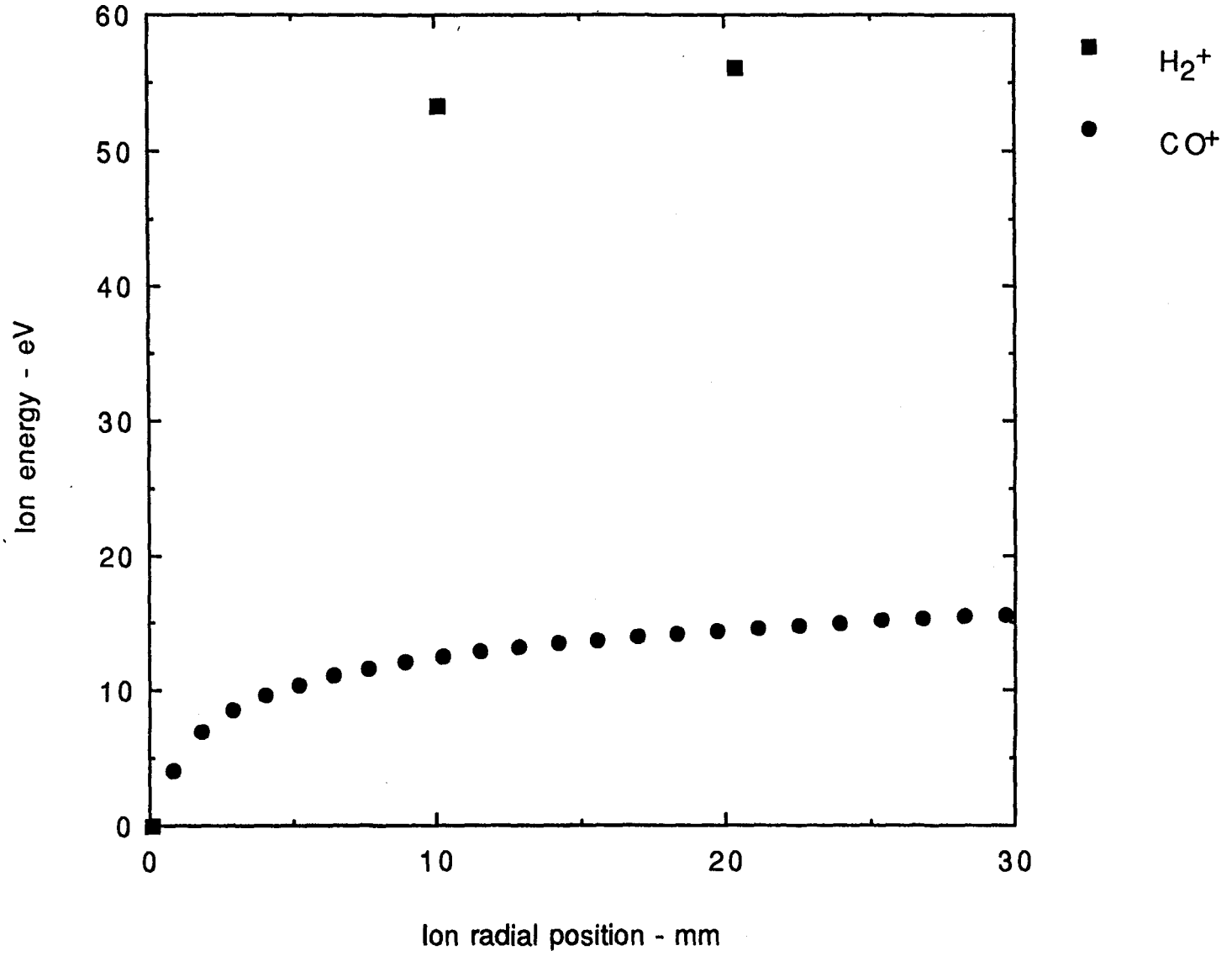

Beam induced multipactoring

- Condition for instability:

resonance

$$I_{avg} * \left(\frac{T}{r_W}\right)^2 = \frac{4\pi}{Z_0}\frac{m}{e}$$

$$= 1.9 \times 10^{-13}\ \mathrm{Amp-sec^2/m^2}$$

+

secondary electron yield $\delta > 1$

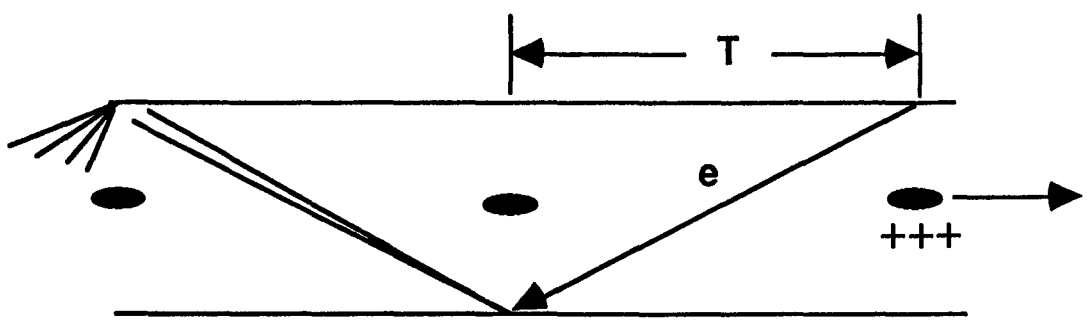

Likelihood of beam induced multipactoring is low

- Typical 200 TeV pp parameters are far above resonance

$I_{avg} = .05$ A

$T = 140$ nsec => $I_{avg} * \left(\frac{T}{r_w}\right)^2 = 2.3 \times 10^{-12}\,\mathrm{Amp-sec^2/m^2}$

$r_w = 2$ cm

- Energy kick to an electron at the wall, $\Delta E = 34$ eV, is only marginally above $\delta = 1$ for Al.

- Drift time of ~ 1 eV secondary e's across the beam tube is short compared to T=140 nsec between bunches

- Much more new information will be available upon completion of the PEPII LER and LHC.

Hi B cos(θ) cold bore and lo B superferric warm bore collider vacuum systems are different in almost every detail but likely to be cost neutral

- Cold bore with T < 3K provides an ideal pump for all desorbed gases and if equipped with cryosorber for the H_2 isotherm up to T ~ 15 K

- However a cold bore requires a liner (warm but not at room temp.) or equivalent to prevent recycling of weakly bound physisorbed gases by synchrotron radiation and to absorb the synchrotron radiation power with reasonable Carnot efficiency

- The LEP(warm bore, NEG+LIP) and LHC(2K cold bore, 4-20K liner) beam tube vacuum systems have nearly equal cost

Summary

- Either DIP or NEG + LIP vacuum systems look technically feasible for the 200 TeV superferric warm bore pp collider

- Beam tube conditioning times to achieve vacuum limited luminosity lifetime > 100 hrs and scattered beam power < 0.1 W/m globally and 1 W/m locally are reasonably short

(the precise limits on scattered beam power allowed by the sc transmission line need investigation)

- There appear to be large safety margins for ion desorption stability and beam induced multipactoring

Low Cost Warm Bore Vacuum Chamber Options

by
Hajime Ishimaru

National Laboratory for
High Energy Physics, KEK
Japan

CONCEPTUAL DESIGN STUDY FOR A VERY LOW-COST AND HIGHLY RELIABLE ALUMINUM ALLOY VACUUM PIPE IN A HIGH ENERGY LOW-FIELD COLLIDER

Hajime ISHIMARU

KEK National Laboratory for High Energy Physics, JAPAN
1-1 Oho, Tsukuba, Ibaraki 305 Japan
ishimaru@kekvax.kek.jp

Mini-Symposium; New Low-Cost Approaches to High Energy Hadron Collider at Fermilab
APS Annual Meeting Indianapolis, May 2-5, 1996

COST EFFECTIVE BEAM PIPE REQUIREMENTS:

1) **Extremely low cost.**
2) **Extremely high reliability.**
3) Simple operation.
4) Reduce risk.
5) Remote handling robots to replace magnets and beam pipe inside the tunnel.

Reduce cost drastically

New idea is:

NO – Bellows

beam pipes

BENEFITS OF ALUMINUM

1) **Extrusion with complicated profile** is possible.

2) An outgassing rate of approximately 10^{-13} Torr/l s cm^2 can be achieve utilizing **chemical cleaning process** procedure at 70°C, 1 hour mild baking during activation for NEG strip of 350°C.

3) Aluminum has very **high durability to melt-down failure** since the energy loss, dE/dx is proportional to material density, and atomic number squared of material z^2.

   Thus, localized high heat flux for aluminum is more than several magnitudes higher copper, titanium or stainless steel.

4) Have low residual radioactivity.

Principle of Chemical Baking

$$\underline{2AX} + H_2O \longrightarrow A_2O + HX \uparrow$$

Water Decomposing Reagent

$$\underline{COF_2} + H_2O \longrightarrow CO_2 \uparrow + 2HF \uparrow$$

Carbonyl Fluoride

$$\underline{DCP} + H_2O \longrightarrow \underline{(CH_3)_2C{=}O} \uparrow + HCl \uparrow$$

2,2-Dichloro Propane

Acetone

Pressure

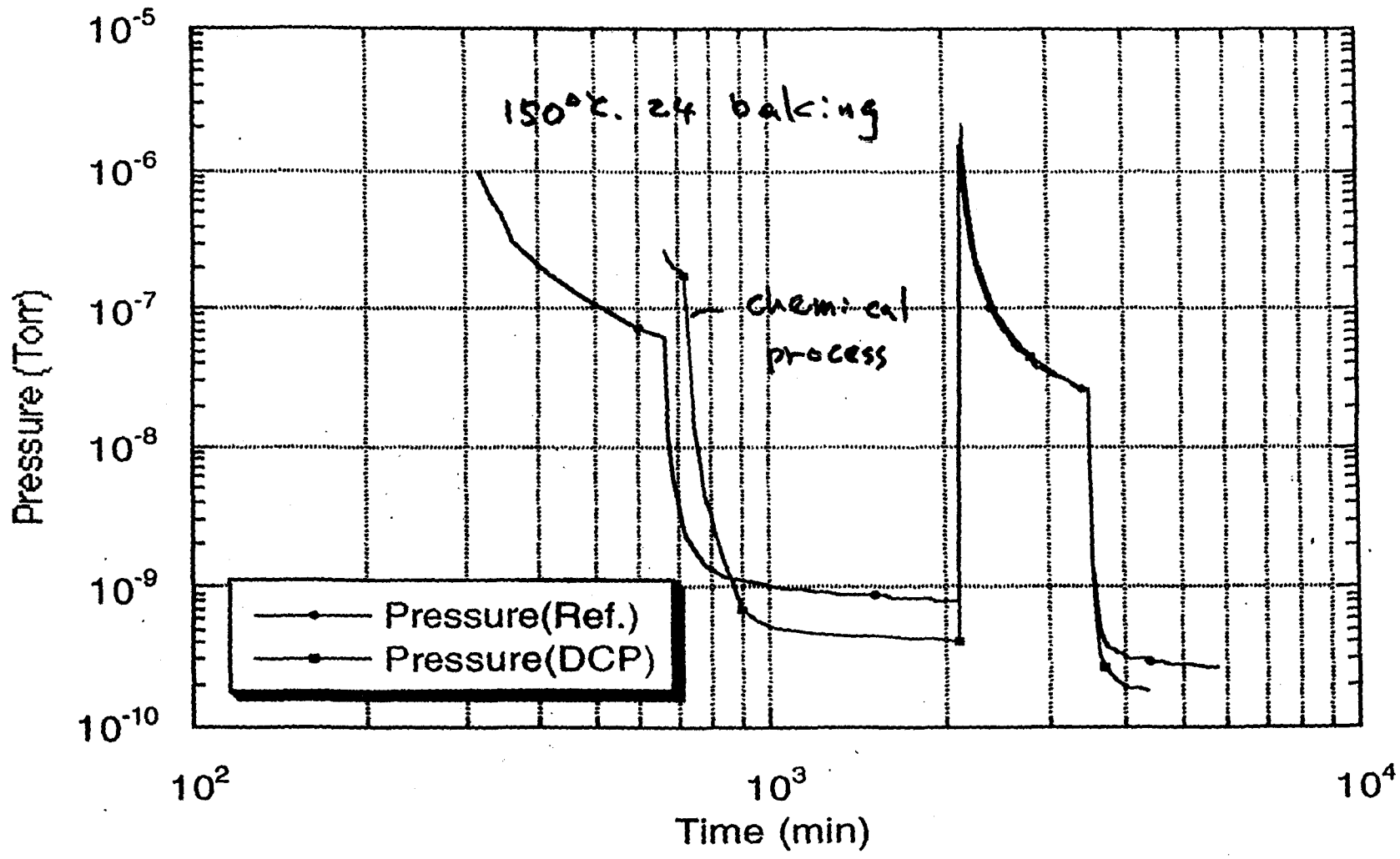
150°C. 24 baking
chemical process
Pressure(Ref.)
Pressure(DCP)
Pressure (Torr)
Time (min)
10^{-5}
10^{-6}
10^{-7}
10^{-8}
10^{-9}
10^{-10}
10^{2}
10^{3}
10^{4}

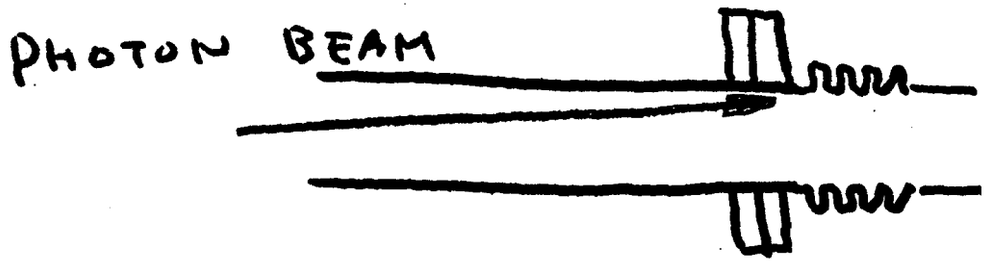

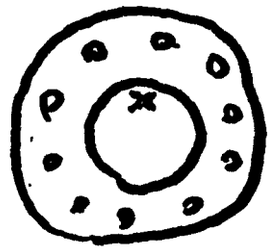

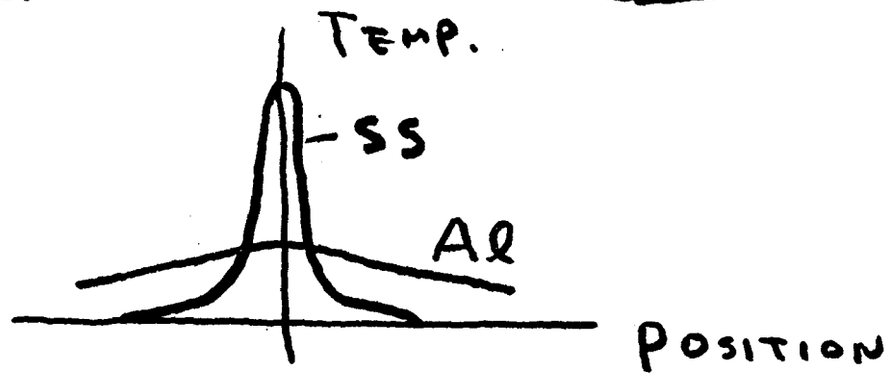

Photon beam lines

TRISTAN accumulation ring Al photon beam line

localized high heat flux:

no melt-down of bellows

no fine leak of the flanges

ENERGY LOSS FOR HIGH ENERGY BEAMS PROPORTIONAL TO MATERIAL DENSITY AND ATOMIC NUMBER

Material	ρ	z	ρz^2	ratio	k
Be	1.8	4	29.4	1	152
Al	2.7	13	456	15.5	203
Ti	4.5	22	2178	74	17
Cu	8.9	29	7484	254	403
SUS	8.0				16
Fe	7.8	26	5272	179	83
Cr	7.2	24	4147	141	73
Ni	8.8	28	6899	234	62

HOW TO REDUCE COST WITH HIGH RELIABILITY

To increase reliability and reduce risk, a **simplified beam pipe** is proposed.

Cost savings come from a reduction in number of components and less labor cost.

Vacuum leakage of an ordinary beam pipe is normally caused by flanges and bellows which also decrease the reliability of the system.

To eliminate leakage and reduce cost, it is proposed that **a simple extruded aluminum alloy beam pipe of 500 m long be constructed without flanges and bellows.**

In Japan, the super-express train, SHINKANSEN is all welded without gaps between rails. The rail has been designed to accommodate inner expansion and compression stress during temperature rise and fall. **This situation closely represent the condition of the collider.**

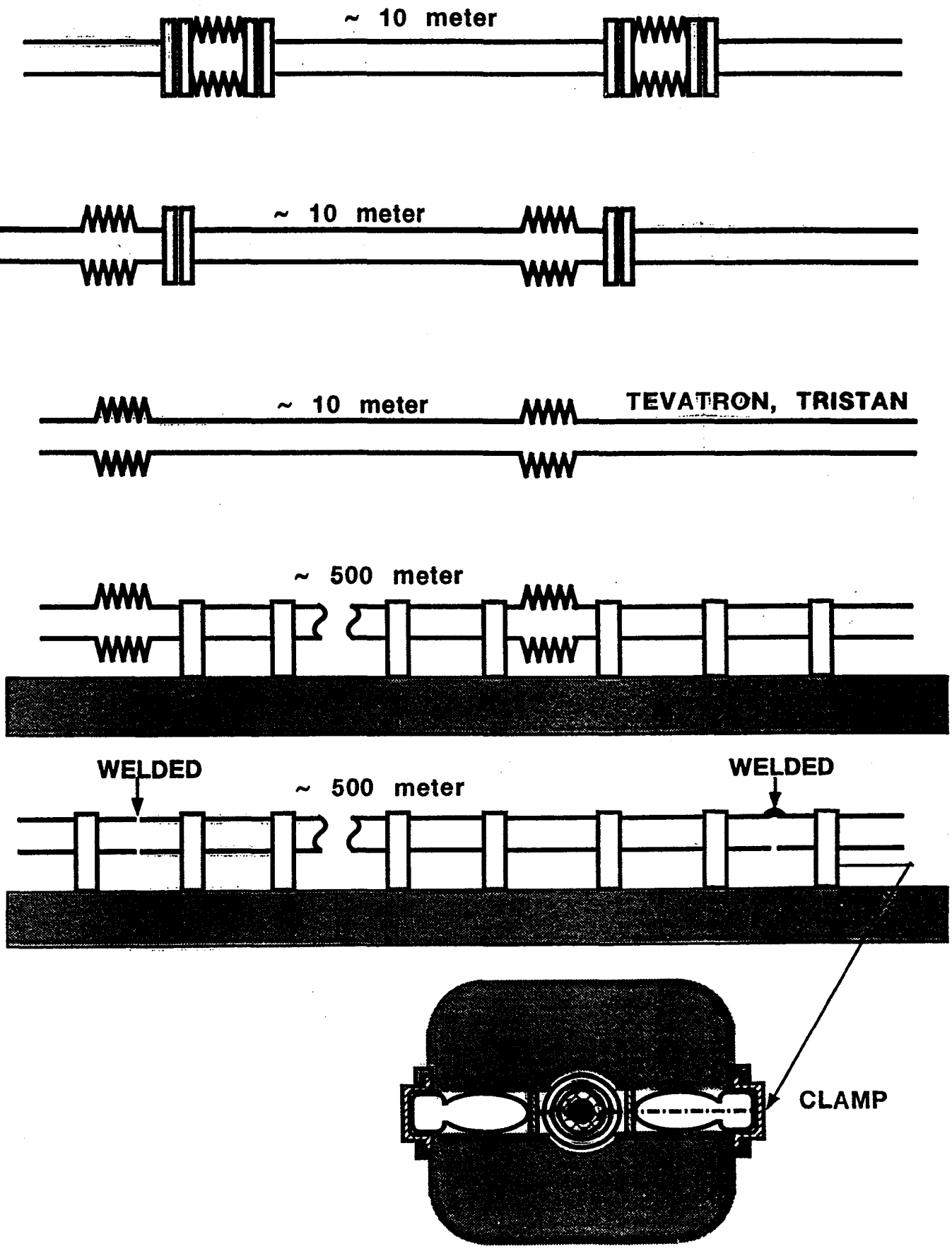
~ 10 meter
~ 10 meter
~ 10 meter
TEVATRON, TRISTAN
~ 500 meter
WELDED
~ 500 meter
WELDED
CLAMP

NO-BELLOW DESIGN

Thermal expansion of the beam pipe of 500 m long is about 0.5 m for temperature rise of 50°C.

Unit tensile stress against extruded aluminum alloy beam pipe supported and fixed in-steel magnet yokes in room temperature is proportional to thermal expansion coefficient, modulus elasticity, and temperature difference.

For example, temperature difference of 50°C, then, **compression inner stress is 7 kg/mm^2.**

The compressed force for 500 m long beam pipe is about 1,300 kg.

A finite element analysis against inner compression stress was made for long beam pipe with **fixing both ends.**

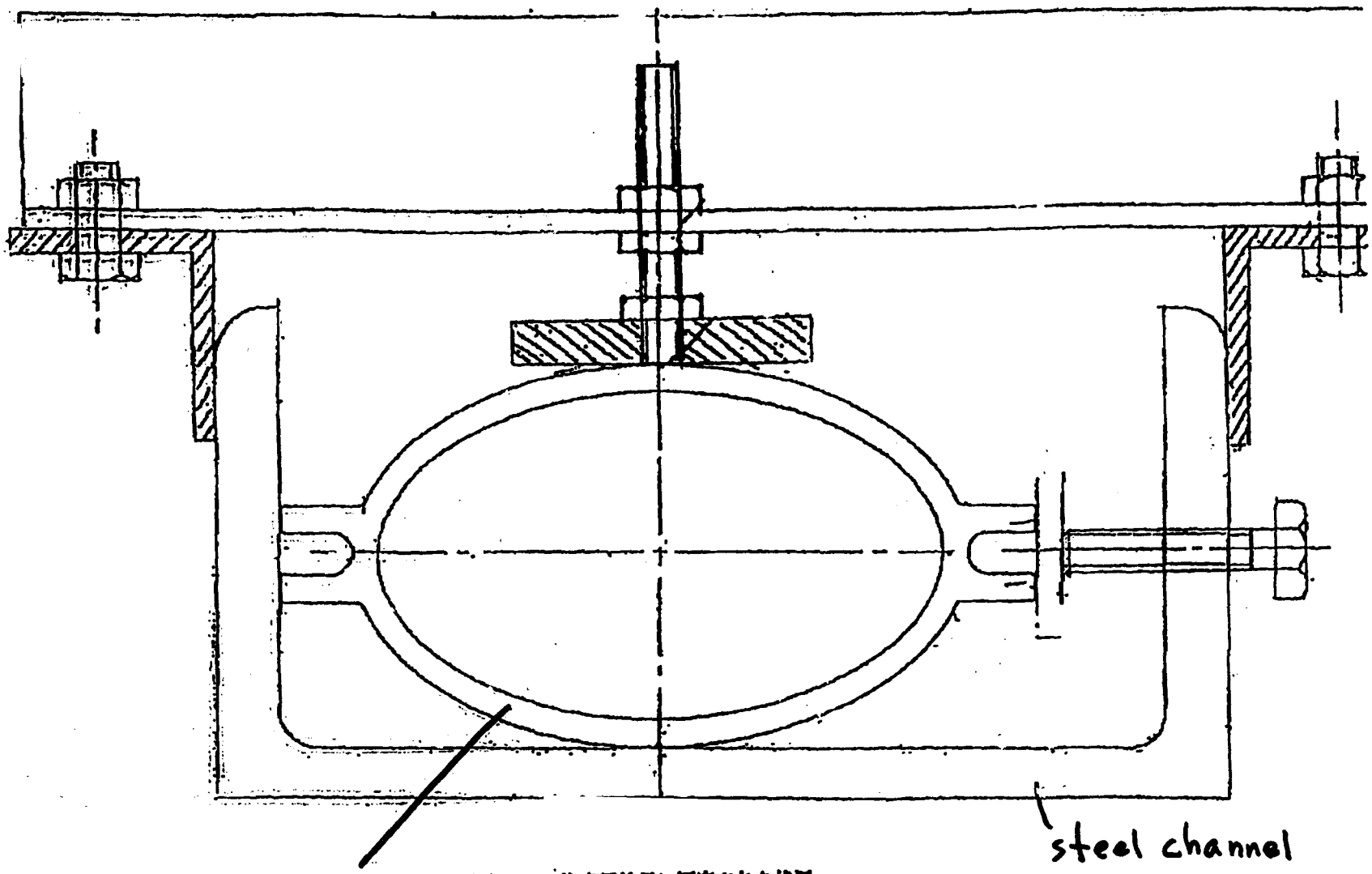

図2-2　真空用治具に固定された状況

Candidate of recycler ring beam pipe, 8.5m long

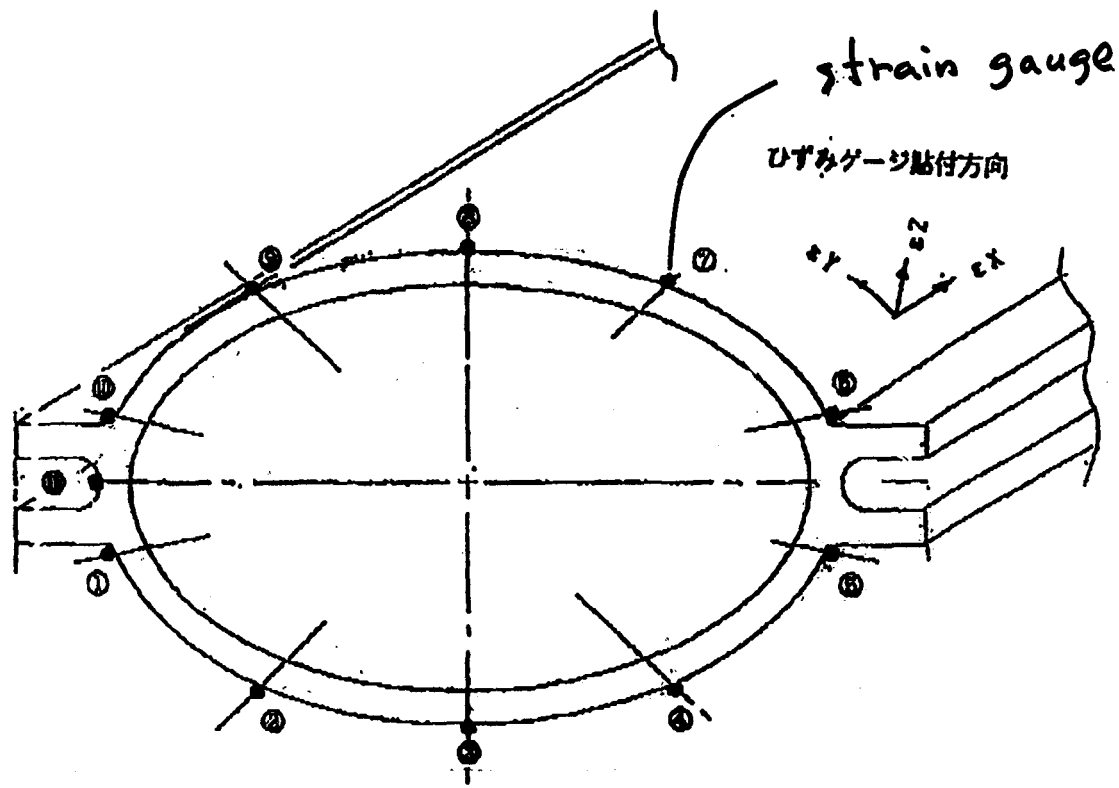
strain gauge
ひずみゲージ貼付方向
εy
εz
εx

stress

表3-3　ケース4（拘束、真空　0.4 Torr）の発生応力

計測位置	50℃				70℃			
	σ_{max} kgf/cm²	σ_{min} kgf/cm²	τ_{max} kgf/cm²	θ (度)	σ_{max} kgf/cm²	σ_{min} kgf/cm²	τ_{max} kgf/cm²	θ (度)
①	381	-175	278	85	423	-397	410	84
②	-81	-396	158	90	-125	-661	268	89
③	-281	-486	102	-81	-431	-784	177	-82
④	-143	-404	130	81	-221	-667	223	82
⑤	185	-112	148	89	393	-254	324	89
⑥	238	-72	155	89	456	-197	331	89
⑦	-65	-271	103	-85	-85	-532	223	-87
⑧	-273	-338	33	-49	-486	-590	86	-76
⑨	-59	-207	74	86	-112	-450	169	-89
⑩	170	-199	184	89	202	-407	304	90

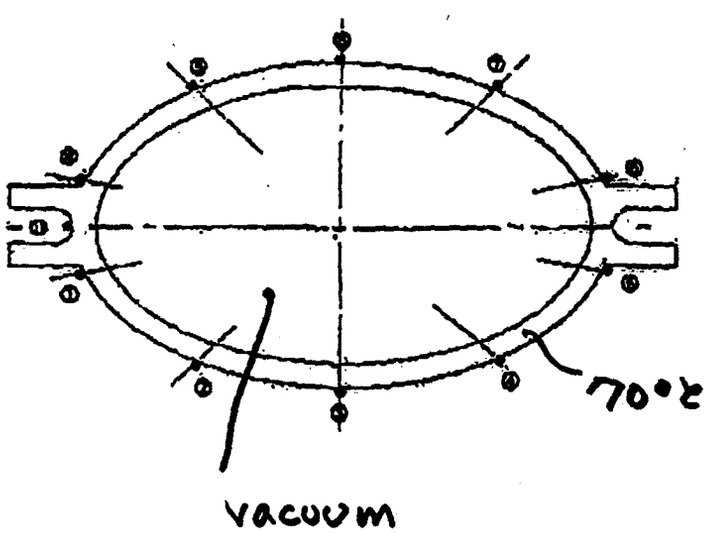

測定位置 8

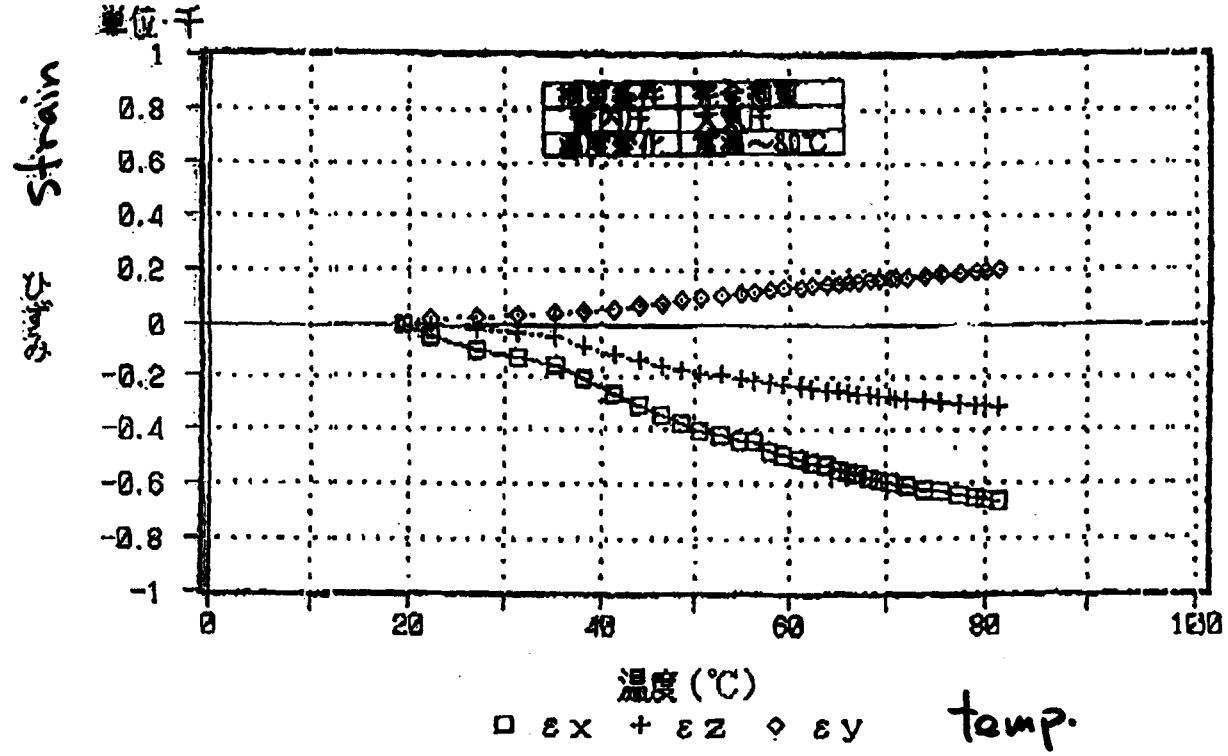
単位:千
1
0.8
0.6
0.4
0.2
0
-0.2
-0.4
-0.6
-0.8
-1
0
20
40
60
80
100
温度(℃)
□ εx + εz ◇ εy
strain
ひずみ
temp.

測定位置　8

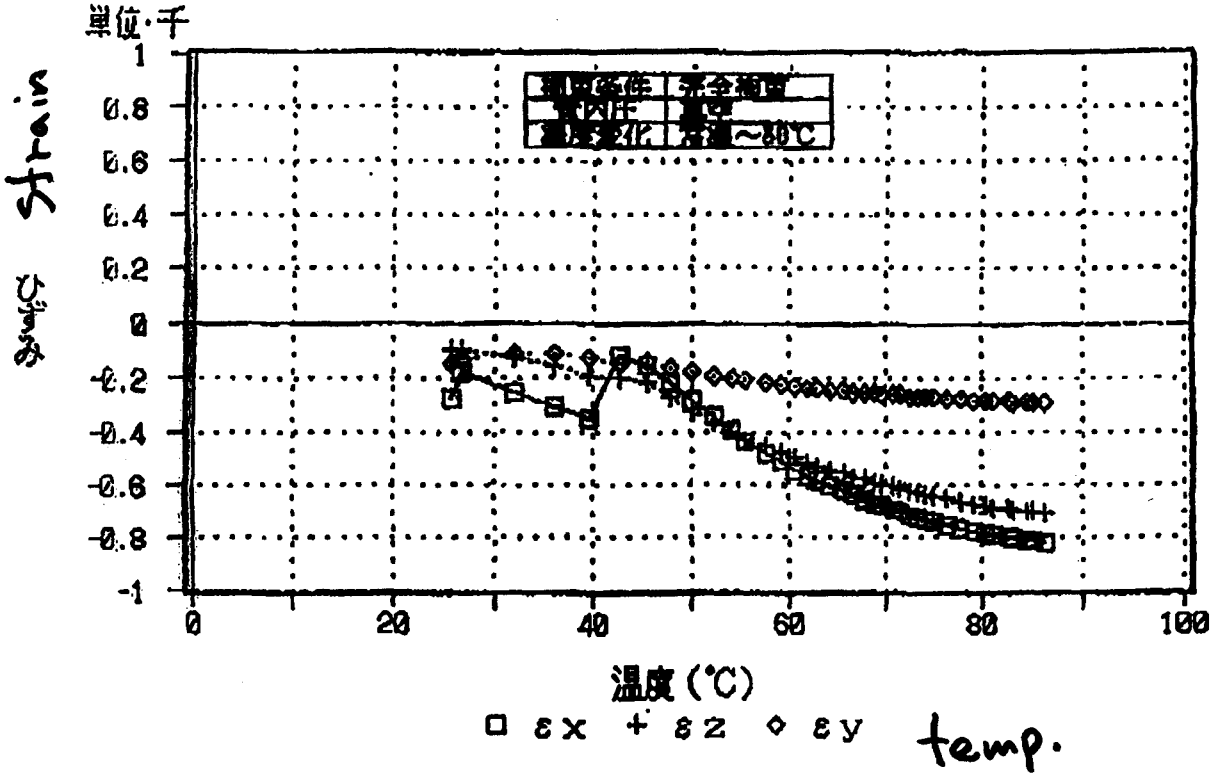
単位:千
1
0.8
0.6
0.4
0.2
0
-0.2
-0.4
-0.6
-0.8
-1
0
20
40
60
80
100
温度(℃)
□ εx + εz ◇ εy
strain
ひずみ
temp.

VACUUM BEAM PIPE

Extruded aluminum alloy beam pipe with elliptical aperture with pumping channel used in beam pipe of 500 m.

The clad structure of **99.99% pure aluminum** on inner surface and **high resistive aluminum alloy 7N01-T5** as the core can be made low resistive wall and low eddy current effect for magnet quench problem.

The thickness of the elliptical pipe is 1.5 mm.

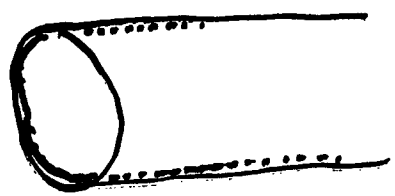

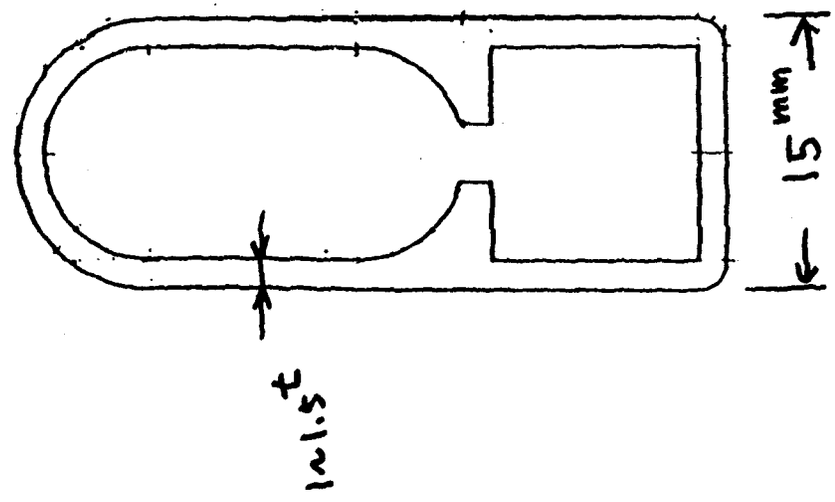

VACUUM BEAM CHAMBER FOR PIPETRON

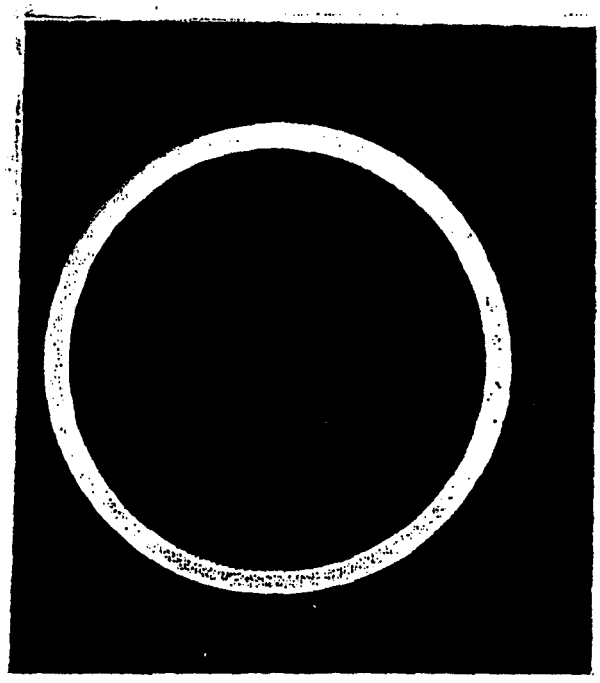

Cross section for Al-clad beam tube

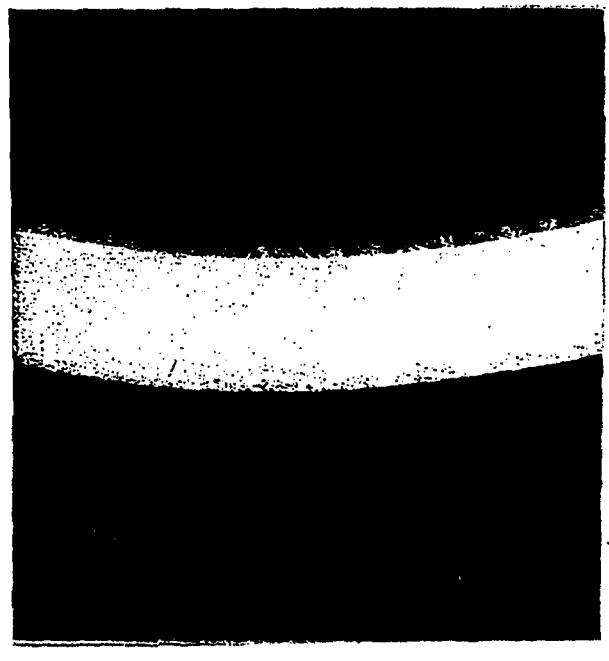

Inside: 99.99% pure aluminum

~100 μm

Outside: 7N01 high strength and high resistivity aluminum alloy

Al-Cu-Mg-Zn

CLEAN EXTRUSION

The EX extrusion process extrude a 500 m long pipe **filled with dry oxygen and nitrogen** to produce a clean native oxide inner surface wall.

After extrusion, the pipe will be coiled in a 4 m in diameter for storage and transport.

Prior to assembly, the coiled pipe will be stretched out to check straightness without deformation of beam pipe using dry oxygen and nitrogen mixture fill.

Degreasing is not necessary.

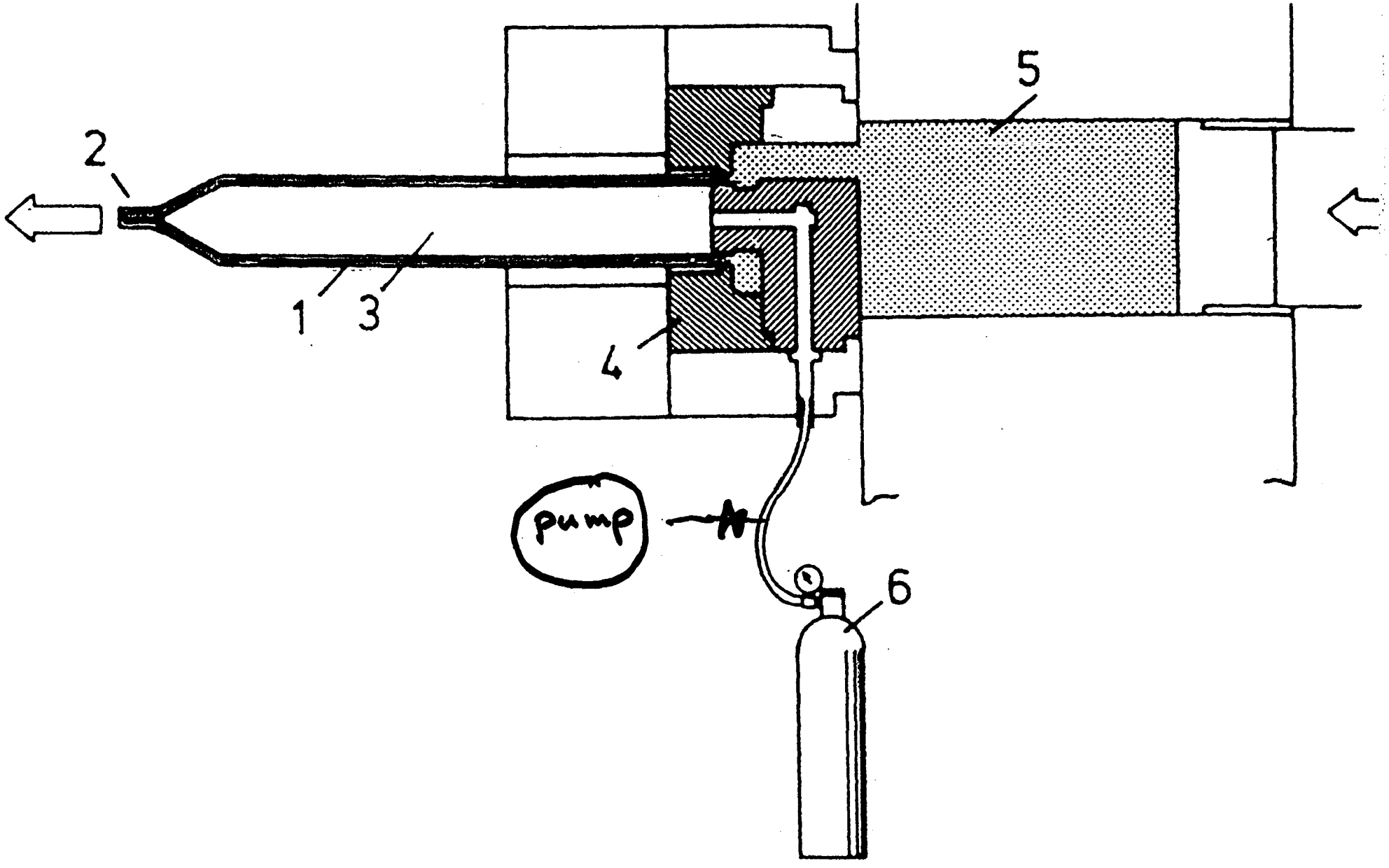

Schematic diagram of the special extrusion process: (1) Al pipe, (2) vacuum tight end, (3) argon and oxygen mixture, (4) port hole die, (5) gas tank.

AUTOMATIC WELDING

Using automatic welding, the beam pipe with elliptical aperture with pumping channel are used in length of 500 m.

Automatic welding equipment for the elliptical pipe was developed with small size, light weight and easy to handle by a remote controlled robot to ensure uniform penetration.

This equipment is designed to move a TIG welding torch along the elliptical cross section of the beam pipe along a guiding orbits.

Guide orbit of the automatic welder can be separated, and can be mounted on fixed beam pipe.

KEY RECOMMENDATIONS

1) Construct: Co-extrusion beam pipe — Low outgassing
Inside: 99.99% high purity Al — Low resistive wall
Outside: 7N01-T5 high strength & high resistive Al — Low eddy current effect during quench magnet

No-melt-down/low residual radioactivity

2) No-flange/No-Bellows: All automatic welding/support & fix to magnets
Extremely low cost/High reliability/small impedance

3) No-high temperature baking: 70C mild warm-up — Chemical process removing water adsorption
No-thermal insulation

ACKNOWLEDGMENTS

E.Malamud
G.W.Foster
P.Limon
S.Holmes
G.Jackson

Alvalab

Comment on Non-Perturbative Solutions in the Standard Model

by
A.Baldin

Laboratory of High Energies
JINR, Dubna

LHC PHYSICS AND DETECTORS

RELATIVISTIC HEAVY ION PHYSICS AT THE LHC

DUBNA
JULY 19-21, 1995

A.M. BALDIN JINR

- REASONS FOR SCIENCE SUPPORT
- BASIC QUESTIONS ABOUT THE NATURE OF THE UNIVERSE AND THE DISCOVERY POTENTIAL OF RELATIVISTIC HEAVY ION PHYSICS
- SYMMETRY AND PREDICTIONS FROM FIRST PRINCIPLES
- MODELS AND NON-PERTURBATIVE METHODS
- THE BARYON AND LEPTON NUMBER VIOLATION IN THE STANDARD MODEL, ROTATION VARIABLES IN NUCLEAR MATTER, PRODUCTION OF ANTIMATTER, ETC.

POINT EXPLOSION

$$\Pi = \left(\frac{Et^2}{\rho}\right) = \frac{3\Gamma}{11 - \frac{2}{3}N_f} = \frac{4\pi}{9} \approx 1.4$$

$\alpha(m_Z) = 0.118$

OBSERVED UNIVERSAL SPIN J AND MASS m RELATIONSHIP FOR A WIDE RANGE OF ASTRONOMICAL OBJECTS

$$\frac{J}{\hbar} = \left(\frac{m}{m_p}\right)^{\alpha}$$

R.M. MURADIAN

THE DISCOVERY OF NEW INVARIANCE PRINCIPLES WAS ALWAYS CONNECTED WITH OBTAINING OF PARTICLES OF EVER LARGER MASSES $\mu, \bar{p}, K, \Lambda$ J/ψ, Υ, τ, W, Z, t.

THE PRINCIPLE OF RELATIVITY (POINCARÉ GROUP) DOES NOT IMPLY RESTRICTIONS ON MAXIMUM VALUE OF THE ELEMENTARY PARTICAL MASS (IN THE LOCAL FIELD THEORY)

$$0 \leq m < \infty$$

NON-PERTURBATIVE SOLUTIONS IN THE STANDARD MODEL

THE MULTIBOSON PHENOMENA IN ELECTROWEAK PHYSICS ARE ASSOCIATED WITH THE VIOLATION OF THE SUM OF THE BARION AND LEPTON NUMBERS $(B+L)$ IN THE STADARD MODEL.

G. 't HOOFT 76

SUCH PROCESSES DETERMINE THE EVOLUTION OF $(B+L)$ IN THE EARLY UNIVERSE

V. A. KUZMIN, V. A. RUBAKOV, a. M. E. SHAPOSHNIKOV 85

AND, IN PRINCIPLE OBSERVABLE IN HIGH ENERGY COLLISIONS.

THE CROSS SECTION OF THIS REACTION SHOULD OBEY THE SCALING BEHAVIOUR:

$$\sigma^{tot}_{a(B+L)} \sim \exp\left[-\frac{4\pi}{\alpha_W}\cdot S\left(\frac{E}{E_0}\right)\right]$$

THE WKB TUNNELING FACTOR $\exp\frac{-2\pi}{\alpha_W} \sim 10^{-80}$

$$E_0 = \sqrt{6}\,\pi\,\frac{m_W}{\alpha_W} \approx 18\,\text{TeV}. \quad S(\epsilon) \cong 1 - \frac{9}{8}\epsilon^{4/3} + \ldots$$

THE SUBJECT RELEVANT TO DIFFERENT FIELDS

COSMOLOGY

EARLY UNIVERSE $t \approx 10^{-5}$ s

$T \approx 200$ MeV

- NUCLEO-SYNTHESIS
- DARK MATTER
- LARGE SCALE STRUCTURE OF UNIVERSE
- THE EVOLUTION OF (B+L) AT HIGH TEMPERATURE IN THE EARLY UNIVERSE

ASTROPHYSICS

- STABILITY OF NEUTRON STARS
- DYNAMICS OF SUPERNOVA EXPLOSIONS
- RELATIVISTIC NUCLEI IN COSMIC RAYS

HIGH ENERGY PHYSICS

- ANTIMATTER PRODUCTION
- SYMMETRY OF SOLUTIONS OF THE STANDARD MODEL
- THE INSTANTON INDUCED HARD PROCESSES IN QCD

NUCLEAR PHYSICS

- TRANSITION REGIME
- ROTATION OF NUCLEAR MATTER
- STRONGLY EXCITED NUCLEAR MATTER

SIGNIFICANT DISCOVERY POTENTIAL FOR SURPRISES

OBSERVABILITY OF MULTIBOSON PRODUCTION IS ONE OF THE MOST INTRIGUING PREDICTIONS FOR FUTURE LHC EXPERIMENTAL PROGRAM.

BUT ALL THESE PREDICTIONS ARE OBTAINED IN SIMPLIFIED MODELS.

THE ROLE OF THE NON-PERTURBATIVE SOLUTIONS IN THE DESCRIPTION OF THE HIGH-ENERGY PHYSICS PROCESSES ARE YET TO BE UNDERSTOOD.

THE SAME MECHANISM IS RESPONSIBE FOR BOTH THE VIOLATION OF (B+L) NUMBER CONSERVATION IN ELECTROWEAK INTERACTIONS AND ANOMALOUS SPIN EFFECTS IN QCD.

THE NON-PERTURBATIVE GLUON FIELD (INSTANTONS) AS A MODEL OF QCD VACUUM.

EXPERIMENTAL CONFIRMATION OF THE PREDICTIONS FOLLOWING FROM THE INSTANTON MECHANISM OF ANOMALOUS SPIN AND FLAVOR EFFECTS

A.E. DOROKHOV AND N.I. KOCHELEV

$$\Delta\sigma^{NN} = \sigma^{NN}_{tot}\left(\rightleftarrows\right) - \sigma^{NN}_{tot}\left(\rightrightarrows\right)$$

SYMPOSIUM „DUBNA DEUTERON 95"

CONCLUSIONS

RESEARCH PROGRAMS ON RELATIVISTIC HEAVY ION PHYSICS PRESENTED AT MANY CONFERENCES AND IN LITERATURE SHOW A SIGNIFICANT DISCOVERY POTENTIAL OF THIS FIELD.

- THE LAWS GOVERNING STRONGLY EXCITED NUCLEAR MATTER AND THE PRODUCTION OF ANTIMATTER ARE PREDICTED AND STUDIED.

- SYMMETRY PRINCIPLES POSSESSING LARGE DEDUCTIVE POSSIBILITIES FOR VARIOUS BRANCHES OF FUNDAMENTAL SCIENCE, ESPESIALLY FOR PARTICLE ASTROPHYSICS AND COSMOLOGY, ARE VERIFIED.

- EXPERIMENTAL DATA THAT COULD BE EXPRESSED IN THE FORM OF RELATIONS BETWEEN INVARIANT QUANTITIES ARE NEEDED.

THE STANDARD MODEL AND THE SYMMETRY OF SOLUTIONS

• INVARIANT CHARGES IN THE RENORMALIZATION GROUP:

$$\bar{\alpha}(x,\alpha) = \bar{\alpha}(x/t, \bar{\alpha}(t,\alpha))$$

„RUNNING COUPLING", ASYMPTOTIC FREEDOM

INITIAL STATE: QUARK-ANTIQUARK

THE TEST OF THE GLUON SELF-COUPLING WAS PERFORMED WITH FOUR-JET EVENTS.

$e^+e^- \longrightarrow 4$ JETS

DELPHI (1993)

A SEPARATE STUDY OF QUARK AND GLUON HADRONIZATIONS, MEASUREMENT OF THE CASIMIR FACTORS

OBSERVABILITY OF COLOR CHARGES

$$\frac{Q_g^c}{Q_q^c} = 3/8$$

• MULTIPLE PARTICLE PROCESSES IN THE FOUR-VELOCITY SPACE ARE DESCRIBED BY UNIVERSAL LAWS WITH A FEW RELATIVISTIC INVARIANT PARAMETERS (CLUSTERS, LOCAL PROPERTIES OF MULTI-PARTICLE STATES).

EXPERIMENTS AT LHC ARE EXPECTED TO MAKE IT POSSIBLE TO INVESTIGATE FAR DISTANT <u>ASYMPTOTICS</u> OF THESE PARAMETES AND DISCOVER DEVIATIONS FROM THE REGULARITIES WHICH ARE DUE TO LARGE MASSES, MULTIBARION PHENOMENA AND OTHER SURPRISES.

• THE STUDY OF THE ROTATIONAL PROPERTIES OF HADRONIC MATTER (SPIN PHYSICS) IS VERY PROMISSING IN FUTURE IN INTERPRETING THE LAWS OF NON-PERTURBATIVE PHENOMENA.

ACCELERATOR PHYSICS IN A LARGE SUPERFERRIC COLLIDER

NEW LOW-COST APPROACHES TO HIGH ENERGY HADRON COLLIDERS AT FERMILAB MINI-SYMPOSIUM

APS ANNUAL MEETING
INDIANAPOLIS, INDIANA
MAY 3, 1996

G. JACKSON

SUMMARY OF "REAL" ISSUES

- POWER SUPPLY RIPPLE
- RESISTIVE WALL INSTABILITY
- EMITTANCE GROWTH AND ITS SUPPRESSION
- COLLIMATION
- ABORT DUMP STRATEGIES
- INSTRUMENTATION

ACCELERATOR CIRCUMFERENCE ISSUES

LET US SCALE THE RADIUS OF A 30 TeV × 30 TeV HADRON COLLIDER FROM THE TEVATRON. IMPLICIT IN THIS APPROACH IS THAT THE BIG COLLIDER WILL HAVE THE SAME PACKING FRACTION (TOTAL LENGTH OF ALL DIPOLES DIVIDED BY THE MACHINE CIRCUMFERENCE) AS AN EXISTING HADRON STORAGE RING.

TEVATRON: 1 TeV 4.4 TESLA = 1 km

NLHC: 30 TeV 1.8 TESLA = 74 km

LET US ASSUME THAT THERE IS A TOTAL OF 16 km OF STRAIGHT SECTION FOR RF, DETECTOR(S), INJECTION AND EXTRACTION, ETC.... THEN THE TOTAL CIRCUMFERENCE IS

$$C_{NLHC} = 480 \text{ km}$$

THE TIME IT TAKES A PARTICLE TO EXECUTE ONE TURN AROUND THIS MACHINE IS

$$T_{NHLC} = 1.6 \text{ ms}$$

WHICH CORRESPONDS TO A REVOLUTION FREQUENCY OF

$$f_{rev} = 625 \text{ Hz}$$

IN THE TEVATRON A PERSISTENT PROBLEM IS ORBIT, ENERGY, AND TUNE MODULATIONS AT HARMONICS OF THE LOCAL LINE FREQUENCY 60 Hz. IN FACT, HARMONICS ALL THE WAY UP TO 21 MHz WERE SEEN TO HAVE A SIGNIFICANT DISRUPTIVE EFFECT. THE ABOVE REVOLUTION FREQUENCY IS AT 60Hz HARMONIC NUMBER

$$N_{NLHC} = \frac{625}{60} = 10.4167$$

THIS IS A VERY BAD SITUATION, SINCE THE DENSITY OF 60 Hz LINES IN THE TUNE PLANE BECOMES INFINITE WHEN N IS NOT AN INTEGER OR RATIONAL FRACTION. THE OPTIMUM SITUATION IS WHEN N IS AN INTEGER.

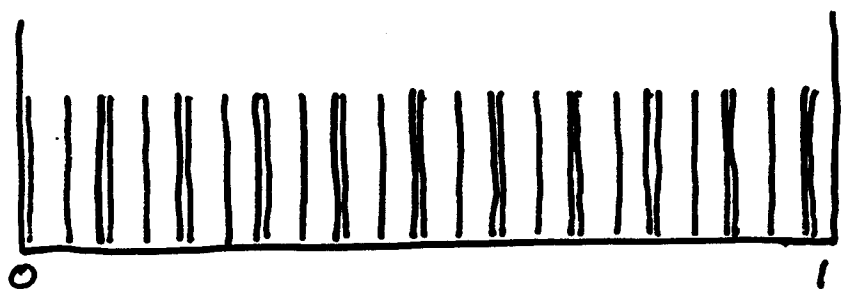

0 - 625
625 - 1250
1250 - 1875

BECAUSE OF LATTICE IMPERFECTIONS WE MUST AVOID RESONANCE UP TO 10TH ORDER. THEREFORE, LET $N_{NLHC} = 10$. THEN

$$N_{NLHC} = 10$$
$$F_{NLHC} = 600 \text{ Hz}$$
$$T_{NLHC} = 1.667 \text{ msec}$$
$$C_{NLHC} = 500 \text{ km}$$

RESISTIVE WALL INSTABILITY

YOU HAVE BEEN TOLD THAT THE GROWTH RATE FOR THE TRANSVERSE RESISTIVE WALL INSTABILITY IS $\propto 1$ TURN. THERE ARE 4 BASIC METHODS FOR LIVING WITH THIS REALITY

① MAKE THE VACUUM CHAMBER BIGGER ⊗ HIGHER DIPOLE CURRENT

② USE HIGHER CONDUCTIVITY VACUUM CHAMBER ⊗ COST & LACK OF BIG IMPROVEMENTS

③ LOCAL FEEDBACK – QUADRATURE DAMPERS

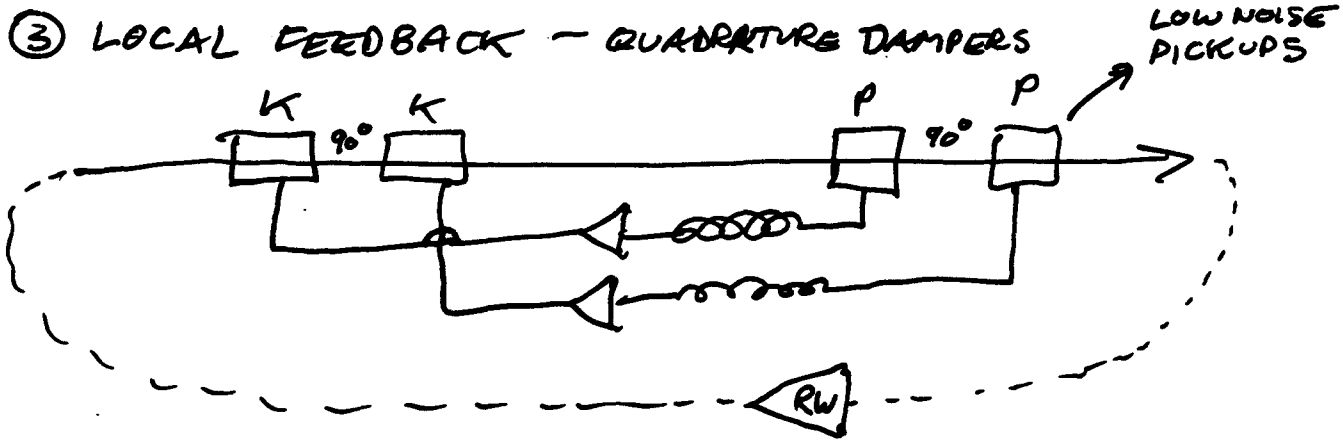

④ DISTRIBUTED COUPLED BUNCH FEEDBACK

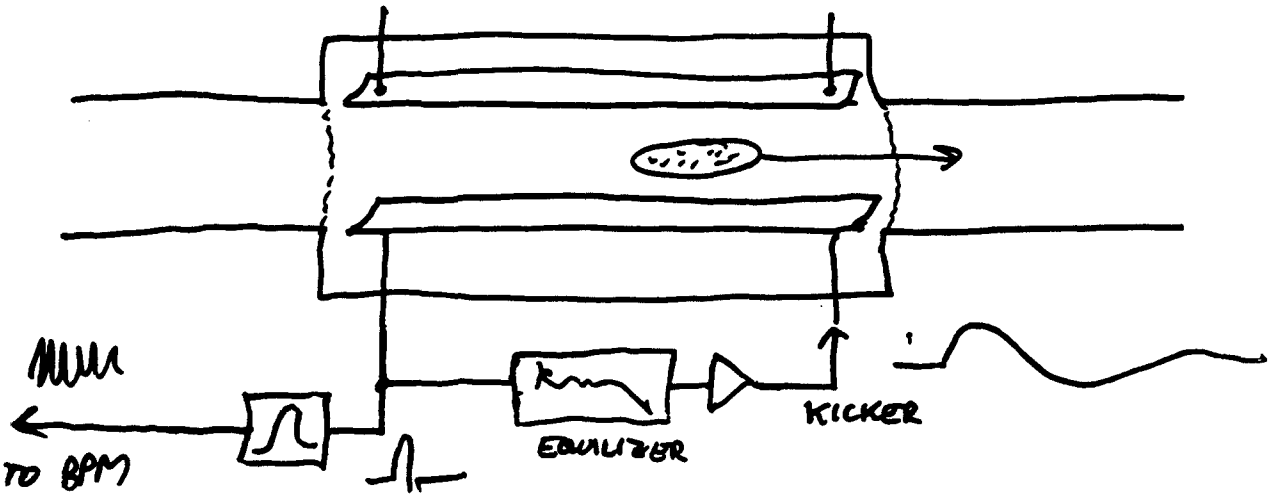

EMITTANCE GROWTH AND ITS SUPPRESSION

THE EXPERIENCES WITH EXTERNALLY DRIVEN EMITTANCE GROWTH ~~[illegible]~~ IN THE TEVATRON COLLIDER IS NOT ENCOURAGING WHEN TALKING ABOUT ACCELERATORS ~60x BIGGER. THE PROBLEM IS THE SHAPE OF THE NOISE SPECTRUM IN THE WORLD.

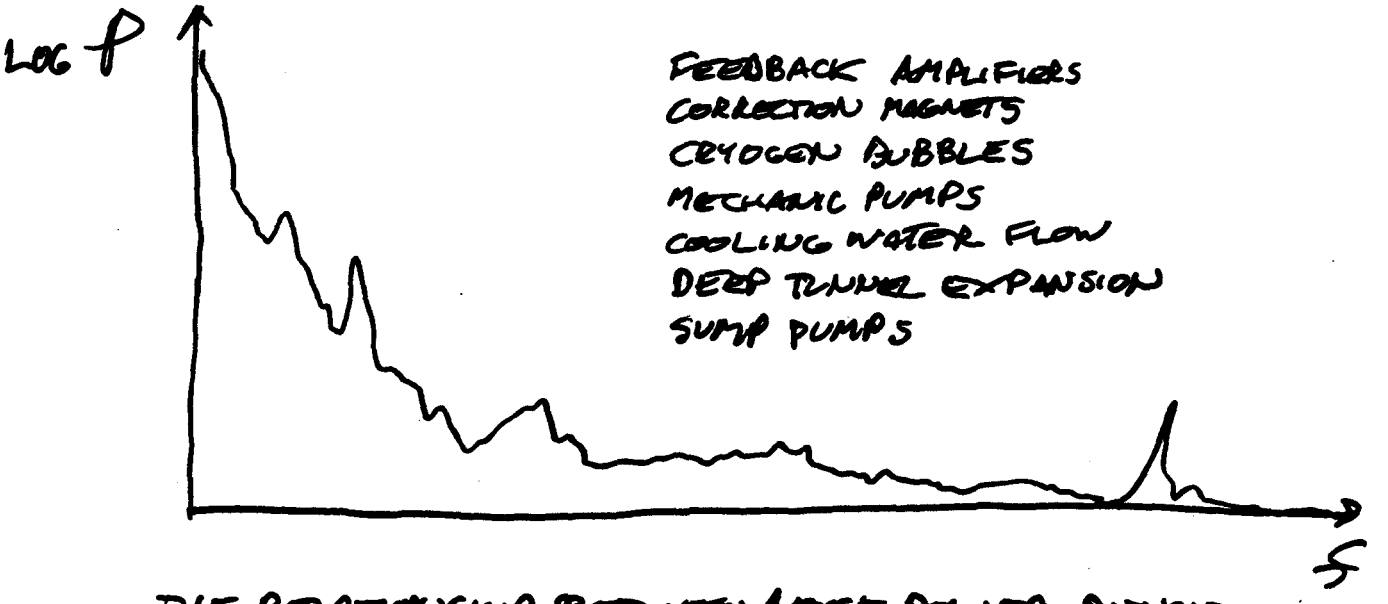

THE RELATIONSHIP BETWEEN NOISE POWER DENSITY AT THE BETATRON AND SYNCHROTRON FREQUENCY AND EMITTANCE GROWTH RATE IS

$$\frac{d\varepsilon_n}{dt} = \frac{1}{2}\beta f_0 \, \Theta^2_{RMS}$$

NOISE POWER

THE LOWEST BETATRON FREQUENCY IS APPROXIMATELY $0.4 \times E_{MLHC}$ FOR A STANDARD OPERATING POINT. IN THE TEVATRON THIS FREQUENCY ~~[illegible]~~ IS ~20 kHz, IN THE NLHC IT IS MUCH LOWER, NEAR 240 Hz!! THE SYNCHROTRON FREQUENCY IS AROUND ~1 Hz !!!

- AS PART OF A STUDY OF THE SSC, THE TEVATRON COLLIDER TUNE WAS REDUCED FROM 0.4 TOWARD 0.09.

- THE TRANSVERSE EMITTANCE GROWTH INCREASED FROM ~ 0.5 π mm-mr/HR TO > 25 π mm-mr/HR WHEN THE TUNE WAS LOWERED TO ~ 0.12. THE BEAM WAS GROWING SO FAST THE MEASUREMENT OF EMITTANCE BECAME DIFFICULT.

TUNE	BETATRON FREQ (Hz)	$\frac{d\varepsilon_n}{dt}$ (π mm-mr/HR)
0.42	19100	0.5
0.12	5720	25
0.09	4290	>> 25

- THERE ARE TWO OPTIONS FOR PASSIVE SUPPRESSION OF THIS EMITTANCE GROWTH RATE:
  1) MECHANICAL MOUNTS SPECIALLY DESIGNED TO ISOLATE THE MAGNETS FROM SOURCES OF RAPID MOTION
  2) CRYOGEN/ELECTRICAL SYSTEM DESIGN ELIMINATING ALL SOURCES OF NOISE.

- IT IS POSSIBLE TO BUILD A FEEDBACK SYSTEM CAPABLE OF SUPPRESSING THIS EMITTANCE GROWTH. THE NECESSARY INGREDIENTS ARE:
  1) LOW NOISE PICKUPS & PRE-AMPLIFIERS
  2) DAMPING TIMES SHORT COMPARED TO THE NONLINEARITY INDUCED DECOHERENCE TIMES.

Outline of Topics to Work on at Snowmass

by
Ernest Malamud

Fermilab

Snowmass "pipetron" study
-- a partial list --

- HIGH ENERGY PHYSICS
- Detector Parameters
- ACCELERATOR PHYSICS
  - parameters
  - beam transfers and injection scenarios
  - instabilities and feedback systems
- PROJECT DETAILS
  - magnets
    - main magnets
    - correctors
    - alignment and support
    - high Tc and APC materials
  - cryogenics
    - He, H2, N2 system parameters
    - spider design and heat leak
  - quench protection and magnet power supply
    - quench propagation velocity
    - power supply and dump design
  - vacuum
  - tunneling
    - tunnel cost optimization: muck removal, cutter changing, liners
    - guidance
    - power distribution system
  - installation and repair
    - magnet installation
    - remote vacuum welder, superconductor splicer
    - reliability analysis
    - scenarios for recovery from failure
  - radiation and environment
    - particle fluxes around the ring
    - particle fluxes in the on-site hall; detector backgrounds
    - ground water activation
    - interaction of the beam with components, including one pulse accidents
    - beam loss handling
  - instrumentation, monitoring, controls
    - system design
    - radiation resistance of fiber optics
- COMPARISON WITH HIGH FIELD APPROACH
- GAINING PUBLIC SUPPORT