ON NEUTRON-ANTINEUTRON OSCILLATIONS

C. Y. Chang and R. N. Mohapatra
University of Maryland
College Park, Maryland 20742

The recent discovery of the intermediate vector bosons, $W^{\pm}$ and Z° at CERN has confirmed the standard model of Glashow, Weinberg, and Salam, which is based on the gauge group $SU(3)_C \otimes SU(2)_L \otimes U(1)_{EM}$.[1,2] Although very successful, this model leaves many questions unanswered. Why does nature require these three interactions with such different strengths? Why is nature left-handed, etc.? Recent theoretical works indicate that new, yet undiscovered physics at the intermediate mass scale of a few TeV to several hundreds of TeV, may provide the answers to some of these questions. Such a belief has prompted the high energy physics community to look hard at the experimental feasibility of exploring the new physics in this mass region. An outstanding example of its kind is the study and design of the super-super-conducting-collider (SSC) and its associated detectors in the United States of America.[3,4]

In this paper, we would like to point out that a search for neutron-antineutron oscillations in free space would be a good complementary experiment to those addressed at SSC, which may provide crucial information leading to the understanding of physics in this new mass region. We shall first present our theoretical arguments than followed by a conceptual design of the experiment.

What kind of new physics will be probed by the search for neutron-anti-neutron oscillation? To answer this question, we start by noting that there is a variety of theoretical reasons to suggest that, the weak local hypercharge symmetry $U(1)_Y$ of the standard model is not fundamental but rather to be part of a bigger symmetry which contains $U(1)_{I_{3R}} \otimes U(1)_{B-L}$, where I_{3R} is the 3rd component of the right-handed weak isospin and B-L is the difference between the baryon and lepton numbers. Intuitively, the above assertions can be reached due to the following reasons:

(i) The only non-gauged, anomaly free symmetry of the standard model is the B-L symmetry; it is, therefore, tempting to suggest that $U(1)_{B-L}$ to be a local symmetry of electro-weak physics beyond the standard model.

(ii) Theories that restore parity[5] to the status of an exact short distance symmetry imply that the next level of local electro-weak symmetry is actually $SU(2)_L \otimes SU(2)_R \otimes U(1)_{B-L}$.

(iii) Many recent developments in theoretical physics such as composite models[6] and superstrings actually imply[7] the existence of the left-right symmetric gauge group somewhere between the Planck scale and the electro weak scale.

An important consequence of the left-right symmetry group is the new electric charge formula[8]

$$Q = I_{3L} + I_{3R} + \frac{B-L}{2} \tag{1}$$

Since $\Delta Q = 0$ and $\Delta I_{3L} = 0$ should be held above the mass scale of the W-boson, Eqn. (1) indicates that, $\Delta(B-L) = 2\,\Delta I_{3R}$. For purely hadronic processes, the violation of parity, therefore, implies the violation of baryon number accoridng to $\Delta B = 2\,\Delta I_{3R}$. The possible non-zero values of ΔI_{3R} are 1/2, 1, ... which lead to the violation of baryon number, in particular n-$\bar{n}$ oscillation. We summarize below, two detailed theoretical schemes where $\Delta B = 2$ phenomena arise:

(a) The simplest left-right symmetric gauge model which also unifies quarks and leptons is $SU(2)_L \otimes SU(2)_R \otimes SU(4)_C$, where $SU(4)_C \supset SU(3)_C \otimes U(1)_{B-L}$. In this model, n-$\bar{n}$ oscillation arises via the graph, as shown in Fig. 1,

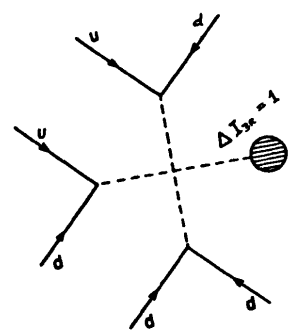

Figure 1. The tree graph that induces the six fermion $\Delta B = 2$ vertex that leads to $n - \bar{n}$ oscillation.

where dotted lines represent Higgs bosons with diquark quantum number and the shaded blob represents the spontaneous breaking of B-L by two units.[9] Thus the strength of the $\Delta B = 2$ transition can be estimated in terms of the following effective coupling constant:

$$G_{\Delta B=2} = \frac{\lambda \cdot h^3 M_{B-L}}{M_C^6} \tag{2}$$

where M_C represents the strength of $SU(4)_C$ breaking and M_{B-L} is the scale of B-L symmetry breaking. Recent versions of SO(10) in grand unified theories predict that $M_C \simeq M_{B-L} \simeq 100$ TeV, for $\lambda \simeq h \simeq 10^{-1}$, it leads to $G_{\Delta B=2} \simeq 10^{-29}$ GeV^{-5}. Phenomenologically, analogous to the well known K°- $\bar{K}^{\circ}$ oscillation, n-$\bar{n}$ transitons is characterized by an oscillation time: $\tau_{n\bar{n}}$, with

$$\tau_{n\bar{n}}^{-1} = \langle \bar{n} | H | n \rangle = G_{\Delta B=2} |\psi(0)|^2 \tag{3}$$

where $\psi(0)$ is the nucleon wave function at the origin, and $|\psi(0)|^2$ is estimated to be of the order of 10^{-4}, hence $\tau_{n-\bar{n}} \simeq 10^8$ sec. Note that in this partial unification model, proton is stable.

(b) The second class of models are the superstring inspired E_6- grand unified theories coupled to N = 1 supergravity. In these classes of theories, the presence of an $SU(2)_L$ singlet quark g combined with the breaking (B-L) - by a Higgs boson which has quantum numbers of the right-handed neutrino (i.e., $|B-L| = 1$) leads to an observable[10] $\Delta B = 2$ transition amplitude via a diagram as shown in Figure 2. The estimate for $G_{\Delta B=2}$ in this case is:

$$G_{\Delta B=2} = (\lambda,\lambda)^2 \left(\frac{\langle H_{\nu_R}\rangle}{m_g}\right)^2 \frac{4\pi\alpha_s}{m_g M^4_{squark}} \qquad (4)$$

A very plausible scenerio for symmetry breaking is that $\langle H_{\nu_R}\rangle = m_g$, in which case, using $M_{squark} \simeq 10$ TeV, $M_G \simeq 10$-100 GeV and $\lambda \simeq 10^{-2.5}$, we find $G_{\Delta B=2} \simeq 10^{-30} - 10^{-31}$ $(GeV)^{-5}$. These correspond to $\tau_{N-\bar{N}} \simeq 10^7$-$10^8$ sec. Again, this is in the accessible range of the proposed experiment.

Experimentally, because of the existence of the transition amplitude $\langle\bar{n}|H|n\rangle = \varepsilon$, an initially pure neutron state (B=+1) will develope an antineutron component (B=-1) at a later time, t, with the probability $P(\bar{n},t)$:

$$P(\bar{n},t) = \frac{\varepsilon^2}{\varepsilon^2+\delta^2} \times \sin^2 (\sqrt{\varepsilon^2+\delta^2}\, t) \qquad (5)$$

where $\delta = \frac{1}{2}\Delta E$, and ΔE is the energy difference between the n-$\bar{n}$ states due to external field perturbations. For instance, in the influence of the earth's magnetic field, $\delta = \mu B_{earth} = 2.85 \times 10^{-12}$ eV for $B_{earth} = 0.5$ gauss. Inside a solid, δ would be 6×10^{-6} ev. On the other hand ε is of the order of 10^{-22} eV which is $\ll\delta$, hence we can write:

$$P(\bar{n},t) = \frac{\varepsilon^2}{\delta^2} \sin^2 \delta t \qquad (6)$$

In practice, since t is $\gtrsim 0.1$ second, it is reasonable to assume that $\sin^2\delta t = (\delta t)^2$ for $B \lesssim 10^{-4}$ gauss, so that

$$P(\bar{n},t) = (\varepsilon t)^2 = (t/\tau_{n\bar{n}})^2$$

Thus, the experimental figure of merit to be used for guiding the design of an experiment is

$$N\, P(\bar{n},t) = Nt^1 / \tau^2_{n\bar{n}} \qquad (7)$$

where N is the number of free neutrons delivered to the target and t is the time of flight for the neutrons in the field free space. Hence, it is clear, a good n-$\bar{n}$ experiment should have

i) A cold neutron source with high flux. For instance, a 50 MW reactor with D_2O ice modulator and a beryllium relfector would be ideal.

ii) A magnetically shielded vacuum neutron beam line running in east-west direction, and with a residual field B of no more than 10^{-4} gauss.

iii) A detector which can offer good tracking and showering measurements for both electrons, gammas and pions.

iv) An environment well protected from the reactor and the cosmic ray backgrounds.

v) Finally, the figure of merit Nt^2 must be of the order of 10^9 to 10^{10}.

Keeping all these considerations in mind, we suggest two types of experimental setups:

I). A liquid argon "Time Projection Chamber" (LATPC) located inside a cosmic ray muon vetoing system next to the core of a high flux cold neutron source, the reactor.

Figure 3 shows a conceptual design of such a system. Cold neutrons, originating in the core of a reactor can be delivered to the target region via a well designed beam guide (not shown). The beam guide is usually a slightly curved vacuum pipe shielded from the earth's magnetic field by three layers of mu-metal tubes with small air gaps between them. The target is a thin carbon foil, which is 30 cm in radius, and no more than 100 μm in thickness. Therefore, it is transparent to thermal neutrons and gamma rays. However, because the cross section for the neutron-antineutron annihilation at rest is so huge, almost every antineutron present in the neutron beam will stop inside the target foil. From the study of antiproton-proton interactions at rest, we anticipate that four to five pions, on the average, will be produced in the final states. The pions are isotropic, and having a total energy of 1.8 GeV and a common vertex located in the thin target. Outside the target, we have a layer of 2 radiation lengths of equivalent materials, called the gamma converter. We use the gamma converter to reflect the cold neutrons, convert the high energy gamma rays, and absorb the thermal radiation from the nuclear reactor. The detector is located behind the gamma converter. It is either a cylindrical drift chamber or a "Time Projection Chamber" filled with liquid argon (LATPC). In the case of a LATPC, the impurity content of the liquid argon must be kept below 10^{-9}. Otherwise, the drifting electrons will be lost before they reach the readout planes. As shown in Figure 4 the liquid argon provides at least four radiation lengths, at 90°, of converting material for the gamma rays in all directions (except in the beam direction). Hence the acceptance of the apparatus is very high. Outside the LATPC, we have 45 cm of iron for cosmic muon identification with a layer of scintillators at mid-radius for measuring the time of flight (TOF) of the cosmic ray muons. In order to pick up any showers leaking out the LATPC we may install a few layers of plastic streamer tube chambers at the inner part of the iron plates. Figures 4 and 5 show a few examples of Monte Carlo simulated events.

II). A dedicated cold neutron source inside an underground proton decay or monopole search detectors.

Since underground detectors used for proton decay and monopole searches are usually carefully built to achieve an extremely low background condition, they are ideal for the detection of neutron-antineutron oscillations. Thus what one needs in addition would be a good cold neutron source and its beam guide line.

Footnotes and References

1. S. Glashow, Nucl. Phys. 22, 529 (1961); S. Weinberg, Phys. Rev. Lett. 19, 1264 (1967); A. Salam, In Elementary Particle Theory, Edited by N. Svartholm (Almquist & Wiksell, Stockholm (1968).

2. G. Arnison, et al., Phys. Lett. 122B, 103 (1983)
M. Banner, et al., Phys. Lett. 122B, 476 (1983);
G. Arnison, et al., Phys. Lett. 126B, 398 (1983)
P. Bagnaia, et al., Phys. Lett. 129B, 150 (1983)

3. See for example, "Supercollider Physics", E. Eichten, I. Hinchliffe, K. Lane and C. Quigg, Rev. Mod. Phys. 56, 579 (1984).

4. Proceedings of the 1984 Summer Study on the Design and Utilization of the Superconducting Super Collider, Snowmass, Colorado, 1984.

5. J. C. Pati and A. Salam, Phys. Rev. D10, 275 (1974)
R. N. Mohapatra and J. C. Pati, Phys. Rev. D11, 566, 2558 (1975);
G. Senjanovic and R. N. Mohapatra, Phys. Rev. D12, 1502 (1975).

6. H. Harari and N. Seiberg, Phys. Lett. 98B, 269 (1981).

7. E. Witten, Nuc. Phys. B268, 79 (1986).

8. R. N. Mohapatra and R. E. Marshak, Phys. Lett. 91B, 222 (1980).

9. R. N. Mohapatra and R. E. Marshak, Phys. Rev. Lett. 44, 1316 (1980).

10. R. N. Mohapatra and J. W. F. Valle, Phys. Rev. D34, 1642 (1986).

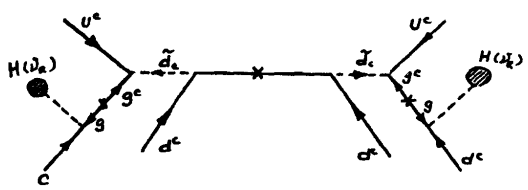

Figure 2. Graph responsible for $n\bar{n}$ oscillation in superstring theory.

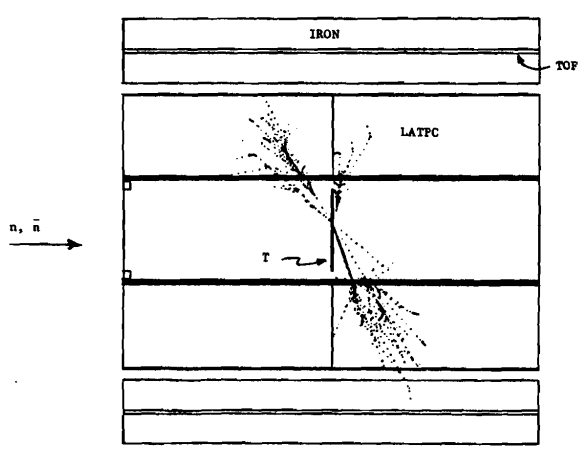

Figure 4. Top view of a typical $\bar{n}$-n annihilation event.

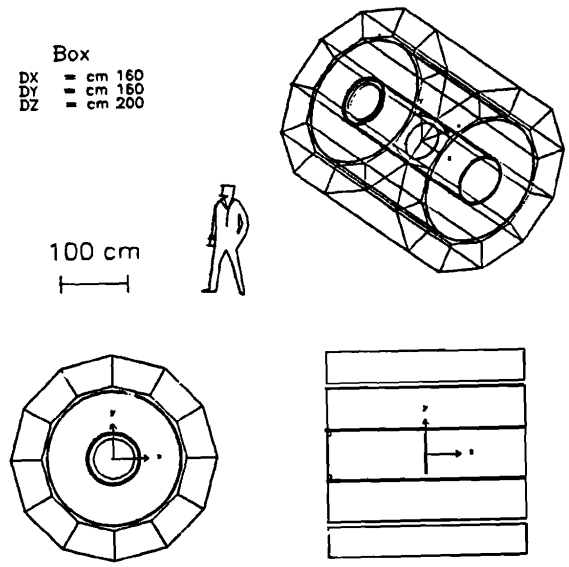

Figure 3. Conceptual design of an n-$\bar{n}$ detector.

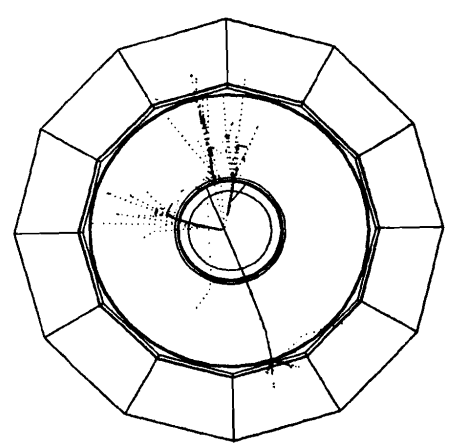

Figure 5. Front view of another example of $\bar{n}n$ annihilation in the thin target.