MAGNETIC MONOPOLES AT THE PARKER LIMIT: NEW PROSPECTS FOR LARGE-SCALE DETECTORS

B. Cabrera[1], M.L. Cherry[2], D.E. Groom[3], J. Musser[4]

1 Dept. of Physics, Stanford Univ., Stanford, CA 94305
2 Dept. of Physics, Univ. of Pennsylvania, Philadelphia, PA 19104
3 SSC Central Design Group, Lawrence Berkeley Lab., Berkeley, CA 94720
4 Dept. of Physics, Univ. of Michigan, Ann Arbor, MI 48109

Introduction

Just four years ago, anyone with a few counters could (and did) modify the electronics and join the search for magnetic monopoles. We were assured by our theorist friends that these massive slowly-moving objects had to be there. Nature failed to oblige, and as a result, the ongoing search now belongs to a few hardy professionals who are willing to "tough it out" for a decade or so, building and operating very large and sophisticated detectors with little prospect but that of establishing improved upper limits on the monopole flux. The chance of actual discovery is slim, but the stakes are as enormous as ever: Few discoveries would have a comparable impact on physics. The observation of a monopole would at once place experimental physics at mass scales many orders of magnitude beyond the standard model and at epochs remote compared to the element synthesis era[1].

In the context of schemes which attempt a unification of strong and electroweak effects, the monopole surely exists. On the other hand, the hapless experimenter finds little guidance as to its abundance, mass, velocity, intrinsic electric charge, whether it arrives with an attached proton, or whether it catalyzes nucleon decay. From Parker's work[2] and present experiments[3] we know only that the flux must be low. The monopole predicted by grand unified theories has a mass near 10^{16} GeV, but unless it has nearly the Planck mass it cannot have remained bound to the galaxy. We expect it to be traveling at close to 10^{-3}c: a faster monopole cannot be bound to the galaxy and could have been detected in earlier experiments; and a monopole could be moving more slowly only in the unlikely case that it has somehow managed to orbit a star or planet.

Thanks to the absence of bright neutron stars, we can infer with fair safety either that monopole catalysis does not exist or that the monopole flux is far below any level we might detect terrestrially[4] -- in particular, it must be well below the flux limits given by nucleon decay detectors based on the rate of monopole-induced catalysis[5]. Nevertheless, one loophole (catalysis via the weak anomaly[6]) makes continued terrestrial catalysis searches with nucleon decay detectors worthwhile.

Among other experiments, only magnetic induction detectors actually measure the magnetic charge of a passing particle independently of any other considerations. Unfortunately, such detectors are the most expensive to build per unit area. Scintillation devices and gas-filled atomic induction detectors[7] are the only other viable candidates for large detectors of slow monopoles.

In the case of charged monopoles, it has been clear for some time[8] that a low-threshold scintillation detector could detect monopoles down to $\beta \gtrsim 6 \times 10^{-4}$; recently, however, Ficenic et al.[9] have detected the light from protons with velocities 2×10^{-4}c in plastic scintillators. The various velocity cutoffs discussed over the past several years thus appear not to exist. In the case of a bare monopole (or a negative dyon with an attached proton), a gas-filled atomic induction detector can also operate down to the 10^{-4}c level.

The possibility that the monopole carries an electric charge offers the most reasonable way to escape from the remarkable limits set by Price and co-workers[10] using the absence of fossil tracks in ancient mica. A charged monopole would avoid energy loss via atomic induction, so the helium-quencher proportional wire chambers would not work as advertised;

but on the other hand, conventional excitation/energy loss mechanisms would work even better because of the electric charge. A combination of scintillator and atomic induction detectors therefore seems to cover all possibilities down to roughly 10^{-4}c.

In the following we consider the prospects for large magnetic induction detectors at Stanford, Chicago-Fermilab-Michigan, and IBM; describe the very large scintillation detector which has recently begun operation in the Homestake Mine; and discuss the even larger scintillator-track etch-streamer tube detector (MACRO) to be constructed in the Gran Sasso laboratory.

Large Scale Superconductive Detectors

Superconductive technologies have led naturally to very sensitive detectors for

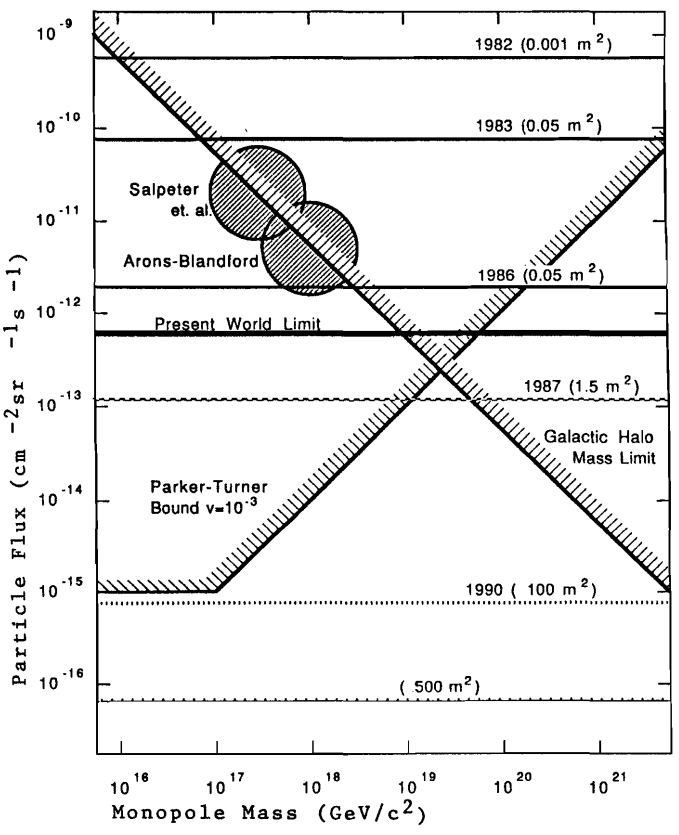

Fig. 1. Cosmic ray monopole flux limits from superconductive detectors compared with various astrophysical limits. The dotted line labelled "1990 (100 m^2)" refers to either a very large superconducting array or the existing Homestake scintillator detector.

magnetically charged particles[11]. These superconductive detectors directly measure the magnetic charge independently of particle velocity, mass, electric charge and magnetic dipole moment. Because of their velocity-independent response, superconductive detectors would unquestionably provide the most definitive positive identification of a magnetic charge. In fact, it is our belief that any interesting slow particle signals seen by other detection schemes will motivate the construction of sufficiently large superconductive arrays.

Current efforts to search for cosmic ray monopoles with superconductive detectors are summarized in Fig.1. Several relevant astrophysical bounds are also shown for comparison. The Parker bound as modified to include supermassive monopoles has a mass-independent floor near 10^{-15} cm^{-2}sec^{-1}sr^{-1} and rises linearly with mass above 10^{17} GeV/c^2 until it intersects the local dark matter bound around the Planck mass (10^{19} GeV/c^2). Since more recent unification theories suggest a monopole mass approaching the Planck mass, searches at a flux level of 10^{-13} cm^{-2}sec^{-1}sr^{-1} are already important. Also shown in Fig. 1 are the results of two calculations[12] suggesting possible monopole flux levels 2 - 3 orders of magnitude above the Parker bound, based on monopole-plasma oscillations within the galaxy. Detailed computer simulations performed by the Cornell group confirm the stability of such solutions; no galactic observations rule them out.

The lowest existing monopole flux limit based on a superconductive search has been obtained by the Stanford three loop detector[13,14] (4.4 x 10^{-12} cm^{-2}sec^{-1}sr^{-1} at 90% c.l.). At this level, monopole-plasma oscillation models are more difficult. The measured limit is within a factor of 20 of the peak of the Parker bound. Four other groups (Chicago-Fermilab-Michigan[15]; IBM Yorktown Heights[16]; Imperial College[17]; and NBS Boulder[18]) have obtained similar limits, so that the world limit is now within only a factor of 3 of the peak for the mass-dependent Parker bound (monopole mass 3 x 10^{19} GeV/c^2).

The Stanford, CFM, and IBM groups have

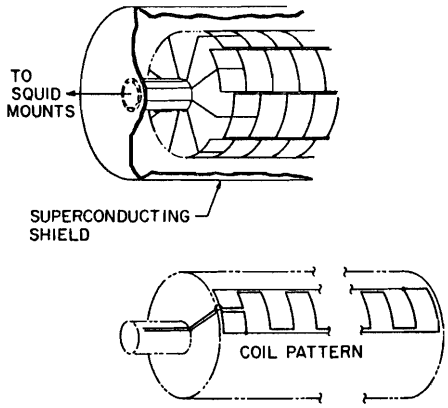

Fig. 2. Schematic of new eight-SQUID 1.5 m^2 Stanford superconductive detector.

all now constructed larger superconductive detectors with 1 m^2 x 4π sr sensing areas. Each of these new detectors, which are now beginning to be brought into operation, will surpass the peak of the Parker bound in three years of operation.

In particular, the Stanford group has completed the construction of a > 1.5 m^2 times 4π sr detector[14]. This detector, shown schematically in Fig. 2, is composed of eight planar superconducting detection coils arranged around a cylinder with an octagonal cross section. Each coil is a gradiometer 16 cm wide x 6 m long and is connected to a high sensitivity rf SQUID current sensor. The entire assembly is surrounded by a superconducting lead shield and housed in a dewar which is itself enclosed in a μ-metal shield. This detector has a sensing area 30 times larger than that of the Stanford three loop device.

A very important design feature for the large scale use of superconducting coils as monopole detectors is the use of a gradiometer winding pattern, suggested independently by the CFM and IBM groups. The sensitivity of a gradiometer to external magnetic field changes is substantially reduced over that for a simple coil, whereas the sensitivity to the passage of a magnetic charge remains high since the particle passes through only one element of the gradiometer pattern. A further improvement, suggested first by the CFM group, is achieved by breaking the loop up into a number of parallel elements which are connected together to one SQUID. This technique reduces the coupling losses to the SQUID from a 1/L proportionality to $1/\sqrt{L}$, where L is the inductance of the single series loop.

The new 1.5 m^2 monopole detector uses eight low-noise SQUID systems, one for each panel of the detector array. In addition, a shield of high magnetic permeability μ-metal surrounds the detector and shields it from the Earth's magnetic field as the inner superconducting lead shield goes through its transition temperature during the initial cooldown. A closed-cycle liquid helium refrigeration system provides continuous operation for the detector, enabling the experiment to achieve essentially 100% live time.

A computer-based data acquisition system monitors the detector. High bandwidth data around any interesting events will be provided by a trigger circuit. In addition, a number of "counter-insurgency" devices are monitored to guard against spurious signals. The most important signal characteristic for a monopole candidate would be coincident Dirac size offsets in two and only two of the eight SQUID channels. To date such a coincidence requirement has proven extremely effective at eliminating all spurious signal sources.

The 1.5 m^2 detector, as well as those being built by the CFM and IBM groups, is considered a prototype for a future superconductive array with a sensing area at least 100 m^2 x 4π sr. Such an array would surpass the mass-independent Parker bound floor in three years of operation (see Fig.1).

The Homestake Monopole Detector

The Homestake group[19] has developed a very large area (128 m^2) detector sensitive to slow ($\beta \gtrsim 10^{-4}$) monopoles by building an array of thick, low-threshold (0.1 x minimum ionizing) scintillation detectors with electronics capable of recognizing slow particles. The Homestake Large Area Scintillation Detector (LASD) is designed to study underground muons, neutrinos, and magnetic monopoles in the exceptionally low-background environment

at the 4850 ft level (4200 meters water equivalent) in the Homestake Gold Mine. The scintillation detector, consisting of 200 scintillator modules with 140 tons of liquid, surrounds the Homestake perchlorethylene solar neutrino tank. Each module is a 30 cm x 30 cm x 8 m box arrayed along the surfaces of an 8m x 8m x 16 m volume (Fig. 3). The individual modules are constructed out of 6 mm thick PVC sheets folded and welded into the form of boxes. The boxes are filled with a mineral-oil based liquid scintillator specially developed for this experiment and designed for its high transparency, long-term stability, relatively low flammability and toxicity, and low cost. The scintillation light is viewed by two 13 cm diameter hemispherical photomultiplier tubes in each box, one immersed in the oil at each end. The inside of each box is lined with a thin teflon film for total internal reflection.

A charged particle passing through an LASD module produces a pulse of light at each of the two phototubes in that module. From the relative amplitudes and arrival times, the position, time, and energy deposit can be determined. A through-going minimum ionizing muon deposits approximately 56 MeV in a single module. In order to obtain the best possible sensitivity to slow, lightly-ionizing massive monopoles, thresholds are set exceptionally low. By placing a ^{60}Co source (1.2 and 1.3 MeV gamma rays) at a fixed distance of 2 m from each end of each module, and setting the phototube threshold near the upper end of the Compton scattered electron spectrum, thresholds are obtained varying from below 1 MeV near the phototube to approximately 3 MeV at the far end of the module.

Given the theoretical uncertainty in the exact level of the scintillation light yield expected from a slow monopole, the design philosophy was simply to make a thick scintillator and push the threshold level down as far as permitted by the radioactivity background. Ficenic et al.[9] have recently measured the light yield of slow protons in plastic scintillator, however. They placed a 3 mm thick slice of NE110 scintillator in a 24 keV neutron beam at the BNL High Flux Beam Reactor

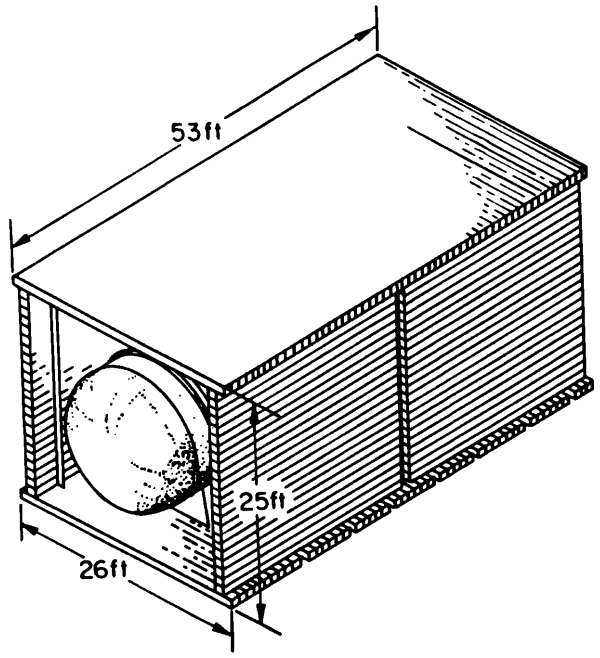

Fig. 3. Homestake Large Area Liquid Scintillation Detector. The 200 30 cm x 30 cm x 8 m boxes are filled with extremely transparent liquid scintillator and viewed by phototubes at each end. The monopole detector surrounds the C_2Cl_4 solar neutrino tank.

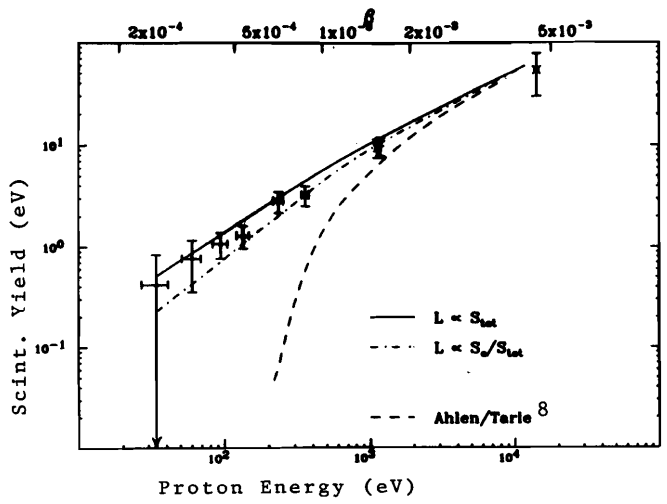

Fig. 4. BNL reactor results[9] of scintillator light yield vs. proton energy.

and measured the scintillation yield from the recoil protons over the velocity range 2 x 10^{-4} - 5 x 10^{-3}c (Fig. 4). They saw no low-velocity cutoff in the light yield, and concluded that a bare monopole would produce a signal at or above the minimum ionizing level down to at least $\beta \sim 10^{-4}$.

The monopole search imposes unique

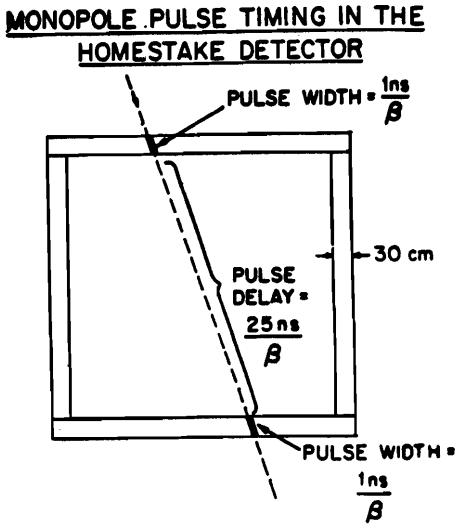

Fig. 5. Monopole pulse timing. The event must satisfy constraints on the pulse width in the entering and exiting modules, the time delay between modules, and the pulse heights.

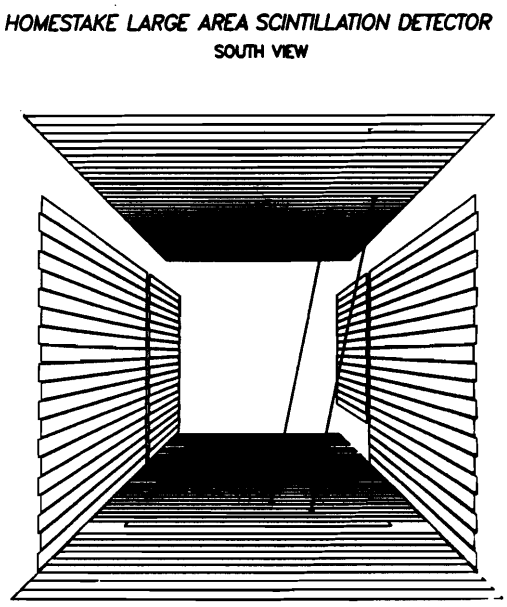

Fig. 6. Muon pair events in the Homestake LASD.

requirements on the trigger and pulse shape recording circuits. A muon traverses a single 30 cm scintillator module in 1 nsec, crosses the 8 m detector in 25 nsec, and exits through another module in 1 nsec; a $\beta = 10^{-4}$ monopole is characterized by a 10 μsec pulse or train of pulses in the entering module, a 250 μ sec delay time, and another 10 μsec pulse in the exiting module (Fig. 5). To recognize these slow pulses and the long transit time of the

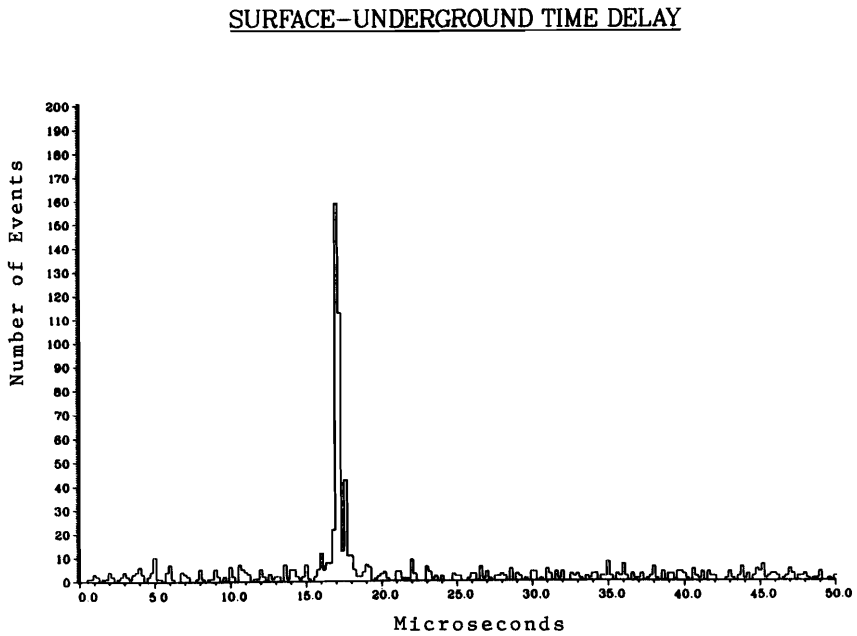

Fig. 7. Distribution of time delays measured between the surface air shower array and the underground LASD.

monopole across the detector, each photomultiplier tube is provided with both a fast (2.5 nsec) timing circuit and an individual transient pulse recorder which allows digitization of individual pulse heights every 20 nsec with 7 bit resolution over a memory span of 200 μ sec.

The detector has been accumulating muons since Jan. 1985. Fig. 6 shows a view of the detector looking from the south (the left in Fig. 3). Two muons pass through two top modules separated by approximately 1.5 m, pass downward through the perchlorethylene tank, and exit through two bottom modules 25 nsec after they enter the top. The position resolution of ±17cm gives a corresponding angular resolution of 34 cm / 8 m = 2.5^{o}.

The position and directional reconstructions and the detector performance can be checked by studying the arrival directions of events passing through both the underground detector and a surface air shower array. A clean sample of surface-underground coincidences can be obtained by measuring the time delay between shower and underground events. The measured distribution of time delays is shown in Fig. 7, with a signal-to-background ratio in the peak bin of 80. The rate of

surface-underground coincidences is 2.2/day, corresponding to a surface threshold energy 3×10^{14} eV. The measured underground directions are consistent with the surface-underground directions to within 2.5^{o}. The measured vertical muon rate is 1.8×10^{-9} $cm^{-2}sec^{-1}sr^{-1}$.

The transient recorders and full monopole electronics were installed during the summer of 1986. The monopole experiment is now operating, with an aperture of 1200 m^2sr, corresponding to one event in three years at a flux level of 9×10^{-16} $cm^{-2}sec^{-1}sr^{-1}$.

The Gran Sasso MACRO (Monopole, Astrophysics, and Cosmic Ray Observatory) Detector

A detector capable of reaching the Parker limit in under one year of operation is now under construction by an American-Italian collaboration[20]. MACRO, to be installed at a depth of roughly 4000 mwe in the Gran Sasso Laboratory east of Rome, is an ensemble of independent monopole detectors designed to provide very large area and a high degree of redundancy. When complete, MACRO will have a planar surface area of approximately 1400 m^2, corresponding to a collecting power of 12000 m^2sr. The detector (Fig. 8) consists of 700 tons of liquid scintillator with individual module dimensions 12 m x 0.75 m x 0.25 m, completely enclosing the 110 m x 12 m x 5 m detector volume. Inside this volume lies a set of nine horizontal planes of limited streamer tubes which give tracking information and provide sensitivity to very low-velocity bare monopoles though the atomic induction mechanism[7]. The streamer tube planes are separated by containers of crushed rock, giving the detector a 3 GeV threshold for penetrating muons. (This aspect of the detector design, although not particularly relevant to monopole detection, is important for another of MACRO's physics goals, neutrino astronomy.) Finally, a 110 m x 12 m stack of CR-39 and Lexan plastic track detectors is located at the center of the detector. Analysis of the track detector sheets will take place only if a valid monopole candidate is detected.

The liquid scintillator modules are based closely on the Homestake design, differing only in their dimensions and the phototubes used. In MACRO each end of the scintillator tanks will contain two 8-inch Hamamatsu R1408 phototubes, matched for gain and tied together at the anode and at one of the dynodes in the middle of the chain. The anode and dynode signals, summed over the four phototubes in each module, are routed to separate 11-bit waveform digitizers (WFDs). The anode signals are sampled at 20 MHz in a 16 μsec window, while the dynode signals are sampled at 100 MHz in a 6.6 μsec window, thereby covering the entire range of possible monopole velocities. In addition, the 100 MHz sampling rate of the dynode signals gives improved definition to the large, fast pulses produced by high velocity monopoles or muons. A TDC/ADC system driven by the summed anode signals from either end of each module provides fast timing and pulse height information independent of the WFDs.

In keeping with the design philosophy, each liquid scintillator module will be equipped with its own monopole trigger. At the moment, several designs are being considered and will be tested on the first detector subsection, to be built next year. The monopole triggers fall into two groups. The first uses the time development of the phototube signal, generating a trigger for pulses with durations above a certain level. The second type of trigger being considered integrates the signals from both ends of the box with a time constant of 6 μsec and uses these signals to calculate an energy and position in the box. A trigger is generated when the energy deposition exceeds a threshold value expected to be of order 0.1 times minimum ionizing. Monopole discrimination then takes place at the software level.

The limited streamer tubes each consist of extruded PVC having a rectangular cross section of 3 cm x 3 cm, with a 100 μ center wire. The interior of the PVC tube is coated with a resistive cathode. The signals are read off inductively on strips exterior to the tubes, and the signal centroid can then be calculated with approximately 1 cm resolution, corresponding to an overall angular accuracy of 0.2^{o}. The streamer tubes provide a measure

of redundancy in the monopole signature by taking advantage of the level-mixing mechanism of Drell et al[7]. Due to the enhancement in the ionization rate expected from level-mixing, the streamer tubes are sensitive to bare monopoles moving as slowly as $10^{-4}c$, whereas the velocity threshold would be closer to $10^{-3}c$ in the absence of the atomic induction effect.

The track etch detectors offer an additional monopole signature over a restricted range of monopole velocities. The threshold velocity for bare monopoles is $5 \times 10^{-3}c$ in CR-39 and 0.3c in Lexan. Diamagnetic effects may reduce the CR-39 threshold to as low as $5 \times 10^{-5}c$.

Construction of the first detector subsection (12 m x 12 m x 5 m) is now underway, and installation will begin with the completion of the laboratory in April 1987. Installation of the first subsection is due to be finished by late 1987. The remainder of the detector will be installed over the course of the next two years, with full operational capability scheduled for mid-1989.

Conclusions

Although the Parker limit is still only an upper bound to the possible flux of monopoles, existing large superconductive devices are already approaching the Parker bound at masses near 10^{19} GeV/c^2. By roughly 1990, either planned 100 m^2 superconducting detectors or the existing Homestake scintillation detector will provide data at the level of 10^{-15} cm^{-2} $sec^{-1}sr^{-1}$ (the mass-independent Parker bound). Finally, at a level of sensitivity an order of magnitude greater, construction of the MACRO scintillator-streamer tube-track etch detector is scheduled to begin in the Gran Sasso tunnel next spring.

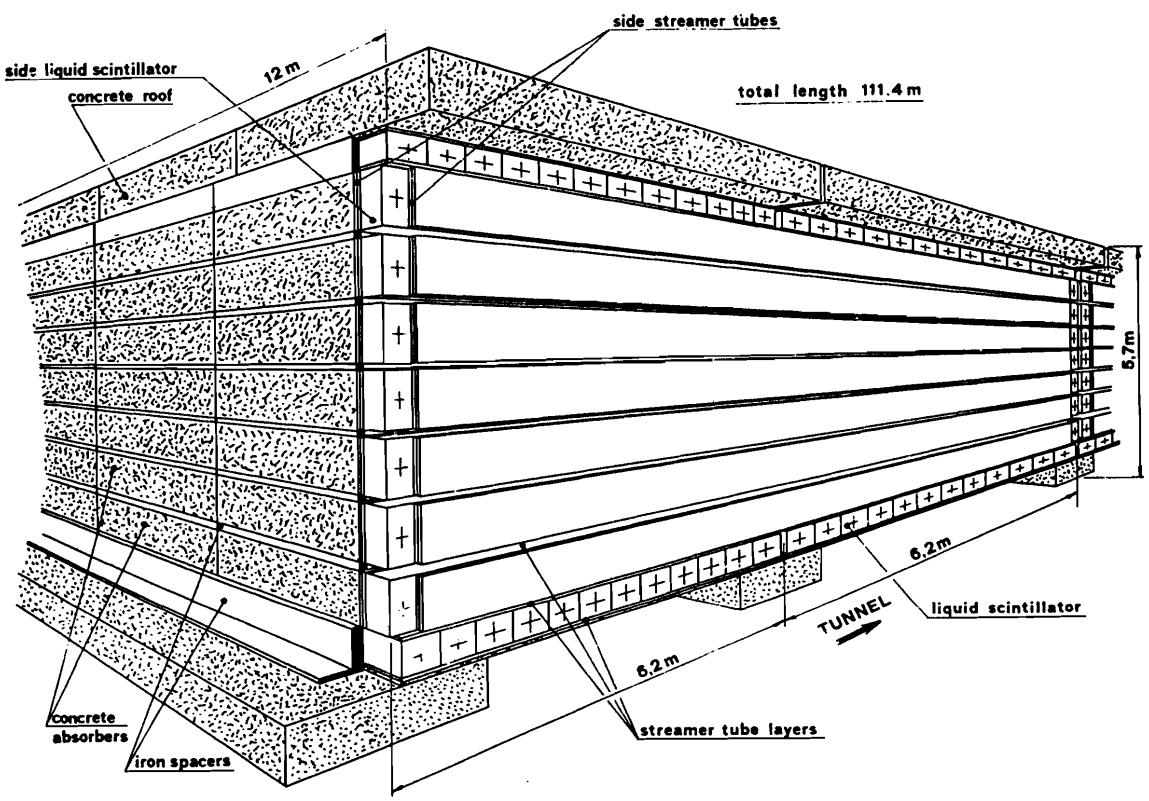

Fig. 8. Schematic of the MACRO detector showing the scintillator, streamer tube, and concrete absorber layers.

We thank the Snowmass organizers, and appreciate the funding support of the Dept. of Energy for these experiments.

1. J. Preskill, Ann.Rev.Nucl.Part.Sci. 34, 461 (1984); G. Giacomelli, La Rivista del Nuovo Cimento 7, No.12 (1984); D.E. Groom, Phys. Reports 140, 324 (1986); J.L. Stone, ed., Monopole 83, Plenum, NY (1984); Magnetic Monopoles, ed. by R.A. Carrigan and W.P. Trower, Plenum, NY (1983).
2. E.N. Parker, Ap.J. 122, 293 (1955); M.S. Turner, E.N. Parker, T.J. Bogdan, Phys. Rev. D26, 1296 (1986).
3. See the review by J.L. Stone, Inner Space/ Outer Space, ed. by E.W. Kolb et al., U. of Chicago Press, p. 356 (1986); also H.J. Frisch (p. 515), S.P. Ahlen (p. 625), and G. Giacomelli (p. 637) in Monopole '83 (1984).
4. E.W. Kolb, S.A. Colgate, J.A. Harvey, Phys. Rev. Lett. 49, 1373 (1982); S. Dimopoulos, J.R. Preskill, F. Wilczek, Phys. Lett. 119B, 320 (1982); K. Freese, M.S. Turner, D.N. Schramm, Phys. Rev. Lett. 51, 1625 (1983).
5. S. Errede et al., Phys. Rev. Lett. 51, 245 (1983); Monopole '83, ed. J.L. Stone, Plenum, NY, p.251 (1984).
6. F. Wilczek, Phys. Rev. Lett. 48, 1146 (1982).
7. S.D. Drell et al., Phys. Rev. Lett. 50, 644 (1983).
8. S.P. Ahlen and K. Kinoshita, Phys. Rev. D26, 2347 (1982); S.P. Ahlen and G.Tarle, Phys. Rev. D27,688 (1983); D.M. Ritson, SLAC-Pub-2950, unpublished (1982).
9. S.P. Ahlen and G. Tarle, Phys. Rev. Lett. 55, 181 (1985); D.J. Ficenic, S.P. Ahlen, A.A. Marin, J.A. Musser, G. Tarle, submitted to Phys. Rev. Lett. (1986).
10. P.B. Price et al., Phys. Rev. Lett. 52, 1265 (1984).
11. B. Cabrera, Phys. Rev. Lett. 48, 1378 (1982).
12. E.E. Salpeter, S.L. Shapiro, I. Wasserman, Phys. Rev. Lett. 49, 1114 (1982); J. Arons and R.D. Blandford, Phys. Rev. Lett. 50, 544 (1983); R. Farouki, S.L. Shapiro, I. Wasserman, Ap.J. 284, 282 (1984).
13. B. Cabrera, M. Taber, R. Gardner, J. Bourg, Phys. Rev. Lett. 51, 1933 (1983); and B. Cabrera, R. Gardner, R. King, Phys. Rev. D31, 2199 (1985).
14. R. Gardner, B. Cabrera, M. Taber, M. Huber, LT-17, ed. by U. Eckem, A. Schmid, W. Weber, H. Wuhl, Elsevier (1984); and M.E. Huber, B. Cabrera, M.A. Taber, R.D. Gardner, IEEE Magnetics, to be published.
15. J. Incandela, M. Campbell, H. Frisch, S. Somalwar, M. Kuchnir, A. Gustafson, Phys. Rev. Lett. 53, 2067 (1984).
16. S. Berman, P. Chaudhari, C.C. Chi, C.D. Tesche, C.C. Tsuei, Phys. Rev. Lett. 55, 1850 (1985).
17. A.D. Caplin, C.N. Guy, M. Hardiman, J.G. Park, J.C. Schouten, Nature 317, 234 (1985).
18. M.W. Cromar, A.F. Clark, F.R. Fickett, Phys. Rev. Lett. 56, 2561 (1986).
19. M.L. Cherry, S. Corbato, T. Daily, D. Kieda, K. Lande, C.K. Lee, Il Nuovo Cimento 9C, 210 (1986); and Intl. School of Cosmic Ray Astrophysics, Erice, to be published (1986).
20. MACRO Collaboration, Il Nuovo Cimento 9C, 281 (1986).