DETECTION OF W DECAY INTO $e\nu$

Benedict Y. Oh*
The Pennsylvania State University, University Park, PA 16802

A great deal of important physics at the SSC energy must rely on the detection of the W into the leptonic modes $e\nu$, $\mu\nu$ and possibly $\tau\nu$ [1]. In this note we report on the reconstruction of the W boson via its decay into the $e\nu$ channel, carried out with the calorimeter simulation based on the DZERO-SIM technique [2]. This study shows that with the hermetic fine-grained calorimeter ($\Delta\eta\cdot\Delta\phi$ = 0.06·0.06, covering ±5 units of rapidity), together with the electron identification, one can reconstruct approximately half of the $W \to e\nu$ decays with reasonable kinematic cuts.

The Monte Carlo events for our study are generated with ISAJET 5.22 [3]:

$$pp \to W(\to e\nu) + W(\to \text{jets}) + \text{jets} \qquad (1)$$

$$pp \to W(\to e\nu) + \text{jets} \qquad (2)$$

with various p_T of the W (100, 200, 300, 400 and 500 GeV; 100 events for each of the p_T's and for reactions (1) and (2), thus a total of 1000 events; $\sqrt{s}$ = 40 TeV). An example from reaction (1) (with p_T = 300 GeV), displayed in Fig. 1, clearly exhibits the complexities of the events due to gluon radiations. We also limit ourselves to the W rapidity range $-4<\eta(W)<4$. The cross section ratio of the two reactions is ~ 1/250 and varies very little as a function of the p_T for the rapidity range under study.

The calorimeter [4] for this study consists of hermetic arrays of barrel, endcap and plug sections with uniform segmentation $\Delta\eta\cdot\Delta\phi$ = 0.06·0.06 and rapidity coverage of ±5 units, as shown in Fig. 2. As for the detection medium we take U-liquid Ar (X_0=0.90 cm, λ= 25 cm for the EM section; X_0=0.60 cm, λ=18 cm for the hadronic section) with total radiation lengths of 28 $X_0(1\lambda)$ in the EM sections and 11λ in the hadronic sections. The EM and hadronic energies from all the particles are then allowed to deposit in the calorimeter cells according to the energy resolutions (E in GeV)

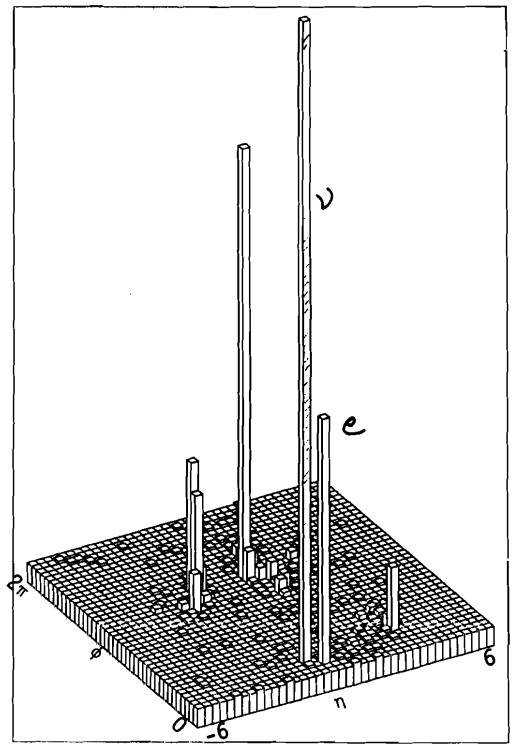

Fig. 1: A η-ϕ plot of reaction 2 with p_T = 300 GeV. The p_T of the ν and e are 266 and 101 GeV respectively.

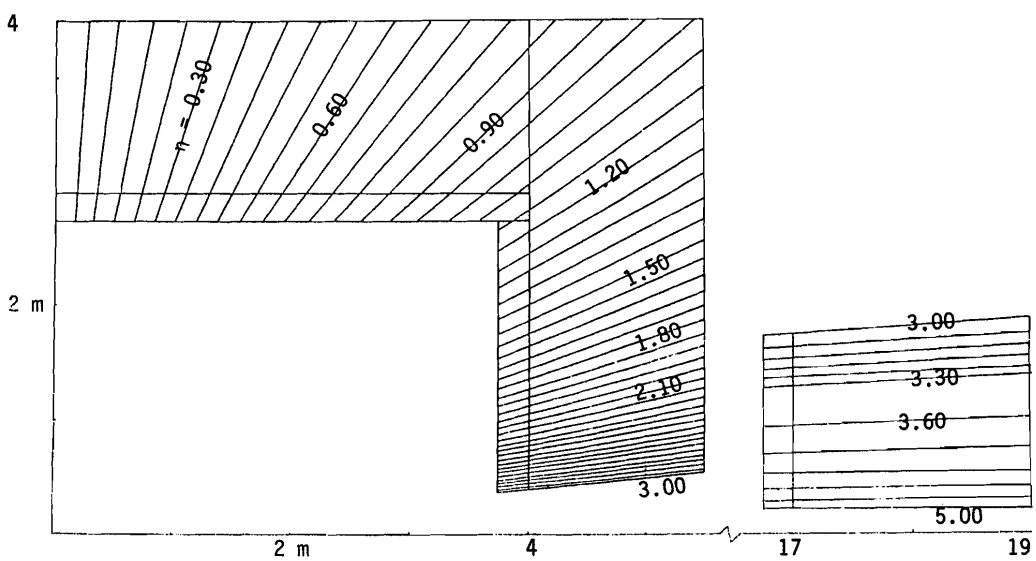

Fig. 2: Layout and segmentation of the calorimeter used in this study.

$$\frac{\sigma}{E}(EM) = \frac{0.15}{\sqrt{E}}$$

$$\frac{\sigma}{E}(had) = \frac{0.56}{\sqrt{E}} \quad .$$

With the calorimeter data, the missing transverse energy ($\not{E}_T$) and azimuthal angle are measured. At this point we assume that the entire $\not{E}_T$ is due to the neutrino from the W (correct 80(90)% of the time for reaction 1(2)). We further assume that all the electrons in an event would be identified and assume the highest-p_T electron to be due to the W decay (correct 96(99)% of the time for reaction 1(2)). We then constrain the electron track and $\not{E}_T$ to form a W (two solutions for the rapidity variable of the neutrino and hence of the W) and assume that the solution which gives lower absolute value of W-rapidity to be the solution (correct ~ 60% of the time for both reactions). The last assumption (not justified as the W production cross section $d\sigma/d\eta(W)$ is rather flat, which means that we have guessed right half of the time) is made merely for the purpose of definite comparisons with the generated W kinematics. One other point which should be made is that some events (~ 30 out of 100 on the average), either due to multineutrinos missing or kinematics smearing, or both, give no kinematically acceptable constraint for $W \to e^- + \not{E}_T$. These details are given in Table 1.

Table 1: Breakdown of Events

Reaction and $p_T(W)$	A	B	C	D	E
1 100 GeV	94	78	66	74	51
200	96	82	63	63	45
300	95	84	64	73	57
400	96	78	56	68	46
500	97	79	51	65	43
2 100	100	98	67	62	59
200	99	90	59	70	60
300	99	88	65	74	62
400	98	77	48	74	51
500	98	86	60	72	58

A. Number of events in which the highest p_T e^- is from $W \to e\nu$ (ISAJET).

B. Number of events with single neutrino (ISAJET).

C. Number of events with smaller $|\eta(W)|$ being correct solution (ISAJET).

D. Number of events with kinematically acceptable solution of $W \to e^- \not{E}_T$ (calorimeter).

E. Number of events from column D with single neutrino (calorimeter and ISAJET).

With the assumptions of the previous paragraphs, we then calculate the $\phi(W)$ and $\eta(W)$ from the calorimeter data, i.e. when the solutions are available and compare against the ISAJET kinematics. In Fig. 3 we show the variable ΔR defined as

$$\Delta R^2 \equiv [\phi(W,cal)-\phi(W,ISA)]^2+[\eta(W,cal)-\eta(W,ISA)]^2$$

for the various p_T data of reactions (1) and (2). We note that nearly half of the total events (with no cuts) are found within $\Delta R<0.3$ (5 cells). The uncertainty of the ΔR is largely due to the two possible solutions of

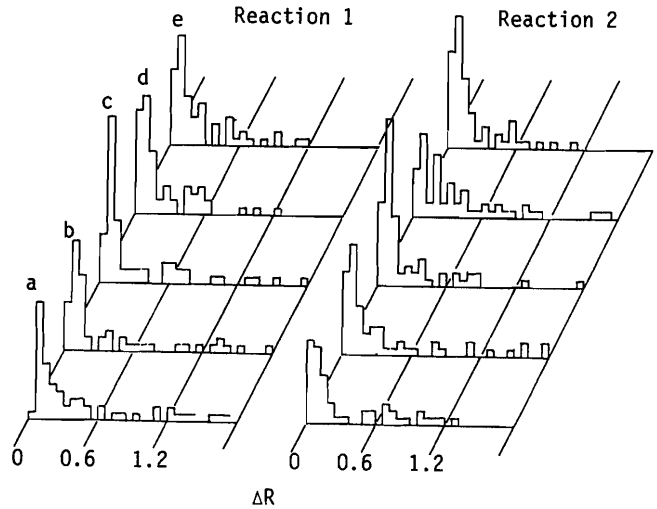

Fig. 3: The ΔR of the W between calorimeter and ISAJET data: 1a-1e(2a-2e) are for p_T = 100, 200, 300, 400 and 500 GeV of reaction 1(2).

$\eta(W,cal)$ discussed above.

The comparisons of the p_T values between calorimeter measurement and ISAJET input, in terms of

$$\Delta p_T \equiv p_T(W,cal) - p_T(W,ISA) \ ,$$

are shown in Fig. 4. As expected Δp_T spreads out more for the higher p_T data. However, roughly half of the total events are found within the range $|\Delta p_T|/p_T<0.15$.

It should be emphasized that in Figs. 3 and 4 we pretended our ignorance about the W (and other missing particles) and compared our solutions against the generated kinematics. That we find a reasonable comparison is largely due to (a) the hermeticity; (b) fine-grain segmentations of the calorimeter; (c) the assumed e identification; and (d) no pile-up from different events. This study, despite the pragmatic approach of

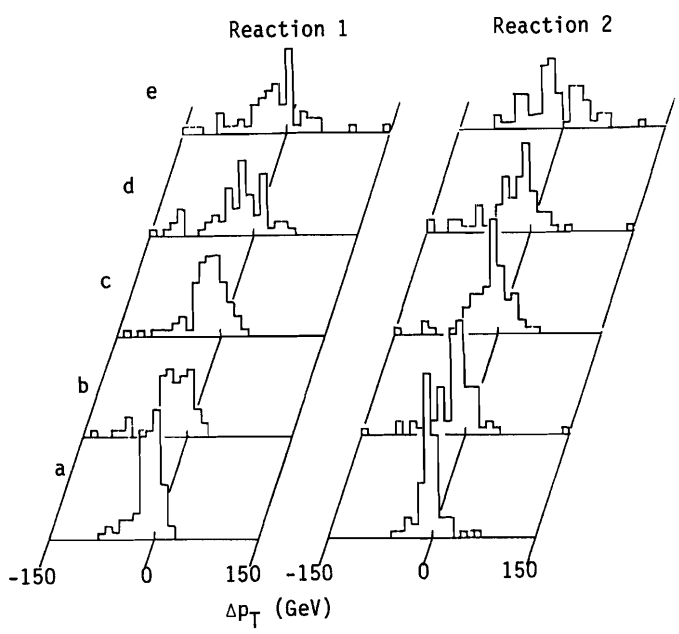

Fig. 4: The Δp_T of the W between calorimeter and ISAJET data; see Fig. 3.

the DZERO-SIM technique, suffers from the fact that in a real experiment these idealizations must be relaxed. Therefore, this study should only serve as a lower limit of the resolutions for the detection of the W in the $e\nu$ mode.

Finally, we add one further observation about the $W \to e\nu$ decay, that of W^- helicity measurement (perhaps the most important physics being the Higgs decay into longitudinally polarized W's). Thus we calculate the W decay angle θ (i.e. that of the neutrino in the W c.m. with respect to the W flight direction) for the calorimeter data and compare against the ISAJET data for the same event samples used in Figs. 3 and 4. As we see in Fig. 5 (p_T = 300 GeV data of reaction (1)), calorimeter

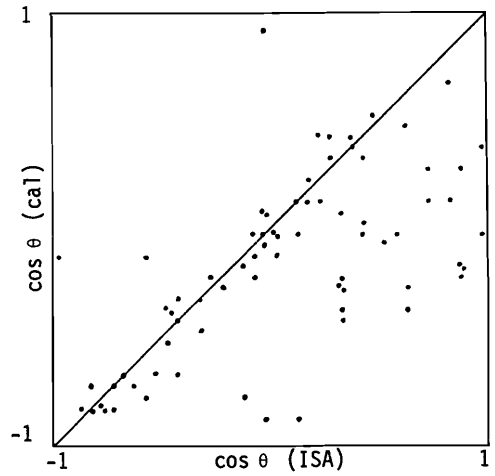

Fig. 5: The cos θ (θ being W decay angle) between calorimeter and ISAJET data of reaction (1) with p_T = 300 GeV.

data reproduces ISAJET input to a large extent. Again the double solutions for the longitudinal momentum of the neutrino spoil the complete overlap.

The generous assistance which the author received from Serban Protopopescu in the early stage of this work is gratefully acknowledged.

References

[1] For example J.F. Gunion, these proceedings.
[2] S.D. Protopopescu, these proceedings.
[3] F.E. Paige and S.D. Protopopescu, Workshop on Observable Standard Model Physics at the SSC: Monte Carlo Simulation and Detector Capabilities, UCLA, 1986.
[4] Report of the Task Force on Detector Research and Development for the SSC, SSC Central Design Group, LBL, 1986.

* Work supported in part by the National Science Foundation.