WORKSHOP ON THE FEASIBILITY OF HADRON COLLIDERS IN THE LEP TUNNEL

Organized under the Joint Sponsorship of ECFA and CERN

LAUSANNE AND CERN

21-27 MARCH 1984

SUMMARY REPORT*)

By the Organizing Committee

G. Brianti, CERN; W. Hoogland, NIKHEF; M. Jacob, CERN;
C. Joseph, Lausanne; J. Mulvey, Oxford; C. Rubbia, CERN;
J. Sacton, Brussels

*) Copies available upon request from the Secretariat of the Workshop, Ch. Petit-Jean-Genaz, CERN/LEP.

A B S T R A C T

A Workshop, jointly organized by ECFA and CERN, has taken place at Lausanne and at CERN in March 1984 to study various options for a pp (or $p\bar{p}$) collider which might be installed at a later date alongside LEP in the LEP tunnel. Following the exploration of e^+e^- physics up to the highest energy now foreseeable, this would open the opportunity for investigation of hadron collisions in the new energy range of 10 to 20 TeV in the centre of mass. This summary describes the Workshop, its aims, organization and programme, and presents the general conclusions which it leads one to formulate at this stage. It is but an introduction to the proceedings which will put together specialized reviews and the complete reports of the different working groups and which will be published in due course as an ECFA-CERN report.

TABLE OF CONTENTS

1. Introduction

2. The Lausanne-CERN workshop

3. The physics case

4. The large hadron collider. Possible options

5. Experimentation at a multi-TeV hadron collider

6. Conclusions

APPENDIX A Programme of the open meeting at CERN presenting the conclusions of the Workshop

1. INTRODUCTION

CERN is at present building LEP and preparing for the exploitation of LEP up to the highest energy now foreseeable. The physics case for LEP now appears even stronger than it was when formulated in 1978-79[1], in the course of workshops and meetings organized by ECFA and CERN which demonstrated the widespread support and enthusiasm of the European high energy physics community for the project and led to its approval in 1981. Now the impressive results of the CERN $p\bar{p}$ collider, with the discovery of the weak intermediate bosons and the extraordinarily clear emergence of hadronic jets, have confirmed the most optimistic statements which could be advanced earlier for the interest of physics at LEP.

The installation of a hadron collider in the LEP tunnel, using superconducting magnets, has always been foreseen by ECFA and CERN as the natural long term extension of the CERN facilities beyond LEP. Indeed, such considerations were kept in mind when the radius and size of the LEP tunnel were decided. The recent successes of the CERN $p\bar{p}$ collider now give us confidence that such a new collider would be an ideal machine to explore physics in the few TeV range at the constituent (quarks and gluons) level, a domain which the very success of the standard model now leads one to consider as crucial to a deeper understanding. Indeed, the present enthusiasm for the superconducting-super-collider (SSC) in the United States bears witness to the impressive potential of such machines.

While the installation of a hadron collider in the LEP tunnel may at present be considered as a possibility rather remote in time, it was deemed appropriate to have a rather thorough discussion of this possibility now, for two main reasons.

The first one is the scheduling of an ICFA meeting on future perspectives for high energy physics in Tokyo in May 1984. The physics potential is great and possibilities in Europe have to be presented there together with studies presently under way in the United States. The second one is that, if such a machine is ever installed in the LEP tunnel, it will have to use the facilities offered, stretched as far as possible within the available technological and financial possibilities. This clearly implies using magnets of the highest performance within reasonable cost limitations. If one, for instance, considers 10 T magnets, one immediately realizes that

important research and development studies have still to be done. Such studies which, even if energetically pursued, could require a few years, may be considered as a prerequisite for the definition of the parameters of such a machine. When considering magnets, even a distant goal demands a rapid start. A workshop bringing together theorists, experimentalists, accelerator physicists and experts in superconducting magnet design was thus considered to be timely.

As stressed by G. Brianti and J. Sacton during the Workshop, constructing such a machine in the LEP tunnel would allow one to reap benefits from many important features. CERN, with its present versatile and efficient accelerator complex, has demonstrated how existing machines can be most usefully and efficiently used for serving or developing more powerful ones. A hadron collider in the LEP tunnel would exploit the following.

i) The existence of an excellent proton injector.

ii) The availability of a good and reliable $\bar{p}$ source.

iii) The LEP tunnel and its associated infrastructure which could readily be used for its installation. There is adequate room available alongside LEP.

iv) The expertise with proton beams, in particular with bunched beams, and with the operation of a complicated chain of machines.

v) The depth of the tunnel which would ensure that no radiation would be released to the environment.

vi) The possibility of colliding the electrons of LEP with the protons of the hadron collider up to centre-of-mass energies of 2 TeV. Ion-ion collisions would also be possible.

vii) Last, but not least, the existence of a general laboratory infrastructure.

At present several options can be considered and questions worthy of detailed consideration during the Workshop were of course:

a) Should one aim at the highest possible magnetic field and reach, say, $\sqrt{s}$ = 18 TeV in the centre of mass, or would $\sqrt{s}$ = 10 TeV, which could be reached with magnets of well-mastered technology, already be very interesting?

b) Should one aim at a high luminosity, $L \sim 10^{33}$ cm^{-2} sec^{-1}, say, accessible with a two-ring pp collider, or would a luminosity of about 10^{31} cm^{-2} sec^{-1}, which could be achieved with a single ring $p\bar{p}$ machine, be enough for most experimental needs?

c) If one aims at the highest luminosity, should one consider bunching with small time separation (25 nsec, say), so that there would be only one event on the average per bunch crossing, or should one use a longer separation (150 nsec, say), less demanding on detectors, but then with several events for each bunch crossing?

d) If, in order to reach the highest luminosity, one takes the pp two-ring option, is it important to remain versatile enough to be also able to run in the $p\bar{p}$ mode albeit at lower luminosity?

The convener reports, summarized in Section 5, provide arguments in each case. The general conclusions seem to be:

i) The highest energy would be a valuable asset but there is no actual threshold known now. The key point is to have at least 10 TeV in the particle centre of mass in order to have typically at least one TeV at the constituent level. There is also a trade-off between energy and luminosity, a gain in luminosity for a loss in energy and vice versa.

ii) Production cross-sections for hitherto unknown objects, with mass M, are expected to be at most of order M^{-2}, hence a high luminosity is an important asset and there is no reason to think that 10^{33} would be too high for some detector systems. With several detector devices now foreseen, a small time separation between bunches, allowing one to have only one event on the average per bunch crossing, would be acceptable, and hence highly preferable.

iii) According to present wisdom, differences between pp and $p\bar{p}$ induced reactions would be in most cases too small to be detectable. Information from pp collisions should hence be enough.

The remaining sections of this summary are organized as follows. Section 2 describes the Workshop and readers already familiar with it do not need to read it.

Section 3 outlines the physics case for research in the few TeV range at the constituent level, as it appears today. The report of C.H. Llewellyn Smith in the proceedings, and the write-ups of the theory talks presented at Lausanne, also to be included in the proceedings, will discuss this in great detail. The report of G. 't Hooft puts the various questions thus considered in a broader perspective.

Section 4 is a summary of the very large amount of material discussing different machine scenarios with emphasis on the pp option. This will be covered in the proceedings by the report of the machine groups (convener, G. Brianti).

The conclusions which can be drawn are:

i) A proton-proton collider can be installed in the tunnel above LEP. A centre-of-mass energy of about 18 TeV could be reached with superconducting magnets of 10 T.

ii) In order to achieve this goal, it is necessary to launch in Europe a vigorous programme of development of materials and techniques necessary for the construction of such magnets. Several European Laboratories and Institutions express a great interest to participate in such a programme.

iii) All other machine components and systems appear to be feasible with the present technology.

In the CERN presentation (Appendix A). These topics were covered by G. Brianti (machine parameters), R. Perin (magnets), and M. Morpurgo (cryogenics). The contribution by H. Grunder is a report on the status of the SSC "reference design" which was still in progress in the United States at the time of the Workshop.

Section 5 puts together the key conclusions arrived at by the different working groups.

Section 6 summarizes the main conclusions of the Workshop.

2. THE LAUSANNE-CERN WORKSHOP

The interest of the physics, with several specialized workshops taking place in the US in connection with the SSC project, the long-range possibilities existing at CERN and the scheduling of an ICFA meeting for May, prompted ECFA and CERN to organize a Workshop in the early spring of 1984, during which European physicists could focus on possible options at CERN for a hadron collider installed in the LEP tunnel. It was deemed appropriate to limit the Workshop proper to a one-week meeting, with four days of discussion (21-24 March 1984) in Lausanne, with a limited number of participants, and summary presentations at CERN (26-27 March) at an open meeting. Through the winter, studies of machine design, magnets and cryogenics, have been underway at CERN with meetings during the course of these studies at which outside experts were invited to assess and comment on the progress of the work. The final decision with respect to the detailed programme and format of the Workshop was taken after two preliminary meetings at CERN in December 1983 and February 1984, respectively, which brought together about 40 leading particle physicists from the member states. After the first meeting, in December, the desirability of the Workshop was agreed and specialized working groups were swiftly set up. It was indeed clear that a large amount of work on the physics side had also to to be done before the Workshop proper, its limited time being most efficiently used for collecting together the gathered information, confronting ideas and drawing conclusions. As the proceedings will bear witness, a very large amount of work was invested in these studies.

On the experimental side, there were eight different groups but, of course, a large amount of cross-talk took place between them. They were, with their respective conveners:

i) Jets - P. Jenni
ii) Electron and photon detection - Ph. Bloch
iii) Muon detection - W. Bartel
iv) Tracking chambers - A. Wagner
v) Vertex detection - G. Bellini and P.G. Rancoita
vi) Triggering - J. Garvey
vii) Data acquisition - D. Linglin
viii) Forward physics - G. Matthiae

Groups iv) and v), and also groups vi) and vii) had clearly much in common and, in the former case, it actually led to a single presentation at CERN (Appendix A).

At Lausanne, the different groups worked in parallel, while exchanging members and making use of the contributions of some theorists and accelerator physicists. There were, however, two joint meetings in Lausanne, one on the second day and one on the last day, in which each group could in turn offer its tentative conclusions for a general discussion and collect feedback from the other groups.

On the theory side, several theorists agreed to summarize some preparatory work, most often done in collaboration with several colleagues, in talks presented at Lausanne. These talks were also attended by many experimentalists and had the dual role of presenting many relevant pieces of information and of triggering further discussion. Seven talks were presented and will appear in the proceedings. Five of them are directly relevant to hadron interactions in the multi-TeV range. They are:

Exotica and expected signatures - J. Ellis
Why is this energy range so interesting? - R. Barbieri
Extrapolation of standard effects - hard collisions - A. Ali
Extrapolation of standard effects - soft collisions - B. Andersson
Composite models - R. Peccei

The other two reflect the fact that theorists are free to extend their investigations to any a priori interesting question. The potential of ep collisions, as in principle accessible with LEP and a hadron collider in the same tunnel, was reviewed by G. Altarelli. The rather intense very high energy neutrino beams which one could obtain (for free) from the abundant production of charmed particles, were considered by A. De Rujula.

The prominent jets of today will provide a Bellwether-type of reaction when probing hadron constituent interactions in the multi-TeV range. This, however, deserved some thorough discussion.

Discussions at the Workshop also focused on rates and signatures for expected exotic particles, in particular on Higgses and on supersymmetric particles, and also on composite models. Many physicists kept an eye on the possible significance of the unusual events recently reported by UA1 and UA2[2]. One may consult the report of J. Ellis, which was scheduled as a plenary report in Lausanne, and the short reports by K. Gaemers and H. Fritzsch which altogether summarize the outcome of these discussions. They will appear in the proceedings.

On the accelerator side, as previously mentioned, a very large amount of work had already taken place before the Workshop and it was summarized to all the participants on the first day by G. Brianti. The magnet study group which had met previously independently of the Workshop convened in Lausanne for one day (the second one) and a panel discussion, covering the present state of the art in superconducting magnet design and technology, was organized in the late afternoon for all the participants to attend. Relatively few accelerator physicists attended the whole Lausanne part of the meeting, since the study of machine options had actually taken place earlier but they acted as welcome experts in discussions.

The Lausanne part of the Workshop involved about 150 people only, while the CERN presentation was open and attracted many people, with the Main Auditorium practically full most of the time.

Lausanne, actually the Bâtiment Propédeutique on the Dorigny Campus, offered the advantage of maintaining close and effective contact between CERN and non-CERN participants, with the CERN staff finding it easier to give their undivided attention. The premises, generously offered to us by the University of Lausanne, were actually ideally suited for the Workshop activities. The organizing committee would like to express its gratitude to Monsieur le Recteur Delessert, Monsieur le Doyen Masson and Monsieur le Directeur Administratif Pilloud, for the very warm welcome which they extended to us.

3. THE PHYSICS CASE

At present, our description of interactions at the fundamental level is based on gauge theory. The standard model combines the gauge theory of electroweak interactions based on the SU(2)×U(1) gauge symmetry, and the gauge theory of strong interaction based upon the SU(3) gauge symmetry of quantum chromodynamics. While it is possible that the standard model may be but the "low" energy residue of a higher gauge symmetry prevailing at much higher energies, its past and recent successes can be deemed a triumph. Indeed the discovery of the weak intermediate bosons at the $p\bar{p}$ collider, with their expected properties and production rates, is the pinacle of a series of successes not only for the electroweak theory but also for the present understanding of hadron structure in the framework of QCD. The latter point is further vindicated by the clear emergence of hadronic jets.

However, as happily always in physics, these brilliant successes should not be considered as only the end of an important chapter. They are also definitely the opening of a new one. Indeed, the standard model, with all its brilliant successes, does not explain enough. It merely describes interactions among actors which Nature presents with many different properties for whose origin we presently have very few clues.

What is the deep origin of mass and what are the relations between masses and symmetry breaking processes, such as those which are at work in the Higgs mechanism?

Why is there a repetition of the quark and lepton families which our present theory can merely only accommodate but not explain? The origin of the different flavours is still a riddle. So is the origin of CP violation.

What is gravitation and how does it relate to the other interactions as presently described in the framework of the standard model?...

While drawing up such a list probably takes us beyond what we may reasonably hope to learn by studying in detail physics at LEP and in the multi-TeV range, there is one question which one thinks one can approach

with success there: what is the nature of the symmetry breaking mechanism which is at work in the standard electroweak model?

We have an atavistic fascination for symmetries and it is a most pleasing feature that the interactions appearing in the standard model result from a gauge symmetry principle. However, this symmetry is somehow broken. Otherwise the W and Z would be massless like the photon and the fermions would be massless too, with no coupling between right-handed and left-handed particles. Experimentally, this is not the case. The standard model indeed includes symmetry breaking, introduced through the Higgs mechanism. However, the nature of the Higgs field immediately raises challenging questions.

Is the Higgs a fundamental field and if so why is the Higgs mass so light, when one might expect it to be driven up close to the GUT energy scale or even the Planck mass by radiative corrections? The answer may lie in the presence of supersymmetric particles, some of them, however, then with masses comparable to the energy scale characterizing the symmetry breaking of the electroweak interactions (say, the weak boson mass, or $G_F^{-\frac{1}{2}} \approx 250$ GeV).

Is the Higgs a bound state system of hitherto unknown fermion fields? One may recall that the pion is at the same time almost a zero mass field necessary for the spontaneous breaking of chiral symmetry and also a bound state of a quark and an antiquark. Though the connection between these two aspects of the pion is not yet well understood, a similar phenomenon could apply to the Higgs field. In such a case, there are good reasons to think, with the mass of the weak boson again providing the scale, that, at $\sqrt{s'} \sim 250$ GeV, where $\sqrt{s'}$ is the centre-of-mass energy at the constituent level, the Higgs field should disclose some structure and other members of a rich Higgs family could be met. Such an approach has been vigorously pursued under the heading of technicolour models.

Whichever way one looks at it, the properties which one now has to impose on the symmetry breaking mechanism lead one to expect new physics by the time one reaches 1 TeV at the constituent level, this however implying 10 TeV or so at the proton level.

When presenting the physics case for LEP[1] or for the $p\bar{p}$ collider[3], one could stress that reaching 100 GeV or more at the constituent level would lead us to new physics. This has already started at the collider and LEP is the ideal instrument to study it to the full. When presenting now the physics case for a multi-TeV hadron collider, one may say that reaching 1 TeV or more at the constituent level should again reveal new and fundamental insights. This is where to probe with every reason to expect success, the nature of the Higgs mechanism with, one way or the other: supersymmetry, extended technicolour,... a host of new particles.

This may, however, be too conservative and other adventures may even be just "around the corner". The $p\bar{p}$ collider already provides us with unusual events, rare but frequent enough to raise fascinating questions[2]. Particles which we consider elementary (quarks, weak bosons, ...) may actually be composite and this at an energy scale of the order of the one presently probed (10^{-16} cm). If this is the case, particle physics in the 100 GeV range is already showing, though as yet in a timid way, a wealth which goes much farther than the standard model. A gain in energy is then just a necessity in our quest for a better understanding.

Having stated the case for physics in the multi-TeV range, a case developed in detail in the reports of C.H. Llewellyn Smith, G. 't Hooft, G. Barbieri, J. Ellis and R. Peccei in the proceedings, one may now briefly turn to expected rates, signals and background in order to face questions concerning the choice of energy, luminosity, pp versus $p\bar{p}$, ... very proper to the Workshop.

The general experimental conditions will be defined by a total cross-section which one can (lacking still a precise measurement of σ_{tot} and a measurement of ρ at the $p\bar{p}$ collider) estimate to be in the 90 to 130 mb range at $\sqrt{s}$ = 20 TeV. The mean multiplicity is then likely to be of the order of 80, with large fluctuations expected. The report of B. Andersson provides a detailed consideration of these matters. Hard processes, the signal of today, will be the background of tomorrow. QCD jets at large p_T (p_T's in the 100 GeV to TeV range) should provide reference counting rates, and in much the same way as rates could be correctly predicted for the $p\bar{p}$ collider[3], reasonably safe predictions can be advanced for hadron collisions at $\sqrt{s}$ = 10 to 20 TeV. Enormous rates are expected for jets. For instance, the present collider yield of $d\sigma/dp_T dy\big|_{y=0} \approx 10^{-2}$ nb at

p_T = 100 GeV should have increased by close to four orders of magnitude at $\sqrt{s}$ = 20 TeV. One nb corresponds to 1 event/sec at L = 10^{33} and the jet yields at $\sqrt{s}$ = 20 TeV could then be probed at p_T up to 5 TeV. Rates go down as p_T^{-2} at fixed p_T^2/s and the accessible mass or p_T range does not therefore scale with $\sqrt{s}$. It follows that cross-sections will be unobservably small unless one limits oneself to values of τ ($\tau = M^2/s$ when probing for new particles, $\tau = p_T^2/s$ when measuring jet yields,...) similar to those accessible at present collider energies, much smaller if it were not for the anticipated very large gain in luminosity. It follows that the most abundant relevant partons will be gluons and that, for appreciable counting rates, the machine could be considered as being mainly a broad band gluon-gluon collider. For gluon-gluon collisions, an increase in hadron collision energy from 10 to 20 TeV corresponds to typically a factor 7 at $\sqrt{s'} \sim 1$ TeV. One thus sees how changes in energy can be traded off for changes in luminosity for very hard processes. The differential luminosity at the parton level (gg,uu,...) can be rather safely calculated. It turns out that scaling violations, important at very large p_T^2 [3], tend to wash out uncertainties about the gluon distribution at smaller $Q^2 \sim p_T^2$ where it can, in principle, be determined from the analysis of deep inelastic neutrino scattering. A wide array of predictions for rates is presented in the reports of C.H. Llewellyn Smith and A. Ali, in the proceedings.

Rates for generic hard processes are conveniently expressed in terms of the parton luminosity at the relevant value of τ, namely[3]

$$\sigma = C \frac{\tau}{s'} \frac{dL}{d\tau} ; \qquad \tau = \frac{s'}{s}$$

where C is of the order of, say, 10^{-1} to 10^{-2} (strong) or 10^{-4} (electromagnetic processes) and such distributions have been calculated. One finds that the gg differential luminosity dominates that of uu for $\sqrt{\tau} < 0.15$ and also that for $u\bar{u}$ for practically all relevant τ values. For $u\bar{u}$, $p\bar{p}$ would beat pp only for $\sqrt{\tau} > 0.5$ (assuming that $L_{pp} = 10^2 L_{p\bar{p}}$). One sees that, as previously mentioned, glue will dominate the show and that there is at present no arguable physics case for $p\bar{p}$ as opposed to pp. The smallness of the cross-sections at large s' or M^2 leads one to give a high weight to luminosity and hence strongly favours the pp option.

Next to the standards provided by jets, reasonable counting rates can be expected for hitherto unknown particles (heavy quarks, heavy scalar particles, heavy vector bosons, ...) which would couple to the gg or $q\bar{q}$ channels. Heavy quarks up to 400 GeV and heavy vector bosons up to 5 TeV could be seen. The W pair production cross-section, probably barely accessible at the Tevatron, could be studied over a wide energy range.

On the other hand, searching for the Higgs meson as it appears in the standard model looks difficult. Rates are low and background large. The reports of C.H. Llewellyn Smith and of J. Ellis discuss in detail expectations for Higgs, technicolour particles and supersymmetric particles, assessing probable signals and backgrounds. Testing SUSY appears to be relatively easy, in particular in the presently standard case where R invariance is valid and the lightest (and hence stable) supersymmetric particle is the photino. The signature is jet systems with missing transverse energy and it should be possible to overcome background problems. Production rates are expected to be reasonably large.

The reports of C.H. Llewellyn Smith, R. Peccei and H. Fritzsch in the proceedings discuss in detail the question of compositeness, and how the many excited quarks and weak bosons then anticipated could be seen. Probing efficiently at $\sqrt{s'} \approx 1$ TeV, one would be in an a priori good position to detect new effects. There is just a wide variety of so-called possible phenomena with acceptable signals over background ratios.

Concluding this overview, one may say that there is at present a theoretical consensus that the once fashionable desert will actually bloom, but there is no consensus on what flowers exist there. The successes of particle physics in the 70's and early 80's has provided answers to the old questions such as:

what is the nature of the weak force?
what is the nature of the strong force?
what is the structure of hadrons?

Satisfied with these successes, we have now to face deeper questions such as:

what is the origin of mass?
what kind of unification may exist beyond the standard model?
what is the origin of flavour?
is there a deeper reason for gauge symmetry?

We have simply too many a priori plausible hypotheses concerning the nature of symmetry breaking in the standard model. Experimentation in the TeV range at the constituent level is bound to provide most essential clues, and the present successes of the $p\bar{p}$ collider are a very strong encouragement to go to higher energies and to higher luminosities in hadron-hadron collisions.

4. THE LARGE HADRON COLLIDER

4.1. Possible Options

As already stated in the introduction a wide range of possibilities exists for a Hadron Collider in the LEP tunnel as shown in Fig. 4.1. The conceptually simplest option is a $p\bar{p}$ ring with a single beam channel which can either be built with magnets of present technology or with high-field magnets which would need a fair amount of research and development effort. The luminosity is relatively low because the antiproton sources are not very intense. In order to make provision for bunch separation at unwanted beam crossings, the aperture must be somewhat enlarged.

Using two beam channels gives a more versatile collider. The rings can have either one common magnetic circuit, which couples both rings magnetically, or two independent circuits. For space reasons, the two beam channels will always be in one cryostat. The most interesting option is the one where the two beam channels are side by side allowing for high luminosity pp collisions with many bunches. Depending on the desired field level, the two apertures may be part of a common magnetic circuit or of separate circuits.

In the first case there is enough space in the LEP tunnel to install high-field magnets. At high field level, the field must be necessarily equal and opposite in the two apertures as required for pp operation. This precludes $p\bar{p}$ with the beams in two separate channels. At considerably lower field level, the magnets can be excited such that the field is the same in both apertures and $p\bar{p}$ operation in two channels becomes possible. Of course it would be possible to put both the proton and the antiproton beams in one of the apertures, and either work with a low number of bunches at low luminosity without separation or installed separators.

In the second case (independent magnetic circuits), pp and $p\bar{p}$ operations are equally possible at nominal field, but, for space reasons, only moderate fields (~ 5 T) can be obtained.

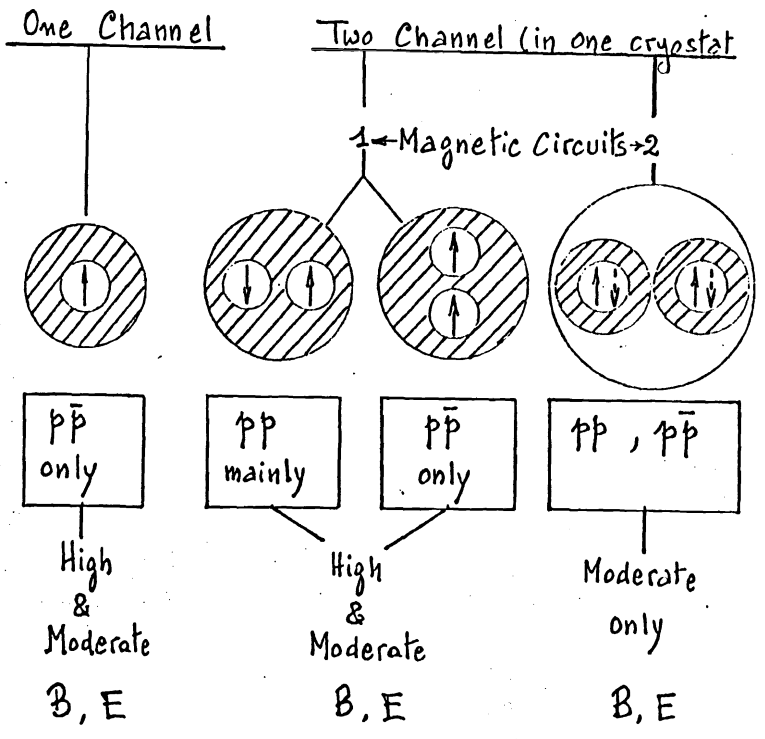

Fig 4.1 Synopsis of Hadron Collider Options for LEP Tunnel

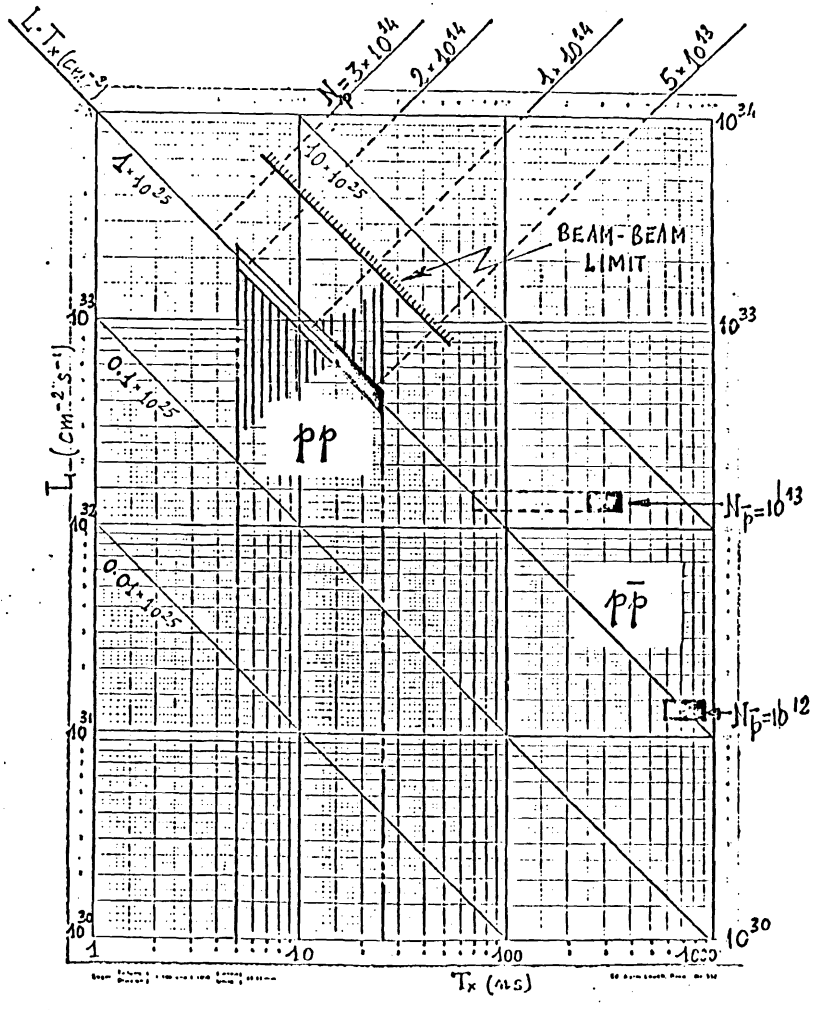

Fig. 4.2 Performance of pp and pp̄ Colliders

Having the two coupled channels on top of each other allows for a $p\bar{p}$ machine which can have as many bunches as required without being beset with the problem of bunch separation as the one channel $p\bar{p}$ option. However, since this configuration does not provide a pp option, it is not considered any further.

These arguments favour very clearly the side-by-side, two channel pp collider with one magnetic circuit; it holds the promise for top pp performance while leaving the door open for $p\bar{p}$ physics. The machine study focussed on this option because it also appears as the more demanding one from the technological point of view.

The second option which has received some attention is the one-channel, high field $p\bar{p}$ collider. These two options represent in a certain sense two extrema and, therefore, provide a good coverage of the total range of possibilities.

Before turning to the machine performance of these two options we cast first a glance at the detector performance, Fig. 4.2 shows a graph of luminosity L versus the time T_x elapsing between two bunch collisions in the detector. Also drawn are lines of constant $L.T_x$; along those lines the number of events <n> per bunch collision is constant for a given total proton-proton cross-section Σ. Since it is very difficult to handle more than one event per bunch collision, the line 1×10^{25} cm^{-2} therefore becomes an upper limit of the working region for a total cross-section of 100 mb. The maximum possible trigger-rate of the detector puts a lower limit on T_x providing a boundary on the left. One of the results of the workshop was that values for T_x as low as 25 ns are conceivable without being a too hard limit. Thus it can be seen that a luminosity of about 4.10^{32} could be obtained if the operating points of the machine were put at the top left corner of the region allowed for by the detector performance. For physics investigations which can accept a higher <n>, luminosities $< 1.5\times10^{33}$ $(cm^{-2}s^{-1})$ could possibly be reached.

From the machine point of view this high luminosity operating point is indeed feasible. The number of bunches k is between 3000 and 4000. In order to make the bunch-to-bunch distance a multiple of the RF wave-length only discrete values of k are permitted. The value of 3564 fulfils this requirement and was chosen as nominal value. The graph also indicates the total number of particles which does not appear to be excessive since it corresponds to a few SPS pulses only at the present performance level. The stored energy in the beam remains acceptable in the range under consideration; it reaches 70 MJ at $N = 5\times10^{13}$. The beam- beam effect, imposing a limit on the number of particles per bunch, is of not much concern because it cannot become very strong as long as the constraint of one event per collision is respected. The bunch intensity also seems low enough such that beam instabilities are avoided or can be dealt with by feed-back systems. Table 4.1 gives a list of important parameters.

If detectors with a higher trigger rate were developed, the operating point could move upwards along the line $L.T_x$ = const. and eventually approach $L = 10^{33}\ cm^{-2}s^{-1}$ for T_x = 10 ns. However, this implies an increase of the total number of particles N which in turn means more stored energy in the beam. The increased number of bunches makes the beam also more prone to coupled-bunch instabilities. For this reason it is preferred to keep the nominal number of bunches at 3564, in agreement with the presently estimated detector performance, and to work out a consistent set of parameters on this basis, though it is not unreasonable to expect the eventual operating point somewhere in the shaded area of Fig. 4.2.

In the $p\bar{p}$ option the luminosity is limited by the total number of antiprotons $N_{\bar{p}}$ available at each filling of the machine. This number is determined by the equilibrium between the $\bar{p}$ accumulation rate in the collector ring and the decay rate in LHC. As explained under point 4.3 we may expect $N_{\bar{p}} = 10^{12}$ with the new antiproton source under construction in CERN. This imposes an upper limit on the luminosity around $1.5\times10^{31}\ cm^{-2}s^{-1}$. In order to minimize the number of unwanted bunch crossings in the one-channel machine, this limited number of antiprotons is distributed over the minimum number of bunches compatible with the requirement of one event per bunch collision. This leads to the working point

shown in Fig. 4.2 for $N_{\bar{p}} = 10^{12}$ and, taking into account the constraints by the RF system, to 108 bunches in the machine, corresponding to a $T_x = 825$ ns.

If a ten times more powerful antiproton source became available, the luminosity could in principle be increased to a level of about 1.5×10^{32}. However, as can be inferred from Fig. 4.2, this leads either to an elaborate system for bunch separation at about 2000 unwanted crossing points, which becomes especially tricky near the interaction points, or to many events per bunch collision in the detector which is hardly acceptable. Obviously, a wide range of combinations in between these two extrema exists but all of them are beset with the problem of beam separation and multiple events per bunch collision. Thus it seems to be difficult to exploit a more powerful source for peak luminosity. It should be noted, however, that the luminosity averaged over a run can be much improved by a better source beause the machine filling can be more frequent. More details are given under point 4.3.

4.2. The pp option

4.2.1. Parameters and performance

Fig. 4.3 shows schematically the ring layout with the 8 interaction points. The two beam channels are separated horizontally by < 180 mm, the insertions are designed such that the beams cross with a small angle of 96 μrad in the interaction points. Detectors can be put over at least six intersection points. Two long straight sections are reserved for the dumping of the beam though it might be possible to put eventually both dump systems into one straight section. Fig. 4.4 gives a cross-section of the LEP tunnel with the dipole of the LHC above the LEP magnets. It is apparent that the space available for the Hadron Collider is adequate. The assumption of installing it in the LEP tunnel determines the circumference which should be equal to that of LEP, 26658 m, within a very small margin; the number and length of the straight insertions, eight insertions of about 490 m length; and the average radius of the arcs, R = 3494 m. Because of the fixed radius, the maximum energy in each beam becomes a function of the magnetic field in the dipoles and of the layout of the LHC periods. A dipole field B = 10 T is assumed.

PROTON-PROTON COLLIDER

(TWO MAGNETIC CHANNELS)

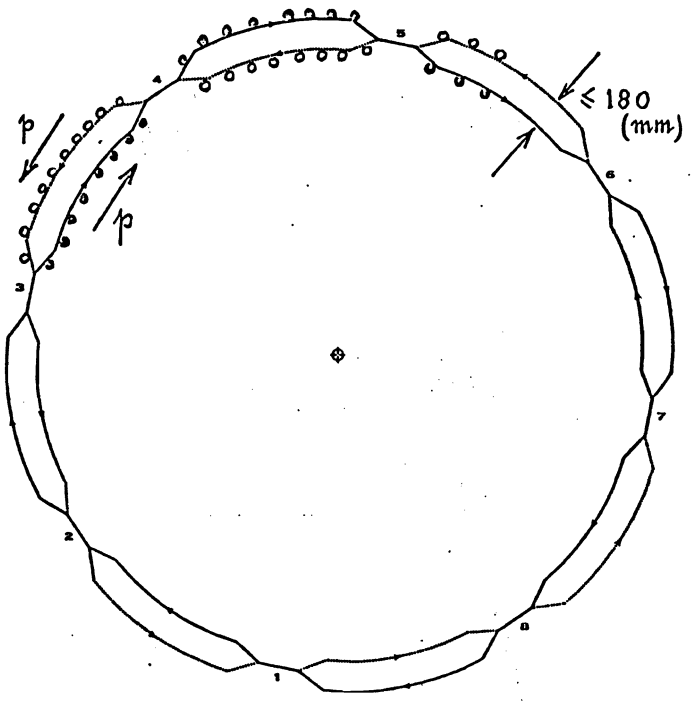

LEP TUNNEL

CIRCUMFERENCE	26659 M
ARC RADIUS	3494 M
REVOLUTION TIME	89 μS

Fig. 4.3

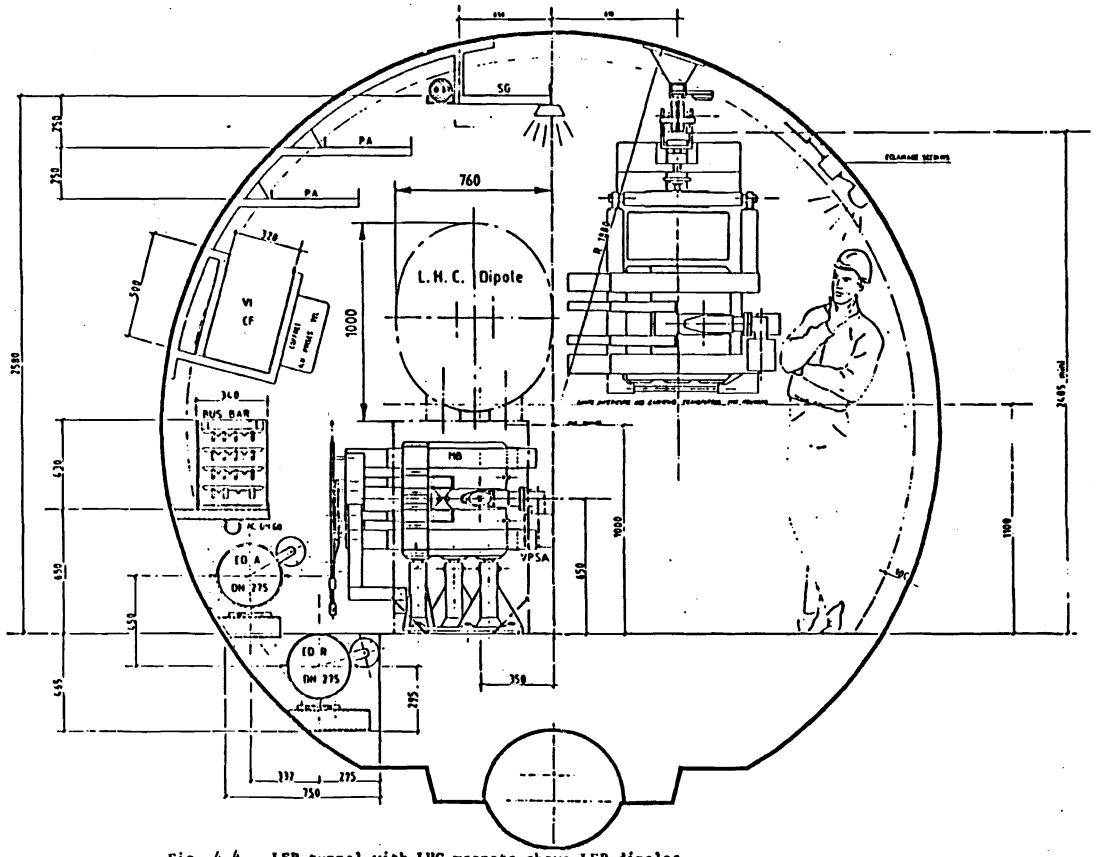

Fig. 4.4 LEP tunnel with LHC magnets above LEP dipoles

The two proton beams are assumed to be bunched. Collisions between the bunches occur only in the interaction regions. This is achieved by a small crossing angle between the two beams. Bunched beams are preferred over coasting beams because they hold the promise of a higher luminosity for a given circulating current, and also because the energy loss due to synchrotron radiation is automatically compensated by the RF system.

From the users' point of view, the most important parameters are the luminosity L, the bunch spacing T_x and the average number of events per bunch crossing <n> related by

$$\langle n \rangle = L \cdot T_x \cdot \Sigma$$

where Σ is the total proton-proton cross-section. During the workshop a consensus was reached that, in the most general case, <n> should not exceed unity. For a cross-section of 100 mb, this means that the product $L.T_x$ should not exceed a value of 10^{25} cm^{-2}. Given this constraint, the largest luminosity is obviously achieved with the smallest possible T_x which can be obtained by the machine and is still acceptable by the detector. The bunch spacing in time T_x cannot be varied continuously because it must be a multiple of the RF wave-length in the LHC and in the SPS. However, the step-size is sufficiently small (5 ns) in the range between 5 and 35 ns such that the machine can produce the smallest bunch spacing the trigger of the detector can cope with. Since it seems that the detectors can handle bunch spacings as low as 25 ns, this spacing was adopted provisionally as nominal value in order to have a basis for one consistent set of parameters. However it should be noted that each of the possible bunch spacings needs a special RF system in the PS. Thus the bunch spacing cannot be changed at a moment's notice.

It can be seen from Fig. 4.2, which gives a synopsis of all these limits based on the parameters given before, that the maximum luminosity is 4×10^{32} cm^{-2} s^{1} for T_x = 25 ns and <n> = 1. Although the machine operation would become more difficult, it is not unconceivable that the luminosity could eventually approach or even exceed 10^{33} cm^{-2} s^{-1} provided a smaller T_x or a larger <n> is acceptable for the detector. This is indicated by the shaded area around the nominal working point in Fig. 4.2.

In order to simplify the presentation, the beam emittances and the

amplitude functions β^* in the interaction points in the horizontal and vertical plane are supposed to be equal. The normalized beam emittance is assumed to be the smallest one that can be obtained from the injector chain, namely $\pi\varepsilon = 4\pi\gamma\sigma^2/\beta = 5\pi$ μm. A larger emittance would increase the required number of particles and the stored energy in the beam, which is undesirable. Not much benefit could be drawn from the concurrent reduction of the beam-beam tune shift. Even with the small emittance the tune shift is only 1.3×10^{-3} which is well below from the maximum tolerable value of 0.0025 derived from our $Sp\bar{p}S$ experience. This margin is also apparent from Fig. 4.2 where the beam-beam limit is indicated. The amplitude function β^* at the interaction points is set to 1 m. Table 4.1 gives the main performance parameters. Two sets of performance figures are given : the first set respect the $\langle n \rangle = 1$ criterion, the second set corresponds to the beam-beam limit. Each of these sets can be combined with each of the lattices given in the Table.

Table 4.1 : GENERAL PARAMETERS AND PERFORMANCE

GENERAL PARAMETERS

COLLIDER TYPE IN LEP	PROTON-PROTON	
SEPARATION BETWEEN ORBITS (mm)	165-180	
NUMBER OF BUNCHES	3564	
BUNCH SPACING (ns)	25	
NUMBER OF CROSSING POINTS	8	
BETA VALUE AT CROSSING POINT (m)	1	
NORMALIZED EMITTANCE $4\pi\gamma\sigma^2/\beta$ (μm)	5 π	
FULL BUNCH LENGTH (m)	0.31	
FULL CROSSING ANGLE (μrad)	96	
LATTICE PERIOD LENGTH (m)	79	158
LATTICE PHASE ADVANCE	π/3	π/2
DIPOLE MAGNETIC FIELD (T)	10	10
OPERATING BEAM ENERGY (TeV)	8.14	8.99

PERFORMANCE

<n> at Σ = 100 (mb)	1	4
LUMINOSITY ($cm^{-2}s^{-1}$)	4×10^{32}	1.5×10^{33}
NUMBER OF PARTICLES/BUNCH	1.35×10^{10}	2.6×10^{10}
CIRCULATING CURRENT (mA)	87	167
BEAM-BEAM TUNE SHIFT	0.0013	0.0025
BEAM STORED ENERGY (MJ)	63	121
RMS BEAM RADIUS (μm) *	12	
BEAM LIFE-TIME (H) **	40	20

* at interaction point for $\beta^* = 1$ m

** particle loss due to beam-beam collisions

The lattice consists of modules similar to the LEP lattice each having a specific function :

- In the insertions, the separation between the two rings is gradually reduced to zero. The two beams are brought into collision at the interaction points with a small crossing angle. The interaction points are surrounded by low-β insertions which minimize the beam cross section and hence maximize the luminosity. The dispersion and its derivative are made to vanish at the interaction points.
- The dispersion suppressors match the dispersion and the betatron functions between their values at the end of the insertions to the values in the regular cells of the arcs.
- The arcs contain regular lattice cells.

The lattice work was concentrated on the insertions and the arcs. The properties of the insertions are particularly relevant to the design of experiments to be installed there, and to the performance estimates. The arcs occupy most of the LHC circumference, and hence present a large fraction of the total cost. Their parameters also determine to what extent collective effects present performance limitations.

The LEP arcs and their support and supply systems are built in modules. Their lengths correspond to half a cell, i.e. 39.5 m. In the absence of any compelling reason to do otherwise, we have limited the choice of LHC cell lengths to 79 and 158 m, associated respectively with 60° and 90° betatron phase advance. Fig. 4.5 shows the layout of the magnetic elements in a cell. Since dipoles and quadrupoles are powered in series, all tune adjustments will have to be done in the insertions. The correction dipoles adjust the horizontal orbit in one ring and the vertical one in the other ring, and vice versa, because the quadrupoles focuse in opposite directions in the two rings.

Among the possible arrangements for the low-β insertions we have adopted the one in which the strong focusing quadrupole triplet is closest to the interaction point. It is followed by dipoles which complete the separation of the two counter-rotating beams. This arrangement has the advantage that the quadrupoles have the smallest possible distance from the interaction point. It therefore holds the promise of a smaller value of the amplitude funciton β^* at the crossing point, and hence of a higher liminosity for a given circulating current. The quadrupoles could be installed with an horizontal displacement so that their fields contribute to the beams separation. Fig. 4.6 shows a schematic layout and the optical functions. The quadrupole gradients are 250 T/m, the standard value in the lattice period. The value β^* can be increased by a factor 3 in order to overcome aperture restrictions and chromaticity problems during injection and energy ramping. The free space for the experiment between the quadrupoles is $\pm$ 10 m.

Two different inner diameters of the dipole coils were assumed for the study. The larger one (50 mm) allows for 40 mm inner diameter of the vacuum chamber; the smaller one (35 mm) leaves only 30 mm as inner pipe diameter, which precludes the use of the 90°, higher energy lattice as the injected beam diameter is 18 mm in this case.

The inner radius of the coil packages in the magnets also influences the field errors which are the larger the smaller the coil radius. The

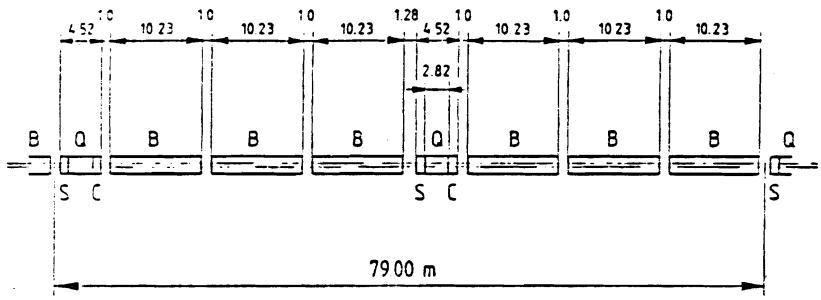

Magnet type	Approximate number
B = 2 in 1 dipoles	1600
Q = 2 in 1 quadrupoles	650
S = 2 sextupoles in the same cryostat	500
C = 1 horizontal + 1 vertical dipole corrector	500

Fig. 4.5 LHC Typical Cell (magnetic lengths)

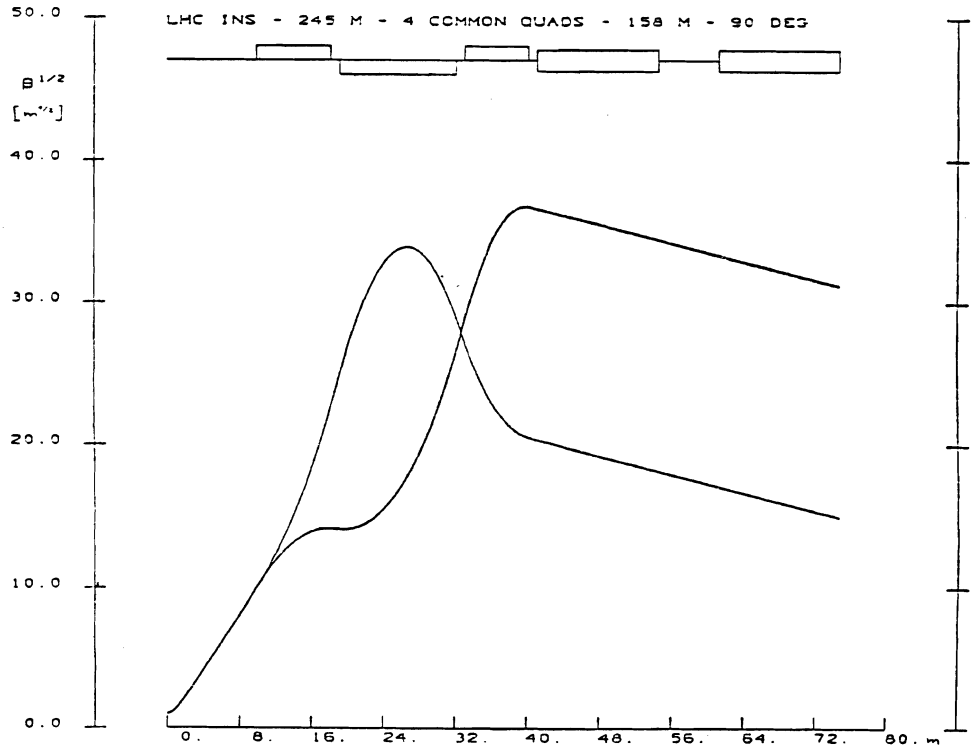

Fig. 4.6 Schematic layout of the low-β insertions

field errors arise from two main phenomena, the persistent currents whose effect is most noticeable at low magnetic fields, i.e. at injection, and the position tolerances of the superconducting wires.

The dominant effect due to the persistent currents is a large sextupole component in the field of the dipoles. In any given magnet, this component is reproducible from cycle to cycle. However, between dipoles there is a random variation. The chromaticity was compensated by appropriately exciting the sextupoles next to the quadrupoles in the LHC periods. The remaining tune variation with the momentum error is quadratic in $\Delta p/p$ and the sextupolar field error. It is shown in Fig. 4.7. The maximum stable betatron amplitude was found by computer tracking as a function of the tune, and of the systematic and random field sextupole coefficients due to the persistent currents. An example of the results is shown in Fig. 4.8. Both the tune spread and the maximum stable betatron amplitude are marginal, pointing to the need of a local compensation of the persistent currents in the dipoles.

The widths of non-linear resonance stop-bands due to the position tolerances of the superconducting wires were calculated. They are comparable to those in operating machines.

Intra-beam scattering imposes a minimum longitudinal emittance of the order of 2.5 eVs. This value is also sufficient to stabilize the beam against most of the presently known collective effects. Betatron tune spread through non-linearities and simple feedback systems can be used to suppress the remaining instabilities.

Most of the intensity dependent effects of importance in the LHC arise from the interaction of the beam with the vacuum chamber surrounding it. Therefore the relevant properties of the vacuum chamber must be carefully considered. Beam induced wall currents will heat the vacuum chamber, and together with the synchrotron radiation, contribute to the head load of the cryogenic system. Table 4.2 shows the heat losses per unit length from the two counter-rotating beams averaged over the arcs. The effect of the resistive wall has been calculated considering a

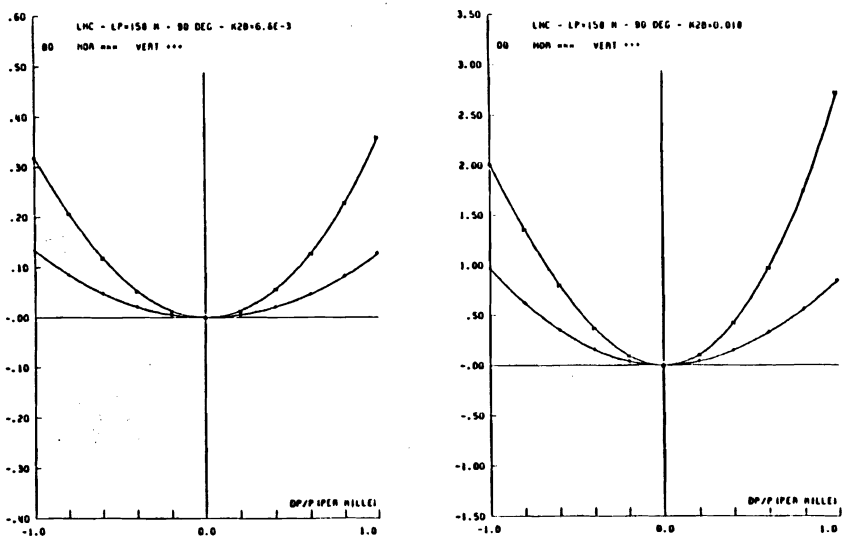

Fig. 4.7 Tune variation with momentum error

Parameter is the sextupolar field coefficient due to persistent currents.

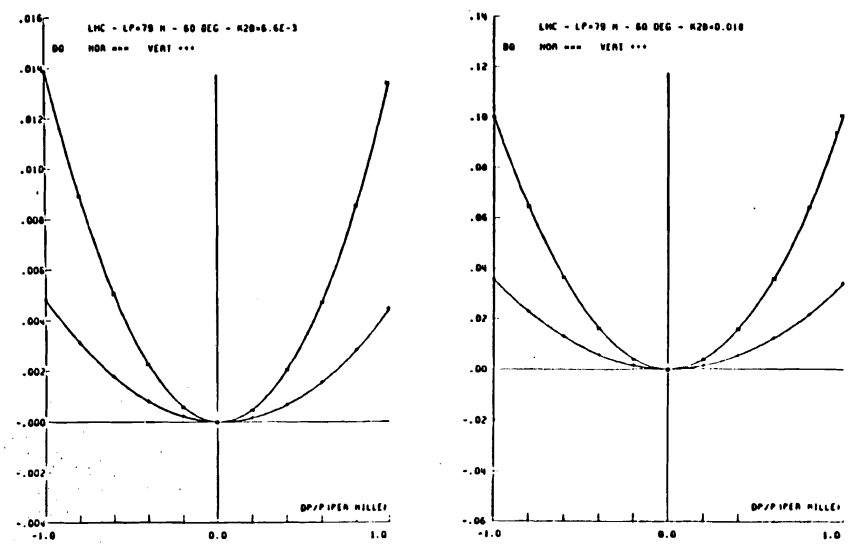

P REPRESENTS THE PROBABILITY FOR A GIVEN PARTICLE OF INITIAL AMPLITUDE X TO SURVIVE 100 TURNS WITHOUT HITTING THE VACUUM CHAMBER

a) Inner coil radius 25 mm

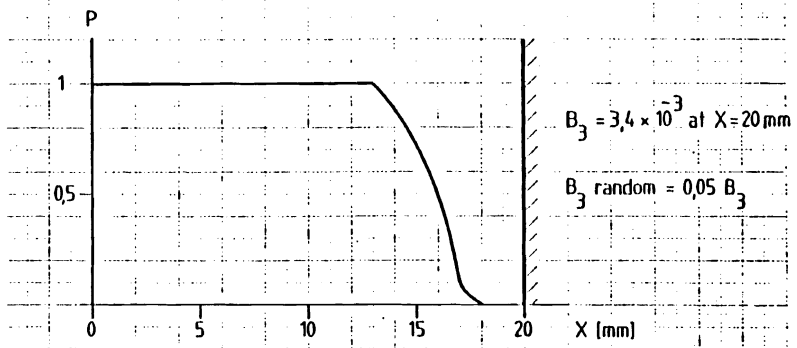

b) Inner coil radius 17.5 mm

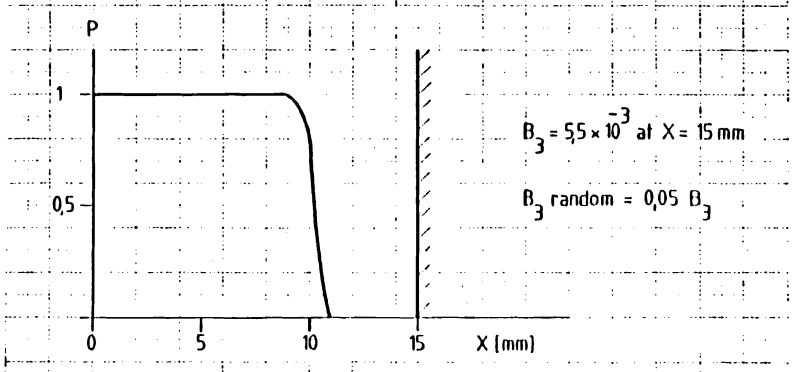

Fig. 4.8 Results of tracking studies

copper-plated vacuum chamber with a surface resistance of 10^{-3} Ω at 500 MHz.

Table 4.2

	Heat-loss Wm^{-1}
Resistive wall	.014
Broad-band	.09
Bellows	.026
Synchrotron Radiation	.24
Total	.37

All intensity dependent effects discussed above are evaluated in the most difficult case of the 79 m long cell and a vacuum chamber radius of 15 mm. For the other lattice (158 m cell length) or a larger chamber radius the beam stability is increased. The number of bunches is 3564 and the total intensity per beam considered is 9.3×10^{13} which corresponds to the highest possible beam-beam limited luminosity.

Eventually, a choice will have to be made between the two period lengths, and the two vacuum chamber diameters. The arguments entering the choice are the maximum energy, the size of the RF system, the good field region of the magnets, field errors due to persistent currents and coil position errors in the dipoles, and collective phenomena. The advantages and disadvantages of these choices are shown in Table 4.3.

The only advantage of the lattice with L_p = 158 m is its higher maximum energy. The persistent current and coil position effects are more difficult in this lattice. Whether or not they can be handled remains to be seen. If a reduction in the maximum energy by about 10% is of little concern, this lattice could be dropped.

Table 4.3 : COMPARISON OF CHOICES

Period length	79	79	158	158	m
Chamber radius	15	20	15	20	mm
Energy	8.136	8.136	8.993	8.993	GeV
RF voltage	16	16	28	28	MV
Required good field radius	10	10	14.5	14.5	mm
Persistent currents	?	OK	?	?	
Coil position	?	OK	?	?	

The persistent current and coil position effects have so far been evaluated only for an inner coil radius of 25 mm. The persistent current effects were found to be marginaly acceptable, in particular when random variations from magnet to magnet are taken into account. This effect becomes more serious when the coil radius is reduced. The width of non-linear resonances due to coil position errors was compared to that due to the beam-beam effect, and found to be much smaller than the latter for an inner coil radius of 25 mm and non-linear resonance of order 4 or higher. Even when the inner coil radius is reduced to 17.5 mm, the resonance width due to coil position errors remain smaller than those due to the beam-beam effect.

With the parameters assumed a crossing angle of 96 μrad is large enough to ensure a separation at the first near-crossing. The long range beam-beam tune shift is only a fraction of the beam-beam parameter ξ and should pose no problems. Because of the short bunch-length involved, the loss of luminosity compared to head-on collisions is only 4%. Additional synchro-betatron beam-beam resonances are excited with a crossing angle, and this is believed to have created serious problems in electron e^+e^- machines. However, since in the LHC the beam-beam tune spread and the synchrotron tune are also very small, it should be possible to avoid synchro-betatron resonances up to very high order.

4.2.2. Magnets, cryogenics and other main machine systems

Rather thorough feasibility studies were made for all main machine systems, namely :

1. Superconducting magnets

"Two-in-one" magnets can be built with field up to 10 T, provided a vigourous R & D programme on the superconducting wire and on winding techniques is carried out successfully. An example of a possible dipole design is given in Fig. 4.11.

2. Cryogenics

The production, transport and distribution of the cryogenic fluids (He and N), are compatible with the space in the LEP tunnel. One refrigerator per octant should be installed in the interaction regions.

3. Vacuum

Profiting from the magnet cryostats, cold bore will be used, which intrinsically provides a very low pressure.

4. Radio-frequency

Only 30 m of active cavity structure are in total needed for both rings. To allow a large number of bunches in the Hadron Collider, the frequency should be ~ 400 MHz, namely the double of the SPS frequency.

5. Injection, beam transfers and dumps

At least two alternative layouts of transfer tunnels are

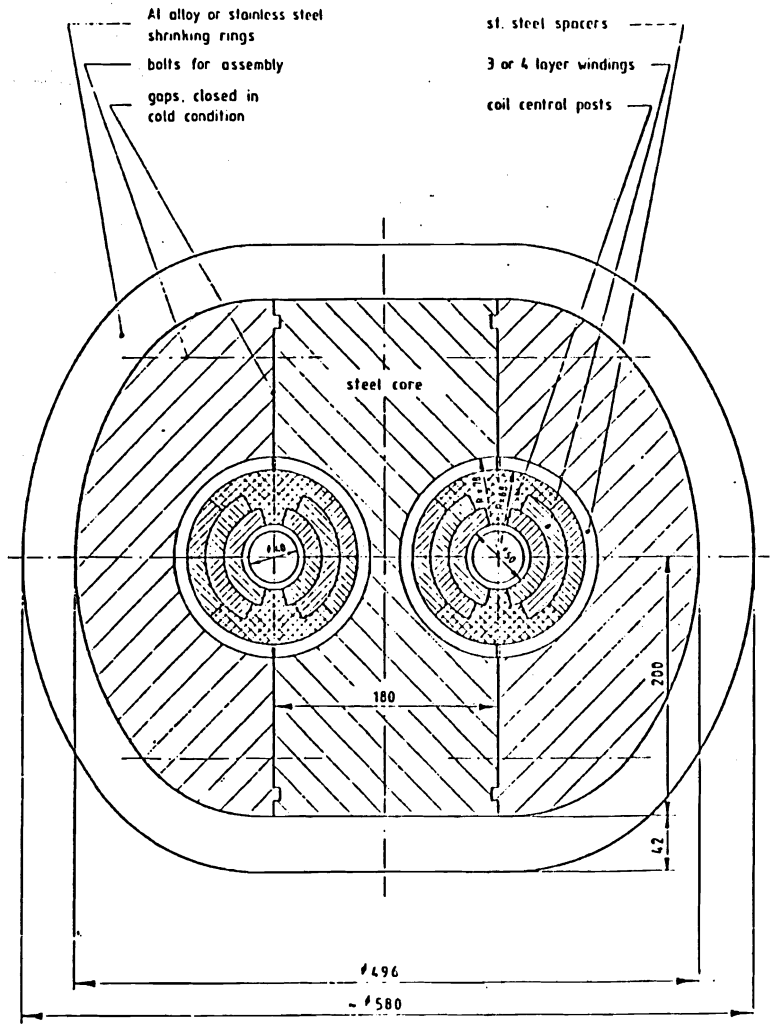

Fig. 4.11 Twin bore (2 in 1) dipole magnet, cross-section type B

B_0 = 10 T
J_{av} = 300 A mm^{-2}

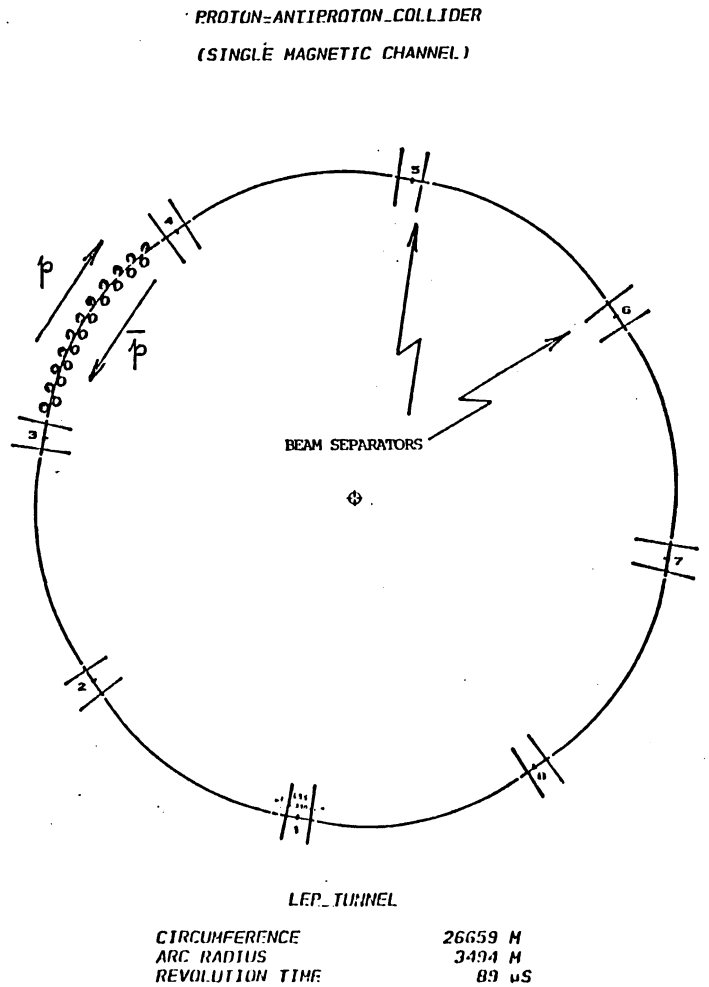

Fig. 4.28

possible between SPS and LEP. Beam dumps are feasible with present technology.

6. Radiation protection

No problems for the environment.

Beam losses must be controlled very well to avoid quenches of the superconducting magnets.

A full account of all these studies and of the conceptual design of components will be given in the proceedings of the Workshop, together with a complete parameter list.

4.3. The $p\bar{p}$ Option

Only a one-channel machine is considered as stated in the introduction. The layout of this single ring is shown schematically in Fig. 4.28. In order to make the bunches collide only in the eight interaction points, the orbits of protons and antiprotons outside the collision regions are kept apart by electrostatic separators which are positioned downstream and upstream of each interaction point.

The transfer of antiprotons into one of the two LHC rings in transfer Variant 1 (Fig. 4.22) necessitates their clockwise rotation in the SPS. This requires polarity reversal of the SPS and injection in the clockwise direction in LSS1. For the latter a new beam line linking the PS/SPS antiproton transfer line TT70 with TT10 must be built. TT10 and the injection system in LSS1 as well as the extraction in LSS4 and one of the two SPS/LHC transfer lines and the LHC injection system must also be able to operate at reversed polarity.

In transfer Variant 2 (Fig. 4.23) the transfer of antiprotons is easier, since for filling e.g. ring 2 of the LHC, they can circulate in the SPS in the normal anticlockwise direction. The only new feature is

that the extraction in LSS1, the transfer line to the LHC and the injection must have the possibility for polarity reversal.

Since there is only one channel in the ring, the magnets are simpler than for the pp collider, but the aperture possibly larger to accomodate the separation of the orbits. The stored energy in the beam is lower, and the beam is likely to be more stable because the number of bunches is reduced by more than an order of magnitude compared to the pp option. Unfortunately, these advantages have to be paid for by a lower luminosity and by the necessity of having separators and consequently larger magnet aperture. The separators deflect the beams in opposite directions electrostatically; their length is about 40 m per station. The operation of $p\bar{p}$ rings is more complicated and the intensity of the $\bar{p}$ beam limited by the accumulation rate, obviously with adverse effects on the luminosity especially when averaged over time.

As explained before, the peak luminosity is limited by the total number of antiprotons available at the beginning of a run. With the new CERN antiproton source about 10^{12} particles can be expected resulting in a luminosity around 10^{31} cm^{-2} s^{-1} (see Fig. 4.2). Respecting $\langle n \rangle \leq 1$ and selecting a bunch spacing compatible with the RF yields 108 bunches as nominal number corresponding to T_x = 825 ns. The separators are installed behind the low-β quadrupoles but before the first unwanted crossing occuring at 124 m from the interaction point. The most promising scheme of beam separation makes the orbits spiral around each other by means of a set of vertically deflecting plates and a set of horizontally deflecting plates. Hence, the bunches always circulate off-centre in the arc, which might adversely influence their stability.

If the number of available antiprotons could be increased, say, to 10^{13} a higher luminosity could in principle be reached. If the number of bunches were not changed the number of events per bunch collision would become inadmissibly high as can be seen on Fig. 4.2 . Increasing the number of bunches k would help in this respect but quickly trouble arises if k approaches 300, corresponding to T_x = 300 ns. At this point the unwanted crossing has approached the low-β quadrupoles leaving no space

for the long separators. Another serious problem arises during injection. The separation is not sufficient to prevent deflection of the already stored beam by the kicker magnet when the second beam is injected. Thus the injection kicker must be positioned between two unwanted crossings and its field must rise and fall within T_x. This is already difficult for 108 bunches but becomes nearly impossible once k reaches 200 to 300, at least with present technology. The possibility remains to separate the orbits by such an amount that the beam is not disturbed by the kicker field acting on the other beam. Such a scheme has not yet been worked out.

In order to assess the required accumulation rate A in the antiproton source, the duration of a typical run has to be known. Taking as a guide the decay-rate $1/\tau_b$ of one beam due to beam-beam collisions this necessary $\bar{p}$ acculation rate becomes

$$A \gtrsim N_{\bar{p}} / \tau_b \quad .$$

For our parameters $\tau_b \sim 20$ h yielding for $N_{\bar{p}} = 10^{12}$ $A \gtrsim 5\times10^{10}\ h^{-1}$ and for $N_{\bar{p}} = 10^{13}$ $A \gtrsim 5\times10^{11}\ h^{-1}$. The rate $5\times10^{10}\ h^{-1}$ is the design aim of the new CERN antiproton source and the FNAL source under construction, while $5\times10^{11}\ h^{-1}$ could possibly be reached with a sophisticated multi-ring source ($p\bar{p}$ version of SSC - Chicago, Feb.'84).

It is apparent that even with a very advance $\bar{p}$ source the maximum expected peak $p\bar{p}$ luminosity is inferior to the peak pp luminosity by about one order of magnitude. The machine becomes technically rather difficult for luminosities approaching $10^{32}\ cm^{-2}\ s^{-1}$. Moreover, the ratio of average to peak luminosity will certainly suffer from the operational complications and will be lower than for the pp, which will profit from the powerful proton sources at hand.

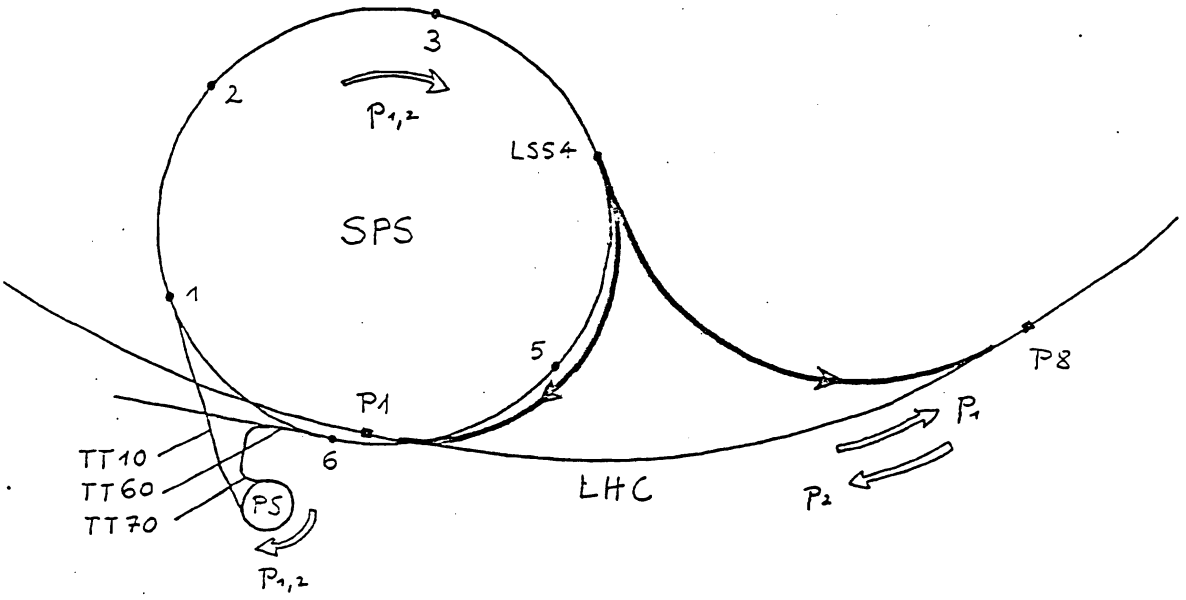

Fig. 4.22 Beam transfer through the injector chain; variant 1

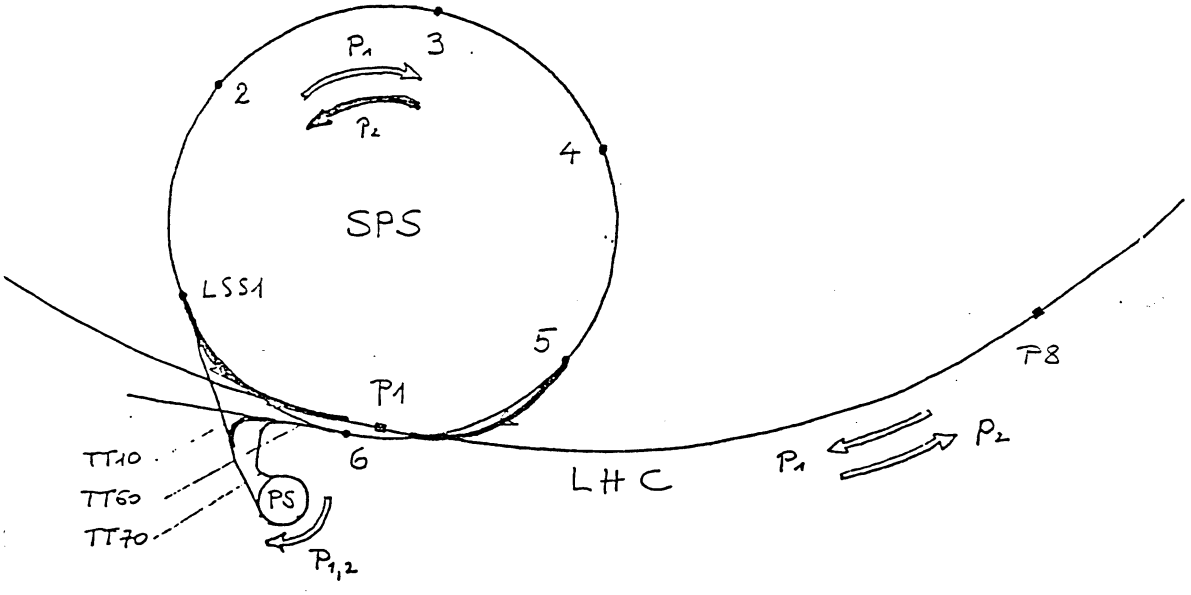

Fig. 4.23 Beam Transfer through the injector chain; variant 2

4.4. Final remarks and conclusions

In this report we have considered mainly a proton-proton collider, as the most promising tool for extending the present energy range at constituent level into the TeV region.

The basic machine structure can of course be used for other possibilities, for instance for collisions of the electrons of LEP with the protons of the hadron collider, up to a centre-of-mass energy of about 2 TeV.

Collisions of ions would also be possible, with beam energy per nucleon of about one half of the proton energy.

It should be pointed out that no work has been done on these other possibilities.

The conclusions which can be drawn from the study are :

i) A proton-proton collider can be installed in the tunnel above LEP. A center-of-mass energy of about 18 TeV could be reached with superconducting magnets of 10 T.

ii) In order to achieve this goal, it is necessary to launch in Europe a vigourous programme of development of materials and techniques necessary for the construction of such magnets.
Several European Laboratories and Institutions express a great interest to participate in such a programme.

iii) All other machine components and systems appear to be feasible with the present technology.

ACKNOWLEDGEMENTS

This report was written by the following conveners of the machine groups for the CERN-ECFA Workshop on the Feasibility of Hadron Colliders in the LEP Tunnel (March 1984), with the help of other collaborators, whose names will be recorded in the full Proceedings together with references to more detailed work :

Possible Machine Options	: O. Barbalat, G. Brianti, K. Hübner, K. Johnsen
Parameters and Performance	: J. Gareyte, E. Keil
Injection and Beam Dump	: K. Hübner, E. Weisse
Magnets	: R. Billinge, R. Perin
Cryogenics	: M. Morpurgo, J. Schmid
Vacuum	: C. Benvenuti, H.P. Reinhard
Radio-Frequency	: D. Boussard, W. Schnell
Radiations	: K. Goebel, G. Stevenson

5. EXPERIMENTATION AT A MULTI-TeV HADRON COLLIDER

An investigation of the feasibility of a hadron collider in the LEP tunnel is not complete without examination of the technical problems which will confront the physicists in the design, construction, and operation of the experiments, and analysis of the data. This was the principle objective of the special study-groups set up early this year and which met together over the four days of workshop at Lausanne.

The general character of the processes occurring in hadron collisions in this new energy range can be estimated, within limits, by extrapolation from present energies; the success of QCD enables predictions to be made of the form and frequency of 'hard' collisions; and current theoretical speculations going beyond the 'standard model' are a fertile source of new phenomena to be looked for, not to mention the tantalizing hints of new physics suggested by recent CERN $p\bar{p}$ collider results.[2] Then, from the machine side enter a number of practical considerations. The fixed radius means that magnetic field determines the maximum energy which can be reached: 5 TeV per beam could be obtained with magnets using already proven technology, whereas about 9 TeV/beam requires the development of magnets capable of operating at fields of 10 Tesla. A luminosity of $\sim 10^{33} cm^{-2} s^{-1}$ seems achievable with a pp collider, using '2 in 1' magnets but a cheaper, single channel, $\bar{p}p$ collider would have a luminosity a hundred times smaller unless a completely new $\bar{p}$ source is constructed, and then the upper limit on luminosity is still about ten times less. Moreover, to reach luminosities $\sim 10^{33} cm^{-2} s^{-1}$ the experiments must cope either with many interactions for each bunch crossing or, if this number is to average no more than one, they must

accomodate to intervals between bunch crossings as short as 25ns, or even 12.5ns.

Thus, as previously mentioned, further consideration of a hadron collider requires a response from experimentalists to the following questions: do we want the highest possible energy? Can experiments be performed with a luminosity $\sim 10^{33} cm^{-2} s^{-1}$, with multiple interactions per bunch crossing <u>or</u> with an interval between crossings as short as 25ns, or even 12.5ns?

With such questions in mind the study-groups were formed to examine technical rather than physics topics. This is not necessarily the way one would approach the design of an experiment, where certain physics aims would be uppermost and compromise between different technical requirements might be required to achieve a practicable solution; but this approach would clearly be premature now. Instead, the aim was to concentrate on optimising the design of an apparatus for one particular task, be it identification of jets, or of muons, for example. In this way both the limitations imposed by the machine and the needs for further development of detector technology might be best exposed.

The result is a first look at a number of very important problems facing the experimenters who will engage in such investigations and, especially remembering the little time available to the study-groups, a very valuable guide for further considerations of both the machine itself and the detector technologies.

In this brief document justice cannot be done to the work of the study-groups, their complete reports will appear in the Workshop Proceedings. The following sections contain short summaries by the convenors of the conclusions reached in each group.

5.1 Jets at the LHC - by P. Jenni (CERN).

The LHC with colliding proton or antiproton beams of up to 10 TeV will provide collisions among gluons and quarks at very high c.m. energies. These parton interactions will result in final states with large transverse momentum gluons and quarks or in the production of (new) massive states whose decays involve leptons, bosons, quarks and gluons. The quarks and gluons are not directly observable but manifest themselves through their fragmentation into jets of hadrons. Missing jets, or more generally missing transverse momentum, will single out events with "unseen" particles like neutrinos, photinos etc..

QCD predicts very large rates of high p_T jets at LHC energies, mainly from gluon-gluon scattering. For example the jet yield at p_T=0.5 TeV, y=0 is predicted to be 1 jet/second/100 GeV/unit rapidity at a luminosity of $10^{33}cm^{-2}s^{-1}$.

In this study an investigation was made of the extent to which jets can be treated as "particles" and what limits the measurement of their 4-vectors. The following questions were asked: what is a jet, what limits the resolution of jet measurements, how well can one measure missing energy, and finally can one operate a jet detector (calorimeter) at the limits of the foreseen LHC machine performance?

What is a jet?

High p_T jets will be clearly seen, however predictions for the jet fragmentation are model dependent. Different models (parton showers with strings, clusters, independent fragmentation...)

fitting the presently available data differ by a factor of about 2 when extrapolated to the TeV jet region. For example the total particle multiplicity will be very high, of the order of 100. About half of the jet energy is carried by the particles with fractional jet energy smaller than 0.04. Only about half of the particle flow is contained in a cone with half-opening angle $\theta=30°$. However the average energy flow is much more colimated; 50% of the jet energy is within $\theta=5°$. Still, a large cone ($\theta>60°$) is needed for precise energy measurements. Many jets will have substructure due to the hard gluon bremstrahlung.

Jet-jet mass resolution.

The jet-jet mass resolution has been studied in an ideal detector with an acceptance of ±5 units in rapidity and with the jet axes contained in the central region between 50 and 130 degrees. The intrinsic mass resolution from fragmentation effects alone is 1% for jet-jet masses of 1 TeV and 0.5% for jet-jet masses of 4 TeV. The resolution remains about the same when cells with dimensions $\Delta\phi*\Delta\eta=5°*0.05$ having an energy resolution $\sigma(em)=0.08\sqrt{E}$ and $\sigma(had)=0.35\sqrt{E}$ are introduced in the analysis. The resolution is worse by about a factor of 3 when a clustering algorithm is used (with a cut on the transverse cluster energy of 10 GeV). The resolution is further degraded if the interaction vertex is not known (adds about 2% in quadrature).

In the LHC the probability of overlaps with minimum-bias events in the same bunch crossing can be high. The influence of this effect has been simulated. Up to 10 minimum-bias events were added to the trigger event. These additional events spoil the resolution on the cell level, but only a negligible deterioration of the

resolution is observed at the cluster level. Also variation of the cell size has little influence on the jet-jet mass resolution.

Missing energy.

The missing energy signature will be the only way to detect the non-interacting particles (neutrinos, photinos etc..). Good angular coverage is needed for the transverse momentum balance. This will also provide a modest longitudinal energy balance which would resolve kinematic ambiguities.

As an example the detection of high p_T gluinos decaying into a quark-antiquark pair and a photino has been studied. With a jet trigger of p_T = 1 TeV one observes that the missing p_T parallel to the trigger-jet axis will give a signature above the QCD background. The heavy quark decays from QCD jets are a considerable source of background for missing p_T. Therefore the detection of high p_T leptons (muons) will be important in order to reject this background.

There are no very strong arguments either in favour or against the presence of a standard magnetic field for the jet analysis.

Conclusions.

Good jet calorimetry (for example U with liquid argon or Si read-out) seems possible at the LHC given a reasonable progress in electronics. Jet physics will profit from the high luminosity (10^{33} $cm^{-2}s^{-1}$) at LHC with preferentially short bunch spacing (down to 10 ns) with one interaction per crossing on average. In order to reach the jet resolution limitations imposed by the physics (fragmentation) a systematic study of jet calorimetry (calculations

and test experiments) should start to meet the LHC physics challenge.

5.2 Electron and Photon Identification - by Ph. Bloch (Saclay)

The observation of charm and beauty particles through their semi-leptonic decay as well as the recent discovery of the W^{+-} and Z° at the CERN SPS Collider have strongly demonstrated the power of the lepton physic when searching for new objects.

At the LHC, it will be possible to detect very heavy flavours and/or new sources of Z°s and W's such as the Higgs particle. If the Higgs boson is heavier than $2M(Z^\circ)$, and if the t quark is not too heavy ($Mt \ll M(W)$), it will decay predominantly as follows:

$$H \longrightarrow W^+W^- \quad BR \sim 2/3$$

$$H \longrightarrow Z^\circ\, Z^\circ \quad BR \sim 1/3$$

The production cross section of a Higgs particle of mass 400 GeV via WW fusion is estimated to be of the order of 1 pb at $\sqrt{s}$ = 20 TeV, yielding 2000 events $H \longrightarrow WW$ with one W decaying semi-leptonicaly, and 400 events $H \longrightarrow Z^\circ Z^\circ$ with one $Z^\circ \longrightarrow e^+e^-$ for a 150 days run ($\int L\, dt = 10^{40}\ cm^{-2}$).

However, because of the large background due to the continuum of W^+W^- (or $Z^\circ Z^\circ$) production, and to 4 quarks interactions (qqqq $\longrightarrow$ 2 jets + Z°), very good energy resolution in the electron channel will be essential to observe any signal.

Photons will also be useful to detect new phenomena. Let us mention for example:

- The detection of excited quarks:

q* ---> q gamma

- The observation of pairs of gauge bosons (Z° + gamma, W + gamma) which is expected to be largely enhanced in some composite models.

Calorimetry

At high energies, electrons (and photons) can only be detected via calormetric methods. Let us review briefly the various requirements for an electromagnetic calorimeter at the LHC collider.

1) Energy Resolution

This appears not to be a problem at high energy, where most of the 'today's' calorimeters ($\sigma(E)/E < .15/\sqrt{E}$) will give a measurement at the percent level, already dominated by systematic effects such as calibration.

2) Rapidity Coverage

Interesting processes involving high mass objects will produce central electrons: in the case of a 400 Gev/c Higgs boson, 60% of the decay electrons from W's or Z°'s are in the rapidity interval [-2,+2].

Taking into account the difficulty to detect electrons in the forward region where jets are very collimated, we think that a coverage of +-2 units of rapidity would be satisfactory.

The main background to electron identification is due to jets which fragment into a single charged π and one or more π°s which overlap. To fight against this background, it is necessary:

a) To measure accurately the shower position in the calorimeter and compare it to the extrapolated impact of the charged track measured in a tracking device in front of the calorimeter; an accurate measurement of the shower position requires a granularity of the order of the radiation length, ie $g \simeq X_o$.

b) To have a fine granularity, if possible of the order of the minimal angle θ_{12} between 2 particles in a jet. At the considered energy, θ_{12} is about 10mrad.

Conditions a) and b) would be fullfilled by a dense calorimeter ($X_o \simeq 1$ cm) with a 1 meter radius.

4) Gamma/π^o Rejection

With the previous parameters, one may expect a "shower separation" for a distance $\geq$ 1 cm, i.e. to disentangle gamma from π^o for momentum less than 30 GeV in a calorimeter of 1m radius. At higher momenta, a statistical method based on the conversion probability in the first radiation lengths has to be used.

5) Pile-up, Timing

The probability that the next event deposits a large (> 15 GeV) energy in the vicinity of the electron or the jets of an interesting trigger event is still less than 1% at a luminosity $L \sim 10^{33} cm^{-2} s^{-1}$, we therefore conclude that:

a) we can pile up several events in the calorimeter;

b) we prefer the "many bunches" solution with less than 1 collision per bunch crossing to the other solution (i.e. less bunches with several events at the same crossing);

c) the integration time of the calorimeter may be larger than the time between two crossings (typically 25 ns).

It is however necessary to have a precise timing ($\tau < 20$ ns) for each calorimeter cell to disentangle the various events which pile up in the calorimeter.

More precise requirements on the calorimeter electronics will be reported in the proceedings of the workshop.

Additional Rejection

The calorimeter described in the preceeding section should give a rejection power against jets of a few 10^5 for isolated electrons. If one wants to detect electrons close to the jets, the rejection power is much smaller (for example the background due to the misidentification power of high energy charged hadrons in the jet becomes important) and one needs additional devices.

The most interesting possibility is offered by Transition Radiation Detectors (XTR). A 50 cm thick lithium radiator read out by 4 Xenon chambers will provide a rejection of 80 to 300 against charged pions in the 10 to 100 gev/c range. For non isolated tracks, the rejection will be worse, but an additional rejection factor $\gtrsim 10$ is certainly easy to obtain.

An attractive possibility would be offered by a XTR

detector associated with low pressure chambers as developed recently by Breskin, Charpak and Majewski, those chambers being insensitive to minimum ionizing particles.

Do We Need A Magnetic Field?

The question of the magnetic field was much debated in our working group, but no clear conclusion has emerged. Let us only list the arguments in favour or against the presence of the magnetic field:

For:

a) The charge measurement (up to 500 GeV/c, as described in the report of the tracking chamber working group) is useful for many physics topics, for example the observation of heavy flavour mixing or the detection of forward/backward asymmetries in the production of new W's. It is however important to recall that new W's will give small asymmetries in the central region, especially in pp interactions, unless they are very massive. Note also that $b\bar{b}$ mixing (and maybe $t\bar{t}$ mixing) will be difficult to observe because the associated electrons will be very close (if not inside) the jets. Probably such physics topics are reserved to muon detectors.

b) Background rejection

As mentioned before, most of the jet background in electron identification is due to the overlap of a highly energetic π^0 and a slow charged particle. The comparison of

the momentum measured in the field and the energy measured in the calorimeter will help to reduce this source of background. Simulations show that a factor $\sim$10 may be gained if particles of momentum < 20 geV/c could be measured in the mag field. This additional rejection is mandatory to detect electrons close to jets. Note that the trajectory of a 20 GeV/c particle has a 500 microns sagitta in a low field (B=0.3 T) and modest radius (R=1 m) detector. This low field could be obtained with a thin coil.

Against

a) A big radius central detector implies an increase of cost and complexity of the calorimeter and XTR detectors.

b) The background due to conversions of π° and Dalitz decays is more difficult to fight. If there is no magnetic field, DE/DX detectors and XTR detectors will give a signature for 2 minimum ionizing particles. If there is a magnetic field, one needs to find the second branch of the asymmetric conversions or Dalitz decays: this implies a very efficient tracking detector.

c) Finally, let us mention that the electromagnetic calorimeter must be inside the magnetic coil. If not, the gamma/π° separation and the shower localisatoin will be degraded.

Conclusions

Electron and photon detection is essential for detecting new phenomena. The good energy resolution possible for the electromagnetic calorimeter will help to disentangle the signals from backgrounds.

A fine grain calorimeter is necessary to detect electrons near jets. The high luminosity of the LHC (10^{33} $cm^{-2}s^{-1}$) can be used (even if the calorimeter pulse is not very short) preferentially with a small bunch spacing and one interaction per crossing.

Transition Radiation Detectors will be very useful for electron identification, especially if they could be read out by low pressure chambers.

5.3 Muon Identification - by W. Bartel (DESY)

At a TeV collider muons may be detected and their momenta measured over essentially the complete momentum range from a few GeV/c up to momenta in excess of 2 TeV/c. This feature makes them the ideal tool to study weak decays of heavy flavours and heavy gauge bosons of known and of yet undiscovered species. Multi-lepton events may be analysed in terms of cascade decays of weakly decaying objects and like sign μ's in one jet will allow a study of flavour mixing. The detection of μ's is essential for any experiment relying on a calorimetric energy measurement, because unrecognized μ's introduce a bias into the energy determination. In the search for SUSY partners of ordinary particles, events with largely unbalanced transverse momenta are interpreted as being due to the emission of an energetic photino, which is expected to have a negligibly small interaction cross section with matter. The presence of a photino, however, should not be accompanied by the emission of a lepton, as in the neutrino case. Thus an effecient lepton veto is required to reduce the weak interaction background to the photino signal. The μ-group thus arrived at the conclusion that

Detectors may employ a combined function μ sectrometer, in which magnetized iron serves as a hadron absorber and at the same time provides a magnetic field for momentum analysis. The functions of hadron absorption and momentum measurement may, however, be separated and momenta may be determined in a magnetic field before or after the absorber.

A 2m diameter solenoidal field equipped with a precise tracking chamber appears not to be adequate to provide the required momentum resolution unless extraordinarily high magnetic fields of 10 Tesla are applied.

If a dense calorimeter is used as a first stage hadron absorber the μ momentum may be determined in a magnetic field outside the calorimeter using a set of precise tracking chambers. Such an arrangement is proposed for LEP by the L3 collaboration. The momentum resolution the group is aiming for would be sufficient to meet the physics requirements. It may be necessary, however, to increase the absorber thickness in order to reduce the punch through probability.

A 4π iron spectrometer could be implemented by arranging 5m of saturated iron around a 2m diameter tracking chamber followed by an electromagnetic shower counter. A hadron calorimeter employing magnetized iron may constitute the first part of the μ spectrometer. μ trajetories are sampled every meter and a coincidence between two layers of scintillation counters after 2m and 5m of steel will form a fast μ trigger signal. Using hard-wired track-finding logic a trigger signal with variable momentum cut off could be provided. At a cut-off momentum of 10 GeV/c such a trigger would run at a rate of 20 Hz

due to prompt μ's from heavy flavour decay for a luminosity of L = $10^{32} cm^{-2} sec^{-1}$. The background due to π and K decays would be negligibly small.

Conclusions:

The muon group came to the conclusion that a μ-identification system is vital for any detector.

A 4π μ spectrometer with a momentum resolution sufficient to determine the charge up to 2 TeV/c can be built with today's technology.

A machine with 25 ns bunch crossing rate and one interaction per crossing is preferable to one with a lower repetition rate and multiple interactions per crossing.

The muon detection system could be improved if cheap, robust and precise large area detectors were developed.

5.4 Tracking Detectors for a Large hadron Collider

- by A. Wagner (Heidleberg).

Although in the high energy domain under consideration ($\sqrt{s}$ = 10-20 TeV) calorimeters will become the main tool in the analysis of the predominantly jet-like events a number of reasons demand tracking of individual particles: i) vertex determination (identification of events with more than one interaction per bunch crossing, measurement of the exact vertex position in order to improve the jet-jet invariant mass resolution, search for secondary vertices); ii) pattern recognition (correlation of calorimeter

information with the vertex, event reconstruction); iii) momentum measurement (determination of momentum and charge of particles, reduction of track overlap in the calorimeters due to fall-out of tracks); iv) electron identification (track vector and impact point measurement in front of the calorimeter to eliminate background from photons, $\pi^{\pm}/\pi^{\circ}$ overlap, matching of momentum and electromagnetic shower energy, charge measurement); v) muon identification (track vector before the iron absorber, momentum matching); vi) redundancy (cross check of calorimeter information, background rejection in rare events); vii) imaging of rare events.

The resulting requirements on the performance of a track detector are: The measurement of space points with high accuracy near the vertex ($\sigma_{R\phi} \sim 25\mu$, $\sigma_z \sim 1$mm), a very efficient pattern recognition through measurement of many space points per track and a two track resolution of a few mm, and a magnetic field of 5-10 KGau.

Two machine operation conditions were considered: i) The high luminosity option: $L = 6.10^{32}cm^{-2}s^{-1}$, $t_x = 165$ns between bunch crossings and $\langle N_x \rangle = 10$ events per bunch crossing. It was found that the particle flux in this operation mode would still allow tracking in a rapidity region of $|y| < 1.5$, but the efficiency to find all vertices would be low and therefore the event interpretation questionable. For these reasons this operation mode was rejected. ii) High repetition rate option: $L = 3.10^{32}cm^{-2}s^{-1}$, $t_x = 25$ns, $\langle N_x \rangle = 1$. Here the main question is if the high repetition rate could be handled by tracking chambers.

In the discussion of the techniques for tracking detectors the main emphasis was put on a feasibility study of known techniques such as driftchambers. The working group on vertex detectors

focussed mainly on the study of the solid state detector techniques.

In the high repetition mode operation of the machine the total rate of charged particles into the rapidity interval of $|\eta| < 1.5$ can be as high as 660 MHz. The build up of space charge and a lifetime limit of the sensewires in the driftchambers require small drift cells: The longest drift length at 30cm distance from the beam should not exceed 10mm. (In this case the change of the drift field due to space charge would be <10% for a gas gain of 10^4). Due to the short time between bunches (25ns) one should go to gases with fast drift velocities (e.g. A-CF_4: 120μm/ns) and one must allow for the pile-up of $\sim$ 3 events during the memory time of the chamber. The in-time tracks have then to be identified by an appropriate drift cell design (Fig. 1a,b). In the staggered cell design (Fig. 1a) out-of-time tracks are identified by a mismatch of $2*25ns*v_{Drift} \simeq 6mm$ of two track elements at the boundary of two cells, while in the rotated cell design (Fig. 1b) the corresponding mismatch occurs at the points where the tracks cross the anode or cathode planes. In both designs the left/right ambiguity is automatically resolved and close tracks can be identified down to distances of $\sim$1mm. A space resolution of $\sigma_{R\phi}$ = 200μm-300μm can be achieved.

The requirement to measure true space points can be met by using charge division for the read out of the third (Z-) coordinate. The resolution which can be obtained however is only in the order of 1% of the wire length. A few additional precision measurements of Z per track are therefore needed. They could be made either in special drift cells rotated by a stereo angle of a few degrees with respect to the chamber axis, or by pad readout on selected layers of the drift chamber. Both methods would yield a resolution σ_Z of <

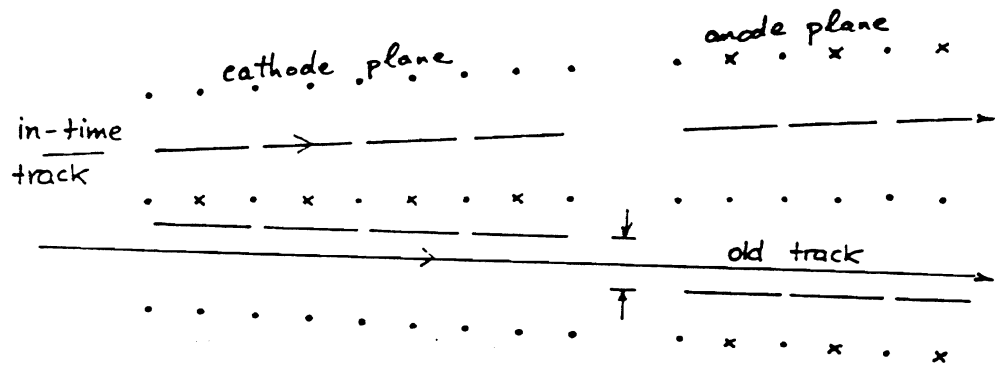

Fig. 1a. Staggered cells

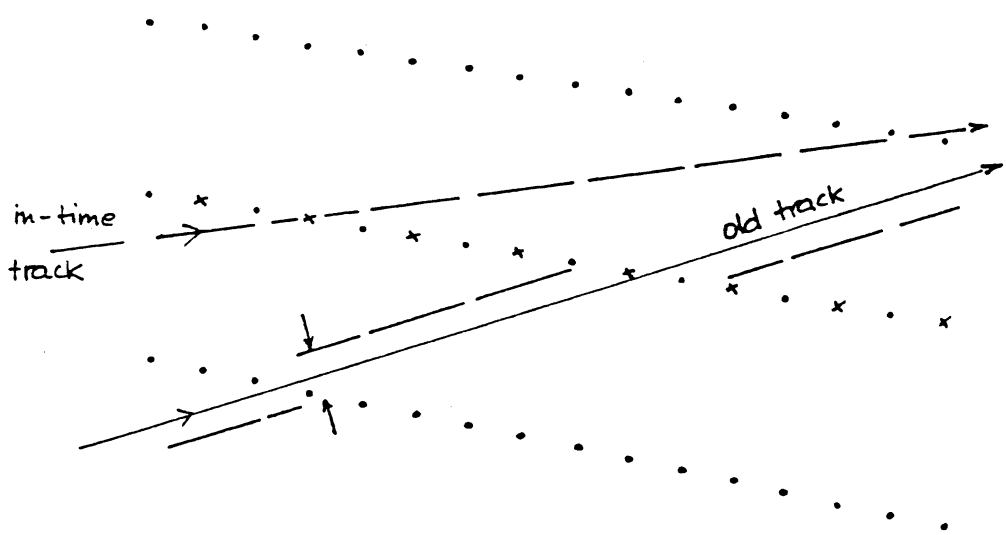

Fig. 1b Rotated cells

5mm.

For the electronic read-out of the drift chamber two possible systems already exist which could be used in a high repetition rate environment: The first (used by the MPSII) would allow measurement of timings only, with a sample frequency of > 250 MH_z; the second (built for JADE and OPAL) would allow charge and timing measurements with a sample frequency of 100 MH_z. In both systems the information is temporarily stored in a cyclic buffer and only read out in case of valid trigger.

Based on these principles the working group has developed a possible layout of a tracking detector covering the central rapidity region of $|\eta| < 1.5$. A cylindrical drift chamber, Length = 4m, Radius = 1.5m would be placed in a solenoid (B = 10KGauss) with 110 radial layers of sense wires, arranged in cells of 8 wires each. A special vertex detector would be located close to the beam pipe. With such a detector a momentum resolution of $\Delta p_T/p_T^2 = 1.10^{-3}$ could be reached which would allow determination of the sign of particles up to momenta of 500 GeV/c.

The conclusions of the working group were that tracking is feasible and desirable at a large hadron collider, and that the prefered mode of operation of the collider would yield one event per bunch crossing. A review of techniques showed that based on present technologies pictorial drift chambers can be used as tracking detectors. They would provide good momentum resolution and be a powerful tool in the event reconstruction.

5.5 Vertex Detection*

As the previous section on tracking devices makes clear, the accurate identificaton of primary interaction vertices is essential, for example to determine the occurence of multiple collisions per bunch crossing and to ensure good resolution in such quantities as jet-jet invariant masses. Precise vertex position measurement also enables a search for secondary vertices for heavy flavour tagging and lifetime measurement. The group has considered three possible methods applicable to a special high resolution vertex detector.

1. Silicon micro-strip detectors.

Present technology provides wafers of area $\sim 7 \times 7 cm^2$ with a micro-strip pitch of 20μ on one surface. With individual strip read-out a position resolution $\sigma_x \sim 6 \mu m$ can be obtained (in one dimension) and a double-track resolution better than $\sim 100 \mu m$.

The time resolution is determined by the transit time in Si (5 to 10ns), the preamp rise-time ($\sim$50ns) and the sample time ($\sim$50ns).

For application at LHC the following improvements would be required.

a) Time resoluton: transit time can be reduced ($\sim$6ns) by using thinner wafers, 200μm instead of 300μm (200μm is about 0.2% of a radiation length). The preamp rise time and sample times should be reducible to $\lesssim$25ns.

---

* This summary, by J. Mulvey, is based on transparencies used by A. Wagner who gave a joint report for the tracking-chambers and vertex detectors study groups at the Open Session of the Workshop.

b) Methods need to be found to permit longer structures, of 30cm or more.

c) By putting crossed strips on the two surfaces two particle-coordinates can be obtained per wafer (with some correlation through the energy-loss).

d) The severe problem of read-out connections (2,500 strips per 5cm) is on the way to being solved through the use of L.S.I. technology, putting read-out and multiplexing electronics onto chips.

2. Charge coupled devices (CCD).

These provide a bi-dimensional array with cell-sizes currently $\sim 22 \times 22 \mu m^2$ and a cell density $\sim 2.10^5 cm^{-2}$. The measured resolution is $\sigma_x = \sigma_y \sim 5.5$ μm, and the data consists of real space-points. Present technology uses a single read-out channel per CCD; this is very slow giving a read-out time for $1cm^2$ of $\sim$20ms.

The requirements for application at the LHC would be much more stringent:

a) A fast-clear in 25ns is necessary (at present the CCD is cleared by reading).

b) During read-out the CCD must be rendered in-sensitive.

A possible solution is to use a CCD with separate detection and storage zones; the latter would have a very thin depletion layer ($\sim 10 \mu m$) and be insensitive to the passage of charged particles. A fast clear would then also be possible.

Clearly a considerable research and development effort is required.

3. Scintillating fibres.

This method would use a matrix of scintillating fibres, laid around the intersection region with the fibre axis along the Z-direction (ie parallel to the colliding beams). Plastic fibres of diameter $\sim$100μm are available and $\sim$25μm is possible; glass fibres can be obtained of 10μm diameter. Thus very high granularity in r and ϕ is possible, but there is no measurement of Z with this arrangement. At present read out is by Image Intensifier (low noise I.I. are available with resolution $\sim$25μ) onto CCD.

For application at LHC the questions of time resolution and gating of the detection system require further study.

4. Super-conducting detectors.

The group has not had time to investigate this possibility, however the application of Josephson junction devices deserves very serious study. The time resolution attainable by detection of the change of state of a Josephson junction on the passage through it of a charged particle is in the 1 to 10ps range. Spatial granularities should be similar to the CCD.

5. Application

A high resolution vertex detector can be used in conjuction with large tracking detectors, or be considered as supplying all necessary track and vertex information.

In the first case the minimum requirements for the

different cases considered are:

a) Solid-state: 2 layers of CCD, or 3 layers of silicon micro-strip (doubled sided with crossed strips), to construct vectors which can be associated with tracks in the large tracking chamber.
b) Scintillating fibre: 3 rings.
c) gas vertex-chamber: 10 to 20 layers.

The preference today, as judged by the potential performance, would be:

1. CCD
2. Si-microstrip (double-sided crossed-strips)
3. Scintillating fibres or gas vertex-chamber.

An all-silicon vertex and tracking device has been considered. It would have $\sigma_{r\theta}$ $\sim$5μm, a granularity $\sim$20μm, and consist of 10 layers spaced over a radius of 2 to 30cm. In a field of 2 to 3T this would yield the same resolution as a large gas detector. Among the problems to be solved are alignment, pattern recognition with $\sim$10 layers versus $\sim$100 layers, electronic noise, and read-out.

Another very important question, on which serious R&D is required, is that of the life-time of these detectors (indeed all types of detectors) and the associated micro-electronics in the presence of radiation. It seems that in terms of sensitivity to radiation the likely life-times, in decreasing order, are electronics, gas-chambers, silicon. Measurements suggest that silicon detectors would not suffer serious degredation from 1 year exposure at an LHC with luminosity

3.10^{32}, if one counts only the particles emerging from the pp interactions.

6. Conclusions.

Solid state detectors are capable of the spatial resolution required, but a major programme of R&D is necessary to establish fast read-out times ($\lesssim$25ns) and to develop the large scale integration of the read-out electronics onto the detector. In the case of CCDs fast-clear and de-sensitisation during read-out are necessary.

In all cases more study is required of the life-times against radiation damage.

5.6 Triggering for Experiments at LHC - by J. Garvey (Birmingham)

The problems posed by a high luminosity hadron collider and which must be solved by a trigger system are those of efficiently selecting wanted events without degradation of information in the presence of a very high interaction rate. By way of illustration at a luminosity of $\sim 10^{33} cm^{-2} s^{-1}$ the total interaction rate is about 10Hz for a total cross section $\sim$100mb.

The implications of many interactions per crossing, and of bunch spacings of 25ns or less are considered. Then a rather more detailed evaluation is made of a trigger system appropriate for 25ns spacing and luminosity $4.10^{32} cm^{-2} s^{-1}$ (corresponding to one of the operating conditions referred to by G. Brianti).

(i) Implications of many interactions per crossing. There is no

doubt that for certain types of physics signatures it is possible to extract useful experimental results from data taken when more than one interaction occurs per crossing. Most of the interactions are of the minimum-bias category, consisting of many low p_T tracks. Once the data has been fully reconstructed the existence of two, or more, vertices will become evident provided there is a tracking-chamber (The vertices will have a spread of about 30cm FWHM). With sufficiently accurate pointing it should then be possible to allocate calorimeter cell hits to each vertex, especially in the central rapidity region, and unravel individual interactions. This seems possible for superpositions of minimum-bias events on an event containing a high p_T jet or an isolated high p_T electron, say, but less plausible in the case of multiple lower p_T jets with missing E_T, and other more complex conditions.

Moreover, the situation is radically different for the trigger selection of events, for at this stage there is no way of separating the calorimeter, or other, information from the different vertices. Again, some simple conditions, such as the large localised energy deposition from a single high p_T jet, can be recognised but more specialised triggers are likely to be hopelessly confused. The use of multiple interactions per crossing should not be completely excluded, but will greatly increase the difficulties at trigger level and in the following sections one interaction per crossing is assumed.

(ii) The implications of short bunch spacing in time.

If the time between crossings, and so interactions, is

25ns then for each calorimeter cell all the energy produced by an event should ideally produce a voltage pulse which has returned to zero within 25ns. This perfect condition would cause no confusion for a trigger deciding whether to retain the data for further scrutiny. However present day calorimeters, except perhaps those using silicon or scintillator plus fast wavelength shifter, produce pulses lasting $\sim$100ns. A fast trigger can still be achieved by clipping, but in the process the intrinsic energy resolution can be significantly degraded; the full, un-clipped information may be stored for subsequent use (no problem if the cell-occupancy is low so that successive events do not overlap in the same cells) but the quality of information available to the trigger will be poorer. The minimum length of the clipped pulse obviously depends on the rise time of the calorimeter signal. For rise times of $\sim$10ns, clipping to 25ns is clearly acceptable though with considerable loss of energy resolution; but clipping to $\sim$10ns, for $\sim$10ns bunch spacing, is not.

(iii) Trigger philosophy.

Rather than consider specific physics signatures, the group has chosen a flexible approach based on a number of discrete elements of data which can then be combined in a variety of different ways to generate selection criteria. This philosophy, illustrated in figure 1, has been used with success in UA1.

input-trigger

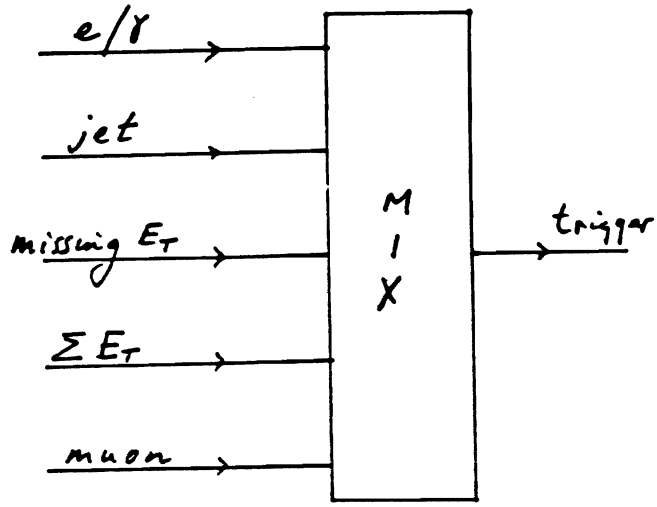

A three-level trigger has been considered as defined in Table 1.

TABLE 1

Level	Decision Time	Input Rate s^{-1}	Output Rate s^{-1}	Dead Time
1	~100ns	~4×10^7	$\lesssim10^5$	0
2	$\lesssim$10μs	$\lesssim10^5$	200 → 1000	~0
3	Parallel Processing	200 → 1000	~1	~0

Level 1

It is important that level 1 does not introduce dead-time; to achieve this with an interaction spacing of ~25ns and decision time as long as 100ns the data from the event must be 'pipe-lined'. For speed, level 1 operates with analogue signals which must be clipped to less than 25ns. As an illustration, four parallel channels form the appropriate sums of detector cell pulses for electron, jet, missing E_T and ΣE_T triggers; each channel checks the summed analogue

pulse against two discriminator thresholds and out-puts two logical bits into a logical mixing circuit; a logical bit is also received from the muon detector. At the mixing stage combinations of electron, jet, missing E_T, ΣE_T and muon, can be selected to give the level 1 trigger. The decision time for such a scheme is estimated to be $\sim$100ns.

Level 2

This level must reduce the number of interesting events from $\lesssim 10^5$ to a few hundred per second in about 10μs, a time depending on the input rate. This level is also made dead-time-less by allowing the buffer memory to hold event signals passing level 1, as shown schematically in figure 2.

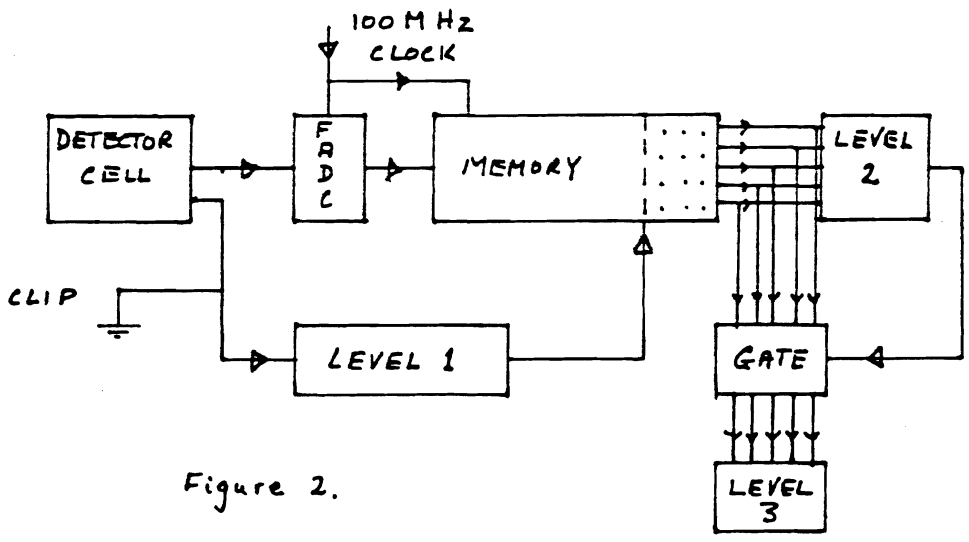

Figure 2.

Each detector cell is clocked with a 100 MHz clock through a flash ADC and into a memory. If after $\sim$100ns the level 1 decision is to keep the event, the memory locations are protected. If not the memory is overwritten by the next interaction. It is intended that

the digitized pulse heights in the memory are the ones which eventually are recorded and used for off-line analysis. Level 2 accesses these signals when it is ready and if the event is to be retained for level 3 analysis it is gated through. Level 2 works with fully digitized unclipped signals. With these it forms, by use of RAMs and adding trees, sums over calorimeter cells appropriate to electron, jet, missing E_T and ΣE_T which are then passed to comparitors with pre-set reference levels. Triggers on jets and electrons will use 2-dimensional clustering logic with appropriately sized cells. Triggers on isolated electrons can also veto on hadron calorimeter energy, and require that the cluster is isolated. If electrons inside jets are to be selected these criteria cannot be used and higher energy thresholds will be necessary. The outputs of the logic are mixed so that any combination of triggers can be selected to retain the event at level 3; the level 2 processing time is estimated to be a few μs.

Level 3

Level 3 reaches an out-put rate of about 1 Hz by complete processing of the events from level 2, as described in the following section on Data Acquisition.

5.7 Data Acquisition and Data Processing - by D. Linglin (L.A.P.P.)

The task of the DACQ/processing group has been to examine the trends in the present large experiments and to propose by extrapolation a scheme that could reasonably operate with higher event rates and sizes in 10-15 years.

In the past decades, one has observed a general move to install

computer "intelligence" as early as possible in the data taking system, going along with growing detector complexity and event rates, and with the rapid development of the electronics and computer world. Not so long ago, recorded data were only looked at in off-line computer centres. We observe now that more and more decision processes, monitoring or calibration program, and even partial reconstruction are made locally near the detector or in the control room, either on the on-line computer of the experiment or better, in dedicated μPs. This "upstream move" will certainly continue in the years ahead, given its many advantages.

On the other hand, flexibility is an absolute must. LHC large 4π detectors to observe physics in a new energy domain must be ready to adapt to many scenarios, either surprising event topologies or increasing luminosity. Hence implementation of trigger algorithms (new topologies or better understanding of the data) must be easy to do. Also, the CPU capacity of the high level triggers must be flexible.

Our proposal, which solves reasonably well these trends is based on 3 main ideas:

- A high speed DACQ Bus.
- A single system, with very large CPU capacity, to concentrate all high level triggers ("level 3").
- Data storage and processing mainly at the experiment.

Let us describe now in more detail a possible scheme (Figs. 1 & 2) and its main consequences:

"LEVEL 2" : The so-called level-2 trigger has been outlined in the previous section. As for the level-2 DACQ system (the readout), it is proposed to hold there, in sequence, the digitizers (10-100

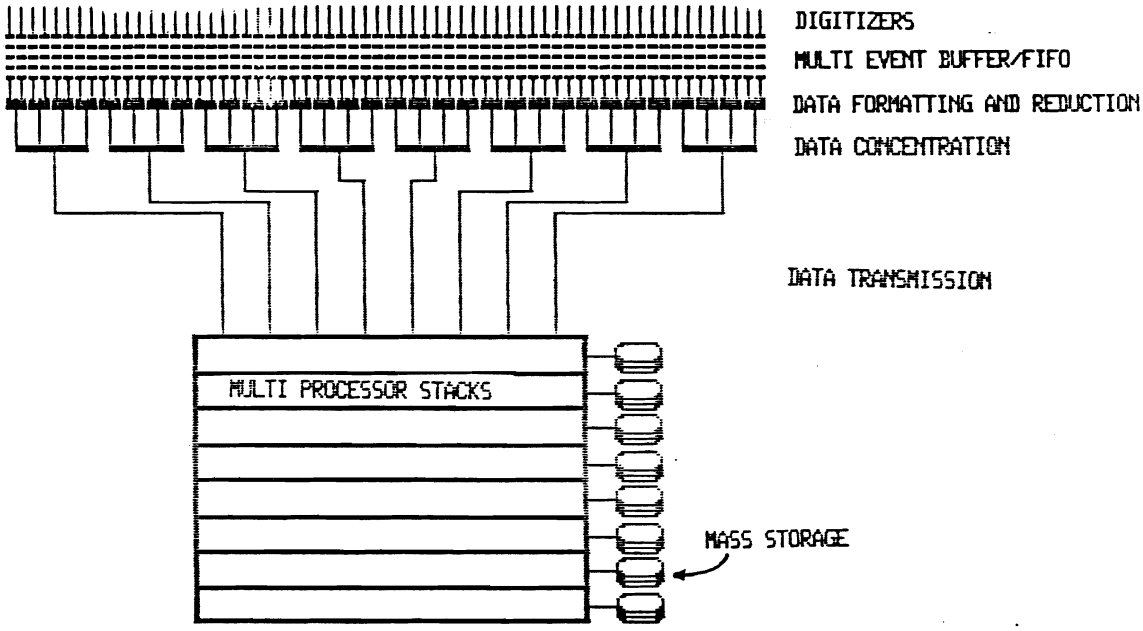
DIGITIZERS
MULTI EVENT BUFFER/FIFO
DATA FORMATTING AND REDUCTION
DATA CONCENTRATION
DATA TRANSMISSION
MULTI PROCESSOR STACKS
MASS STORAGE

Fig. 1

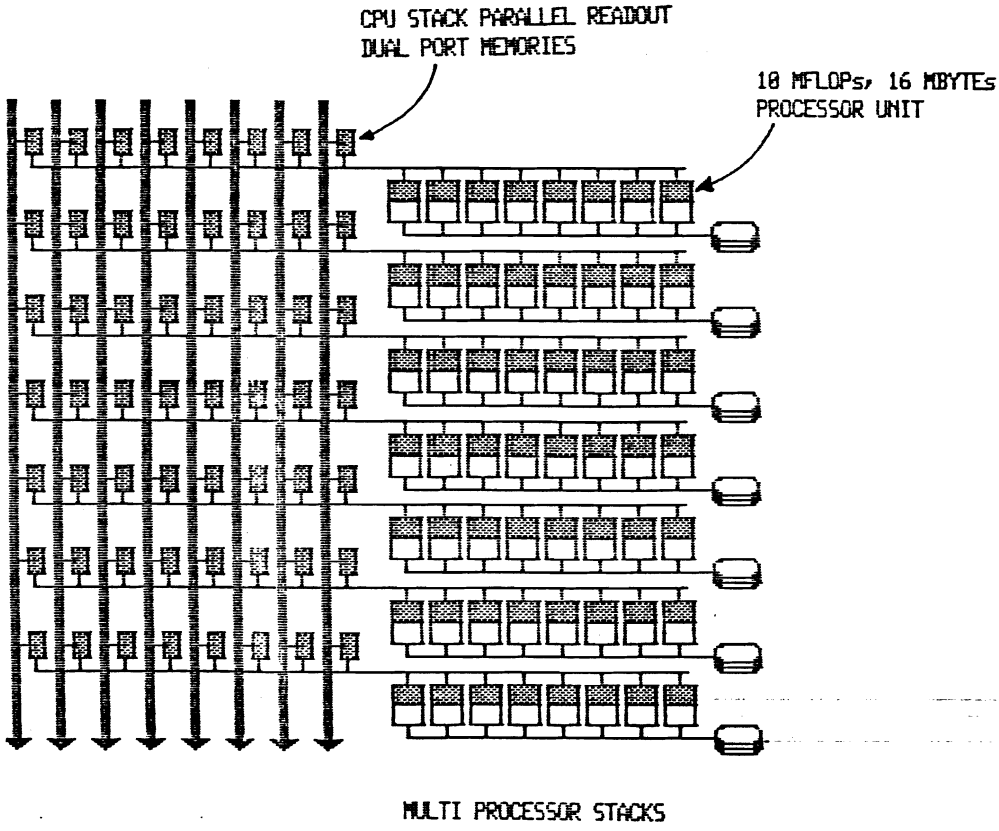
CPU STACK PARALLEL READOUT
DUAL PORT MEMORIES
10 MFLOPs, 16 MBYTEs
PROCESSOR UNIT
MULTI PROCESSOR STACKS

Fig. 2

μs), FIFO multi event buffer memories (to derandomize event arrival time), data formatting and reduction, and finally, data concentration to put together parallel event pieces into a small number of branches that form the DACQ bus. Canonical numbers usually quoted are a maximum rate of 1 KHz for an event size of 1 Mbyte at the exit of level 2 to enter the DACQ bus.

DATA ACQUISITION BUS : This bus should be able to sustain a rate of 1 Gbyte/sec (1KHz x 1Mbyte) over a distance of 50-100m. Presumably this will only be feasible with several ($N \simeq 10 \rightarrow 25$) parallel branches and presumably with optical fibres. Research and Development will be desired in this field.

LEVEL 3 : The event information is still in N separate pieces when it arrives in the control room at the end of the DACQ bus. It is proposed to instal there a large ($50 \rightarrow 1000$) number of processor units ("3081 emulator-like"), as shown on fig. 2. Each unit of this stack has typically a CPU speed of 10 Mflops with 10-16 Mbytes of central memory. Each incoming event selects the first unit available and, depending upon the bits set by lower level triggers, one starts one of the fast filter programs. If the event passes the test, one starts a second, more elaborate, selection program, etc.. Possibly, the few remaining events can be fully reconstructed before being recorded. With enough memory, each unit can hold all the filter and reconstruction programs and play the role of several-in-one high level triggers. Moreover, the scheme allows a flexible number of μP units, to match increasing luminosity, level 2 rates or decreasing cost per unit, and an easy implementation of new algorithms (the development of which depends mainly on off-line, analysis of previous data).

RECORDING : The best choice foreseen as recording medium seems to be the optical disk (although magtapes may have not yet given their last word). With rather cheap disk systems available in 10 years from now, one can choose between a good "juke-box" or disk pack system or 5-20 independent disk drives, as on fig. 2. Although it would be possible to record rates as high 10-50 Hz, we feel one should aim at a standard rate of 1-5 Hz maximum.

PROCESSING : With all the experiment data base available in the control room and such a large CPU capacity, the reconstruction and data reduction (DST's) should be made with the multiprocessor stack (off-line or better, on-line when one has enough confidence in the programs). This would ease all the side aspects like bookkeeping, calibration constant base, etc.

ANALYSIS : Analysis (and developments) will either be done on private workstations or on large mainframes because of the niceties which are not available with the level 3 stack. To provide data information to any laboratory, disks can be copied and shipped around collaborations. Individual events can flow as well from the control room through inter-computers networks. However, for bulk analysis, the best scheme would be to connect private workstations to the on-line computer ("supervisor") and from there, use the stack and the data base.

CONCLUSION : The above scheme follows the present trends and is flexible enough to adapt to many scenarios. The computer industry should deliver by LHC turn-on time, at a reasonable cost, all the elements. Some R&D however might be needed on fast data busses.

5.8 Forward Physics - taken from transparencies of G. Mathiae (Rome) by M. Jacob.

At present we may attempt to foresee forward physics in the multi-TeV region as the extrapoloation of the recent measurements made at the $p\bar{p}$ collider, which have been themselves the continuation of experiments first done at the ISR.

The measurement of the total cross section and of elastic scattering will imply similar measurements but at very small angles. The study of Diffractive Excitation, in its single or double mode, and the study of Double Pomeron exchange processes can also be considered as the continuation of hadron physics at ISR energies - all this should be feasible in the multi-TeV range, as will be discussed in the proceedings.

The expectation value for the total cross section cannot be predicted with the same confidence as has been possible for the $p\bar{p}$ collider. We are still lacking a precise measurement of σ_{tot} and a measurement of ρ (the ratio between the real part and the imaginary part of the elastic forward amplitude) at collider energy. This should however be available later in 1984. At present one may only say that, at $\sqrt{s}$ = 20 TeV, the total cross section should be anything between 90 and 130 mb. The lower value corresponds to a total cross section eventually reaching a constant value; the higher one corresponds to a $(\ln s)^2$ extrapolation of present results.

The forward slope b, as defined by parametizing $d\sigma/_{dt}$ as $\exp(bt)$ ($|t|<0.1(\mathrm{GeV}/c)^2$) is expected to continue its logarithic

rise to reach a value of the order of 19 to 20 $(GeV/c)^{-2}$ at $\sqrt{s}$=20 TeV.

The shoulder-dip structure met at $|t| \sim 1 (GeV/c)^2$ at SPS energies is expected to move inwards as the diffraction radius shrinks and should result in some prominent structure at $|t| \sim 0.5 (GeV/c)^2$; another, though less pronounced, structure could develop at $|t| \sim 2 (GeV/c)^2$, although its presence seems to be model dependent.

Single diffractive excitation can be easily tagged through the quasi elastic scattering of an incident particle with fractional momentum x ; the diffractively excited mass squared is $M^2 = s(1-x)$. At present with $x>0.95$ one can follow diffractive excitation up to $M \sim 100$ GeV at the collider (12 GeV at the ISR). We have no reason to expect that it could not extend up to $M \sim 4.5$ TeV at $\sqrt{s}$=20 TeV.

This sets the stage for the type of experimentation which can be considered, merely continuing with present physics. In so doing there are direct implications for the properties of the intersection region.

(i) One should be able to modify the β value which has a direct relation to the beam size, the beam divergence, the luminosity and so the lowest $|t|$ value reachable and the achievable resolution in t. ($\Delta t = \sqrt{s}\sqrt{|t|}\Delta\theta$).

(ii) The distance of the insertion quadrupoles would have to be larger than for small β insertion.

(iii) The detectors (Roman pots for elastic scattering but also spectrometers or calorimeters) should to a large extent be very closely associated with the machine.

Such constraints on the machine are not imposed by a "standard" experiment, focussing on production at rather wide angles.

This being said, experimentation with elastic scattering appears possible. One could use $\beta_H^*=\beta_V^*$ = 3000m at very low $|t|$ ($|t_{min}| \sim 10^{-3}(GeV/c)^2$). The luminosity would be 10^{29} and Δt of the order of $3 \times 10^{-3}\sqrt{|t|}$. This would allow one to reach well into the Coulomb region; at low $|t|$($|t| \sim 0.1$ to 0.01 $(GeV/c)^2$) one could use $\beta_H^*=\beta_V^*=500m$ ($|t_{min}| \sim 0.005(GeV/c)^2$). The luminosity would be 6×10^{29} and Δt of the order of $7 \times 10^{-3}\sqrt{|t|}$. At larger $|t|$ values (0.1 to 2 say) one could use $\beta_H^*=\beta_V^*=10m$; the luminosity would be 3×10^{31} and Δt of the order of $0.05\sqrt{|t|}$.

These values are obtained starting from a standard design with $\beta_H^*=\beta_V^*=1m$ and a luminosity of 3×10^{32}. Considering diffractive excitation a rather good resolution $\frac{\Delta M}{M} \sim 0.5 \times 10^{-2}$ could be reached even at M = 2 TeV. The corresponding 10^{-4} resolution for the measurement of the momentum of the quasi elastically scattered proton could be achieved with a spectrometer about 500m long, but relying on the bending power of the machine dipoles.

While present forward-physics will continue into very-forward-physics in the multi-TeV range, in a way which is found manageable, the wide angle physics of today will also continue into the forward physics of tomorrow.

This is due to the fact that secondaries with mass $m \ll \sqrt{s}$ are expected to be produced with a rather flat rapidity plateau, which, when translated into angular distribution, concentrates most of the production yield at relatively forward angles. Hence the nickname "angle of archaelogy" to describe the fact that as the acceptable

collision energy increases (with time) secondaries of a particular mass are more and more abundantly produced, but dominantly appear at smaller and smaller angles. A mass can indeed characterize a time by itself (M_W for the present, mainly at wide angles).

Forward detectors at the future colliders may therefore be very interesting to study in detail the production mechanism of the new particles of today. This should be worth doing with 10^3 Z°/hours expected in the dilepton modes, but with fragment particles most often within a few degrees of the beam direction! This question was therefore also studied in some detail during the Workshop and will also be discussed in the proceedings.

6. CONCLUSIONS

In view of the ICFA Seminar on Future Perspectives in High Energy Physics which is to be held at the KEK laboratory Tokyo, in May 1984, ECFA and CERN have organized a Workshop to make a first examination of the feasibility of putting a multi-TeV hadron collider in the LEP tunnel. This timing is also reasonable when one considers the need for research and development on the next generation of super-conducting magnets, and the inherently long time scales for the planning of such projects. The context in which this study should be seen is that of a natural, long-term extension of the exploitation of the existing, or soon to exist, facilities on the CERN site.

Experiments at the SPS $p\bar{p}$ collider have demonstrated the existence of the W and Z bosons, and have shown with unexpected clarity the possibility of studying constituent (gluon and quark) interactions at high energy. Now it is becoming appropriate to ask questions aimed beyond the "standard model", and to look for clues to the nature of the symmetry breaking which endows particles with mass. There is a strong concensus that these clues lie not too far away from us in energy, in the region of 1 TeV for the centre-of-mass energy of colliding constituents or leptons.

LEP in phase 1 will be an intense source of Z° bosons, a cornucopia of physics; if light enough, the Higgs particle may be found and studied among its decay products. LEP is unique in its potential to go higher in energy where it will make crucial tests of the gauge structure of the electroweak theory, a structure now taken to be the basis of the present search for a complete, unified theory of Nature's forces. LEP will make possible the study of lepton-lepton collisions at the highest energy likely to be reached until new methods of acceleration are developed and used in the linear-collider mode (a mode for which the SLC at Stanford will be the first trial). In this high energy phase, LEP may well bring us already into a domain of physics beyond the standard model. In any case, the very precise interpretation possible with such a simple initial state, electron and positron, could reveal important clues to what may lie ahead.

But to reach into the TeV region, at the constituent level, one must, to-day, look at hadron colliders, pp or $p\bar{p}$, in the 10 TeV to 20 TeV range.

The feasibility of such a machine in the LEP tunnel and its use, have been the objectives for this Workshop. The conslusions reached can be summarized briefly as follows.

Physics

Conclusions reached have already been stated on pp. 3 and 4. The highest energy would be desirable, but there is no known threshold; the key point is to reach at least 1 TeV at the constituent level. A high luminosity, say $\sim 10^{33}$ cm^{-2} sec^{-1}, would be an important asset. According to present wisdom, differences between pp and $\bar{p}p$ induced reactions would be in most cases too small to be detectable.

Machine

Conclusions reached have already been stated on p.4. Such a machine could be built but research and development on magnets is crucial.

Experimentation

i) In most cases present-day technologies, or reasonable extrapolations of them, would be adequate for detectors at a 20 TeV hadron collider with a luminosity $\sim 10^{33}$ cm^{-2} s^{-1}.

ii) The average number of interactions per bunch crossing, n , should not be greater than one; the consequently short interval, 25 ns, between bunch crossings can be accommodated.

iii) Research and development is needed to reduce the response times of detector elements, especially for calorimeters and solid-state vertex detectors. This is particularly necessary if higher luminosity can be reached by going to an even shorter interval, 12.5 ns, between bunches.

iv) Faster data busses are required, and it is assumed that powerful, low cost processors (similar to '3081E') will be available from industry for data acquisition and processing.

Finally, the facilities of the CERN site form a feasible basis for an economical extension to explore a new energy region where the basic constituents of today collide at energies of the order of 1 TeV, and where "new physics" beyond the standard model can be expected.

REFERENCES

1) Proceedings of the LEP Summer Study Les Houches and CERN, 1978 CERN 79-01 (1979).
ECFA-LEP Working Group 1979, Progress Report ECFA/79/39 (1979), A. Zichichi, Ed.

2) Proceedings of the 4th Topical Workshop on Proton-Antiproton Collider Physics, Bern (1984), B. Hahn, Ed. See, in particular, the reports from the UA1 and UA2 collaborations.

3) C. Rubbia. Some Significant Physics Objectives of the $p\bar{p}$ Collider. Proceedings of the EPS International Conference on High Energy Physics. Geneva 1979; CERN-1980, p. 791.
R. Horgan and M. Jacob, Physics at Collider Energies, CERN-DESY School of Physics, 1980, CERN 81-04 (1981).