DØ Engineering Note
3823-111-EN-483

THERMAL SAFETY OF THE CURRENT BUSES IN THE CHIMNEY OF THE DØ SOLENOID

R. P. Smith
January 20, 1998

ABSTRACT

The thermal and electrical behaviour of the current buses in the chimney of the DØ solenoid during upset conditions is modeled to guide the selection of trip levels for magnet protection circuits which discharge the magnet if abnormal conditions are detected.

1 DESCRIPTION OF THE CHIMNEY BUSES

DC current is carried to the solenoid from the control dewar via superconducting buses in the system service chimney. The vacuum-insulated chimney is nearly 14 meters long and it also carries supply and return lines for two-phase helium and nitrogen required to refrigerate the magnet during normal operation.

Each current bus in the chimney was fabricated by soft-soldering together two magnet conductors in parallel. The positive and negative buses are mechanically clamped together separated by a layer of dielectric insulation; the same clamping system mechanically and thermally anchors the pair to the helium supply pipe in the chimney.

In Figures 1 – 4 are shown details of the chimney. Figure 1 shows the narrow cross section ("obround") portion which is routed between the ends of the central (CC) and end (EC) calorimeters. The narrow available gap between the CC and EC constrained the shape of the chimney in this region.

Figure 2 shows a typical (round) cross section in the portion of the chimney which leaves the CC-EC interface and makes its way to the control dewar. The bolted aluminum clamps which fasten the buses to the helium pipe are typically 10 cm long axially and are spaced 6 cm apart along the bus.

Figure 3 details a "field joint" region in the chimney. There are two such field joints in the chimney – one where the round chimney joins to the end of the obround segment near the calorimeters and the other near the control dewar. The field joints permit the chimney to be disassembled for system shipment. At the field joints the current buses are lapped along a length of 30 cm and soft-soldered together. The joined buses are clamped to each other separated by a thick dielectric pad. The clamps are insulated electrically from the buses by a wrapping of kapton/glass-epoxy approximately 0.3 mm thick, but are fastened directly to the cooling tube by bolts which press the clamp halves together.

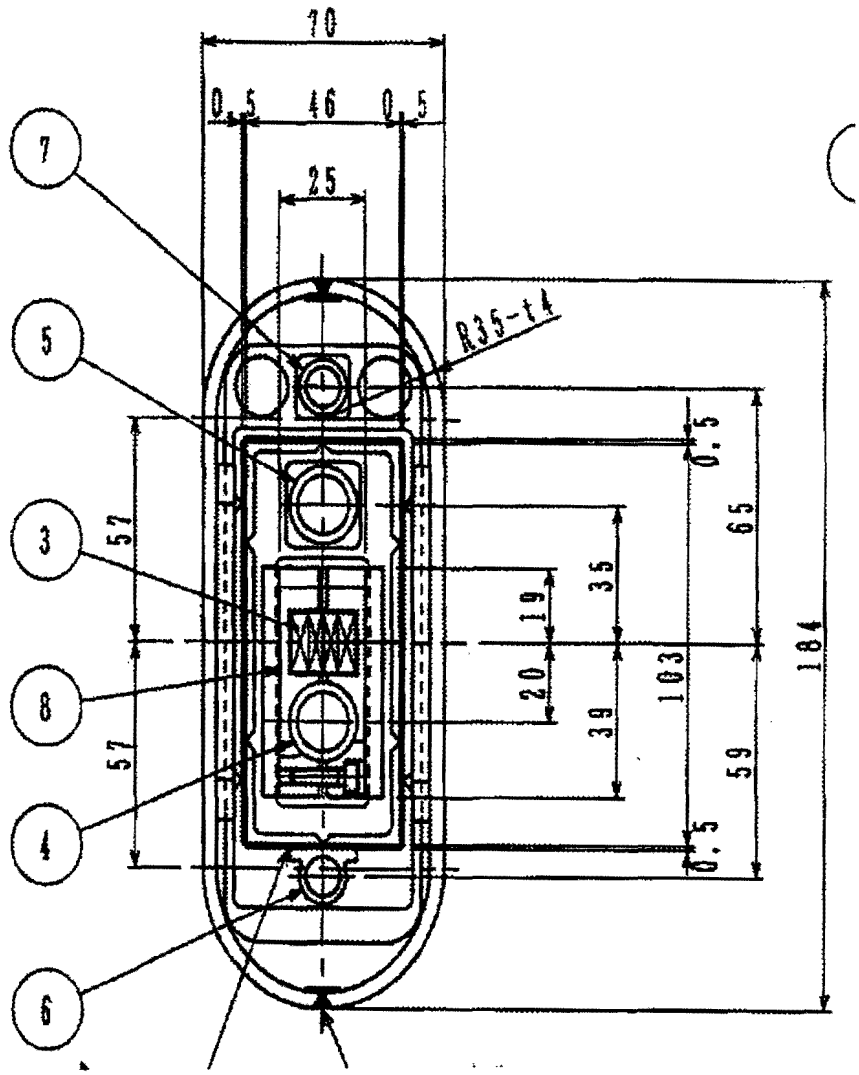

Figure 1: Cross Section of the Obround Chimney. Element 3 is the current bus pair and element 4 is the helium supply pipe. Element 8 denotes one of the clamps which fastens the bus pair together and to the helium pipe. Element 5 is the helium return pipe and elements 6 and 7 the supply and return nitrogen pipes.

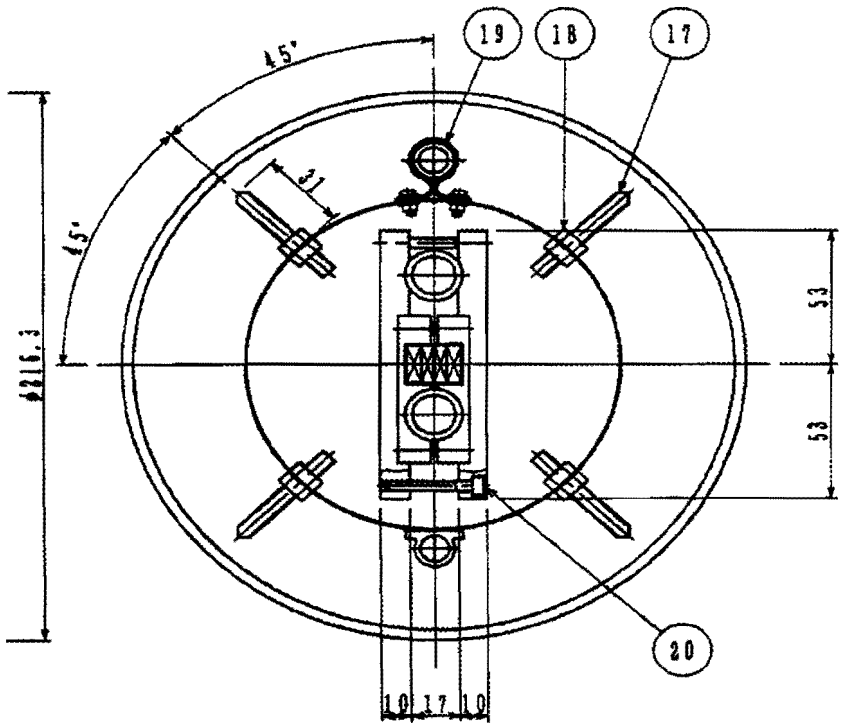

Figure 2: Cross Section of the Round Chimney. Elements 17 and 18 are bumpers which provide assurance that the nitrogen shield operating at 80 K does not contact the 300 K vacuum jacket of the chimney. Element 20 details a typical bolt in a typical aluminum clamp which fastens the buses to the helium cooling pipe.

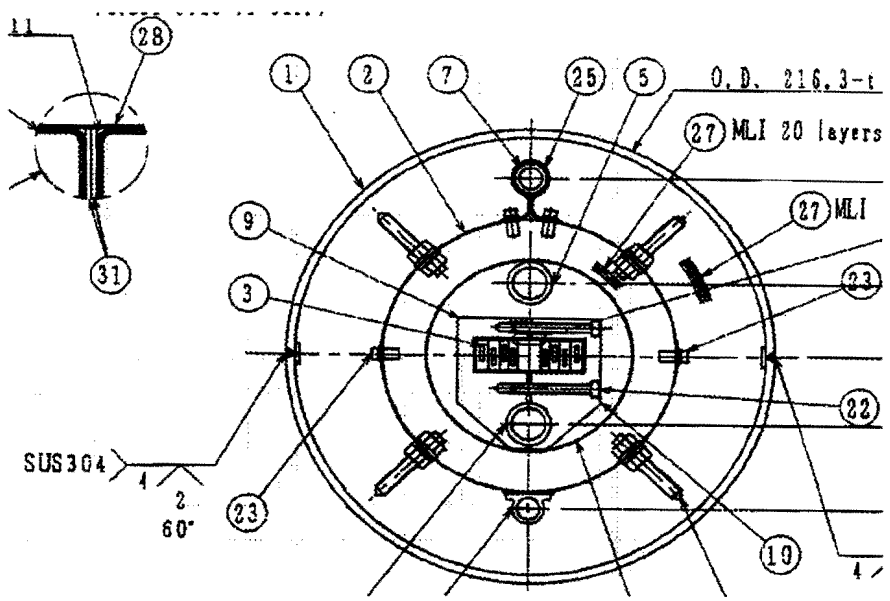

Figure 3: Chimney Detail at Field Joint. Element 10 is the special clamp required at the field joint. The inset details the dielectric separator (element 31) and bus insulation (element 28) between buses in regions away from the field joints.

Figure 4 details the axial spacing of the clamps which fasten together the positive and negative buses and which attach the bus pair to the helium cooling tube. The outer boundaries in the drawing represent the chimney vacuum vessel. Just inside the vacuum vessel are shown the nitrogen shield piping lines, and within these the helium piping, current buses and clamps. The clamps are nominally 100 mm long and spaced 60 mm from one another axially along the helium piping. Special clamps are used when required for support of the internal piping or to limit the nominal axial gaps between clamps to 6 cm.

It should be noted that at the bends in the chimney the clamps are omitted. Thus there is a length of about 350 mm or less of bus which is not clamped to the helium cooling pipe at the four bends. The buses in these segments are therefore not directly cooled by the clamps but rely on conduction cooling axially along the bus away from the bends to the straight sections were cooling clamps are provided.

2 NORMAL BUS OPERATION

The helium supply pipe (15 mm ID) in the chimney contains subcooled liquid (vapor fraction 0%) at 4.7 K or less. Ignoring enhanced heat transfer effects from the pipe to the helium due to flow conditions in the pipe, nucleate boiling heat fluxes to stagnant two-phase helium are at least as high as 0.2 W/cm^2 at the pipe wall inner surface, enabling the helium to absorb 1 W/cm of pipe length with minimum temperature elevation (0.1 K or less) of the

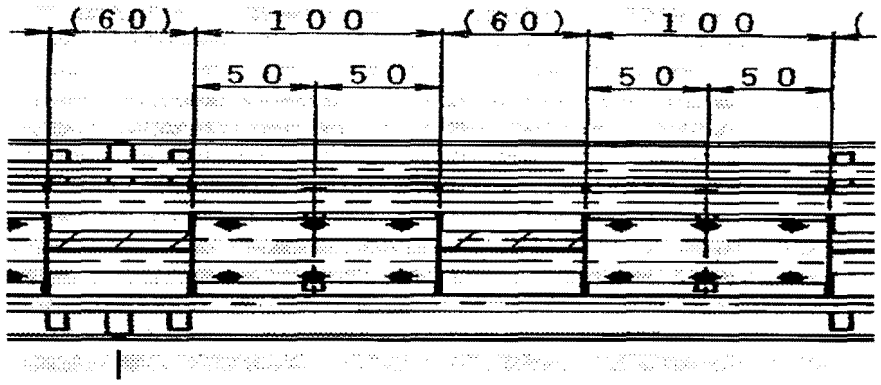

Figure 4: Axial Distribution of bus clamps in the chimney.

pipe. Because the clamp system covers only 60% of the pipe length this corresponds to at least 0.6 W/cm of cooling available to the bus in the straight sections.

If the two buses were completely non-superconducting the current flowing in the aluminum stabilizer in the buses would generate ohmic heating of 0.22 W/cm of bus length. (The bus geometrical and electrical parameters required to develop this number are provided in the sections below). Because this is much less than the cooling power provided by the clamp and pipe system, it is expected that if the buses were ever driven normal for any reason they would rapidly recool and return to the superconducting state.

At least in the straight sections they would therefore exhibit the familiar behaviour of "cryostability", i.e. they are so well cooled they cannot quench unless they experience a major cryogenic upset which drastically reduces the cooling in the helium pipe.

Note that at such a heating rate the corresponding temperature elevation of the buses above the helium cooling pipe due to the finite thermal conductivity of the electrical insulation on the buses and that of the aluminum clamp itself is about 2.3 K. Since the helium temperature in the pipe is always less than 4.7 K this yields a maximum temperature in the normally-conducting bus of 7 K. This is less than the transition temperature of the superconductor in the bus (everywhere else greater than the value of 8.4 K near the nozzle where the magnetic field approaches 2 T).

Since there is less cooling available to the buses at the bends this expectation would be modified at these locations. In section 4 below it is shown that if only axial cooling is available to the bus then any normal region shorter than about 400 mm will not propagate but will recover and disappear. This observation provides reassurance that the buses in the bends will not operate in the non-superconducting state as long as cooling is maintained. Of course, this same calculation further reinforces the expectation that the buses in the straight sections are absolutely stable as long as proper cooling is maintained.

3 WORST-CASE BUS THERMAL RUNAWAY

As was shown above only a drastic loss of cooling can lead to conditions in which the buses become vulnerable to being driven normal and subsequently operating in the ohmic regime.

Nevertheless an estimate of how long such heating might continue before the bus is damaged provides insight into how quickly such a situation must be detected and the magnet discharged.

Assuming no heat is conducted away from a resistive segment of the bus, the Joule heating in the segment for a time dt increases the temperature in the segment an amount $d\theta$:

$$J^2\rho(\theta)AL\ dt\ =\ C_p(\theta)AL\ d\theta.$$

Here J is the current density in the bus, ρ its electrical resistivity, A the cross-sectional area of the bus, L the length of the resistive segment, and C_p its specific heat per unit volume. Collecting the temperature-dependent terms and integrating we have

$$\int_0^T J^2\ dt\ =\ \int_c^\Theta C_p(\theta)/\rho(\theta)d\theta$$

for a finite heating time T and final temperature Θ. Here the lower limit c to the temperature integral is the transition temperature of the superconductor and this may be set to 0 without introducing serious error in the integral. We note that the length of the normal section does not appear in the final enthalpy relation.

The magnet conductor consists of an 18-strand superconducting cable embedded in a matrix of high-purity aluminum. Two grades of conductor, G1 and G2, are used in the magnet, each utilizing the same superconducting cable but having different amounts of aluminum stabilizer added. Each chimney bus is made from one each of the two conductor grades. and the cross-sectional area of aluminum in the two is 78.2 and 58.8 mm^2 respectively. The superconducting cable constitutes a cross-sectional area of 10.2 mm^2 in each conductor so the total aluminum area in the bus is 117 mm^2. At the nominal operating current of the magnet, 4825 A, the current density in the aluminum is $J = 4.12 \times 10^7\ A/m^2$.

The integral over temperature has been calculated [1] for a variety of metallic conductors and from these calculations we find that for a choice of final temperature $\Theta = 300\ K$. the current integral is about $6\times10^{16}\ As/m^2$ for high purity aluminum having RRR = 500 (Figure 5).

Inserting this value in the enthalpy integral above, the corresponding time is

$$T = 6 \times 10^{16}/(4.12 \times 10^7)^2 = 35.3\ sec.$$

Thus if a segment of the bus becomes normal for any reason the full bus current must flow 35 seconds before the bus reaches 300 K, assuming there is no cooling available to the bus.

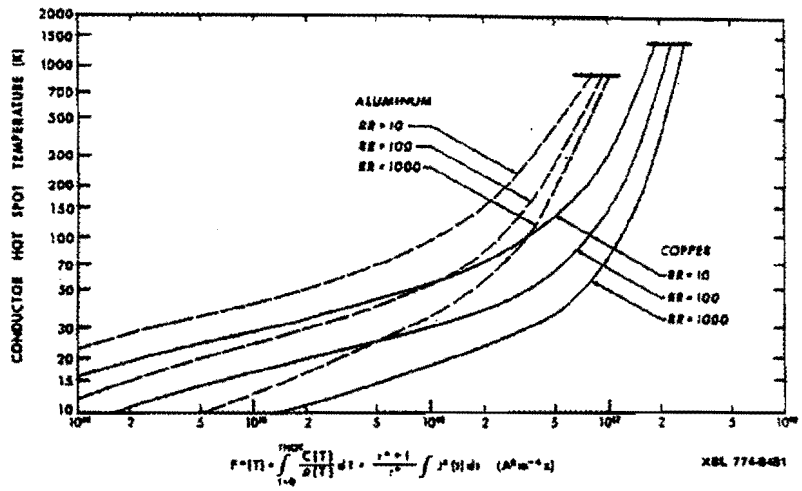

Figure 5: Enthalpy/resistivity integrals for various metallic conductors, from Reference 1.

4 MINIMUM PROPAGATING ZONE (MPZ)

In the foregoing there is no information about how much or little of the bus might be expected to heat resistively after a segment has gone normal. By taking into account cooling [2] it can be shown that a given normal zone will either grow or collapse depending on its size. The amount of heat generated in a normal zone depends on the length of the zone; considering heat conduction away from the zone only in the axial direction, such heat may be sufficient to raise additional nearby portions of the conductor above the critical temperature. This effectively lengthens the resistive zone and increases the joule heating. The original normal zone was larger than the MPZ.

Alternatively, the heating may be insufficient to drive additional conductor normal. The normal zone decreases in length and finally collapses altogether. The original normal region was smaller than the MPZ.

Schematically the MPZ condition is given by:

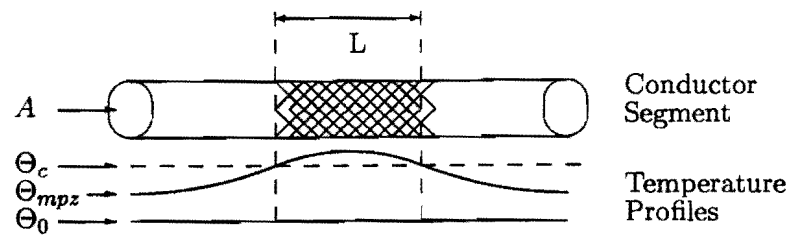

Since the segment L has $T \geq T_c$ it is resistive and joule heating is produced in it. Equating this heat production with the axial conduction away from L at both ends of the segment,

$$J^2 \rho A L = 2kA(\theta_c - \theta_o)/L,$$

or,

$$L = \left\{2k(\theta_c - \theta_o)/(J^2\rho)\right\}^{1/2}.$$

Since RRR $\geq$ 500 for the high-purity aluminum in the buses in the chimney,

$$\rho \leq 2.7 \times 10^{-6}/500 = 5.4 \times 10^{-9} \; Ohm \; cm.$$

The magnetic field on the superconductor in the buses is greatest near the magnet where it does not exceed 2 T, so the critical temperature is always greater than

$$\theta_c(B) = \theta c(0) \left\{1. - B/B_{c2}(0)\right\}^{0.59}$$

using Lubell's [3] formula for commercial NbTi. The magnet nominal temperature does not exceed 5 K during chargeup so $\theta_o = 5K$ is conservative in the chimney. With $B_{c2} = 14.5\ T$ and $\theta_c(0) = 9.2\ K$, $\theta_c(2T) = 8.4\ K$.

From the Wiedemann-Franz Law, the resistivity and thermal conductivity of the aluminum are related:

$$L_o\theta = k(\theta)\rho(\theta),$$

where $L_o = 5.4 \times 10^{-8}\ W\Omega/m$. With the value of ρ given above the Wiedemann-Franz relation gives $k(5K) = 2.3 \times 10^3\ W/mK$. Hence

$$\begin{aligned} L &= \left\{2 \times 23 \times (8.4 - 5.0)/(4.3 \times 10^3)^2(5.4 \times 10^{-9}\right\}^{1/2} \\ &= 39.5\ cm \end{aligned}$$

Away from the nozzle the field on the superconductor in the buses does not exceed that of the self-field of the conductors, about 0.3 T. This increases the critical temperature to about 9 K so that L increases to about 43 cm.

Note that the heat required to create an MPZ is quite small – on the order of 3.5 milliJoules. The magnetic force between the positive and negative buses is about 758 N/m (repulsive). If one bus moved inelastically due to this force, sufficient energy to create an MPZ in the bus would be released after a displacement of only 10 microns.

5 VOLTAGE DROP ON A NORMAL SEGMENT

The shortest segment of a bus that can remain normal is about 40 cm. The voltage drop on such a segment is

$$\Delta V(5K) \;=\; 4825 \times \rho L_o/A = 4825 \times 5.4 \times 10^{-9}\, 40/1.17 = 0.9mV.$$

Such a voltage drop would not be easy to detect unambiguously in an environment that is likely to be somewhat noisy.

If the normal segment did not collapse but instead continued to heat until its temperature reached 100 K, the RRR of the aluminum will have decreased to about 5 so that the voltage drop is 100 times larger than at 5 K:

$$\Delta V(100K) = 90mV.$$

Such a voltage drop would be easily detected.

In fact a normal zone of any size larger than the MPZ length will not heat without increasing in length. Wilson [2] estimates the velocity with which the length of the segment increases:

$$v \;\approx\; (J/C_p)\,\{L_o\theta_c/(\theta_c - \theta_o)\}^{1/2}\,.$$

Since $J = 4.12 \times 10^7\ A/m^2$, and $C_p = 3 \times 10^3\ J/m^3K$ at 5 K, this yields $v \;\approx\; 3\ m/s$.

Once a normal length of MPZ size occurs the entire length of the bus will be driven normal in a few seconds or less. The voltage drop signal will therefore grow even more rapidly than estimated above.

Conversely, if a normal zone does not reach the MPZ threshold length it collapses in 100 msec or less.

6 QUENCHING THE NEIGHBORING BUS

In the unlikely event the protection circuitry fails to react to the substantial voltage drop expected on a quenching bus, it is of some interest to see if the other bus is driven normal, thereby providing the opportunity for a redundant detection of the abnormal condition.

The heat generated in the MPZ zone is $J^2\rho A\ L \;=\; 4.3\ W$. An amount of heat of this magnitude is therefore required to sustain an MPZ zone in the neighboring superconducting bus. In the foregoing discussion of MPZ behaviour in a quenching bus, heat conduction across the insulation between the two buses was ignored. In fact such conduction will take place and will serve as a source of heating to the neighboring superconducting bus.

Since the insulation thickness between the buses is $\Delta x = 1.3mm$, the contact area between the two buses is $L \times w = 43 \times 1.5\ cm^2$ and for G-10 at 10 K, $k = 0.1W/mK$, the temperature difference between the two buses required to sustain this amount of heating is

$$\begin{aligned} \Delta\theta &= Q\Delta z/kA, \\ &= 4.3 \times 1.3 \times 10^{-3}/0.1W \times 1.5 \times 43 \\ &= 9K \end{aligned}$$

Clearly when a significant length of the quenching bus reaches 18 K or so an MPZ in the neighboring bus above 9 K will be generated. Thus it too will quench.

7 THE TRANSITION BUSES

The chimney buses are clamped to heavy copper transition buses below the subcooler helium vessel in the control dewar vacuum space. These copper buses in turn conduct the current into the subcooler vessel to the bottoms of the vapor cooled leads above the liquid level in the subcooler. The copper buses are themselves shorted by six superconducting Nb_3Sn wires soldered into grooves in the buses.

The copper buses are 16 mm in diameter and made of ETP (CDA 110) copper, with RRR $\approx$ 100. If the buses were driven normal for any reason the ohmic heating in them would correspond to a surface heat flux of 0.049 W/cm^2. The lower portions of the buses are always immersed in liquid helium in the subcooler so they are amply cryostable given this very small heat flux to the liquid.

The upper portion (never more than 10 cm in length) that operates in cold helium gas must conduct its ohmic heat to its upper and lower cold ends always at 5 K or less. The omhic heat generated in this segment is about 2.5 W, implying that the warm central portion of the uncooled region reaches about 7.1 K since the thermal conductivity of the copper is about 6 W/cmK. The Nb_3Sn at this temperature can carry at least a factor of 2.5 times the magnet operating current and remain in the superconducting state.

The region in the vacuum space where the chimney buses are clamped to the bottoms of the copper buses generates about 9 milliwatts. This trivial amount of heat is readily conducted into the helium with negligible temperature rise. The heat generated at the top of the copper buses where they are soldered to the bottom of the vapor cooled leads is substantially greater – about 3 W. This heat is continuously removed by the cooling of the helium gas in the leads.

As was done for the buses in the chimney, a thermal runaway calculation indicates that if liquid cooling were lost in the subcooler the copper transition buses would require nearly 260 seconds to reach 300 K, using the curve for RRR = 100 copper of Figure 5. Clearly the loss of liquid in the subcooler vessel would trigger a magnet discharge long before the copper buses reached 300 K.

It might be remarked that if the cold copper buses were for some reason not superconducting the voltage drop on them would be only 4 mV. The quench detection system might not easily detect such a condition however harmless it might be. In this quite unlikely

and unphysical situation the extra helium boiloff due to the heating in one of them would be nearly 0.6 g/s. This condition would soon be noticed by the system operators since it represents nearly a doubling of the nominal boiloff rate.

In fact after a loss helium in the subcooler leading to the quenching of the copper buses they would inevitably begin to heat. When they reach 200 K the voltage drop on them would increase to 200 mV making detection of the upset unambiguous.

8 BUS TEST DATA

During the testing of the solenoid control dewar and chimney at the Toshiba factory in December, 1996, the abbreviated system was operated in a mode deliberately intended to cause the bus to quench. For the tests the buses in the chimney at the lower field joint were soldered together, and the piping routed back on itself at that point, and the entire joint region enclosed in a temporary vacuum-tight "boot".

With the current at 4750 A and conditions otherwise essentially stable elsewhere throughout the system, the helium supply dewar was valved off and the liquid helium in the chimney allowed to decrease. After approximately 20 minutes an abrupt increase in the summed voltage drop on the two buses in the chimney was observed by the Toshiba technicians and the power supply was turned off manually.

All those present at the tests were surprised that the bus remained superconducting so long after helium flow was stopped. Because no automatic control system was in use at the time, it is likely the buses operated at full current after quench for at least a few seconds, as judged by the Fermilab engineer who witnessed the test.

In any event, the bus was not damaged and it was seen to quench rapidly and presumably completely. Such a test was not repeated later after the magnet was added to the system. An alternate approach to the required test of quenching without a protection resistor was devised instead. It is likely however that in any such test the magnet would quench before the bus in the chimney since the magnet conductor experiences much higher magnetic fields than does the conductor in the chimney.

During tests of the full system later at Toshiba it was not possible to observe whether or not the buses quenched during magnet quenches which were deliberately induced to fulfill the required test schedule. It may be possible to make these observations during system commissioning tests at Fermilab.

9 CONCLUSIONS

The current buses in the chimney are designed to operate safely without likelihood of loss of superconductivity as long as normal cooling conditions are maintained. Helium liquid level probes, helium flow instrumentation, and thermometry all are provided to certify that proper cooling conditions exist in the subcooler and chimney at all times. Rising temperatures in any portion of the system, excessive voltage drops on the vapor cooled leads, or decreasing

liquid level in the subcooler or flow rate in the system, will each cause the fast discharge system to be triggered.

Postulated failures of the helium flow system, somehow undetected by any and all of the aforementioned instrumentation, can in principal eventually lead to loss of superconductivity in the buses. Quenching in one bus will rapidly lead to quenching in the other. Potential taps on the buses and magnet coil halves connected to voltage-detection bridges external to the system provide at least dually redundant signals which will unambiguously trigger the magnet rapid discharge system. The conservative design of the bus system ensures that it will not be damaged during such incidents, however improbable they may be.

The transition leads in the subcooler are equally conservatively designed, and would not be damaged if they were operated in a fully non-superconducting state for several minutes. The loss of liquid helium in the subcooler required to cause this condition would imply that helium flow from the magnet had stopped, which in turn would imply that flow to the magnet had also stopped. The lack of flow into the subcooler would result in insufficient flow to the vapor cooled leads. Any or all of these conditions would be detected, as would easily detected spurious voltages on the potential tap system, before damage to the transition leads occurred.

References

[1] M. A. Green, "Large Superconducting Detector Magnets with Ultra Thin Coils for Use in High Energy Accelerators and Storage Rings", p. 429, Proceedings of the 6th Int. Conf. on Magnet Technology, Bratislava, 1977.

[2] M. N. Wilson, Superconducting Magnets, Clarendon Press, Oxford, 1983.

[3] M. Lubell, "Empirical Scaling Formulas for Critical Current and Critical Fields for Commercial NbTi", IEEE Transactions on Magnetics, VOL MAG 19, No. 3, p 754 (1983).