15 JAN 96

ASME CODE AND PRESSURE CALCULATIONS

FOR

LIQUID NITROGEN SUBCOOLER

D-ZERO ENGINEERING NOTE #3823.115-EN-435

October 4, 1995

Andy Kuwazaki and Todd Leicht
RD/D0 Mech.

Approved:

Summary

Included in this engineering note are three separate calculation divisions. The first calculations are the determination of the required thickness of the LN_2 subcooler flat head according to ASME code. This section includes Appendix A-C. The minimum plate thickness determined was 0.563 in. The actual thickness chosen in fabrication was a 3/4" plate milled to 0.594" at the bolt circle. Along with the plate thickness, this section calculates the required reinforcement area at the top plate penetrations. It was found that a 1/4" fillet weld at each penetration was adequate.

The next set of calculations were done to prove that the subcooler internal pressure will always be less than 15 psig and therefore will not be classified as a pressure vessel. The subcooler is always open to a vent pipe.

Appendix D calcualtions show that the vent pipe has a capacity of 1042 lbs/hr if 15 psig is present at the subcooler. It goes on to show that the inlet piping would at that flow rate, see a pressure drop of 104 psig. The maximum supply pressure of the LN_2 storage dewar is 50 psig.

Appendix E addresses required flow rates for steady state, loss of vacuum, or fire conditions. Page E9 shows a summary which states the maximum pressure would be 1.50 psig at fire conditions and internal pressure.

FERMILAB ENGINEERING NOTE	SECTION	PROJECT	SERIAL-CATEGORY	PAGE
	RD/DØ	DØ UPGRADE	3823.115	1

SUBJECT	NAME	
LN_2 SUBCOOLER TOP LID THICKNESS CALC.	TODD LEICHT	
	DATE 5/17/95	REVISION DATE

PURPOSE: FOLLOW ASME CODE TO DETERMINE REQ'D THICKNESS OF LN_2 SUBCOOLER FLAT HEAD.

(SEE APPENDIX "A" FOR LID PENETRATIONS.)

SUBJECT TO: UG-34.(c).(2) "UNSTAYED FLAT HEADS & COVERS"

OUR CONFIGURATION IS SIMILAR TO SKETCH UG-34.(j) WHERE,

$h_g = 15/16'' = .9375''$

$d = 14\,1/8'' = 14.125''$

$t = ?$

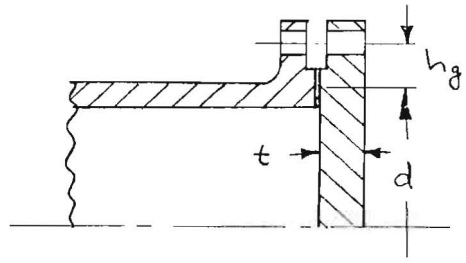

FIGURE 1: LN_2 SUBCOOLER FLAT HEAD DIMENSIONS.

SOLUTION:

EQN. (2) APPLIES $\Rightarrow$ $t = d\sqrt{CP/SE + (1.9)Wh_g/SEd^3}$

$C = 0.3$

$P = 65$ psig , DESIGN PRESSURE

$S = 18{,}800$ psi , MAX. ALLOW TENSILE STRESS (304 S.S. PLATE)

$E = 1.0$, JOINT EFFICIENCY

$W = 16{,}350$ lb , TOTAL BOLT LOAD FROM MANDATORY APPENDIX 2

☆ EQN (2) REQUIRES t BE CALCULATED FOR BOTH OPERATING CONDITIONS & GASKET SEATING.

I WILL FOLLOW SECTION VIII, DIV. 1, APPENDIX 2 TO DETERMINE BOLT LOAD W.

2-1 SCOPE: "PROPER ALLOWANCE SHALL BE MADE IF CONNECTIONS ARE SUBJECT TO EXTERNAL LOADS OTHER THAN EXTERNAL PRESSURE."

THIS WOULD INCLUDE THE ADDITIONAL TENSILE STRESS ON THE BOLTS DUE TO THE METHOD OF SUPPORT OF THE SUBCOOLER.

FIGURE 2: METHOD OF LN_2 SUBCOOLER SUPPORT

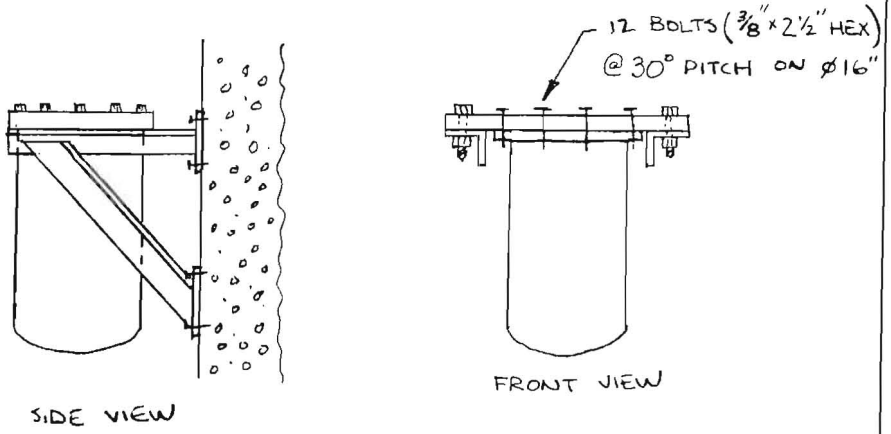

2-4 CIRCULAR FLANGE TYPES:

THE DESIGN CONFORMS TO 2-4(b) "INTEGRAL TYPE FLANGES"

2-5(e) FLANGE DESIGN BOLT LOAD W:

CASE 1: OPERATING CONDITIONS $W = W_{m1}$ (EQN #3)

CASE 2: GASKET SEATING $W = \frac{(A_m + A_b) S_a}{2}$ (EQN #4)

** CHOOSE GREATER OF THE TWO

SUBJECT: LN_2 SUBCOOLER TOP LID THICKNESS CALC.

NAME: TODD LEICHT

DATE: 5/19/95 | REVISION DATE:

CASE ①: ACCORDING TO 2-5 (c.3) THE USE OF SELF-ENERGIZING GASKETS (O-RINGS) DEMANDS THAT THE REQUIRED BOLT LOAD W_{M1} SHALL RESIST THE HYDROSTATIC END FORCE H EXERTED BY THE MAWP ON THE AREA BOUNDED BY THE OUTSIDE DIA OF THE GASKET. $H_P = 0$, UNLESS AXIAL LOADS ARE GENERATED BY CONFIGURATION.

$$W = W_{M1} = H = (.785)\,G^2 P$$

$$W = W_{M1} = (.785)(14.125\text{ in})^2(65\text{ psi}) = 10{,}180\text{ lb}$$

BUT THE BOLTS MUST ALSO CARRY THE WEIGHT OF THE VESSEL AND ITS CONTENTS (LN_2). LET'S DETERMINE MAXIMUM WEIGHT AND ASSUME LN_2 IS FILLED TO THE BOTTOM OF THE INSULATION.

$$v_{SAT.\,LIQ.} = 1.237\ \text{cc/g}$$

ESTIMATE LN_2 VOLUME:

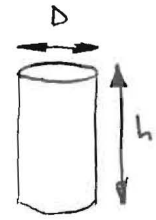

$$V = \frac{\pi}{4} D^2 h$$

$$V = \frac{\pi}{4}(13'')^2(16'') \approx 1.3\text{ ft}^3$$

$$F_{LN_2} = V/v$$

$$F_{LN_2} = (1.3\text{ ft}^3)\left(\frac{62.43\ \text{lb/ft}^3}{1\ \text{g/cc}}\right)\left(\frac{1}{1.237\ \text{cc/g}}\right) = 66\text{ lb}$$

ESTIMATE $F_{DEWAR} \approx 100$ lb

THEN, $F_{TOTAL} = F_{LN_2} + F_{DEWAR} = 166$ lb

LET'S SAY $F_{TOTAL} = 200$ lb TO BE CONSERVATIVE.

FINALLY, $W = W_{M1} + F_{TOTAL} = \boxed{10{,}380\text{ lb}}$

SUBJECT: LN_2 SUBCOOLER TOP LID THICKNESS CALC.

NAME: TODD LEICHT

DATE: 5/19/95 | REVISION DATE:

CASE (2): $W = \dfrac{(A_M + A_b)\,S_a}{2}$

A_M = GREATER OF $A_{M1} = W_{M1}/S_b$ OR $A_{M2} = \cancel{W_{M2}}^{\,0}/S_a$ (SEE 2-5 (c.3.b))

THEN, $A_{M1} = (10{,}380\ \text{lb})/(24\ \text{ksi})$

$A_{M1} = 0.4325\ \text{in}^2$

* ASSUME $S_a = S_b = 0.8(30\ \text{ksi})$

$S_a = S_b = 24\ \text{ksi}$

$A_b = (.0775\ \text{in}^2)(12) = .93\ \text{in}^2$ {FROM TABLE 8.2.2 IN "MARK'S STANDARD HANDBOOK FOR M.E.'S". (FOR 3/8" UNC SCREWS.)}

FINALLY, $W = \dfrac{(.4325\ \text{in}^2 + 0.93\ \text{in}^2)(24\ \text{ksi})}{2}$

$$\boxed{W = 16{,}350\ \text{lb}}$$

∴ THE MAX. BOLT LOAD IS DUE TO GASKET SEATING (CASE 2) AND IS $W = 16{,}350$ lb.

WE CAN NOW FIND t_r, REQUIRED PLATE THICKNESS:

USING EQN #2 ON PAGE 1,

$$t_r = (14.125'')\sqrt{\frac{(.3)(65\ \text{psig})}{(18.8\ \text{ksi})(1.0)} + \frac{(1.9)(16.35\ \text{kips})(.9375'')}{(18.8\ \text{ksi})(1.0)(14.125'')^3}}$$

$$\boxed{t_r = 0.563\ \text{in}}$$

NOW LET'S CONSIDER THE NECESSARY REINFORCEMENT DUE TO THE MANY OPENINGS IN THE FLAT HEAD. SEE APPENDIX "B" FOR DETAILS.

UG-39 REINFORCEMENT REQ'D FOR OPENINGS IN FLAT HEADS:

UG-39(b.2) FOR MULTIPLE OPENINGS CAN BE REINFORCED WHEN SPACING BETWEEN ANY PAIR IS $\geq 2(D_{AVG})$ OF THE PAIR.

AS IN UG-39(b.1)

UG-39(b.1) REQUIRES: $A = 0.5dt$ = X-SECTIONAL AREA OF REINFORCEMENT

$A_{1\frac{1}{2}''\ SCH10} = (0.5)(1.682\ in)(.563\ in)$ $\qquad$ $A_{2''\ SCH5} = (.5)(2.245\ in)(.563\ in)$

$A_{1\frac{1}{2}''} = 0.473\ in^2$ $\qquad$ $A_{2''} = 0.632\ in^2$

UG-40 LIMITS OF REINFORCEMENT:

(b) USE THE LARGER OF: d OR $R_n + t_n + t$
FROM FIG. UG-37.1. SEE APPENDIX B.

$\underline{d_{1\frac{1}{2}''} = 1.682\ in}$, $R_n + t_n + t = (.0841) + (.109) + (.75) = 0.943\ in$

$\underline{d_{2''} = 2.245\ in}$, $R_n + t_n + t = (1.123) + (.065) + (.75) = 1.938\ in$

(c) USE THE SMALLER OF: $2.5t$ OR $2.5\,t_n$

$2.5(t) = 2.5(.75'') = 1.875\ in$, $\quad 2.5(t_n) = 2.5(.109'') = \underline{0.273\ in}$ $1\frac{1}{2}''$ SCH10

$2.5(t_n) = 2.5(.065'') = \underline{0.163\ in}$ 2" SCH 5

(d) DETERMINE METAL WITHIN LIMITS OF REINFORCEMENT THAT MAY BE CONSIDERED TO HAVE REINFORCING VALUE.

$$A_1 = \text{LARGER OF} \begin{cases} (E_1 t - F t_r)\, d \\ 2(E_1 t - F t_r)(t + t_n) \end{cases}$$

$$(E_1 t - F t_r)\, d = \left(1\cdot(.75") - 1\cdot(.563")\right)(1.682") = 0.315 \text{ in}^2$$

$$2(E_1 t - F t_r)(t + t_n) = (2)\left[1\cdot(.75") - 1\cdot(.562")\right](.75" + .109") = 0.321 \text{ in}^2$$

$$\underline{A_1 = 0.321 \text{ in}^2}$$

$$A_2 = \text{SMALLER OF} \begin{cases} (t_n - t_{rn})\, 5t \\ (t_n - t_{rn})\, 5t_n \end{cases}$$

* WE NEED TO FIND t_{rn}, THE REQUIRED VACUUM JACKET THICKNESS TO WITHSTAND 14.7 PSIA EXTERNAL PRESSURE. I WILL FOLLOW UG-28 "THICKNESS OF SHELLS AND TUBES UNDER EXTERNAL PRESSURE."

<u>UG-28 (c.1) - CYLINDERS WITH $D_o/t > 10$</u> :

ASSUME $t = .02$ in

THEN, $D_o/t = 1.9"/.02" = 95$

ASSUME $L/D_o > 50$, SO ENTER FIG. 5-UGO-28.0 AT $L/D_o = 50$.

FROM FIGURE 5-UGO-28.0 : $A = .00012$

FROM FIGURE 5-UHA-28.1 : $B = 1{,}700$ psi WHEN $T = 100°F$

$$P_a = \frac{4B}{3(D_o/t)} = \frac{4(1{,}700 \text{ psi})}{3(1.9"/.02")} = 23.9 \text{ psi}$$

$\therefore$ $t_{rn} = .02"$ GIVES ALMOST A FACTOR OF SAFETY $= 2$.

THIS IS REASONABLE ENOUGH TO USE FOR OUR PURPOSES.

THEN, $A_2 = (.109" - .02")(5)(.75") = 0.338\ in^2$

$A_2 = (.109" - .02")(5)(.109") = .0485\ in^2$

$\underline{A_2 = 0.0485\ in^2}$

ALSO ASSUME ¼" FILLET WELDS ON OUTSIDE & INSIDE OF HEAD.

THEN, $A_{41} = A_{43} = (leg)^2 f_{r_2} = (.25")^2(1) = .0625\ in^2$

$$A_1 + A_2 + A_{41} + A_{43} \overset{?}{\geq} A$$

$$(.321\ in^2) + (.0485\ in^2) + 2(.0625\ in^2) \overset{?}{\geq} A$$

$$0.4945\ in^2 > 0.473\ in^2$$

$$(A_{ACTUAL} > A_{REQ'D})$$

∴ THERE IS ENOUGH REINFORCEMENT AREA FOR THE 1½" SCH 10 V.J.'S WITH ¼" FILLET WELDS ON BOTH SIDES. SEE APPENDIX "C" FOR CALC'S ON REINFORCING THE 2" V.J. FOR THE GN_2 VENT.

SUBJECT: LN_2 SUBCOOLER TOP LID THICKNESS CALC.

NAME: TODD LEICHT

DATE: 5/23/95 | REVISION DATE:

WELDMENT OF VACUUM JACKETS TO FLAT HEAD:

UW-16(d): NECK ATTACHED BY FILLET OR PARTIAL PENETRATION GROOVE WELDS.

FIGURE 4: COPY OF SKETCH UW-16(i)

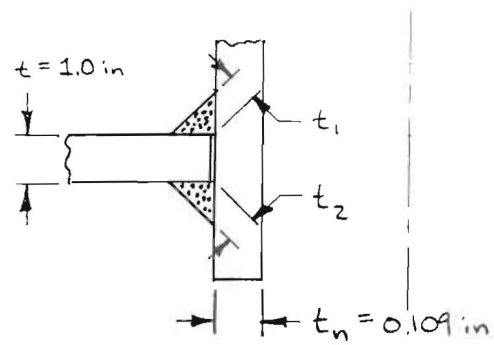

REQ'D:
- $t_1 + t_2 \geq 1\frac{1}{4}\, t_{min}$
- t_1 OR t_2 NOT LESS THAN SMALLER OF $\frac{1}{4}$ in OR $0.7\, t_{min}$

$t_{min} = 0.109$ in

$(1.25)\, t_{min} = 0.13625$ in

$(0.7)\, t_{min} = 0.0763$ in

∴ CHOOSE $\frac{1}{4}''$ FILLET WELD, ALL AROUND ON BOTH SIDES.

APPENDIX "B"

B.1

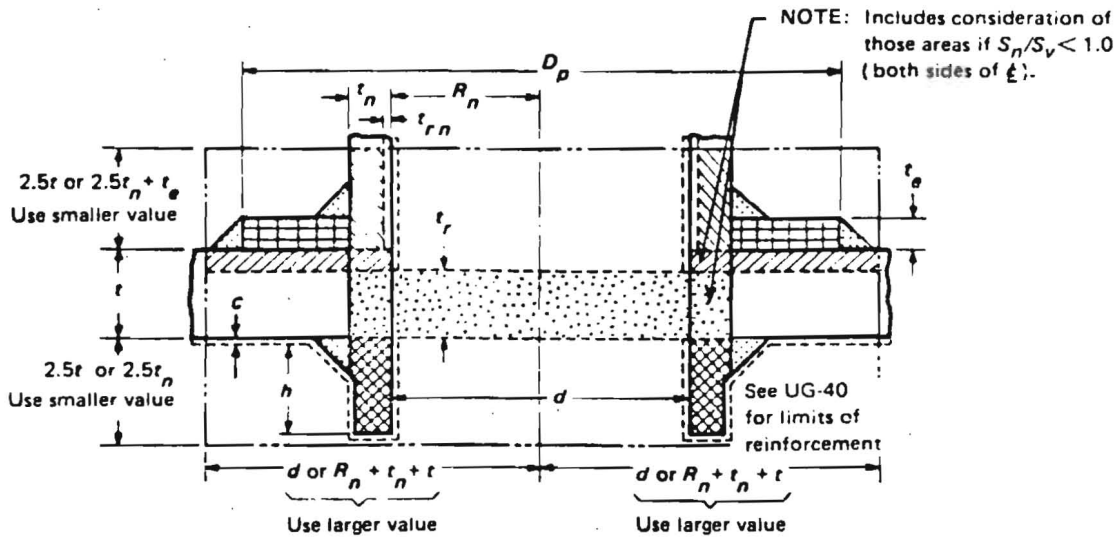

Without Reinforcing Element

= A	$= d\,t_r\,F + 2t_n\,t_r\,(1 - f_{r1})$	Area required
= A_1	$= d(E_1\,t - Ft_r) - 2t_n\,(E_1 t - Ft_r)\,(1 - f_{r1})$ $= 2(t + t_n)(E_1 t - Ft_r) - 2t_n(E_1 t - Ft_r)(1 - f_{r1})$	Area available in shell; use larger value
= A_2	$= 5(t_n - t_{rn})\,f_{r1}\,t$ $= 5(t_n - t_{rn})f_{r1}t_n$	Area available in nozzle projecting outward; use smaller value
= A_3	$= 2(t_n - c)f_{r1}h$	Area available in inward nozzle
= A_{41}	= outward nozzle weld = $(\text{leg})^2 f_{r1}$	Area available in outward weld
= A_{43}	= inward nozzle weld = $(\text{leg})^2 f_{r1}$	Area available in inward weld
If $A_1 + A_2 + A_3 + A_{41} + A_{43} \geq A$		Opening is adequately reinforced
If $A_1 + A_2 + A_3 + A_{41} + A_{43} < A$		Opening is not adequately reinforced so reinforcing elements must be added and/or thicknesses must be increased

With Reinforcing Element Added

A	= same as A, above	Area required
A_1	= same as A_1, above	Area available
A_2	$= 5(t_n - t_{rn})\,f_{r1}\,t$ $= 2(t_n - t_{rn})\,(2.5t_n + t_e)f_{r1}$	Area available in nozzle projecting outward; use smaller area
A_3	= same as A_3, above	Area available in inward nozzle
= A_{41}	= outward nozzle weld = $(\text{leg})^2 f_{r2}$	Area available in outward weld
= A_{42}	= outer element weld = $(\text{leg})^2 f_{r3}$	Area available in outer weld
= A_{43}	= inward nozzle weld = $(\text{leg})^2 f_{r1}$	Area available in inward weld
= A_5	$= (D_p - d - 2t_n)\,t_e\,f_{r3}$	Area available in element
If $A_1 + A_2 + A_3 + A_{41} + A_{42} + A_{43} + A_5 \geq A$		Opening is adequately reinforced

FIG. L-7 EXAMPLE OF A REINFORCED OPENING
(This Figure Illustrates a Common Nozzle Configuration and Is Not Intended to Prohibit Other Configurations Permitted by the Code.)

FERMILAB ENGINEERING NOTE	SECTION	PROJECT	SERIAL-CATEGORY	PAGE
	RD/DØ	DØ UPGRADE	5823.115	C.1

SUBJECT	NAME	
LN_2 SUBCOOLER TOP LID THICKNESS CALC.	TODD M. LEICHT	
	DATE 7/24/95	REVISION DATE

PURPOSE: DETERMINE REINFORCEMENT AREA REQ'D IF VENT LINE IS 3/4" SCH10 X 2" SCH 10 V.J. OR 2" SCH 40 V.J.

UG-39 REINFORCEMENT REQ'D: $A = 0.5dt$

$$A_{SCH40} = (.5)(2.067\ in)(.563\ in) = .582\ in^2$$

$$A_{SCH10} = (.5)(2.157\ in)(.563\ in) = .607\ in^2$$

UG-28 USED TO FIND t_{rn}:

ASSUME $t = .02$ in

THEN, $D_o/t = 2.375/.02 = 119$

ASSUME $L/D_o > 50$ SO ENTER FIG. G IN SUBPART 3 OF SECTION II AT $L/D_o = 50$.

FROM FIG. G: $A = .00007$

FROM FIG. HA-1: $B = 1{,}300$ psi UP TO 100°F

$$P_a = \frac{4B}{3(D_o/t)} = \frac{4(1{,}300)}{3(119)} = 14.6\ psi$$

$\therefore t_{rn} = 0.21$ WILL GIVE A MAX. WORKING PRESS $P_a \geq 14.7$ psi.

UG-40 LIMITS OF REINFORCEMENT:

FOR 2" SCH 40 PIPE

$$A_1 = \begin{cases} (1\cdot(.75") - 1\cdot(.563"))(2.067") = \underline{.387\ in^2} \\ -(1\cdot(.75") - 1\cdot(.563"))(.75" + .154") = .338\ in^2 \end{cases}$$

$$A_2 = \begin{cases} (.154" - .021")(5)(.75") = .499\ in^2 \\ (.154" - .021")(5)(.154") = \underline{.102\ in^2} \end{cases}$$

FERMILAB ENGINEERING NOTE	SECTION	PROJECT	SERIAL-CATEGORY	PAGE
	RD/DØ	DØ UPGRADE	3823.115	C.2

SUBJECT	NAME	
LN_2 SUBCOOLER TOP LID THICKNESS CALC.	TODD M. LEICHT	
	DATE 7/24/95	REVISION DATE

FOR 2" SCH 10 PIPE

$$A_1 = \begin{cases} (.75'' - .563'')(2.157'') = \underline{.403\ in^2} \\ (.75'' - .563'')(.75'' + .109'') = .161\ in^2 \end{cases}$$

$$A_2 = \begin{cases} (.109'' - .021'')(5)(.75'') = .33\ in^2 \\ (.109'' - .021'')(5)(.109'') = \underline{.0480\ in^2} \end{cases}$$

ALSO ASSUME ¼" FILLET WELD ON BOTH SIDES:

$$\therefore A_{41} = A_{43} = .0625\ in^2$$

$$A_1 + A_2 + A_{41} + A_{43} \overset{?}{\geq} A$$

$$A_{SCH\,40} = .582\ in^2 \overset{?}{\leq} .387 + .102 + 2(.0625) = .614\ in^2$$

$\therefore$ SCH 40 WILL WORK FOR THE GN_2 VENT V.J.

$$A_{SCH\,10} = .607\ in^2 \overset{?}{\leq} .403 + .0480 + 2(.0625) = .576\ in^2$$

$\therefore$ SCH 10 WILL <u>NOT</u> WORK!

PURPOSE: CHECK PRESSURE GENERATED IN THE LN_2 SUBCOOLER VESSEL DURING INITIAL COOLDOWN WITH MAXIMUM FLOW CONDITIONS.

SCHEMATIC:

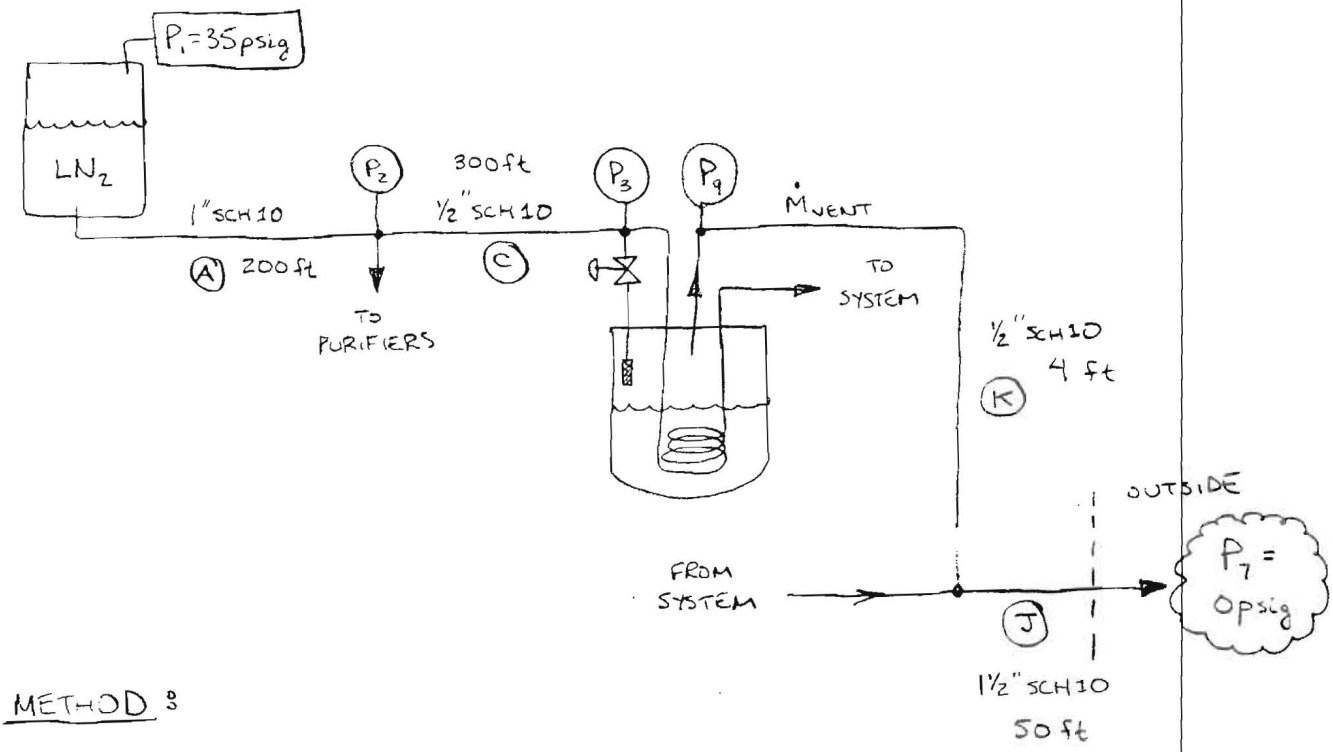

METHOD:

DUE TO THE FACT THAT THE LN_2 PIPING IS QUITE COMPLICATED WITH SEVERAL BRANCHES I WILL MAKE SEVERAL SIMPLIFYING ASSUMPTIONS IN ORDER TO ARRIVE AT A MAXIMUM, WORST-CASE CONDITION. THIS CONDITION WILL RESULT IN THE HIGHEST POSSIBLE PRESSURE IN THE LN_2 SUBCOOLER VESSEL, P_9. THE APPROACH I WILL TAKE IS AS FOLLOWS:

1) CALCULATE MAX. FLOW FROM DEWAR TO SUBCOOLER ASSUMING:
   1. NO FLOW TO PURIFIERS
   2. $P_1 = 35$ psig
   3. $P_3 = 0$ psig

2) ASSUMING ALL OF THE FLOW CALCULATED IN PART (1) GOES TO COOL THE SUBCOOLER, CALCULATE THE ΔP FROM THE VESSEL TO ATM. THRU THE VENT LINE, $P_9 - P_7 = P_{VESSEL}$, psig.

STEP 1:

MORE ASSUMPTIONS:
1. FULLY TURBULENT FLOW (ALLOWS FOR 1ST GUESS OF f)
2. SAT. LIQ. PROPERTIES THROUGHOUT

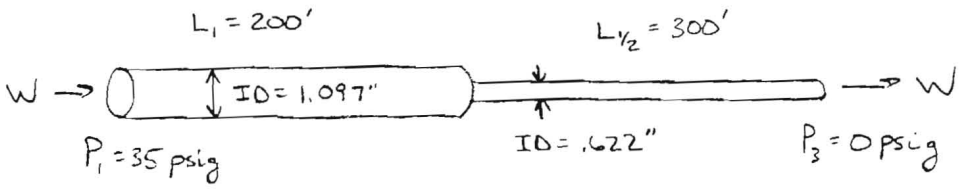

DETERMINE K VALUES FOR BOTH PIPE SECTIONS.

ε/D FOR 1" SCH 10 S.S. = .0018 $\Rightarrow f_{TURB} = .023$

ε/D FOR ½" SCH 10 S.S. = .0035 $\Rightarrow f_{TURB} = .0275$

$$K_1 = f\frac{L_1}{D_1} = (.023)\frac{(200\text{ ft})}{(1.097\text{ in})}(12\text{ in/ft}) = 50.32$$

$$K_{1/2} = f\frac{L_{1/2}}{D_{1/2}} = (.0275)\frac{(300\text{ ft})}{(.622\text{ in})}(12\text{ in/ft}) = 159.2$$

CONVERT $K_{1/2}$ TO EQUIVALENT K FOR 1" SCH 10 PIPE:

FROM CRANE: $K'_{1/2} = K_{1/2}\left(\frac{d_1}{d_{1/2}}\right)^4$ EQ. 3-24

$$K'_{1/2} = (159.2)\left(\frac{1.097\text{ in}}{.622\text{ in}}\right)^4 = 1540.3$$

$$K_{1,TOTAL} = K_1 + K'_{1/2} = 1591$$

NOW APPLY CRANE'S EQ. 3-14: $\Delta P = 2.8\times10^{-7}\frac{KW^2}{\rho d^4}$

$$W = \sqrt{\frac{\Delta P \rho d^4}{2.8\times10^{-7}K}}$$

ρ @ 1.2 ATM = .8012 g/cc = 50.02 lb/ft³

$$W = \sqrt{\frac{(35\text{ psi})(50.02\text{ lb/ft}^3)(1.097\text{ in})^4}{(2.8\times10^{-7})(1591)}}$$

$W = 2{,}386$ lbs/hr OR $Q = 5.88$ gpm LIQUID

NOW CALCULATE REYNOLD'S # TO VERIFY THE ACCURACY OF THE FRICTION FACTOR GUESSES.

$$Re = 6.31 \frac{W}{d\mu} \qquad \mu \text{ @ } P = 1.2 \text{ ATM} = .1430 \text{ cp}$$

$$Re_{1''} = (6.31) \frac{(2{,}386 \text{ lb/hr})}{(1.097 \text{ in})(.1430 \text{ cp})} \approx 96{,}000 \Rightarrow f = .0245$$

$$Re_{1/2''} = (6.31) \frac{(2{,}386 \text{ lb/hr})}{(.622 \text{ in})(.1430 \text{ cp})} \approx 169{,}300 \Rightarrow f = .027$$

RECALCULATE K'S TO FIND NEW $K_{1,\text{TOTAL}}$.

$$K_1 = f \frac{L_1}{D_1} = (.0245) \frac{(200 \text{ ft})}{(1.097 \text{ in})} (12 \text{ in/ft}) = 53.6$$

$$K_{1/2} = (.027) \frac{(300 \text{ ft})}{(.622 \text{ in})} (12 \text{ in/ft}) = 156.3$$

$$K'_{1/2} = (156.3) \left(\frac{1.097 \text{ in}}{.622 \text{ in}} \right)^4 = 1512.3$$

SINCE $K'_{1/2}$ GOVERNS $K_{1,\text{TOTAL}}$, AND 1512.3 IS CLOSE ENOUGH TO 1540.3 (< 2% ERROR) I WILL USE THE ORIGINAL $W = 2{,}386$ lb/hr AS MAX. FLOWRATE FROM DEWAR TO SUBCOOLER VESSEL.

STEP 2:

MORE ASSUMPTIONS: 1. ASSUME BOILOFF IS ALL SAT. VAPOR THRU VENT LINE.

$$Re_J = 6.31 \frac{W}{d\mu} \quad ; \quad \mu \text{ @ } P = 1.1 \text{ ATM, SAT. VAP.} = .005344 \text{ cp}$$

$$Re_J = (6.31) \frac{(2386 \text{ lb/hr})}{(1.682 \text{ in})(.005344 \text{ cp})} = 1.675 \times 10^6$$

$$\varepsilon/D = .001 \Rightarrow f = .0195$$

$$K_J = f\frac{L}{D} = (.0195)\frac{(250\,ft)}{(1.682\,in)}(12\,in/ft) = 34.78$$

APPLY DARCY'S EQ. 3-14:

$$\Delta P = 2.8\times10^{-7}\,\frac{KW^2}{\rho^2 d^4}$$; ρ @ P=1.1 ATM SAT VAP. = .005036 g/cc = .3144 lb/ft³

$$\Delta P_J = (2.8\times10^{-7})\frac{(34.78)(2{,}386\,lb/hr)^2}{(.3144\,lb/ft^3)^2(1.682\,in)^4}$$

$$\Delta P_J = 70\ psig$$

THIS IS NOT POSSIBLE BECAUSE $P_1 = 35$ psig !

NOW I'LL TRY TO FIND THE MAX. FLOW THRU THE VENT LINE ASSUMING $P_9 = 15$ psig. THEN I WILL SEE WHAT ΔP_{1-3} IS DEVELOPED IN THE SUPPLY DUE TO THIS FLOWRATE. IF THINGS WORK OUT, $\Delta P_{1-3} \approx 20$ psig.

STEP 18 ASSUME SAT. VAPOR THROUGOUT VENT LINE.

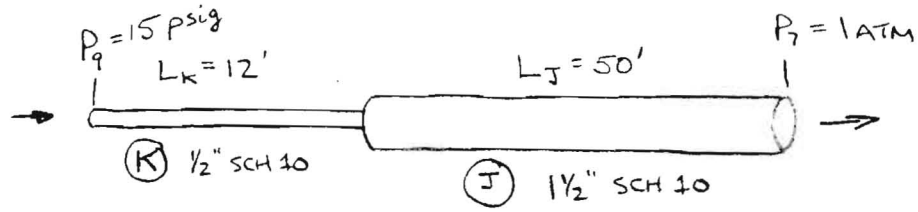

DETERMINE K VALUES FOR SECTIONS K & J.

ϵ/D FOR ½" SCH 10 S.S. = .0035 $\Rightarrow f_{TURB} = .0275$

ϵ/D FOR 1½ SCH 10 S.S. = .0013 $\Rightarrow f_{TURB} = .021$

$$K_K = f\frac{L_K}{D_K} = (.0275)\frac{(4\text{ ft})}{(.674\text{ in})}(12\text{ in/ft}) = 1.96$$

$$K_J = (.021)\frac{(50\text{ ft})}{(1.682\text{ in})}(12\text{ in/ft}) = 7.49$$

CONVERT K_K TO EQUIVALENT VALUE FOR 1½" SCH10 PIPE:

CRANE'S EQ. 3-24: $K'_K = K_K\left(\frac{d_{1\frac{1}{2}}}{d_{\frac{1}{2}}}\right)^4$

$$K'_K = (1.96)\left(\frac{1.682\text{ in}}{.674\text{ in}}\right)^4 = 76.0$$

$$K_{TOTAL} = K_J + K'_K = 83.49$$

NOW APPLY CRANE'S EQ. 3-20: $W = 1891\,Y d^2\sqrt{\frac{\rho\Delta P}{K}}$

$k = 1.4$, $K \approx 84$, $\Delta P/P_1 \approx 1$ $d = 1.682$ in

$\therefore Y \approx .710$ ← SONIC VELOCITY ρ @ $P = 1.5$ ATM & SAT. VAP. = .006708 g/cc = .4188 lb/ft³

$$W = (1891)(.71)(1.682)^2\sqrt{\frac{(.4188\text{ lb/ft}^3)(15\text{ psig})}{83.49}}$$

$$W = 1042\text{ lbs/hr}$$

VERIFY THAT $W = 999$ lb/hr AGREES WITH FRICTION FACTORS USED IN BEGINNING.

$$Re_{1/2''} = 6.31 \frac{W}{d\mu} \qquad \mu \text{ @ } P = 1.7 \text{ ATM}, \; T = 77\text{K}$$

$$Re_{1/2''} = (6.31)\frac{(1042 \text{ lb/hr})}{(.674 \text{ in})(.005651 \text{ cp})} = 1.73 \times 10^6 \Rightarrow f = .026$$

$$Re_{1\frac{1}{2}''} = (6.31)\frac{(1042 \text{ lb/hr})}{(1.682 \text{ in})(.005651 \text{ cp})} = 692{,}000 \Rightarrow f = .02$$

RE-CALCULATE W WITH NEW f's.

$$K_K = (.026)\frac{(4)}{(.674)}(12) = 1.85$$

$$K_J = (.02)\frac{(50)}{(1.682)}(12) = 7.13 \qquad K_{TOTAL} = 78.93$$

$$K'_K = (1.85)\left(\frac{1.682}{.674}\right)^4 = 71.8$$

$$W = (1891)(.71)(1.682)^2\sqrt{\frac{.4188\,(15)}{78.93}} = \underline{1072 \text{ lb/hr}}$$

STEP 2: DETERMINE $\Delta P = P_1 - P_3$ ASSUMING A MASS FLOW OF $W = 1026$ lbs/hr THRU SECTIONS (A) AND (C).

APPLY CRANE'S EQ. 3-14: $\Delta P = 2.8\times10^{-7} \dfrac{KW^2}{\rho d^4}$

FIRST FIND K_1 & $K_{1/2}$ FOR THIS MASS FLOWRATE.

$$Re = 6.31 \frac{W}{d\mu} \quad ; \quad \mu \text{ @ } P = 2 \text{ ATM \& SAT. LIQ.} = .1209 \text{ cp}$$

$$Re_{1''} = (6.31)\frac{(1072 \text{ lbs/hr})}{(1.097 \text{ in})(.1209 \text{ cp})} \approx 51{,}000 \Rightarrow f = .026$$

$$Re_{1/2''} = (6.31)\frac{(1072 \text{ lbs/hr})}{(.674 \text{ in})(.1209 \text{ cp})} \approx 83{,}000 \Rightarrow f = .0275$$

$$K_1 = (.026)\frac{(200 \text{ ft})}{(1.097 \text{ in})}(12 \text{ in/ft}) = 56.9$$

$$K_{1/2} = (.0275)\frac{(300 \text{ ft})}{(.674 \text{ in})}(12 \text{ in/ft}) = 146.9$$

CONVERT $K_{1/2}$ TO EQUIVALENT K FOR 1" SCH 10 PIPE.

$$K'_{1/2} = (146.9)\left(\frac{1.097 \text{ in}}{.674 \text{ in}}\right)^4 = 1031$$

NOW USE CRANE'S EQ. 3-14 FOR ΔP.

$$\Delta P = (2.8\times10^{-7})\frac{(1031)(1026 \text{ lb/hr})^2}{(48.57 \text{ lbs/ft}^3)(1.097 \text{ in})^4} = \boxed{4.3 \text{ psig}}$$

$$\rho = (.778 \text{ g/cc})\left(\frac{62.43 \text{ lb/ft}^3}{1 \text{ g/cc}}\right) = 48.57 \text{ lb/ft}^3$$

SINCE $\Delta P_{1-3} = 4.3$ psig FOR THE MAXIMUM POSSIBLE FLOW THRU THE ½" SCH 10 VENT LINE, WE MUST INCREASE THE SIZE OF THE VENT TO ¾" SCH 10. I'LL TAKE THE SAME APPROACH AND HOPEFULLY $\Delta P_{1-3} = 20$ psig THIS TIME.

1ST GUESS TURBULENT FRICTION FACTORS:

$$f_{1/2''} = .024 \qquad f_{1\frac{1}{2}''} = .021$$

$$K_K = (.024)\frac{(4\,ft)}{(.884)}(12\,in/ft) = 1.30$$

$$K_J = (.021)\frac{(50\,ft)}{(1.682)}(12\,in/ft) = 7.49$$

$$K'_K = (1.30)\left(\frac{1.682}{.884}\right)^4 = 17.0$$

$$K_{TOTAL} = 24.49$$

APPLY CRANE'S EQ. 3-20: $W = 1891\, Y d^2 \sqrt{\frac{\rho \Delta P}{K}}$

$k = 1.4$, $K \approx 24.5$, $\Delta P/P' \approx 1$ $\therefore Y = .710$

$$W = (1891)(.71)(1.682)^2\sqrt{\frac{(.4188)(15)}{(24.5)}} = 1923\ lb/hr$$

CHECK FRICTION FACTORS:

$$Re_{1/2''} = (6.31)\frac{(1923)}{(.884)(.005651)} = 2.43 \times 10^6 \Rightarrow f = .0255$$

$$Re_{1\frac{1}{2}''} = (6.31)\frac{(1923)}{(1.682)(.005651)} = 1.28 \times 10^6 \Rightarrow f = .0205$$

RECALCULATE W WITH NEW f'S :

$$K_K = (.0255)\frac{(4\,ft)}{(.884\,in)}(12\,in/ft) = 1.38$$

$$K_J = (.0205)\frac{(50\,ft)}{(1.682\,in)}(12\,in/ft) = 7.31$$

$$K'_K = (1.38)\left(\frac{1.682}{.884}\right)^4 = 18.1$$

$$K_{TOTAL} = 7.31 + 18.1 = 25.41$$

$$W = (1891)(.71)(1.682)^2\sqrt{\frac{(.4188)(15)}{(25.41)}} = 1889\ lb/hr$$

NOW DETERMINE ΔP_{1-3} USING $W = 1889\ lb/hr$:

$$Re_{1''} = (6.31)\frac{(1889)}{(1.097)(.1209)} = 89{,}900 \Rightarrow f = .0244$$

$$Re_{1/2''} = (6.31)\frac{(1889)}{(.674)(.1209)} = 146{,}000 \Rightarrow f = .026$$

$$K_1 = (.0244)\frac{(200\,ft)}{(1.097\,in)}(12\,in/ft) = 53.4$$

$$K_{1/2} = (.026)\frac{(300\,ft)}{(.674)}(12) = 138.9$$

$$K'_{1/2} = (138.9)\left(\frac{1.682}{.674}\right)^4 = 5{,}387$$

$$K_{TOTAL} = 5{,}387 + 138.9 \approx 5{,}526$$

USE CRANE'S EQ. 3-14 FOR ΔP_{1-3} :

$$\Delta P_{1-3} = (2.8\times10^{-7})\frac{(5{,}526)(1889\ lb/hr)^2}{(48.57\ lb/ft^3)(1.097\,in)} = \boxed{104\ psig}$$

<u>CONCLUSION</u> : THE LN_2 SUPPLY PIPING CAN NEVER PROVIDE THE 3/4" SCH 10 VENT WITH ITS MAXIMUM FLOW.
$\therefore P_{SUBCOOLER}$ WILL ALWAYS BE < 15 psig.

PURPOSE: QUICK CALC. TO DETERMINE ΔP OF GN_2 VENT TO THE LN_2 SUBCOOLER.

GIVEN: WILL ASSUME LINE SIZES FOUND BY RUSS RUCINSKI IN HIS "LN_2/GN_2 LINE SIZING, ΔP'S FOR STEADY STATE" CALC'S ON 5-8-95.

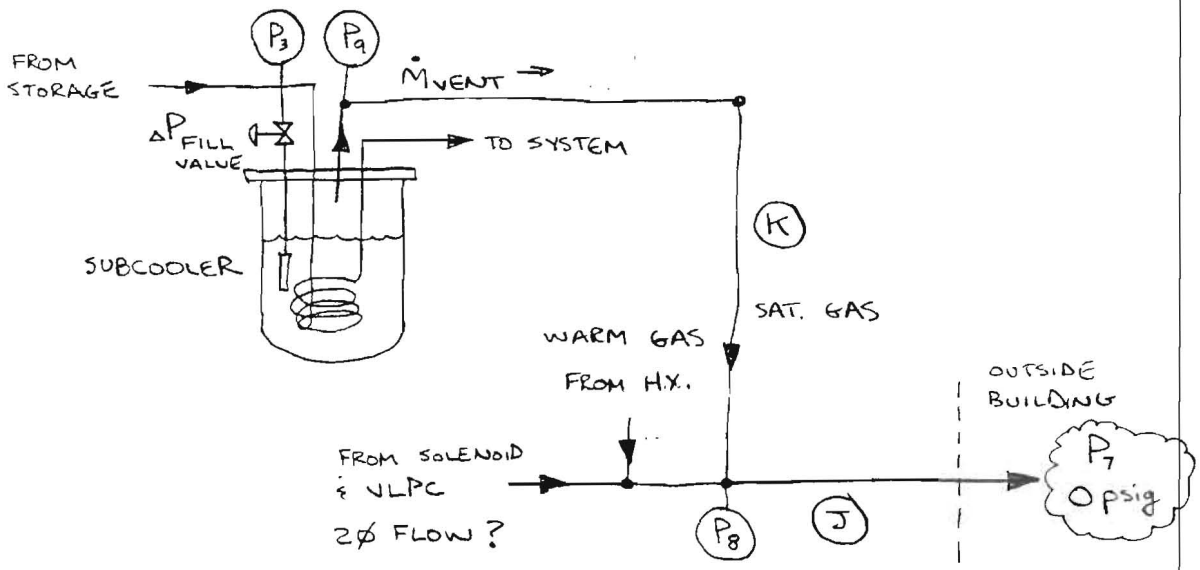

1) $\dot{m}_{VENT}\Big|_{MAX} = 52.5\ g/s = 61.8\ gph\ L$ ← FROM LN_2 SUBCOOLER SIZING CALC'S BY T. LEICHT

OR

2) ASSUME GAS EQUIVALENT TO ~20 gph LIQ. IS ALSO VENTING FROM THE H.X. AND SOLENOID/VLPC BRANCHES. THEN $\dot{M}_J$ = GAS EQUIVALENT OF 81.8 gph.

3) LINE SIZES: (J) 1½" SCH 10 x 3" V.J. x 50 ft

(K) ½" SCH 10 x 1½" V.J. x 12 ft

SOLUTION:

ASSUME SECTION (J) TO ALSO BE SATURATED VAPOR BECAUSE 75% OF THIS GN_2 COMES FROM SUBCOOLER BOILOFF.

N_2 PROPERTIES @ SATURATION:

$P = 1.1$ atm
$T = 78.183$ K
$\rho = .0054$ g/cc
$\mu = .00528$ cp

USING DARCY'S FORMULA (3-14) : $\Delta P = 3.62 \frac{K \rho q^2}{d^4}$

$K = f \frac{L}{D}$ = resistance coeff.

ρ = density [lbs/ft³]

q = flowrate [ft³/s]

d = pipe ID [in]

$Re = 6.31 \frac{W}{d\mu}$; W = flow rate [lbs/hr], μ = viscosity [cp]

$$W = (81.3 \text{ gph})(.805 \text{ g/cc})\left(\frac{8.34 \text{ lb/gal}}{1 \text{ g/cc}}\right) = 550 \text{ lbs/hr}$$

$$Re = (6.31)(550 \text{ lbs/hr}) / (1.682 \text{ in})(.00528 \text{ cp}) = 390{,}780 \text{ TURBULENT !}$$

$\frac{\epsilon}{D} = .001$ THEN, $f = .02$ FROM MOODY DIAGRAM

$$K = f \frac{L}{D} = (.02)\frac{(50 \text{ ft})}{(1.682 \text{ in}/12 \text{ in/ft})} = 7.13$$

DENSITY @ T ≈ 78 K

$$q_J = (81.8 \text{ gph})\left(\frac{1 \text{ hr}}{3600 \text{ s}}\right)\left(\frac{1 \text{ lb}}{.1481 \text{ gal}}\right)\left(\frac{1 \text{ ft}^3}{.31 \text{ lb}}\right) = 0.495 \text{ ft}^3/\text{s}$$

$$\Delta P_J = (3.62)\frac{(7.13)(.00504 \text{ g/cc})\left(\frac{62.43 \text{ lb/ft}^3}{1 \text{ g/cc}}\right)(.495 \text{ ft}^3/\text{s})^2}{(1.682 \text{ in})^4}$$

$$\Delta P_J = P_8 - \cancel{P_7}^{\,0 \text{ psig}} = \underline{0.25 \text{ psi}}$$

NOW FIND PRESSURE DROP FROM P_8 BACK TO THE SUBCOOLER THRU THE ½" PIPE.

$$Re = 6.31 \frac{W}{d\mu}$$

61.8 gph – 208 gph

$$Re = (6.31)(415\ lbs/hr)/(.622\ in)(.00528\ cp)$$

$$Re = 797,358 \Rightarrow f = .02$$

$$K = f\frac{L}{D} = (.02)\frac{(4\ ft)}{(.674\ in)}(12\ in/ft) = 1.42$$

$$q_K = (52.5\ g/s)\left(\frac{1\ lb}{.4536\ kg}\right)\left(\frac{1\ kg}{10^3\ g}\right)\left(\frac{1\ ft^3}{.31\ lb}\right) = .374\ ft^3/s$$

$$\Delta P_K = P_9 - P_8 = 3.62\frac{K\rho q^2}{d^4}$$

$$\Delta P_K = (3.62)\frac{(1.42)(.00504\ g/cc)\left(\frac{62.43\ lb/ft^3}{1\ g/cc}\right)(.374\ ft^3/s)^2}{(.674\ in)^4}$$

$$\Delta P_K = \underline{1.10\ psi}$$

$$P_9 = 0.25\ psig + 1.10\ psig = \underline{1.35\ psig}$$

ok

LN_2 SUBCOOLING

I WONDER WHAT ΔP_K IS DURING STEADY STATE?

$$\dot{m}_{VENT}\Big|_{S.S.} = 3.9\ g/s = 30.96\ lb/hr$$

$$Re = (6.31)(30.96\ lb/hr)/(.622\ in)(.00528\ cp) = 59,485$$

THEN, $f = .024$

$$K = f\frac{L}{D} = (.024)\frac{(4\ ft)}{(.674\ in)}(12\ in/ft) = 1.71$$

$$q_K = (3.9\ g/s)\left(\frac{1\ lb}{.4536\ kg}\right)\left(\frac{1\ kg}{10^3\ g}\right)\left(\frac{1\ ft^3}{.31\ lb}\right) = .0277\ ft^3/s$$

$$\Delta P_K = (3.62)\frac{(1.71)(.00504\ g/cc)\left(\frac{62.43\ lb/ft^3}{1\ g/cc}\right)(.0277\ ft^3/s)^2}{(.674\ in)^4}$$

$$\Delta P_K = \underline{.0072\ psi}$$

CONVERT q's TO SCFM AIR USING IDEAL GAS:

$$\frac{P_1V_1}{P_2V_2} = \frac{\cancel{MR}T_1}{\cancel{MR}T_2} \Rightarrow V_2 = V_1\left(\frac{T_2}{T_1}\right)\left(\frac{P_1}{P_2}\right)$$

$$\dot{V}_2 = (.495\ ft^3/s)\left(60\ \frac{sec}{min}\right)\left(\frac{293\ K}{77\ K}\right)\left(\frac{1.1\ atm}{1.0\ atm}\right) = 124.3\ scfm\ N_2$$

$$\dot{V}_2 = (124.3\ scfm\ N_2)\sqrt{\frac{1}{(.9669)}} = 126.4\ scfm\ AIR$$

$$\dot{V}_2 = (.374\ ft^3/s)(60)\left(\frac{293}{77}\right)\left(\frac{1.1}{1.0}\right) = 93.3\ scfm\ N_2$$

$$= (93.3)\sqrt{1/.9669} = 94.9\ scfm\ AIR$$

$$\dot{V}_2 = (.0277\ ft^3/s)(60)\left(\frac{293}{77}\right)\left(\frac{1.1}{1.0}\right) = 6.96\ scfm\ N_2$$

$$= (6.96)\sqrt{1/.9669} = 7.08\ scfm\ AIR$$

PURPOSE: DETERMINE VENTING REQUIREMENTS AND MAXIMUM PRESSURE OF THE LN_2 SUBCOOLER/ GHe HEAT EXCH.

DEF. "PRESSURE VESSEL" - ANY VESSEL FALLING WITHIN THE

ANY VESSEL FALLING WITHIN THE SCOPE OF ASME SECTION VIII DIV. 1&2. U-1.c.8 DOES NOT CONSIDER ANY VESSEL HAVING AN INTERNAL OPERATING PRESSURE <15 psi TO BE A PRESSURE VESSEL. WE WILL TRY TO SIZE THE VENT PIPING ACCORDINGLY.

LOSS OF VACUUM: (SEE ES&H 5032.1TA)

MIN. REQ'D CAPACITY: $Q_a = \frac{(130-t)}{4(1200-t)} G_i U A$

Q_a = FLOW CAPACITY [ft^3/min FREE AIR]

U = TOTAL THERMAL CONDUCTANCE [$Btu/hr \cdot ft^2 \cdot °F$]

IT IS DETERMINED WHEN INSULATION IS SATURATED WITH GASEOUS LADING OR AIR AT ATM. & 100 °F.

$U = \frac{\text{THERMAL CONDUCTIVITY OF INSULATION}}{\text{THICKNESS OF INSULATION}} = \frac{k}{X}$

A = OUTSIDE SURFACE AREA OF INNER VESSEL [ft^2]

G_i = GAS FACTOR FROM TABLE 1 OF CGA S-1.3

t = TEMPERATURE AT FLOWING CONDITIONS [°F]

PROPERTIES: CODE REQUIRES P=1ATM & T=100°F OR T_{AVG} TO DETERMINE INSULATION PROPERTIES. WILL USE T_{AVG} BECAUSE IT IS MORE APROPRIATE IN THIS CASE.

$T_{AVG} = (T_{LN_2} + T_{ROOM})/2 = \frac{77K + 300K}{2} = 188.5\ K = -120.4\ °F$

NITROGEN: k = .01757 W/m·K

AIR @ P=1ATM: k = .0171 W/m·K, .00988 Btu/hr·ft·°F

M.V.E J-1 DEWAR
W/ B-STYLE FLANGE

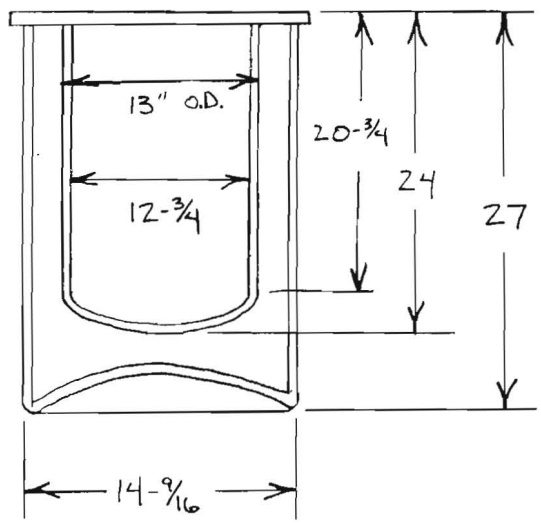

* ASSUME AVG. INSULATION THICKNESS, $x = 3/8$ in

t = TEMP. @ FLOWING CONDITIONS [°F]

$t = 77\ K = -320\ °F$

$G_i = 10.2$ FROM TABLE 1 OF CGA S-1.3

HEMISPHERE

$$A = \pi D h + \frac{1}{2}(\pi D^2)$$

$$A = \pi(13'')(20.75'') + \frac{1}{2}\pi(13'')^2 = 1113\ in^2 = 7.73\ ft^2$$

USE K_{N_2} BECAUSE $K_{N_2} > K_{AIR}$:

$$Q_a = \frac{(130-(-320))}{4(1200-(-320))}(10.2)\frac{(.01015)}{(.375)}(7.73)$$

$$\boxed{Q_a = 0.158 \text{ scfm AIR}}$$

FIRE CONDITION :

MINIMUM CAPACITY : $Q_a = G_i U A^{0.82}$

* U IS DETERMINED @ $T = 100°F = 311\ K$

NITROGEN @ $P = 29.7$ psia : $k = .02652\ W/m \cdot K$; $k = .0153\ Btu/hr \cdot ft \cdot °F$

AIR @ $P = 1$ ATM : $k = .0271\ W/m \cdot K$; $k = .0157\ Btu/hr \cdot ft \cdot °F$

USE k_{AIR} SINCE $k_{AIR} > k_{N_2}$ IN THIS CASE.

A = WETTED SURFACE AREA

$$A = \pi(12.75)(10) + \tfrac{1}{2}\pi(12.75)^2$$

$$A = 656\ in^2 = 4.55\ ft^2$$

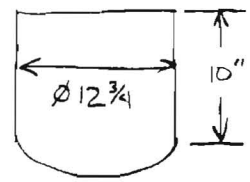

10" IS AVG. OPERATING LIQUID LEVEL

$$Q_a = (10.2)\frac{(.0157)}{(.375)}(4.55)^{0.82}$$

$$\boxed{Q_a = 1.48\ scfm\ AIR}$$

$\approx 1.51\ ft^3/min\ GN_2$ @ STP

THE TWO CAPACITIES CALCULATED ABOVE WILL ADD TO THE NORMAL LN_2 BOILOFF DURING ONE OF THE TWO FAILURE MODES (LOSS OF VACUUM, FIRE). THE WORST POSSIBLE COMBINATION OF GHe COOLDOWN, $\dot{m} = 52.5\ g/s$, AND EXTERNAL FIRE, $Q_a = 1.48\ ft^3/min$, WILL YIELD THE HIGHEST FLOW RATE OF LN_2 BOILOFF THRU THE VENT LINE AND WILL CAUSE THE LARGEST ΔP FROM P_9 TO P_7 (SEE SCHEMATIC ON P. 1). I WILL NOW RE-CALCULATE THIS ΔP.

$$q_J = .495\ ft^3/s + \left(1.51\ ft^3/min\right)\overbrace{\left(\frac{1}{60\ \frac{min}{sec}}\right)\left(\frac{77\ K}{293\ K}\right)\left(\frac{1.0\ ATM}{1.1\ ATM}\right)}^{\text{CONVERT TO 77K \& 1.1 ATM}} = .501\ ft^3/s$$

$$\Delta P_J = P_8 - \cancel{P_7}^{\,0psig} = (3.62)\frac{(7.13)(.00504\ g/cc)\left(\frac{62.43\ lb/ft^3}{1\ g/cc}\right)(.501\ ft^3/s)^2}{(1.682\ in)^4}$$

$$\Delta P_J = P_8 = 0.25\ psig$$

$$q_K = .374\ ft^3/s + (1.51\ scfm)\left(\frac{1}{60}\right)\left(\frac{77}{293}\right)\left(\frac{1.0}{1.1}\right) = .380\ ft^3/s$$

$$\Delta P_K = P_9 - P_8 = (3.62)\frac{(1.42)(.00504\ \delta/cc)\left(\frac{62.43\ lb/ft^3}{1\ \delta/cc}\right)(.38\ ft^3/s)^2}{(.674\ in)^4}$$

$$\Delta P_K = 1.13\ psig$$

THEN, $P_9 = \Delta P_J + \Delta P_K = .25\ psig + 1.13\ psig$

$$\underline{P_9 = 1.38\ psig}$$

<u>NOTE</u>: THE ES&H MANUAL SUGGESTS AN EQUATION FOR MINIMUM CAPACITY FOR FIRE CONDITION OF THE FORM:

$$Q_9 = (10.2)\left(\frac{.058}{X}\right)A^{0.82}$$

WHERE $K = .058$ Btu/hr·ft·°F. THIS SHOULD YIELD A CAPACITY ~5 TIMES GREATER THAN I PREDICTED. IT WOULD BE NICE TO KNOW IF $(\Delta P_K + \Delta P_J) < 15$ psi USING THIS EQUATION.

$$Q_9 = (10.2)\left(\frac{.058}{.375}\right)(41.55)^{0.82} = 5.46\ scfm\ AIR \approx 5.55\ scfm\ N_2$$

$$q_J = .495\ ft^3/s + (5.55)\left(\frac{1}{60}\right)\left(\frac{77}{293}\right)\left(\frac{1.0}{1.1}\right) = .517\ ft^3/s$$

$$\Delta P_J = (3.62)\frac{(7.13)(.00504\ \delta/cc)\left(\frac{62.43\ lb/ft^3}{1\ \delta/cc}\right)(.517\ ft^3/s)^2}{(1.682\ in)^4}$$

$$\Delta P_J = P_8 = .27\ psig$$

$$q_K = .374\ ft^3/s + (5.55\ scfm)\left(\frac{1}{60}\right)\left(\frac{77}{293}\right)\left(\frac{1.0}{1.1}\right) = .396\ ft^3/s$$

$$\Delta P_K = (3.62)\frac{(1.42)(.00504\ g/cc)\left(\frac{62.43\ lb/ft^3}{1\ g/cc}\right)(.396\ ft^3/s)^2}{(.674\ in)^4}$$

$\Delta P_K = 1.23$ psi

THEN, $P_q = \Delta P_J + \Delta P_K = .27$ psi + 1.23 psi

$\underline{P_q = 1.50\ psig}$ THIS IS MORE CONSERVATIVE THAN CGA.

NOTE: THIS ΔP_J IS FROM RUSS' S.S. LINE SIZING CALC'S.

SUMMARY OF STEADY STATE WITH FAILURE MODES:

		Q_a, scfm air	ΔP_J, psi	ΔP_K, psi	P_{VESSEL}, psig
	STEADY STATE:				
1	LN_2 SUBCOOLING	7.08	.15	.0072	.16
	GHe H.X.	94.9	.25	1.10	1.35
	LOSS OF VACUUM:				
2	LN_2 SUBCOOLING	7.24	—	—	—
	GHe H.X.	95.1	—	—	—
	EXTERNAL FIRE:				
3	LN_2 SUBCOOLING	8.56	—	—	—
	GHe H.X.	96.4	.27	1.23	1.50

NOTE: Q_a IS FLOW CAPACITY IN SECTION (K). SEE FIGURE 1 ON FIRST PAGE.