SCAFFOLDING PLATFORM: AT MUON CHAMBER

D0 Engineering Note: 3740.000-EN-429

Andrew Kuwazaki
RD/D0 Mechanical Group

Approved by:

ID # 8351

RUSSELL A. RUCINSKI

SUMMARY

The design for the scaffolding platform(Fig. 1) which will be connected to the muon chamber wall was analyzed for a load rating of 400 lbs. The platform is supported on each end and the calculations were done for the full 400 lbs. on the end of the horizontal beam. Both members were analyzed for maximum stresses and were compared to the allowable stress, and both members were found to be acceptable in accordance with the ASCE and AISC specifications. The only recommendation is for all the 3/8" steel bolt to be of grade 5 or better. This is necessary to insure safety.

PLATFORM ANALYSIS SUMMARY

ITEM	MAX. STRESS CALC. (ksi)	CODE ALLOWABLE STRESS (ksi)	RATIO MAX. STRESS/ ALLOWABLE < 1.0
BEAM 1			
Compression	4.067	10.86	0.375
Tension	4.333	26.0	0.167
BEAM 2			
Compression	1.22	~~19.0~~ 3.54	~~0.07~~ .34
Tension	.802	19.0	0.04
BOLTS (GRADE 5)			
1	29.0	85	0.34
2	32.4	85	0.38
3	5.1	85	0.06
4	29.0	85	0.34
5	32.4	85	0.38

* The scaffolding load rating is 500 lbs.

FERMILAB ENGINEERING NOTE	SECTION	PROJECT	SERIAL-CATEGORY	PAGE
	RD/DØ		3740-000	1

SUBJECT	NAME	
SCAFFOLDING PLATFORM CONNECTED TO MUON CHAMBER	ANDY KUWAZAKI	
	DATE 7/28/95	REVISION DATE

CHECKED 8-1-95 R. RUCINSKI

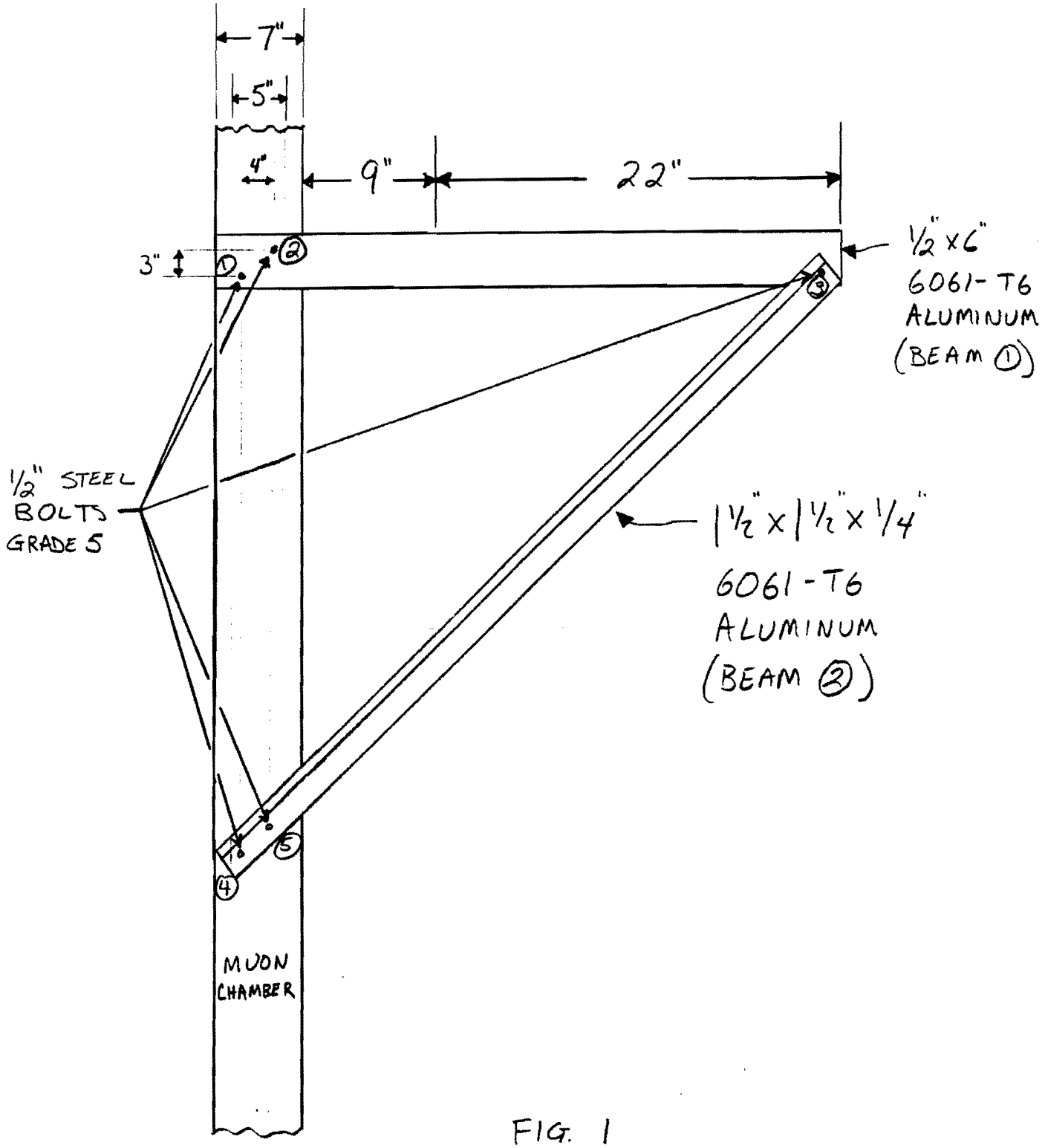

FIG. 1

FERMILAB ENGINEERING NOTE	SECTION	PROJECT	SERIAL-CATEGORY	PAGE
	RD/DØ		3740-000	2

SUBJECT	NAME	
SCAFFOLDING PLATFORM CONNECTED TO MUON CHAMBER	ANDY KUWAZAKI	
	DATE 7/28/95	REVISION DATE

Checked 8/1/95

WORST CASE: BEAM ①

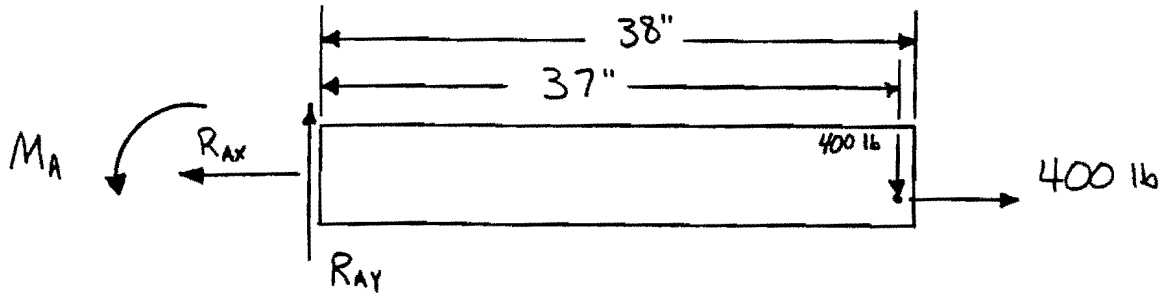

$R_{AY} = 400$ lb

$R_{AX} = 400$ lb

$M_A = 400\text{ lb}(37'')$

$M_A = 14{,}800$ lb-in

BOLTS FOR BEAM ①

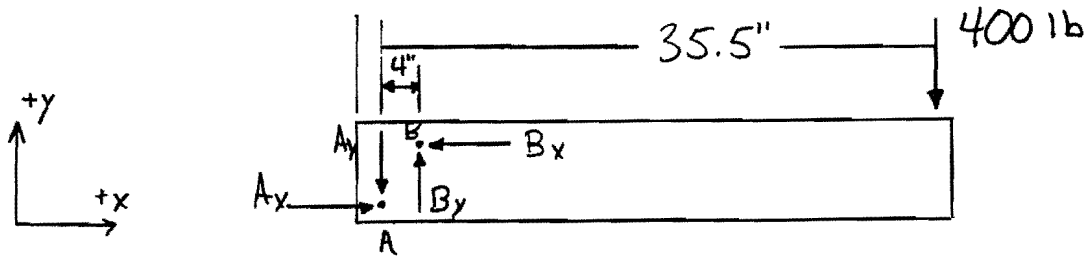

FOR SIMPLICITY SAY:

$A_x = B_x = 400$ lb

$\circlearrowleft + \Sigma M_A = 0$ (ASSUME $B_x = 0$)

$400\text{ lb}(35.5\text{ in}) - B_y(4\text{ in}) = 0$

$$\boxed{B_y = 3550\text{ lb}}$$

SUBJECT: SCAFFOLDING PLATFORM CONNECTED TO MUON CHAMBER

NAME: ANDY KUWAZAKI

DATE: 7/28/95 | REVISION DATE:

CHECKED. 8-1-95

$$+\uparrow \Sigma F_y = 0$$

$$-400\text{ lb} + B_y - A_y = 0$$

$$A_y = -400\text{ lb} + 3550\text{ lb}$$

$$\boxed{A_y = 3150\text{ lb}}$$

SHEAR FORCE AND MOMENT DIAGRAM

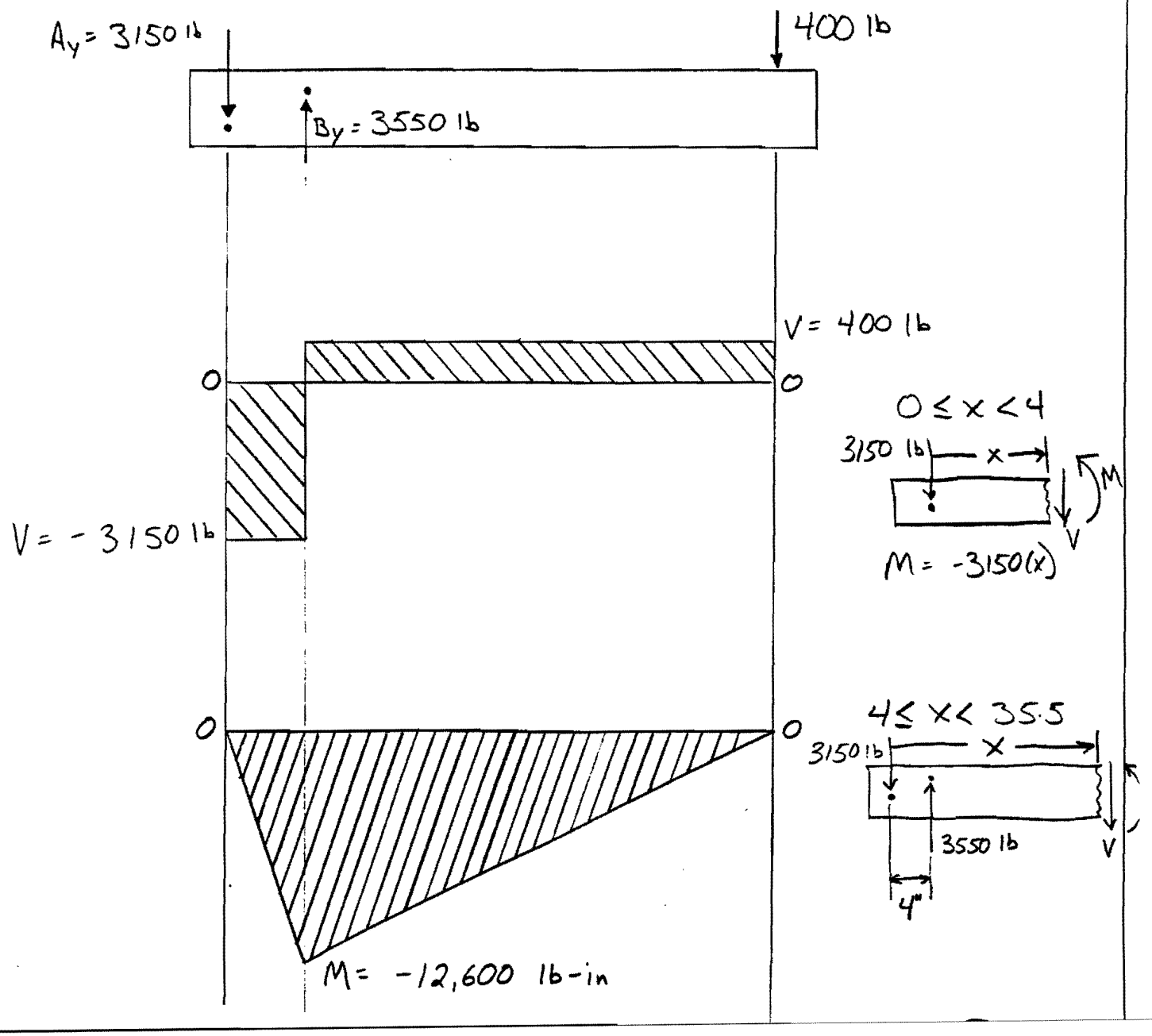

SUBJECT: SCAFFOLDING PLATFORM CONNECTED TO MUON CHAMBER

NAME: ANDY KUWAZAKI

DATE: 7/28/95 | REVISION DATE:

Checked: 8-1-95

BEAM ①

(TABLE 4b)

SLENDERNESS LIMIT

(REF. REYNOLD'S ALUMINUM p. 43 IN BLUE SECTION)

$$S_1 = \frac{d}{t}\sqrt{\frac{L_b}{d}} = 11 \quad ; \quad S_2 = 29$$

$d \equiv$ LENGTH OF CROSS SECTION (IN)

$t \equiv$ THICKNESS (IN)

$L_b \equiv$ LENGTH OF BEAM (IN)

$$S_{CALC.} = \frac{6\text{ in}}{.5\text{ in}}\sqrt{\frac{38\text{ in}}{6\text{ in}}} \approx 30.2$$

SINCE:

$$S_{CALC} > S_2 > S_1$$

THEN:

$$\sigma_{ALLOW} = \frac{9{,}900}{\left(\frac{d}{t}\right)^2 \frac{L_b}{d}} = \frac{9{,}900}{\left(\frac{6}{.5}\right)^2 \frac{38}{6}} = 10.86 \text{ ksi}$$

$\sigma_{ALLOW_C} = 10.86$ ksi (COMPRESSION IN BENDING)

$\sigma_{ALLOW_T} = 26$ ksi (TENSION)

SUBJECT: SCAFFOLDING PLATFORM CONNECTED TO MUON CHAMBER

NAME: ANDY KUWAZAKI

DATE: 7/28/95 | REVISION DATE:

Checked. 8-1-95

TENSION & COMPRESSION LOADS FOR BEAM ①

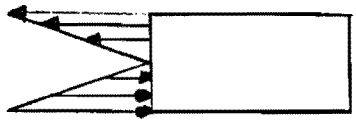

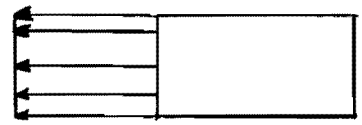

$$\frac{Mc}{I} = \frac{(12{,}600 \text{ lb-in})\ 3\text{in}}{\frac{1}{12}\cdot\frac{1}{2}\cdot 6^3}$$

$$\frac{Mc}{I} = 4.2 \text{ ksi}$$

$$\frac{F}{A} = \frac{400 \text{ lb}}{(\frac{1}{2})\ 6''}$$

$$= 133.3 \text{ psi}$$

4.333 ksi

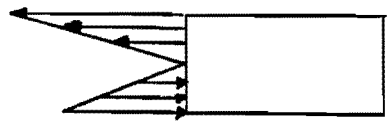

4.067 ksi

RATIO OF MAX STRESS CALC. / ALLOWABLE

$$R_C = \frac{4.067 \text{ ksi}}{10.86 \text{ ksi}} = .375 \quad \text{(COMPRESSION RATIO)}$$

$$R_T = \frac{4.333 \text{ ksi}}{26 \text{ ksi}} = .167 \quad \text{(TENSION RATIO)}$$

BOTH RATIOS ARE LESS THAN 1. THUS BEAM ① IS ACCEPTABLE UNDER THE PRESCRIBED 400 lb LOAD.

SUBJECT: SCAFFOLDING PLATFORM CONNECTED TO MUON CHAMBER

NAME: ANDY KUWAZAKI

DATE: 7/28/95 | REVISION DATE:

CHECKED: RUSS RUCWSKI 8-1-95

BEAM ②: FOLLOW EXAMPLE 2, p. 38 OF "STRUCTURAL ALUM. DESIGN" REYNOLDS ALUM. 1968.

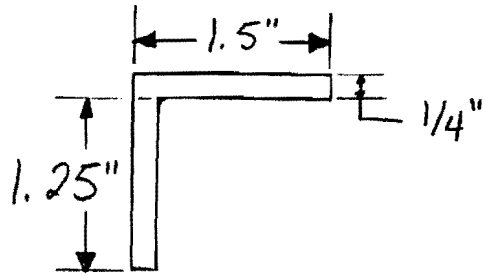

$A = .6875\ in^2$

$r_x = .449\ in$

$L = 53.75\ in$

$I = .14\ in^4$

SLENDERNESS RATIO:

$$\frac{L}{r} = \frac{53.75\ in}{.449\ in} = 119.7 \approx 120$$

TABLE 4b SHOWS ALLOWABLE STRESS FOR SLENDERNESS RATIO GREATER THAN 67:

$$f_{ALLOW} = \frac{51000\ ksi}{(L/r)^2} = \frac{51000\ ksi}{(53.75in/.449in)^2} = 3.542\ ksi$$

FOR COMPRESSION OF A COLUMN

ACTUAL STRESS IS:

$$\frac{P}{A} = \frac{400\ lb}{.6875\ in^2} = 581.8\ psi$$

THE ALLOWABLE STRESS IN THE LEG OF THE ANGLE MUST BE CHECKED. THE SLENDERNESS RATIO IS:

$$\frac{b}{t} = \frac{1.25\ in}{.5\ in} = 5$$

FOR A SLENDERNESS RATIO BELOW 5.5, THE ALLOWABLE STRESS IS:

$$f_{ALLOW} = 19\ ksi$$

SINCE 19 ksi > 3.54 ksi, LOCAL BUCKLING IS NOT CRITICAL.

SUBJECT: SCAFFOLDING PLATFORM CONNECTED TO MUON CHAMBER

NAME: ANDY KUWAZAKI

DATE: 7/28/95 | REVISION DATE:

CHECKED, RUSS RUCINSKI 8-1-95

WORST CASE: BEAM ②

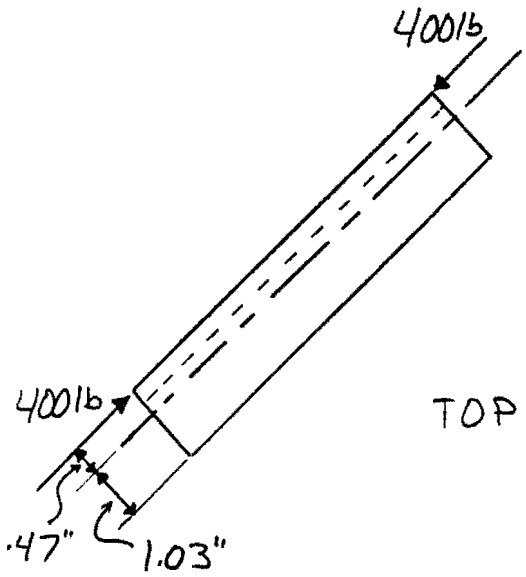

MOMENTS DUE TO ECCENTRIC LOAD

$$M_c = (400\ \text{lb})(.47\ \text{in}) = 188\ \text{lb-in}$$

$$\sigma_{b\,\text{COMPRESS}} = \frac{Mc}{I} = \frac{(188\ \text{lb-in})(.47\ \text{in})}{.14\ \text{in}^4}$$

$$\sigma_{b\,\text{TENSION}} = \frac{Mc}{I} = \frac{(188\ \text{lb-in})(1.03\ \text{in})}{.14\ \text{in}^4}$$

$$\boxed{\sigma_{b\,\text{COMPRESS}} = 631\ \text{psi}}$$

$$\boxed{\sigma_{b\,\text{TENSION}} = 1.4\ \text{ksi}}$$

$$\sigma_{b\,\text{COMPRESS}} + \frac{P}{A} = 631\ \text{psi} + \frac{400\ \text{lb}}{.6875\ \text{in}^2} = 1.22\ \text{ksi}$$

$$\sigma_{b\,\text{TENSION}} - \frac{P}{A} = 1.4\ \text{ksi} - \frac{400\ \text{lb}}{.6875\ \text{in}^2} = 802\ \text{psi}$$

SUBJECT: SCAFFOLDING PLATFORM CONNECTED TO MUON CHAMBER

NAME: ANDY KUWAZAKI

DATE: 7/28/95 | REVISION DATE:

Checked: 8-1-95

RATIO OF MAX STRESS CALC. / ALLOWABLE

$\sigma_{ALLOW} = 3.542$ Ksi, COMPRESSION, 19.0 Ksi TENSION.

$$R_C = \frac{1.22 \text{ Ksi}}{3.542 \text{ Ksi}} = .34$$

$$R_T = \frac{.802 \text{ Ksi}}{19 \text{ Ksi}} = .04$$

BOTH RATIOS ARE LESS THAN 1. THUS, BEAM ② IS ACCEPTABLE UNDER THE 400 lb LOAD.

BOLT SIZE FOR BOLT ② AND ⑤

SHEAR OF 3550 lb MAX ↑
400 lb MAX ←

$$V_{MAX} = \sqrt{(3550 \text{ lb})^2 + (400 \text{ lb})^2} = 3572 \text{ lb}$$

WITH 3/8" BOLT:

$$A = \frac{\pi D^2}{4} = 0.11045 \text{ in}^2$$

$$\tau_{AVG} = \frac{3572 \text{ lb}}{0.11045 \text{ in}^2} = 32.4 \text{ ksi}$$

ACCORDING TO TABLE 8.2.26, FOR A STEEL BOLT WITH GRADE 5, TYPE A449 OR A325, THE ALLOWABLE STRESS IS 85 ksi. (REF. MARK'S HANDBOOK, p. 8-30)

SUBJECT: SCAFFOLDING PLATFORM CONNECTED TO MUON CHAMBER

NAME: ANDY KUWAZAKI

DATE: 7/31/95 | REVISION DATE:

Checked [illegible] 8-1-95

BOLT SIZE FOR BOLT ① AND ④

SHEAR OF 3150 lb MAX ↑
400 lb MAX ←

$$V_{MAX} = \sqrt{(3150\ lb)^2 + (400\ lb)^2} = 3175\ lb$$

WITH 3/8" BOLT:

$$A = .11045\ in^2$$

$$\tau_{AVG} = \frac{3175\ lb}{.11045\ in^2} = 29\ ksi$$

BOLT SIZE FOR BOLT ③

SHEAR OF 400 lb MAX ↑
400 lb MAX ←

$$V_{MAX} = \sqrt{(400\ lb)^2 + (400\ lb)^2} = 565.7\ lb$$

$$A = .11045\ in^2$$

$$\tau_{AVG} = \frac{565.7\ lb}{.11045\ in^2} = 5.1\ ksi$$

checked 8-1-95

MINIMUM EDGE DISTANCE:

A 1/2" NOMINAL BOLT DIAMETER REQUIRES A MINIMUM EDGE DISTANCE OF 7/8". AS THE NOMINAL DIAMETER INCREASES, THIS MIN. EDGE DISTANCE INCREASES. THEREFORE, A 3/8" BOLT WITH AN EDGE DISTANCE OF 1" WILL BE SUFFICIENT.

CONCLUSION:

THIS PROPOSED DESIGN WILL BE SUFFICIENT FOR A 400 lb LOAD. ALL THE BOLTS USED ARE RECOMMENDED TO BE 3/8" STEEL BOLTS OF GRADE 5. ALTHOUGH THE BOLT CONNECTING THE TWO BEAMS NEEDS TO SUPPORT ONLY 5 KSI, I RECOMMEND THAT ALL 5 BOLTS BE THE SAME.