CRYOGENIC LINES: AT REFRIGERATOR

Thermal Contraction Analysis of Four Cryogenic Utility Lines for the D0 Upgrade

D0 Engineering Note: 3823.115-EN-426
June 23, 1995

Andrew Kuwazaki
RD/D0 Mechanical Group

Approved by:

SUMMARY

The cryogenic lines GHE and LN2 contain two lines each, one for supply and the other for return. The tubing was stress analyzed per ASME code for pressure piping, standard ANSI/ASME B31.3. A commercial pipe stress analysis and design system by ALGOR® was used for the analysis along with the calculated maximum stress, 25,050 psi. They were all analyzed for combined pressure, thermal movement, and dead weight and all the stresses were below this allowable stress limit. There are sections of the transfer lines that will be increased from a 1-1/2" vacuum jacket to a 2" vacuum jacket. This increase accounts for the maximum displacement, 0.466" in troubled areas as seen in subsequent drawings. The greatest displacement allowed for a 1-1/2" vacuum jacket is 0.421" for a 1/2" pipe on the nominal centerline. The greatest displacement allowed for a 2" vacuum jacket is 0.658". We will have a clearance of 0.192" when using the 2" vacuum jacket.

Thermal Contraction Analysis of Solenoid and VLPC Cryogenic Transfer Lines for D0 Upgrade.

SUMMARY CHART

	Maximum Hoop Stress (psi)	*Maximum Longitudinal Stress (psi)*	*Maximum Prinicpal Stress (psi)*	*Maximum Code Stress (psi)*	*Allowable Stress (psi)*	*Maximum X Displacement (inches)*	*Maximum Y Displacement (inches)*	*Maximum Z Displacement (inches)*
GHE Cooldown Supply (Fig. 1)	1631 (at START)	6975 (at point G)	6991 (at point G)	7468 (at point G)	25,050	0.446 (at point G)	0.161 (at point C)	0.234 (at point G)
GHE Cooldown Return (Fig. 2)	699 (at START)	7112 (at point E)	7112 (at point E)	7855 (at point D)	25,050	0.000	0.163 (at point D)	0.422 (at point D)
GHE Cooldown Return (Fig. 3)	699 (at START)	5331 (at point K)	5332 (at point K)	5689 (at point K)	25,050	0.404 (at point K)	0.142 (at point K)	0.259 (at point C)

* Information is only provided for the GHE cooldown supply and return, because the two LN2 lines have similar geometric shape. Since the geometry is similar, the displacements and stresses are similar also.

ANALYSIS

An approximation of length was used to determine the geometry of the piping and a flexibility analysis provided an approximation for displacements along each section of piping. All drawings were done in left hand coordinate system, but this system is used consistently throughout. It does not effect the validity of the calculations, i.e. stress levels or displacements. The program ALGOR® was used to place spider guides along the pipes. The analysis concerning the spider guides was only necessary for the GHE cooldown supply and return, because the two LN2 lines have similar geometric shape. Since the geometry is similar, the displacements and stresses are similar.

Two alternative methods for the piping were found during the analysis. The first method is to increase the vacuum jacket size from 1-1/2" to 2". This will allow for maximum displacement without contact between the cryogenic lines and the vacuum jacket. The second method is to install the cryogenic lines at an offset from the vacuum jacket centerline so that during steady state cold operation, the cryogenic lines will be in a proper location. In addition to proper location, the offset will allow a higher clearance. For example, if the cryogenic line is offset by 0.25", the clearance for the maximum displacement would be 0.20".

RECOMMENDATIONS

The method which increases the vacuum jacket to a 2" pipe size appears preferable when compared to the 0.25" offset of the cryogenic lines, but both methods are nearly equal in increasing the amount of clearance. When implementing these two methods simultaneously, the maximum amount of clearance increases to 0.442" for a 1/2" pipe on the nominal centerline.

The spider guides should also be placed as closely as possible to the designated areas as seen in both the analysis and the drawings.

FERMILAB ENGINEERING NOTE	SECTION RD/DØ	PROJECT	SERIAL-CATEGORY 3823-115	PAGE 1
SUBJECT: FLEXIBILITY ANALYSIS FOR DØ UPGRADE			NAME: ANDY KUWAZAKI	
			DATE: 6/8/95	REVISION DATE

GHe COOLDOWN SUPPLY "A"

(NOT TO SCALE)

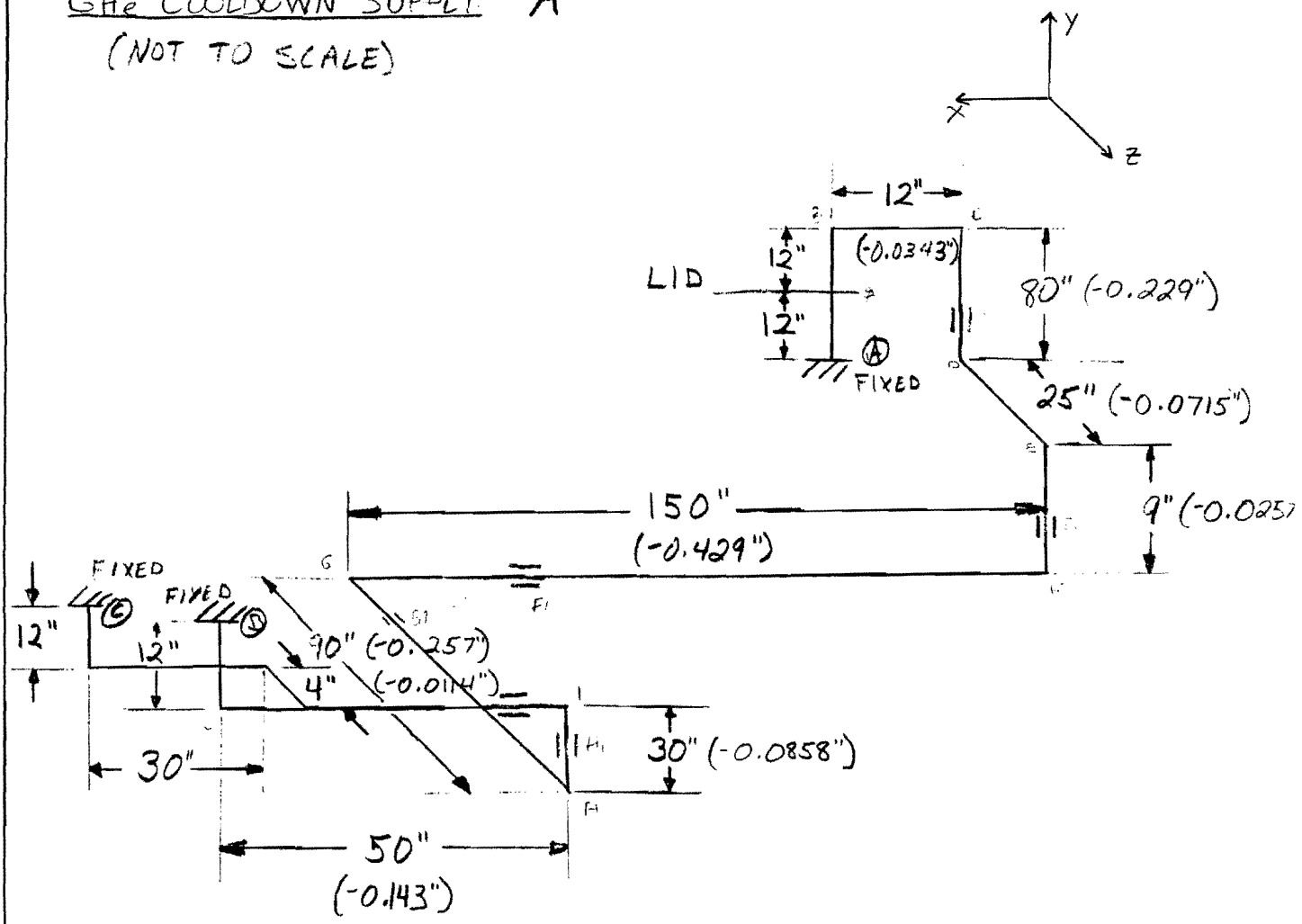

FOR AN APPROXIMATION OF THE RELATIVE FLEXABILITY,

IF $\dfrac{DY}{U^2(R-1)^2} \leq 0.03$ THEN THE PIPPING IS FLEXABLE ENOUGH THAT FURTHER ANALYSIS IS NOT REQ'D.

D = NOMINAL PIPE SIZE, in.

Y = RESULTANT OF RESTRAINED THERMAL EXPANSION + NET LINEAR TERMINAL DISPLACEMENTS, in

U = ANCHOR DISTANCE, ft

R = RATIO L/U

SUBJECT: FLEXIBILITY ANALYSIS FOR DØ UPGRADE

NAME: ANDY KUWAZAKI

DATE: 6/9/95 | REVISION DATE:

CASE A

LINE AB WOULD BE THE LEAST FLEXIBLE SO I WILL ANALYZE IT.
IF IT IS O.K. LINE AC WILL BE O.K.

$D = 0.5$

$L = 482.0 \text{ IN.} = 40.17 \text{ Ft}$

$U = \sqrt{188^2 + 23^2 - 115^2} = 221.6 \text{ in} = 18.5 \text{ Ft}$

$R = L/U = 40.17/19.3 = 2.18$

CONTRACTION & TERMINAL DISPLACEMENTS

X DIRECTION: $188(0.00286) = 0.538$ IN

Y DIRECTION: $23(0.00286) = 0.066$ IN.

Z DIRECTION: $115(0.00286) = 0.329$ IN.

$$Y = \sqrt{(0.538)^2 + (0.066)^2 + (0.329)^2} = 0.634 \text{ IN.}$$

SUBSTITUTE & CHECK W/EQ

$$\frac{DY}{U^2(R-1)^2} = \frac{0.5(0.634)}{(18.5)^2(2.18-1)^2} = 0.0007 < 0.03$$

→ FLEXIBILITY FOR CASE A IS O.K. BUT NUMBER SEEMS A LITTLE LOW.

ALLOWABLES:

CALCULATE ALLOWABLE DISPLACEMENT STRESS RANGE S_A, PER. ANSI 302.3.5.

ANSI/ASME B31.3-1984 TABLE A-1

ALLOWABLE STRESS: $SE_{304 \text{ S.S.}} = 16.7$ Ksi

ABOVE VALID FOR $-425°F < T < 100°F$

MIN. YIELD STRESS: $\sigma_{y\,min} = 30$ Ksi

$$S_A = f(1.25 S_c + 0.25 S_h)$$

$$S_A = 1.0 \cdot (1.25(16.7 \text{ Ksi}) + 0.25(16.7 \text{ Ksi}))$$

$$\boxed{S_A = 25.05 \text{ Ksi}}$$

SUBJECT: FLEXIBILITY ANALYSIS FOR DØ UPGRADE

NAME: ANDY KUWAZAKI

DATE: 6/9/95 | REVISION DATE:

GHe COOLDOWN RETURN
(NOT TO SCALE)

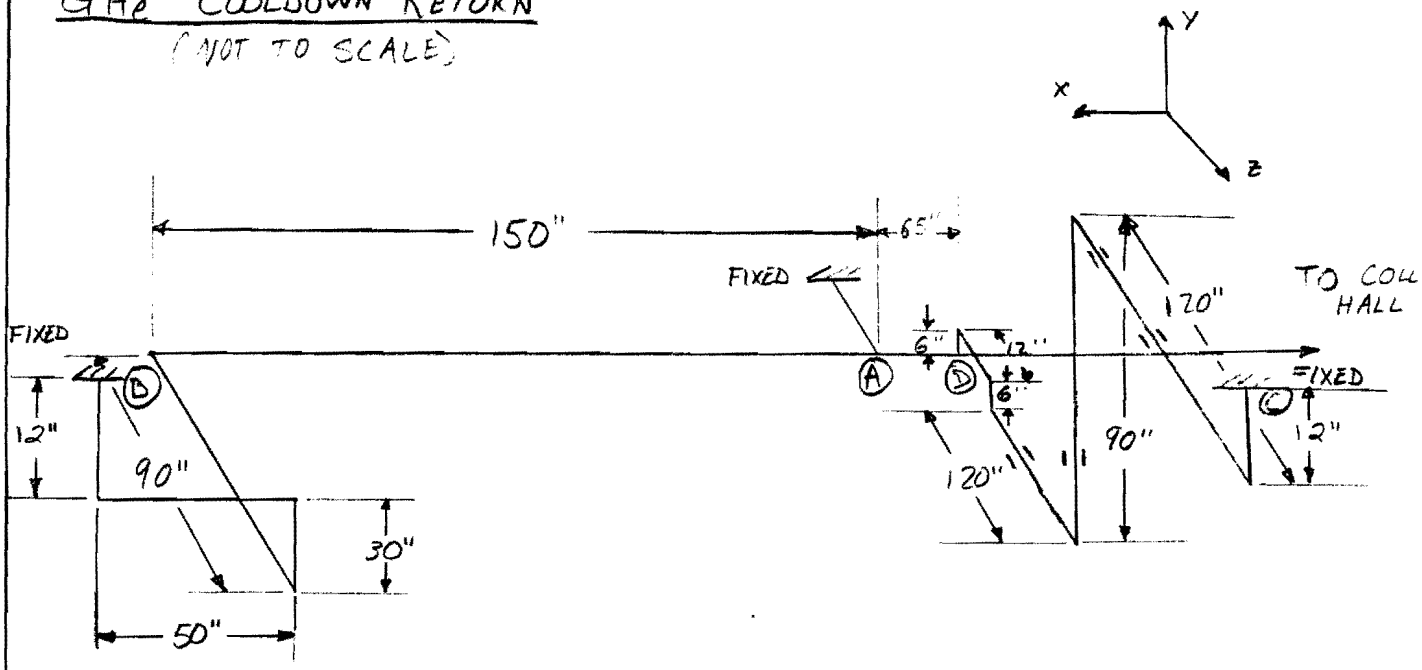

CASE I

I WILL LOOK AT LINE AB FIRST SINCE IT SEEMS TO BE THE MOST RIGID. IF LINE AB IS O.K., THEN I WILL CHECK LINE DC.

$D = 0.5$ IN.

$L = 332$ IN. $= 27.7$ Ft

$U = \sqrt{(200)^2 + (42)^2 + (90)^2} = 223$ IN. $= 18.6$ Ft

$R = L/U = 27.7/18.6 = 1.49$

CONTRACTION & TERMINAL DISPLACEMENTS

X DIRECTION: $200(0.00286) = 0.572$ IN.

Y DIRECTION: $42(0.00286) = 0.12$ IN.

Z DIRECTION: $90(0.00286) = 0.257$ IN.

$$Y = \sqrt{(0.572)^2 + (0.12)^2 + (0.257)^2} = .639 \text{ IN}$$

SUBSTITUTE & CHECK W/EQ

$$\frac{DY}{U^2(R-1)^2} = \frac{0.5(.639)}{(18.6)^2(1.49-1)^2} = 0.004 < 0.03$$

→ FLEXABILITY FOR CASE I IS O.K.

SUBJECT: FLEXIBILITY ANALYSIS FOR DØ UPGRADE

NAME: ANDY KUWAZAKI

DATE: 6/9/95 | REVISION DATE:

CASE 2

I WILL NOW CHECK LINE DC.

$D = 0.5$ IN.

$L = 366$ IN $= 30.5$ FT

$U = \sqrt{(0)^2 + (102)^2 + (240)^2} = 260.8$ IN. $= 21.7$ FT

$R = L/U = 30.5/21.7 = 1.41$

CONTRACTION & TERMINAL DISPLACEMENTS

x DIRECTION: 0

y DIRECTION: $102(0.00286) = 0.2912$ IN

z DIRECTION: $240(0.00286) = 0.6864$ IN

$Y = \sqrt{(0.2912)^2 + (0.6864)^2} = .746$ IN

SUBSTITUTE & CHECK W/EQ

$$\frac{DY}{U^2(R-1)^2} = \frac{0.5(0.746)}{(21.7)^2(1.41-1)^2} = 0.005 < 0.03$$

→ FLEXIBILITY FOR CASE 2 IS O.K.

SUBJECT: FLEXIBILITY ANALYSIS FOR DØ UPGRADE

NAME: ANDY KUWAZAKI

DATE: 6/9/95 | REVISION DATE:

LN_2 RETURN "C"

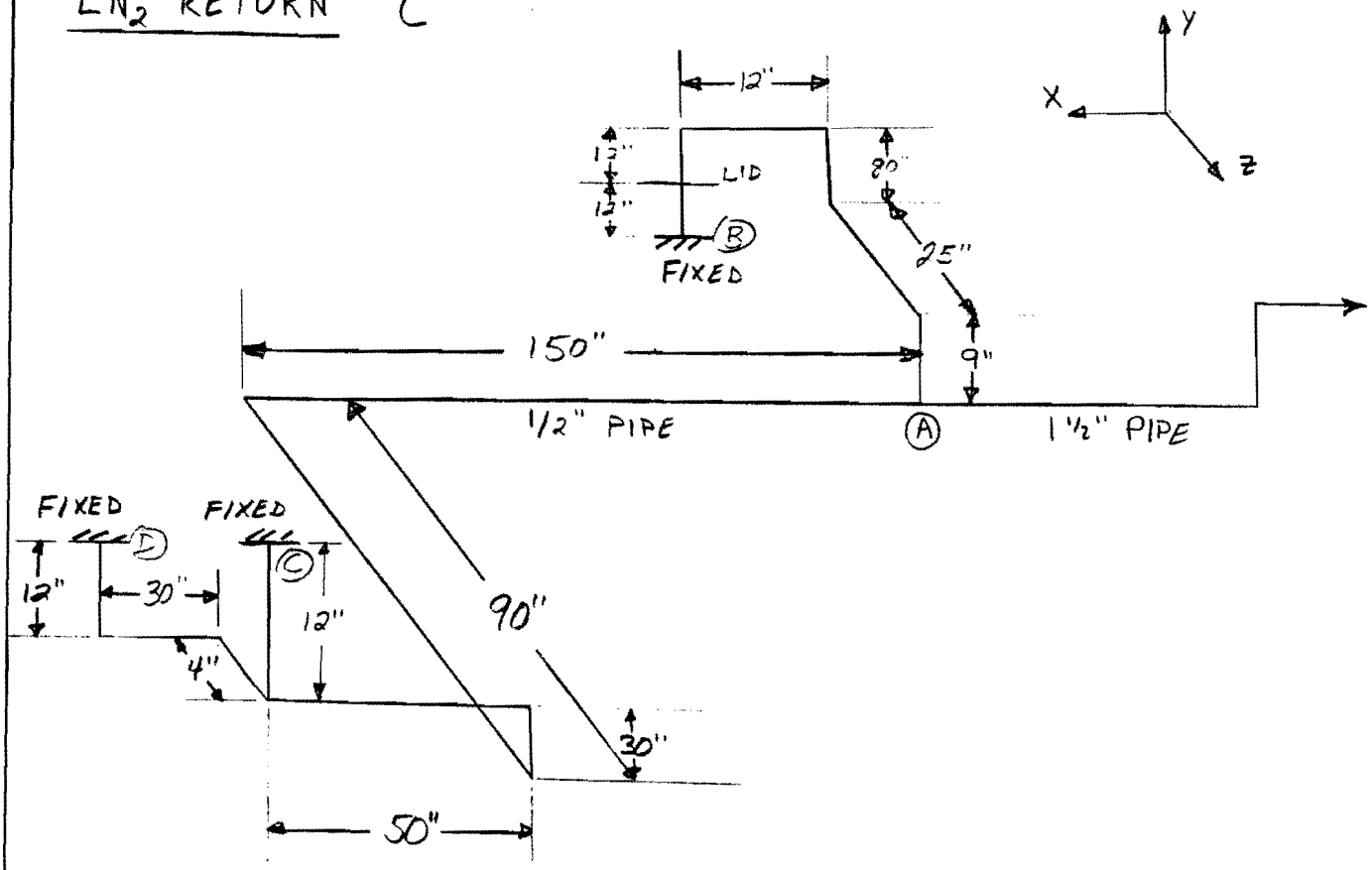

CASE 1

LINE AC WOUID BE THE LEAST FLEXIBLE SO I WILL ANALZE IT. IF ITS O.K., LINE AB & AD ARE O.K.

$D = 0.5$ IN.

$L = 332$ IN. $= 27.7$ Ft

$U = \sqrt{(200)^2 + (42)^2 + (90)^2} = 223$ IN $= 18.6$ Ft

$R = L/U = 27.7/18.6 = 1.49$

CONTRACTION & TERMINAL DISPLACEMENTS

X DIRECTION: $200(0.00286) = 0.572$ IN.

Y DIRECTION: $42(0.00286) = 0.12$ IN.

Z DIRECTION: $90(0.00286) = 0.257$ IN.

$$Y = \sqrt{(0.572)^2 + (0.12)^2 + (0.257)^2} = 0.639$$

SUBSTITUTE & CHECK W/EQ.

$$\frac{DY}{U^2(R-1)^2} = \frac{0.5(0.639)}{(18.6)^2(1.49-1)^2} = 0.004 < .03 \quad \underline{\text{O.K.}}$$

→ FLEXIBILITY FOR CASE 1 IS O.K.

SUBJECT: FLEXIBILITY ANALYSIS FOR DØ UPGRADE

NAME: ANDY KUWAZAKI

DATE: 6/9/95 | REVISION DATE:

LN_2 SUPPLY "D"

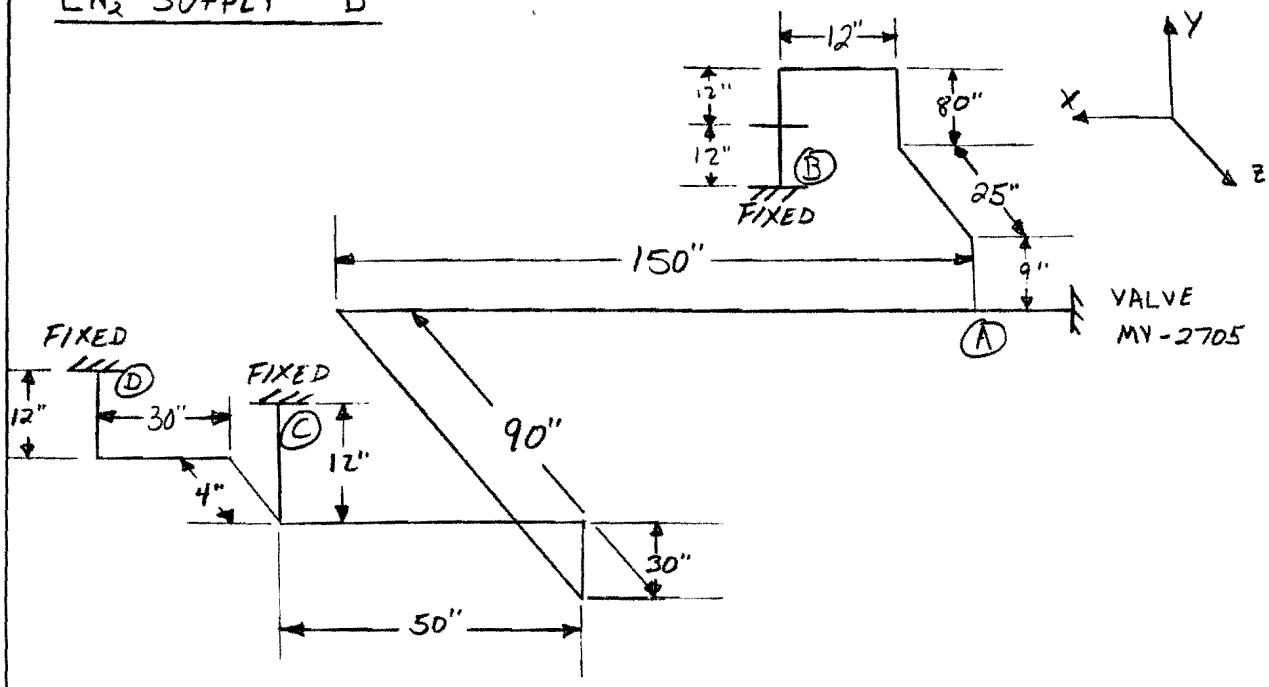

CASE 1

LINE AC IS THE MOST RIGID SO I WILL ANALYZE IT. IF IT IS O.K., THEN LINES AB & AD ARE O.K.

$D = 0.5$ IN.

$L = 332$ IN. $= 27.7$ Ft

$U = \sqrt{(200)^2 + (42)^2 + (90)^2} = 223$ IN. $= 18.6$ Ft

$R = L/U = 27.7/18.6 = 1.49$

CONTRACTION & TERMINAL DISPLACEMENTS

X DIRECTION: $600(0.00286) = 0.572$ IN

Y DIRECTION: $42(0.00286) = 0.12$ IN.

Z DIRECTION: $90(0.00286) = 0.257$ IN.

$Y = \sqrt{(0.572)^2 + (0.12)^2 + (0.257)^2} = 0.639$

SUBSTITUTE & CHECK W/EQ.

$$\frac{DY}{U^2(R-1)^2} = \frac{0.5(0.639)}{(18.6)^2(1.49-1)^2} = 0.004 < 0.03$$

→ FLEXIBILITY FOR CASE 1 IS O.K.

FERMILAB ENGINEERING NOTE	SECTION	PROJECT	SERIAL-CATEGORY	PAGE
	RD/DØ		3823-115	7

SUBJECT: FLEXIBILITY ANALYSIS FOR DØ UPGRADE

NAME: ANDY KUWAZAKI

DATE: 6/15/95

REVISION DATE:

CHECKED & APPROVED 6/23/95

GHe COOLDOWN SUPPLY

(WITH SPIDER-TYPE GUIDES)

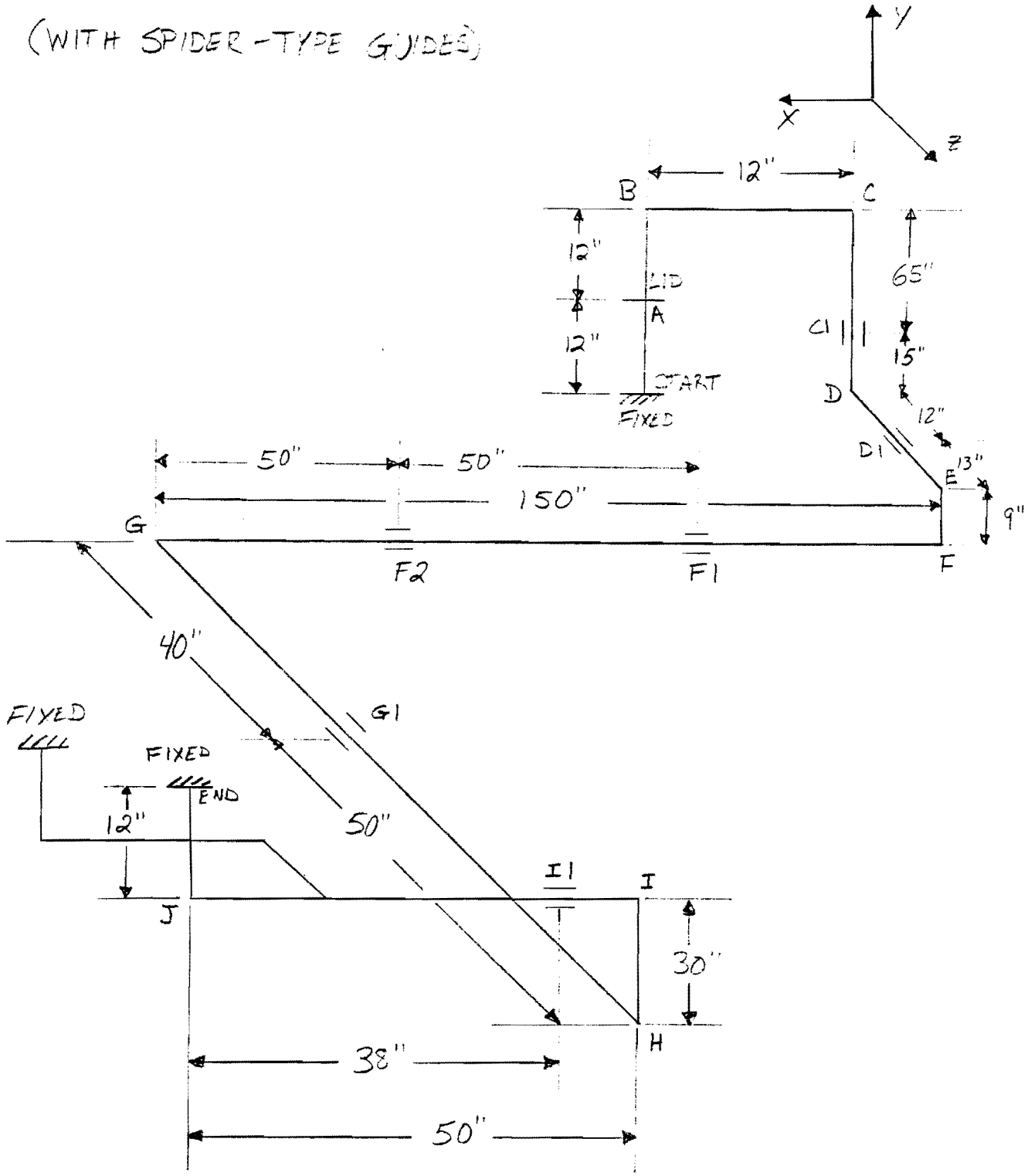

(NOT TO SCALE)

FIG. 1

Load : Dead Weight + Pressure 1 + Thermal 1

*** System Deflections ***

Point Name	Displacements/inch X	Y	Z	Rotations/degree X	Y	Z
START	-0.000	-0.000	0.000	0.000	0.000	0.000
A	-0.023	-0.039	0.002	0.012	0.031	0.212
B	-0.086	-0.077	0.003	-0.002	0.062	0.383
C	-0.048	-0.161	0.018	-0.037	0.074	0.361
C1	0.000	0.047	0.000	0.193	0.063	-0.077
D	-0.013	0.095	-0.074	0.391	0.061	-0.020
D1	0.000	0.000	-0.112	0.479	0.071	0.058
E	0.012	-0.102	-0.154	0.413	0.001	0.142
F	0.035	-0.074	-0.215	0.366	-0.148	0.142
F1	-0.125	-0.000	-0.000	0.187	-0.122	0.054
F2	-0.285	-0.000	0.000	0.008	-0.100	-0.107
G	-0.446	-0.148	0.055	-0.172	0.334	-0.138
G1	-0.000	-0.000	-0.074	-0.217	0.644	0.040
H	0.311	0.045	-0.234	0.257	0.149	0.263
I	0.162	-0.052	-0.012	0.460	-0.049	0.279
I1	0.123	-0.000	-0.000	0.364	-0.048	0.192
J	0.001	0.039	-0.006	0.061	0.023	0.006
END	0.000	0.000	0.000	0.000	0.000	0.000

CONCLUSION:

A 2" PIPE JACKET WILL BE NEED STARTING AT POINT G TO POINT H AS SEEN ON FIG. 4.

Load : Dead Weight + Pressure 1 + Thermal 1

*** Forces and Moments acting on Restraints ***

Point Name	Forces/lb X	Forces/lb Y	Forces/lb Z	Moments/inch-lb X	Moments/inch-lb Y	Moments/inch-lb Z
START	-2	-19	1	14	14	137
C1	1	0	2	0	0	0
D1	9	8	0	0	0	0
F1	0	-2	-8	0	0	0
F2	0	-5	10	0	0	0
G1	-9	-1	0	0	0	0
I1	0	-10	-7	0	0	0
END	1	1	1	28	11	12

Load : Dead Weight + Pressure 1 + Thermal 1

*** Forces and Moments in Element Coordinate System ***

Point Name	Forces/lb X	Forces/lb Y	Forces/lb Z	Moments/inch-lb X	Moments/inch-lb Y	Moments/inch-lb Z
START	19	-1	2	-14	-137	-14
A	-18	1	-2	14	113	-1
B	-17	1	-2	14	89	-16
C	2	-16	-1	16	-1	113
C1	13	1	2	1	18	-65
C1	-13	-4	-1	-1	-18	65
D	12	4	1	1	35	-122
D1	4	-11	1	35	13	17
D1	-4	3	8	-35	-13	-17
E	4	-2	-8	35	-90	53
F	2	4	-8	90	-36	20
F1	8	1	4	-20	97	-13
F1	-8	1	4	20	-97	13
F2	8	2	-4	-20	-91	-57
F2	-8	3	-6	20	91	57
G	8	-0	6	-20	213	24
G1	6	2	-8	24	-104	-19
G1	-6	-1	-1	-24	104	19
H	6	4	1	24	-36	-139
I	6	6	-1	-36	-16	-43
I1	-1	6	6	-43	37	-87
I1	1	3	1	43	-37	87
J	-1	-1	-1	-43	-11	4
END	-1	-1	-1	-11	-12	-28

Load : Dead Weight + Pressure 1 + Thermal 1

*** Forces and Moments in Global Coordinate System ***

Point Name	Forces/lb X	Forces/lb Y	Forces/lb Z	Moments/inch-lb X	Moments/inch-lb Y	Moments/inch-lb Z
START	2	19	-1	-14	-14	-137
A	-2	-18	1	-1	14	113
B	-2	-17	1	-16	14	89
C	-2	-16	1	-16	-1	-113
C1	-2	-13	1	65	-1	18
C1	1	13	-4	-65	1	-18
D	-1	-12	4	122	-1	35
D1	-1	-11	4	-17	13	35
D1	-8	3	-4	17	-13	-35
E	8	-2	4	-53	-90	35
F	8	-2	4	-20	-90	-36
F1	8	1	4	-20	97	-13
F1	-8	1	4	20	-97	13
F2	8	2	-4	-20	-91	-57
F2	-8	3	-6	20	91	57
G	8	-0	6	-20	213	24
G1	8	2	6	19	-104	24
G1	1	-1	-6	-19	104	-24
H	-1	4	6	139	-36	24
I	-1	6	6	-43	-36	-16
I1	-1	6	6	-43	37	-87
I1	1	3	1	43	-37	87
J	-1	-1	-1	-43	-11	4
END	-1	-1	-1	-28	-11	-12

Load : Dead Weight + Pressure 1 + Thermal 1

*** System Stresses (ANSI B31.3) ***

Point Name	In-Plane SIF	Out Plane SIF	Section Modulus	Stresses/psi Hoop	Longitu.	Principal	Code	Allow.
START	1.00	1.00	0.03	1631	4584	4598	4993	62625
A	1.00	1.00	0.03	1631	3855	3874	4249	62625
B	1.00	1.00	0.03	1631	3189	3216	3616	62625
C	1.00	1.00	0.03	1631	4068	4068	4273	62625
C1	1.00	1.00	0.03	1631	2690	2690	3512	62625
D	1.00	1.00	0.03	1631	4411	4411	5370	62625
D1	1.00	1.00	0.03	1631	1281	2003	3367	62625
E	1.00	1.00	0.03	1631	2519	3468	4296	62625
F	1.00	1.00	0.03	1631	1845	3063	3939	62625
F1	1.00	1.00	0.03	1631	3551	3593	4106	62625
F2	1.00	1.00	0.03	1631	3818	3855	5033	62625
G	1.00	1.00	0.03	1631	6975	6991	7468	62625
G1	1.00	1.00	0.03	1631	3758	3816	5842	62625
H	1.00	1.00	0.03	1631	4797	4883	5489	62625
I	1.00	1.00	0.03	1631	2023	2390	2913	62625
I1	1.00	1.00	0.03	1631	3409	3613	4070	62625
J	1.00	1.00	0.03	1631	1906	1975	2212	62625
END	1.00	1.00	0.03	1631	1532	1744	1855	62625

Load : Dead Weight + Pressure 1 + Thermal 1

*** System Maxima ***

Maximum X displacement = -0.446 inch at point G
Maximum Y displacement = -0.161 inch at point C
Maximum Z displacement = -0.234 inch at point H

Maximum X rotation = 0.479 degree at point D1
Maximum Y rotation = 0.644 degree at point G1
Maximum Z rotation = 0.383 degree at point B

Maximum X force = -8 lb at point D1
Maximum Y force = 19 lb at point START
Maximum Z force = -6 lb at point F2

Maximum X moment = 139 inch-lb at point H
Maximum Y moment = 213 inch-lb at point G
Maximum Z moment = -137 inch-lb at point START

Maximum hoop stress = 1631 psi at point START
Maximum longitudinal stress = 6975 psi at point G
Maximum principal stress = 6991 psi at point G
Maximum code stress = 7468 psi at point G
Maximum stress ratio (code/allowable) = 0.12 at point G

```
File Name ............... GASHESUP
Project ................. D-Zero Solenoid Upgrade
Department .............. Research Division / D-Zero Mechanical
Contract Number .........
Description ............. Preliminary Solution for GHe Cooldown
                          Supply
Prepared by ............. Andy T. Kuwazaki
Checked by ..............

ANSI code ............... ANSI B31.3
Input unit .............. English
Output unit ............. English
Output columns .......... 80
Base temperature ........ 70
F factor ................ 1.0
E factor ................ 1.33

Number of dynamic modes.. 8
Cut-off frequency ....... 33        Hz
Max no. of iterations ... 12
Convergence tolerance ... 3
Force tolerance ......... 5         lb
```

Frm /To	Point name	DX (feet)	DY (feet)	DZ (feet)	Radius (inch)	X (feet)	Y (feet)	Z (feet)
C	This analysis is intended as a preliminary estimate of the defelctions and							
C	stresses in the 0.5" He Supply pipe.							
C	The load combination: Dead Weight + Pressure + Thermal							
C	All points followed by a number represent spider-type locations.							
F	START					0.000	0.000	0.000
T	A		12"			0.000	1.000	0.000
T	B		12"			0.000	2.000	0.000
T	C	-12"				-1.000	2.000	0.000
T	C1		-65"			-1.000	-3.417	0.000
T	D		-15"			-1.000	-4.667	0.000
T	D1			12"		-1.000	-4.667	1.000
T	E			13"		-1.000	-4.667	2.083
T	F		-9"			-1.000	-5.417	2.083
T	F1	50"				3.167	-5.417	2.083
T	F2	50"				7.333	-5.417	2.083
T	G	50"				11.500	-5.417	2.083
T	G1			40"		11.500	-5.417	5.417
T	H			50"		11.500	-5.417	9.583
T	I		30"			11.500	-2.917	9.583
T	I1	12"				12.500	-2.917	9.583
T	J	38"				15.667	-2.917	9.583
T	END		12"			15.667	-1.917	9.583

Point	Data	Description
START	Pipe	Pipe data identifier = P1
		Nominal Diameter = .5
		Pipe Schedule =
		Actual Pipe O. D. = .840 inch
		Wall Thickness = .083 inch
		Corrosion Allowance = 0 inch
		Insulation Thickness = 0 inch
		Insulation Density = 0 lb/cu.ft
		Content S. G. = 0
	Material	Data Identifier = SS
		Austenitic stainless (301-309, 316, 321, 237)
		Density = 0.2899 lb/cu.inch

Tempera. (deg.F)	Modulus (psi)	Expansion (inch/inch)
-325.	30400000	-0.00321
-150.	29900000	-0.00189
-50.	29400000	-0.00103
70.	28300000	0.00000
200.	27700000	0.00122
300.	27100000	0.00218
400.	26600000	0.00317
500.	26100000	0.00417
600.	25400000	0.00520
700.	24800000	0.00625
800.	24100000	0.00733
900.	23400000	0.00843
1000.	22700000	0.00957
1100.	22000000	0.01070
1200.	21300000	0.01183
1300.	20700000	0.01297
1400.	19300000	0.01410

Temperature (deg.F)	Allowable stresses (psi)
-425	25050

Load — Load data identifier = GHE

Case No.	Temperature (deg.F)	Pressure (psig)	Expansion (inch/inch)
1	-450	350	-0.003210

Point	Data	Description
	Anchor	Rigid in all directions
A		
B		
C		
C1	Guide	
D		
D1	Guide	
E		
F		
F1	Guide	
F2	Guide	
G		
G1	Guide	
H		

SUBJECT: FLEXIBILITY ANALYSIS FOR DØ UPGRADE

NAME: ANDY KUWAZAKI

DATE: 6/15/95 | REVISION DATE:

CHECKED & APPR'VD 4/24/95

GHe COOLDOWN RETURN

(WITH SPIDER-TYPE GUIDES)

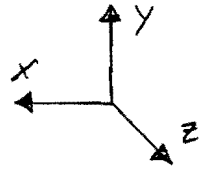

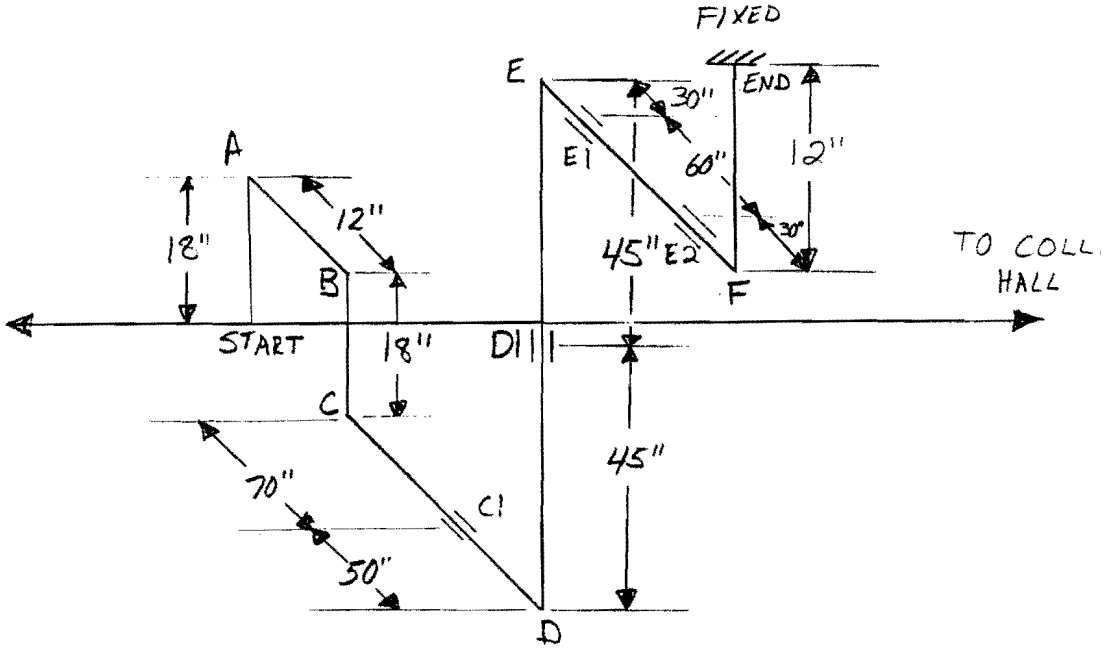

FIG. 2

(NOT TO SCALE)

Load : Dead Weight + Pressure 1 + Thermal 1

*** System Deflections ***

Point Name	Displacements/inch X	Y	Z	Rotations/degree X	Y	Z
START	0.000	-0.000	0.000	0.000	0.000	0.000
A	0.000	-0.058	0.024	0.121	0.000	0.000
B	0.000	-0.082	-0.015	0.093	0.000	0.000
C	0.000	-0.024	-0.036	0.077	0.000	0.000
C1	0.000	0.000	-0.261	-0.246	0.000	0.000
D	0.000	0.163	-0.422	0.146	0.000	0.000
D1	0.000	0.019	0.000	0.735	0.000	0.000
E	0.000	-0.126	0.387	0.004	0.000	0.000
E1	0.000	-0.000	0.291	-0.226	0.000	0.000
E2	0.000	0.000	0.099	-0.031	0.000	0.000
F	0.000	0.039	0.002	-0.041	0.000	0.000
END	0.000	-0.000	-0.000	0.000	0.000	0.000

CONCLUSION:

THE VACUUM JACKET FROM POINT D TO E NEEDS TO BE INCREASED FROM 1½" TO 2" PIPE SIZE TO ACCOMODATE THE DISPLACEMENT AT THESE POINTS.

Load : Dead Weight + Pressure 1 + Thermal 1

*** Forces and Moments acting on Restraints ***

Point Name	Forces/lb X	Forces/lb Y	Forces/lb Z	Moments/inch-lb X	Moments/inch-lb Y	Moments/inch-lb Z
START	0	-6	4	84	0	0
C1	0	2	0	0	0	0
D1	0	0	1	0	0	0
E1	0	-18	0	0	0	0
E2	0	4	0	0	0	0
END	0	-5	-5	7	0	0

Load : Dead Weight + Pressure 1 + Thermal 1

*** Forces and Moments in Element Coordinate System ***

Point Name	Forces/lb X	Forces/lb Y	Forces/lb Z	Moments/inch-lb X	Moments/inch-lb Y	Moments/inch-lb Z
START	6	-4	0	0	0	-84
A	-5	4	0	0	0	11
B	4	-4	0	0	0	43
C	3	4	0	0	0	-30
C1	4	1	0	0	0	49
C1	-4	-3	0	0	0	-49
D	4	6	0	0	0	-183
D1	9	4	0	0	0	2
D1	-9	-5	0	0	0	-2
E	11	5	0	0	0	-231
E1	5	13	0	0	0	-131
E1	-5	5	0	0	0	131
E2	5	-1	0	0	0	51
E2	-5	-3	0	0	0	-51
F	5	4	0	0	0	-55
END	5	5	0	0	0	-7

Load : Dead Weight + Pressure 1 + Thermal 1

*** Forces and Moments in Global Coordinate System ***

Point Name	Forces/lb X	Forces/lb Y	Forces/lb Z	Moments/inch-lb X	Moments/inch-lb Y	Moments/inch-lb Z
START	0	6	-4	-84	0	0
A	0	-5	4	11	0	0
B	0	-4	4	-43	0	0
C	0	-3	4	30	0	0
C1	0	1	4	-49	0	0
C1	0	-3	-4	49	0	0
D	0	6	4	183	0	0
D1	0	9	4	2	0	0
D1	0	-9	-5	-2	0	0
E	0	11	5	-231	0	0
E1	0	13	5	131	0	0
E1	0	5	-5	-131	0	0
E2	0	-1	5	-51	0	0
E2	0	-3	-5	51	0	0
F	0	4	5	55	0	0
END	0	5	5	-7	0	0

Load : Dead Weight + Pressure 1 + Thermal 1

*** System Stresses (ANSI B31.3) ***

Point Name	In-Plane SIF	Out Plane SIF	Section Modulus	Stresses/psi Hoop	Longitu.	Principal	Code	Allow.
START	1.00	1.00	0.03	699	2703	2703	2860	62625
A	1.00	1.00	0.03	699	578	699	1874	62625
B	1.00	1.00	0.03	699	1545	1545	1915	62625
C	1.00	1.00	0.03	699	1170	1170	2369	62625
C1	1.00	1.00	0.03	699	1715	1715	5600	62625
D	1.00	1.00	0.03	699	5669	5669	7855	62625
D1	1.00	1.00	0.03	699	366	699	1694	62625
E	1.00	1.00	0.03	699	7112	7112	7187	62625
E1	1.00	1.00	0.03	699	4144	4144	4238	62625
E2	1.00	1.00	0.03	699	1788	1788	1881	62625
F	1.00	1.00	0.03	699	1911	1911	2004	62625
END	1.00	1.00	0.03	699	506	699	1025	62625

Load : Dead Weight + Pressure 1 + Thermal 1

*** System Maxima ***

Maximum X displacement = 0.000 inch at point
Maximum Y displacement = 0.163 inch at point D
Maximum Z displacement = -0.422 inch at point D

Maximum X rotation = 0.735 degree at point D1
Maximum Y rotation = 0.000 degree at point
Maximum Z rotation = 0.000 degree at point

Maximum X force = 0 lb at point
Maximum Y force = 13 lb at point E1
Maximum Z force = -5 lb at point D1

Maximum X moment = -231 inch-lb at point E
Maximum Y moment = 0 inch-lb at point
Maximum Z moment = 0 inch-lb at point

Maximum hoop stress = 699 psi at point START
Maximum longitudinal stress = 7112 psi at point E
Maximum principal stress = 7112 psi at point E
Maximum code stress = 7855 psi at point D
Maximum stress ratio (code/allowable) = 0.13 at point D

File Name	GHERETUR
Project	D-Zero Solenoid Upgrade
Department	Research Division / D-Zero Mechanical
Contract Number	
Description	Preliminary Solution For GHe Cooldown Return
Prepared by	Andy Kuwazaki
Checked by	
ANSI code	ANSI B31.3
Input unit	English
Output unit	English
Output columns	80
Base temperature	70
F factor	1.0
E factor	1.33
Number of dynamic modes..	8
Cut-off frequency	33 Hz
Max no. of iterations ...	12
Convergence tolerance ...	3
Force tolerance	5 lb

Frm /To	Point name	DX (feet)	DY (feet)	DZ (feet)	Radius (inch)	X (feet)	Y (feet)	Z (feet)
C	This analysis is inteneded as a preliminary estimate of the defelctions							
C	and stresses in the 0.5" He Return.							
C	Load combinations considered: Dead Weight + Pressure + Thermal							
C	All points followed by a number represent spider-type guide locations.							
F	START					0.000	0.000	0.000
T	A		18"			0.000	1.500	0.000
T	B			12"		0.000	1.500	1.000
T	C		-18"			0.000	0.000	1.000
T	C1			70"		0.000	0.000	6.833
T	D			50"		0.000	0.000	11.000
T	D1		45"			0.000	3.750	11.000
T	E		45"			0.000	7.500	11.000
T	E1			30"		0.000	7.500	13.500
T	E2			60"		0.000	7.500	18.500
T	F			30"		0.000	7.500	21.000
T	END		12"			0.000	8.500	21.000

Point	Data	Description
START	Pipe	Pipe data identifier = p1
		Nominal Diameter = .5
		Pipe Schedule =
		Actual Pipe O. D. = .84 inch
		Wall Thickness = .083 inch
		Corrosion Allowance = 0 inch
		Insulation Thickness = 0 inch
		Insulation Density = 0 lb/cu.ft
		Content S. G. = 0
	Material	Data Identifier = SS
		Austenitic stainless (301-309, 316, 321, 237)
		Density = 0.2899 lb/cu.inch

Tempera. (deg.F)	Modulus (psi)	Expansion (inch/inch)
-325.	30400000	-0.00321
-150.	29900000	-0.00189
-50.	29400000	-0.00103
70.	28300000	0.00000
200.	27700000	0.00122
300.	27100000	0.00218
400.	26600000	0.00317
500.	26100000	0.00417
600.	25400000	0.00520
700.	24800000	0.00625
800.	24100000	0.00733
900.	23400000	0.00843
1000.	22700000	0.00957
1100.	22000000	0.01070
1200.	21300000	0.01183
1300.	20700000	0.01297
1400.	19300000	0.01410

Temperature (deg.F)	Allowable stresses (psi)
-425	25050

	Load	Load data identifier = ghe			
		Case No.	Temperature (deg.F)	Pressure (psig)	Expansion (inch/inch)
		1	-425	150	-0.003210
	Anchor	Rigid in all directions			
A					
B					
C					
C1	Guide				
D					
D1	Guide				
E					
E1	Guide				
E2	Guide				
F					

FERMILAB ENGINEERING NOTE	SECTION	PROJECT	SERIAL-CATEGORY	PAGE
	RD/DØ		3223-115	9

SUBJECT	NAME	
FLEXIBILITY ANALYSIS FOR DØ UPGRADE	ANDY KUWAZAKI	
	DATE 6/15/95	REVISION DATE

CHECKED & APPROVED 6/23/95

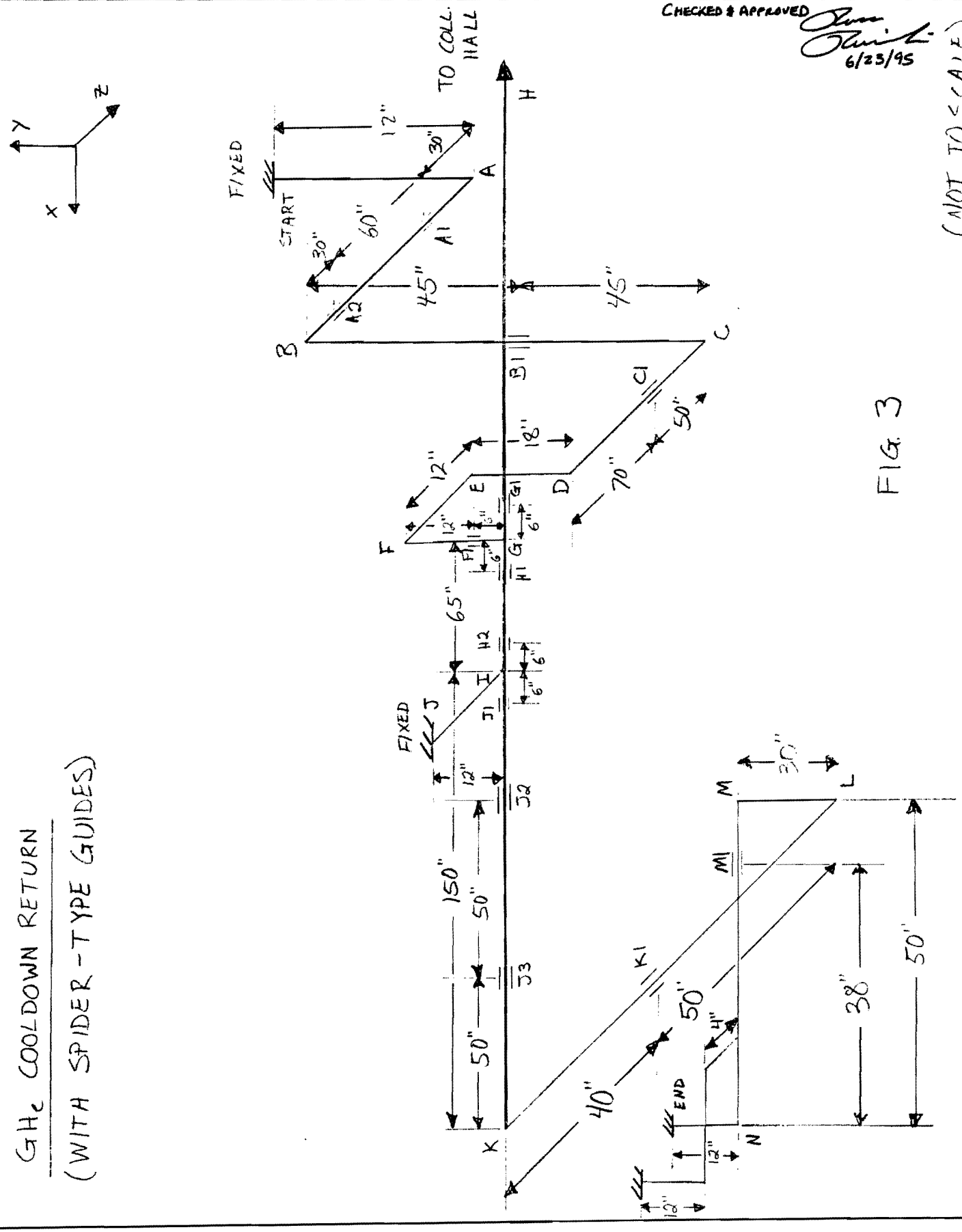

(NOT TO SCALE)

FIG. 3

GH_e COOLDOWN RETURN
(WITH SPIDER-TYPE GUIDES)

Load : Dead Weight + Pressure 1 + Thermal 1

*** System Deflections ***

Point Name	Displacements/inch X	Y	Z	Rotations/degree X	Y	Z
START	-0.000	-0.000	-0.000	0.000	0.000	-0.000
A	-0.000	0.023	0.001	-0.024	0.000	-0.000
A1	0.000	0.000	0.058	-0.012	-0.000	0.000
A2	-0.000	-0.000	0.171	-0.197	0.000	0.000
B	-0.000	-0.119	0.228	-0.059	0.001	0.000
B1	-0.000	-0.034	0.000	0.449	0.002	0.001
C	0.001	0.051	-0.259	0.119	0.002	0.003
C1	0.000	-0.000	-0.164	-0.119	0.001	0.010
D	0.001	-0.017	-0.032	0.065	-0.001	0.018
E	-0.005	-0.051	-0.012	0.075	-0.001	0.020
F	-0.005	-0.034	0.011	0.076	-0.001	0.022
F1	0.000	-0.011	0.000	0.019	-0.000	0.023
G	0.002	-0.000	-0.000	-0.004	-0.000	0.006
G	0.002	-0.000	-0.000	-0.004	-0.000	0.006
G1	0.013	-0.000	-0.000	-0.004	0.007	-0.004
H	0.036	0.000	0.001	-0.004	0.007	-0.001
G	0.002	-0.000	-0.000	-0.004	-0.000	0.006
H1	-0.009	-0.000	-0.000	-0.012	-0.006	-0.004
H2	-0.110	-0.000	-0.000	-0.090	0.002	0.008
I	-0.121	0.000	-0.000	-0.099	0.000	0.000
I	-0.121	0.000	-0.000	-0.099	0.000	0.000
J	-0.121	-0.021	0.023	-0.101	0.000	0.000
I	-0.121	0.000	-0.000	-0.099	0.000	0.000
J1	-0.132	-0.000	0.000	-0.103	-0.003	-0.008
J2	-0.215	-0.000	-0.000	-0.135	0.021	0.022
J3	-0.310	-0.000	0.000	-0.170	-0.088	-0.094
K	-0.404	-0.142	-0.007	-0.206	0.357	-0.135
K1	-0.000	-0.000	-0.083	-0.165	0.541	0.036
L	0.233	0.013	-0.177	0.208	0.089	0.249
M	0.095	-0.043	-0.010	0.342	-0.040	0.244
M1	0.072	-0.000	-0.000	0.271	-0.036	0.154
N	0.000	0.023	-0.004	0.045	0.017	-0.002
END	0.000	0.000	0.000	0.000	0.000	0.000

CONCLUSION:

VACUUM JACKET FROM POINT B TO C, AND FROM POINT K TO L NEEDS TO BE INCREASED FROM 1½" TO 2" PIPE SIZE TO ACCOMODATE THE DISPLACEMENTS AT THESE POINTS.

Load : Dead Weight + Pressure 1 + Thermal 1

*** Forces and Moments acting on Restraints ***

Point Name	Forces/lb X	Forces/lb Y	Forces/lb Z	Moments/inch-lb X	Moments/inch-lb Y	Moments/inch-lb Z
START	-0	-4	-4	10	0	-0
A1	0	2	0	0	0	0
A2	-0	-14	0	0	0	0
B1	-0	0	2	0	0	0
C1	0	-1	0	0	0	0
F1	7	0	8	0	0	0
G1	0	-6	-3	0	0	0
H1	0	-2	-3	0	0	0
H2	0	-2	-0	0	0	0
J1	0	-2	1	0	0	0
J2	0	-1	-2	0	0	0
J3	0	-6	5	0	0	0
K1	-8	-2	0	0	0	0
M1	0	-9	-5	0	0	0
END	2	1	1	21	8	9

Load : Dead Weight + Pressure 1 + Thermal 1

*** Forces and Moments in Element Coordinate System ***

Point Name	Forces/lb X	Forces/lb Y	Forces/lb Z	Moments/inch-lb X	Moments/inch-lb Y	Moments/inch-lb Z
START	-4	4	-0	0	0	10
A	3	-4	0	-0	0	38
A1	4	-2	-0	-0	-0	35
A1	-4	-1	-0	0	0	-35
A2	4	4	0	-0	0	-113
A2	-4	10	0	0	-0	113
B	4	-9	-0	-0	0	169
B1	6	-4	0	-0	0	9
B1	-6	2	-0	0	-0	-9
C	3	-2	0	-0	1	94
C1	2	-1	-0	-1	-0	3
C1	-2	2	-0	1	0	-3
D	2	2	0	-1	0	-13
E	3	-2	0	0	1	21
F	2	4	0	-1	0	-22
F1	-5	-2	-0	-0	1	45
F1	5	7	6	0	-45	1
G	-5	-7	-6	-0	8	40
G	0	-5	3	0	-17	-28
G1	-0	5	-3	-0	-0	-4
G1	0	1	-0	-0	0	4
H	-0	-0	0	0	0	0
G	-7	-0	3	8	-17	-13
H1	7	-0	-3	-8	-3	13
H1	-7	2	0	8	-3	13
H2	7	1	-0	-8	-1	-10
H2	-7	-0	1	8	-10	1
I	7	0	-0	-8	8	-3
I	-0	-0	1	0	-4	0
J	0	0	0	-0	-0	-0
I	-7	-0	-0	4	-8	3
J1	7	0	1	-4	11	-5
J1	-7	2	-0	4	5	11
J2	7	1	0	-4	13	2
J2	-7	0	1	4	-13	-2
J3	7	3	-1	-4	-44	-59
J3	-7	3	-4	4	44	59
K	7	-0	4	-4	170	23
K1	4	2	-7	23	-105	-34
K1	-4	0	-2	-23	105	34
L	4	3	2	23	-23	-96
M	4	4	-2	-23	-26	-32
M1	-2	5	4	-32	28	-82
M1	2	4	1	32	-28	82
N	-2	-1	-1	-32	-8	11
END	-1	-1	-2	-8	-9	-21

Load : Dead Weight + Pressure 1 + Thermal 1

*** Forces and Moments in Global Coordinate System ***

Point Name	Forces/lb X	Forces/lb Y	Forces/lb Z	Moments/inch-lb X	Moments/inch-lb Y	Moments/inch-lb Z
START	0	4	4	-10	-0	0
A	-0	-3	-4	-38	0	0
A1	-0	-2	-4	35	-0	0
A1	-0	-1	4	-35	0	-0
A2	0	4	-4	-113	0	0
A2	0	10	4	113	-0	-0
B	-0	-9	-4	169	0	0
B1	-0	-6	-4	-9	0	0
B1	0	6	2	9	-0	-0
C	-0	-3	-2	-94	0	1
C1	-0	-1	-2	3	-0	1
C1	-0	2	2	-3	0	-1
D	0	2	-2	-13	0	1
E	0	3	-2	21	0	1
F	0	4	-2	-22	0	1
F1	0	5	-2	-45	0	1
F1	-7	-5	-6	45	-0	-1
G	7	5	6	-8	0	-40
G	-0	-5	-3	-0	-17	28
G1	0	5	3	0	-0	4
G1	-0	1	0	0	0	-4
H	0	-0	-0	-0	0	-0
G	-7	0	-3	8	17	13
H1	7	0	3	-8	3	-13
H1	-7	2	0	8	-3	13
H2	7	1	-0	-8	-1	-10
H2	-7	1	0	8	1	10
I	7	-0	-0	-8	-3	-8
I	0	1	0	4	0	-0
J	-0	0	-0	0	-0	0
I	-7	-0	0	4	3	8
J1	7	1	-0	-4	-5	-11
J1	-7	2	-0	4	5	11
J2	7	1	0	-4	13	2
J2	-7	0	1	4	-13	-2
J3	7	3	-1	-4	-44	-59
J3	-7	3	-4	4	44	59
K	7	-0	4	-4	170	23
K1	7	2	4	34	-105	23
K1	2	0	-4	-34	105	-23
L	-2	3	4	96	-23	23
M	-2	4	4	-32	-23	-26
M1	-2	5	4	-32	28	-82
M1	2	4	1	32	-28	82
N	-2	-1	-1	-32	-8	11
END	-2	-1	-1	-21	-8	-9

Load : Dead Weight + Pressure 1 + Thermal 1

*** System Stresses (ANSI B31.3) ***

Point Name	In-Plane SIF	Out Plane SIF	Section Modulus	Stresses/psi Hoop	Longitu.	Principal	Code	Allow.
START	1.00	1.00	0.03	699	583	699	941	62625
A	1.00	1.00	0.03	699	1396	1396	1496	62625
A1	1.00	1.00	0.03	699	1308	1308	1408	62625
A2	1.00	1.00	0.03	699	3598	3598	3698	62625
B	1.00	1.00	0.03	699	5277	5277	5365	62625
B1	1.00	1.00	0.03	699	578	699	1457	62625
C	1.00	1.00	0.03	699	3051	3051	5235	62625
C1	1.00	1.00	0.03	699	376	699	4260	62625
D	1.00	1.00	0.03	699	657	701	1841	62625
E	1.00	1.00	0.03	699	910	910	1301	62625
F	1.00	1.00	0.03	699	900	900	1581	62625
F1	1.00	1.00	0.03	699	1561	1561	1709	62625
G	1.00	1.00	0.03	699	1455	1455	1826	62625
G1	1.00	1.00	0.03	699	392	699	500	62625
H	1.00	1.00	0.03	699	271	699	380	62625
G	1.00	1.00	0.03	699	928	978	1138	62625
H1	1.00	1.00	0.03	699	699	816	838	62625
.2	1.00	1.00	0.03	699	614	781	706	62625
I	1.00	1.00	0.03	699	548	763	674	62625
J	1.00	1.00	0.03	699	271	699	380	62625
I	1.00	1.00	0.03	699	548	718	674	62625
J1	1.00	1.00	0.03	699	664	741	828	62625
J2	1.00	1.00	0.03	699	686	750	832	62625
J3	1.00	1.00	0.03	699	2454	2456	3157	62625
K	1.00	1.00	0.03	699	5331	5332	5689	62625
K1	1.00	1.00	0.03	699	3517	3557	5265	62625
L	1.00	1.00	0.03	699	3175	3221	3664	62625
M	1.00	1.00	0.03	699	1502	1629	2150	62625
M1	1.00	1.00	0.03	699	2813	2915	3187	62625
N	1.00	1.00	0.03	699	1264	1286	1422	62625
END	1.00	1.00	0.03	699	936	983	1101	62625

*** System Maxima ***

Maximum X displacement = -0.404 inch at point K
Maximum Y displacement = -0.142 inch at point K
Maximum Z displacement = -0.259 inch at point C

Maximum X rotation = 0.449 degree at point B1
Maximum Y rotation = 0.541 degree at point K1
Maximum Z rotation = 0.249 degree at point L

Maximum X force = -7 lb at point F1
Maximum Y force = 10 lb at point A2
Maximum Z force = -6 lb at point F1

Maximum X moment = 169 inch-lb at point B
Maximum Y moment = 170 inch-lb at point K
Maximum Z moment = -82 inch-lb at point M1

Maximum hoop stress = 699 psi at point START
Maximum longitudinal stress = 5331 psi at point K
Maximum principal stress = 5332 psi at point K
Maximum code stress = 5689 psi at point K
Maximum stress ratio (code/allowable) = 0.09 at point K

File Name	TOGETHER
Project	D-Zero Solenoid Upgrade
Department	Research Division / D-Zero Mechanical
Contract Number	
Description	Preliminary Solution for GHe Cooldown Return.
Prepared by	Andy T. Kuwazaki
Checked by	
ANSI code	ANSI B31.3
Input unit	English
Output unit	English
Output columns	80
Base temperature	70
F factor	1.0
E factor	1.33
Number of dynamic modes..	8
Cut-off frequency	33 Hz
Max no. of iterations ...	12
Convergence tolerance ...	3
Force tolerance	5 lb

Frm /To	Point name	DX (feet)	DY (feet)	DZ (feet)	Radius (inch)	X (feet)	Y (feet)	Z (feet)
C	This analysis is intended as a preliminary estimate of the defelctions and							
C	stresses in the 0.5" He Supply pipe.							
C	The load combination: Dead Weight + Pressure + Thermal							
C	All points followed by a number represent spider-type locations.							
F	START					0.000	0.000	0.000
T	A		-12"			0.000	-1.000	0.000
T	A1			-30"		0.000	-1.000	-2.500
T	A2			-60"		0.000	-1.000	-7.500
T	B			-30"		0.000	-1.000	-10.000
T	B1		-45"			0.000	-4.750	-10.000
T	C		-45"			0.000	-8.500	-10.000
T	C1			-50"		0.000	-8.500	-14.167
T	D			-70"		0.000	-8.500	-20.000
T	E		18"			0.000	-7.000	-20.000
T	F			-12"		0.000	-7.000	-21.000
T	F1		-12"			0.000	-8.000	-21.000
T	G		-6"			0.000	-8.500	-21.000
F	G	0.000	-8.500	-21.000		0.000	-8.500	-21.000
T	G1	-6"				-0.500	-8.500	-21.000
T	H	-12"				-1.500	-8.500	-21.000
F	G	0.000	-8.500	-21.000		0.000	-8.500	-21.000
T	H1	6"				0.500	-8.500	-21.000
T	H2	53"				4.917	-8.500	-21.000
T	I	6"				5.417	-8.500	-21.000
F	I	5.417	-8.500	-21.000		5.417	-8.500	-21.000
T	J			-12"		5.417	-8.500	-22.000
F	I	5.417	-8.500	-21.000		5.417	-8.500	-21.000
T	J1	6"				5.917	-8.500	-21.000
T	J2	44"				9.583	-8.500	-21.000
T	J3	50"				13.750	-8.500	-21.000
T	K	50"				17.917	-8.500	-21.000
T	K1			40"		17.917	-8.500	-17.667
T	L			50"		17.917	-8.500	-13.500
T	M		30"			17.917	-6.000	-13.500
T	M1	12"				18.917	-6.000	-13.500
T	N	38"				22.083	-6.000	-13.500
T	END		12"			22.083	-5.000	-13.500

Point	Data	Description
START	Pipe	Pipe data identifier = P1
		Nominal Diameter = .5
		Pipe Schedule =
		Actual Pipe O. D. = .840 inch
		Wall Thickness = .083 inch
		Corrosion Allowance = 0 inch
		Insulation Thickness = 0 inch
		Insulation Density = 0 lb/cu.ft
		Content S. G. = 0
	Material	Data Identifier = SS
		Austenitic stainless (301-309, 316, 321, 237)
		Density = 0.2899 lb/cu.inch

Tempera. (deg.F)	Modulus (psi)	Expansion (inch/inch)
-325.	30400000	-0.00321
-150.	29900000	-0.00189
-50.	29400000	-0.00103
70.	28300000	0.00000
200.	27700000	0.00122
300.	27100000	0.00218
400.	26600000	0.00317
500.	26100000	0.00417
600.	25400000	0.00520
700.	24800000	0.00625
800.	24100000	0.00733
900.	23400000	0.00843
1000.	22700000	0.00957
1100.	22000000	0.01070
1200.	21300000	0.01183
1300.	20700000	0.01297
1400.	19300000	0.01410

Temperature (deg.F)	Allowable stresses (psi)
-425	25050

	Load	Load data identifier = GHE

Case No.	Temperature (deg.F)	Pressure (psig)	Expansion (inch/inch)
1	-150	150	-0.001890

	Anchor	Rigid in all directions
A		
A1	Guide	
A2	Guide	
B		
B1	Guide	
C		
C1	Guide	
D		
E		
F		
F1	Guide	

Point	Data	Description
G	Tee	Weld-in contour insert
G		
G1	Guide	
H		
G		
H1	Guide	
H2	Guide	
I	Tee	Weld-in contour insert
I		
J		
I		
J1	Guide	
J2	Guide	
J3	Guide	
K		
K1	Guide	
L		
M		
M1	Guide	
N		
END	Anchor	Rigid in all directions

FERMILAB ENGINEERING NOTE	SECTION	PROJECT	SERIAL-CATEGORY	PAGE
	RD/DØ		3823-115	10

SUBJECT	NAME	
X-FER LINES FOR DØ UPGRADE	ANDY KUWAZAKI	
	DATE 6/14/95	REVISION DATE

GHe COOLDOWN RETURN: SECTIONAL DWG.

(NOT TO SCALE)

MINIMUM DISPLACEMENT = .384"

PIPE SIZE (in.)	I.D (in.)	O.D. (in.)
.5	—	.84
1.5	1.682	—
2	2.157	—

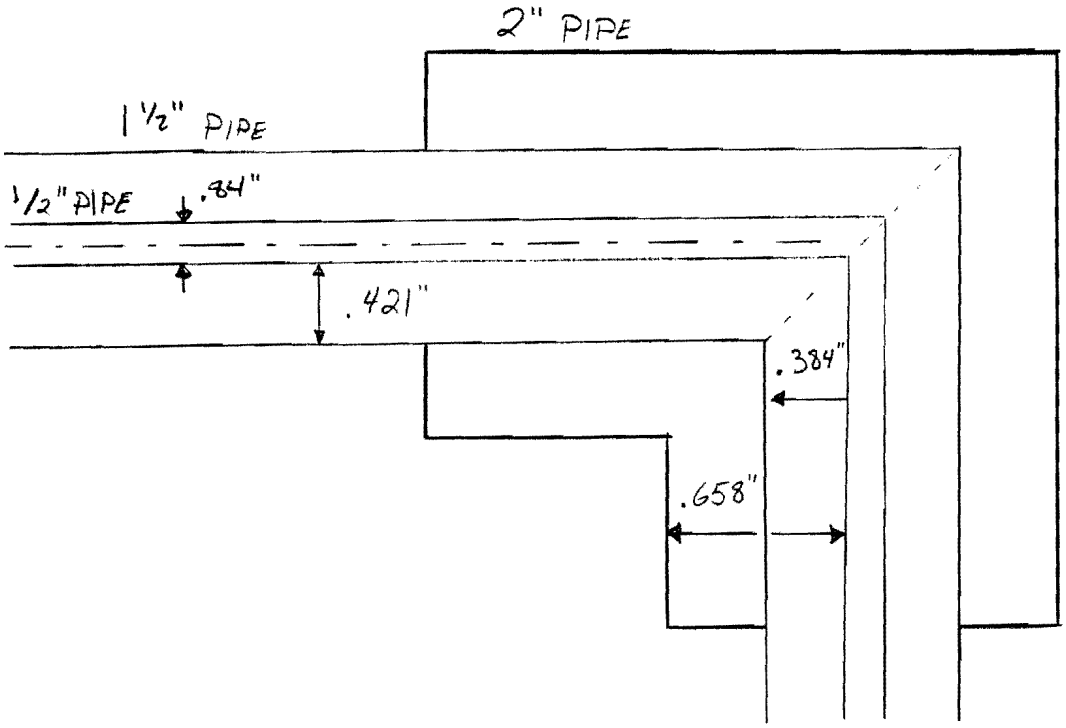
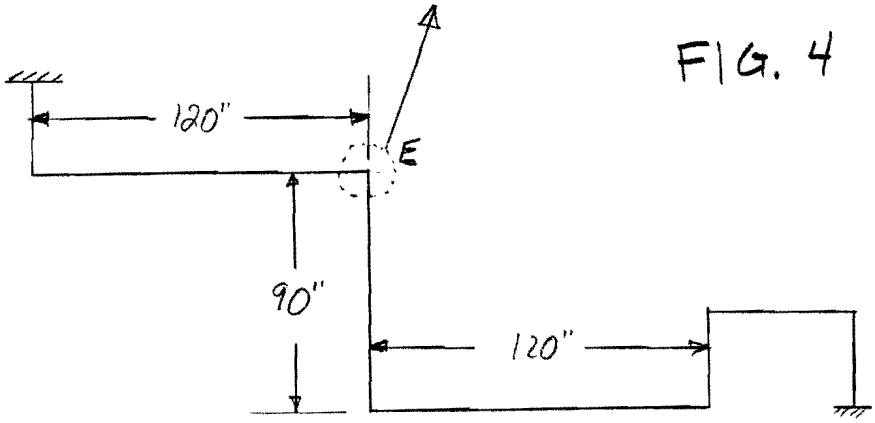
FIG. 4