DØ SOLENOID UPGRADE PROJECT

Thermal Contraction analysis for the DØ Solenoid Chimney

D-ZERO ENGINEERING NOTE # 3823.111 EN-349

September 30, 1993

Russ Rucinski
RD/DØ Mechanical Group

This engineering note documents the thermal contraction analysis that was done for the D-Zero solenoid chimney. The analysis was done as support of the "Design Report of the 2 Tesla Superconducting Solenoid for the Fermilab D0 Detector upgrade."

SUMMARY

The cryogenic LHE and LN2 lines were analyzed for combined pressure, thermal movement, and dead weight. The tubing was stress analyzed per ASME code for Pressure Piping, standard ANSI/ASME B31.3, for eight combinations of thermal loading. A commercial pipe stress analysis and design system by Algor® was used for the analysis. Stresses calculated were well below allowables. Based on the analysis, the cryogenic lines will be installed at an offset from the vacuum jacket centerline so that during steady state cold operation, the cryogenic lines will be in a proper location.

ANALYSIS

The chimney route as of this writing follows the path shown in Figure 1. The majority of the analysis was done almost a year earlier (11/92 thru 12/92) with a slightly different path. The difference in the path is in the longest inclined section. At the time of analysis it was thought that the chimney would be straight up the incline and then elbow at 90 degrees into the side of the control dewar. The analysis was done for that configuration. See Figures 2 and 3 for a sketch showing the route and the locations of the spider support guides for the cryogenic piping. The slight difference in the chimney path route will not significantly change the outcome of the analysis and therefore the results from the analysis that was done is still considered valid.

The analysis was done using Pipe Plus Pipe Stress Analysis and Design System software, version 4.50 from Algor® . This DOS application was borrowed from the RD/Mechanical support group. A copy of the application and case files used in the analysis can be found on the hard drive of the IBM machine in the D-Zero cryo control room. The computer is a Gateway 2000, model 4DX-33V with a Fermilab property number 78384. The files are on hard drive C:, directory PIPE. To run the software, run the file named PIPE.EXE. The software "file" menu will allow access to all case files. See table 1 for the cases. Cases 1,2 and 3 are saved under filename "CASE123". Cases 4 and 5 are saved as "CASE4&5".

For each case run, the results were from the combined effect of:

Dead Weight + Pressure + Thermal contraction + Displacement

*Dead Weight considered the pipe itself plus contents with S.G. = 1.0

*Pressure was always 150 psig.

*Thermal contraction was based on:
LN2 line cold was at -320 F.
LHe line cold was at -452 F.
Pipe materials were 1/2" & 3/4" O.D. aluminum tubing x 0.065" wall

TABLE 1: Thermal combinations considered and the maximum stresses from the analysis.The 8 combinations considered. W=warm, C=cold

CASES	LN2 LINE	LHe LINE	SOLENOID	Max. Stress
1	W	C	W	5.9 ksi @ HE7
2	W	C	C	6.0 ksi @ HE6
3	W	W	C	3.4 ksi @ HE3
4	C	C	C	3.7 ksi @ HE0b
5	C	C	W	3.5 ksi @ HE6
6	C	W	C	2.7 ksi @ TL6b
7	C	W	W	2.7 ksi @ TL6b
8	W	W	W	not applicable

*Displacement was used at anchor points. In cases when the solenoid was cold, the LHe anchor HE0a was displaced. See appendix for calculation of solenoid displacement. In cases 4 & 5 the support locations along the LHe line were displaced to account for the LN2 piping being displaced by thermal and dead weight loads.

Comments about the cases:
Case 1: Guides were used along the LHe line except at the ends which were anchors. The guides were considered fixed in space allowing the piping only to move axially. The anchor at HE0a was rigid in all directions. The anchor at HE9 was free to move, simulating built in flexibility in the control dewar.

Case 2: Modeled the same as Case 1 except displacement was added at the HE0a anchor due the solenoid contraction.

Case 3: Rather trivial case.

Case 4: Modeled conservatively by changing the guides along the LHe piping into anchors which were rigid except for allowing rotations of the pipe. The anchors were displaced by the amount the LN2 piping at each location was displaced. The LN2 piping was modeled with an anchor at each end and guides along the pipe. In addition, the anchor at HE0a was displaced due to the solenoid shrinkage.

Case 5: Modeled the same as case 4 except the anchor at HE0a was not displaced because the solenoid was warm.

Cases 6 & 7: The LN2 piping was modeled with an anchor at each end and guides along the pipe. The loading conditions for the LN2 piping for this case is identical to that in cases 4 & 5. Therefore a separate run was not made. The stresses and displacements for the LN2 piping in these cases can be read off the output of cases 4 & 5.

Case 8: Trivial case, not run.

Allowable:

The allowable stress used was derived from ANSI/ASME B31.3-1984 code. The allowable stress, SE, listed in Table A-1 is 8.0 ksi for 6061-T6 seamless pipe and tube that is welded.

The allowable stress for stresses due to displacement strains is calculated from section 302.3.5, Equation (1a) of the code. This stress is:

$$S_a = f\,(1.25\,S_c + 0.25\,S_h) = 1.0\,(1.25\{8.0\} + 0.25\{8.0\}) = \underline{12.0\text{ ksi}}$$

The Algor® piping analysis package prints out an allowable next to the system stress output that is 20.0 ksi. I do not agree with this value. I'm not exactly sure how the program calculated this because the allowable of 8.0 ksi was input by me as material data information. My feeling is that there is a mistake in the program such that instead of S_a simplifying out to be 1.5 S_c, (due to $S_c = S_h$), S_a simplified out to 2.5 S_c. I can easily see how this could happen if Equation (1a) was mistyped. Another possibility is that I am not interpreting the code to it's fullest extent. It is my judgement that the allowable stress to which the piping program output should be compared to is 12.0 ksi.

Results:

The output from the analysis is attached to this note. The output shows that the stresses calculated from any combination of thermal loading are well below the allowable of 12.0 ksi. It is also worth noting that the stresses are well distributed along the tubing runs.

The construction of the chimney is such that the LHe and LN2 tubing are built with a warm offset at various locations that enable the tubing to displace to a centered position during cryogenic operation. The output from the analysis determined the magnitude and location of these built in warm offsets. See Table 2.

TABLE 2: Built in offsets to compensate for thermal movement

Location	"X" Offset	"Y" Offset	"Z" Offset
TR6	+ 0.375 inches	-------	-------
TR7	- 0.350 inches	-------	+ 0.29 inches
HE6	+ 0.375 inches	-------	-------
HE7	- 0.350 inches	-------	+ 0.29 inches

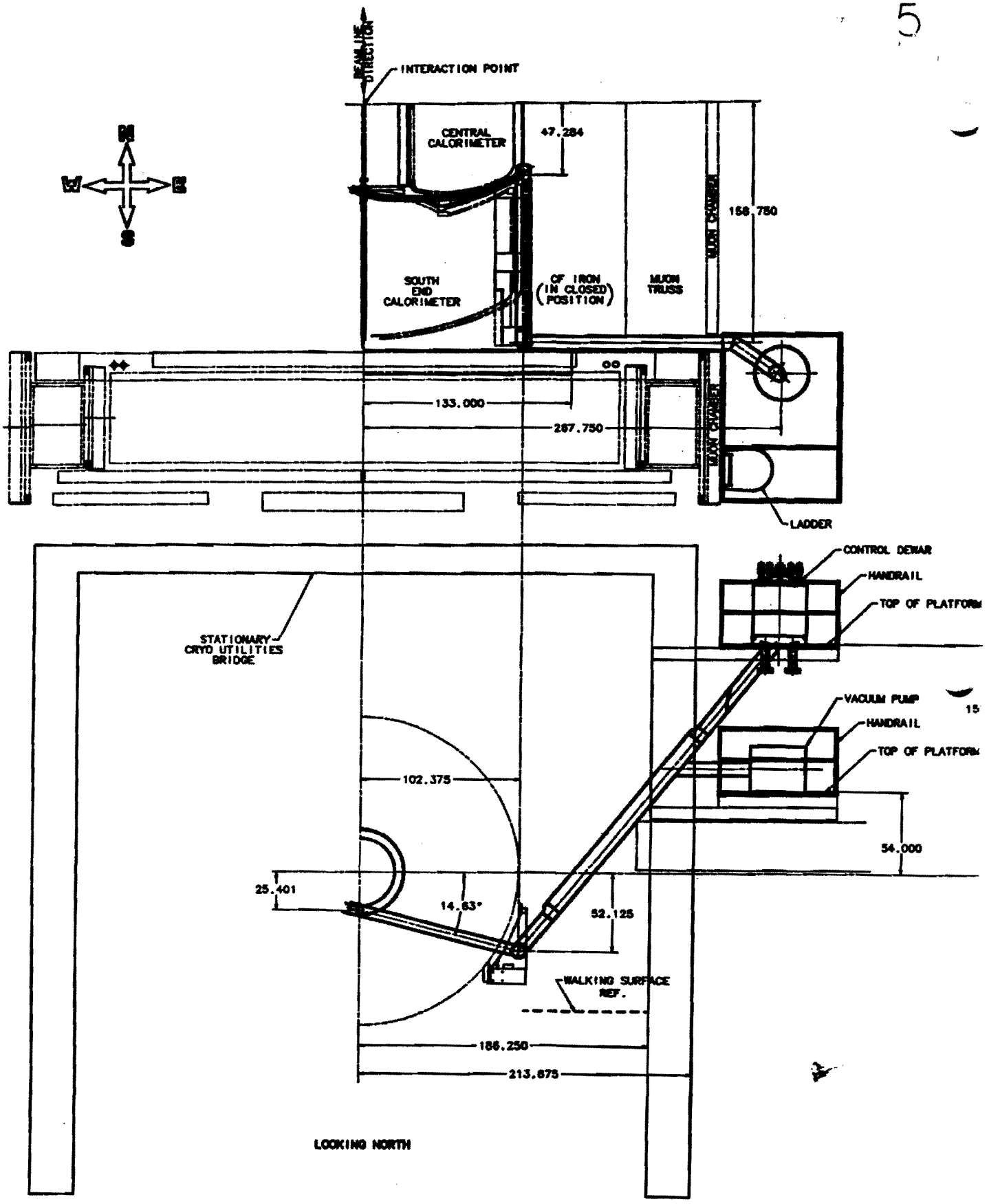

Figure 1-Chimney Routing

546707

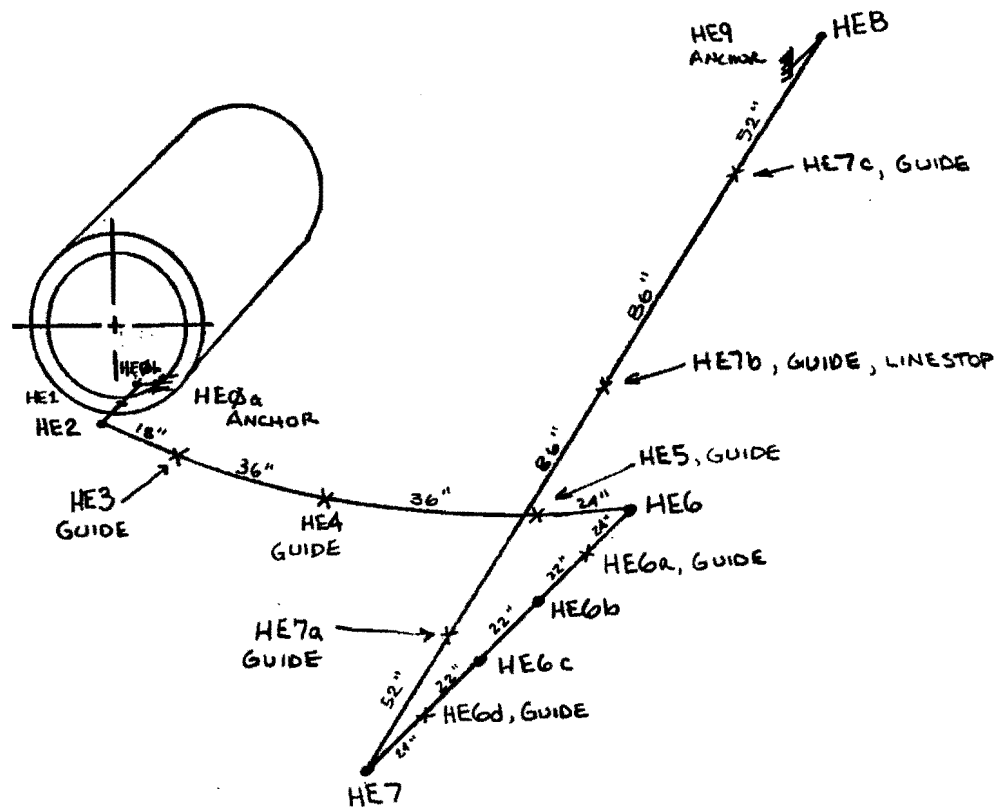

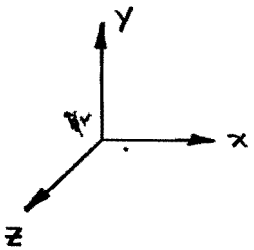

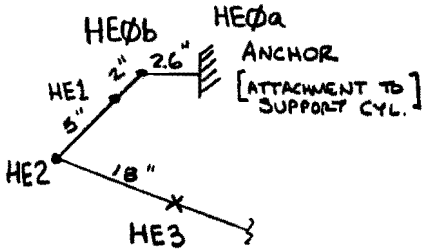

BLOW-UP NEAR SOLENOID

FIGURE 2

FERMILAB ENGINEERING NOTE

SUBJECT: SOLENOID CHIMNEY SUPPORTS LHe PIPING

SECTION: RD/DØ

PROJECT: DØ UPGRADE

SERIAL-CATEGORY: 3823.111

PAGE: 6

DATE: 11/8/93

NAME: RUSS RUCINSKI

REVISION DATE: 10/12/93

546707

FERMILAB ENGINEERING NOTE

SUBJECT: SOLENOID CHIMNEY SUPPORTS
LN_2 PIPING

SECTION: RD/DØ

PROJECT: DØ UPGRADE

SERIAL NUMBER: 3823.111

NAME: RUSS RUCINSKI

DATE: 1/8/93

REVISION DATE:

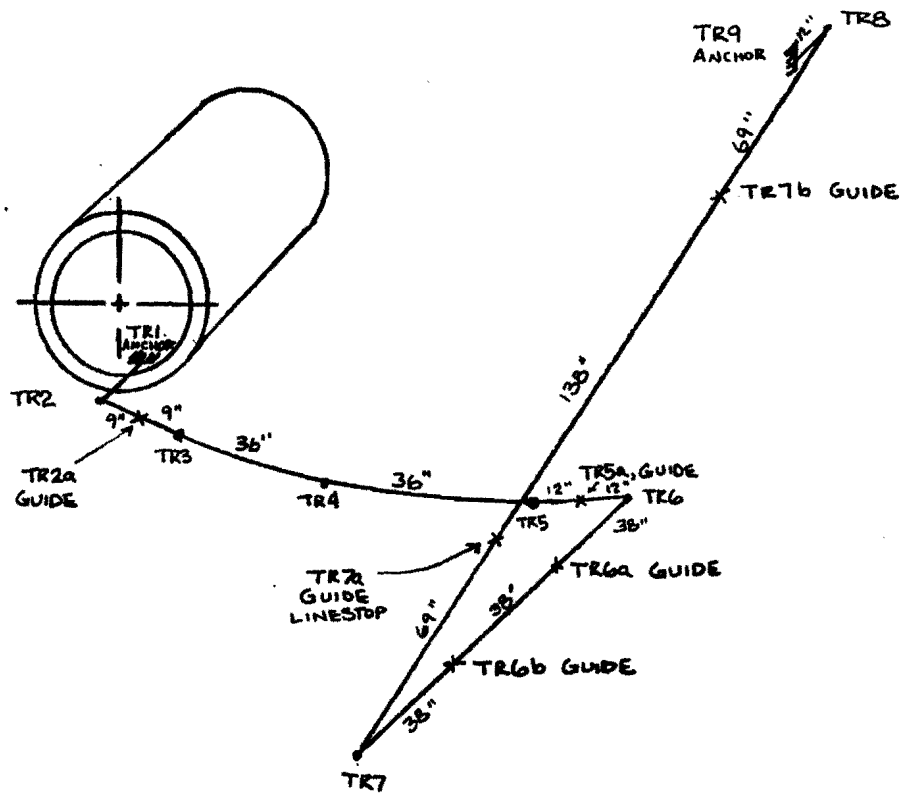

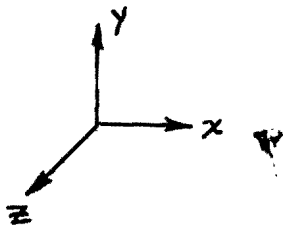

FIGURE 3

PIPEPLUS VERSION 4.50 FERMI NAT'L ACCELERATOR LAB 01/06/93 16:05

D-ZERO SOLENOID UPGRADE CHIMNEY DESIGN

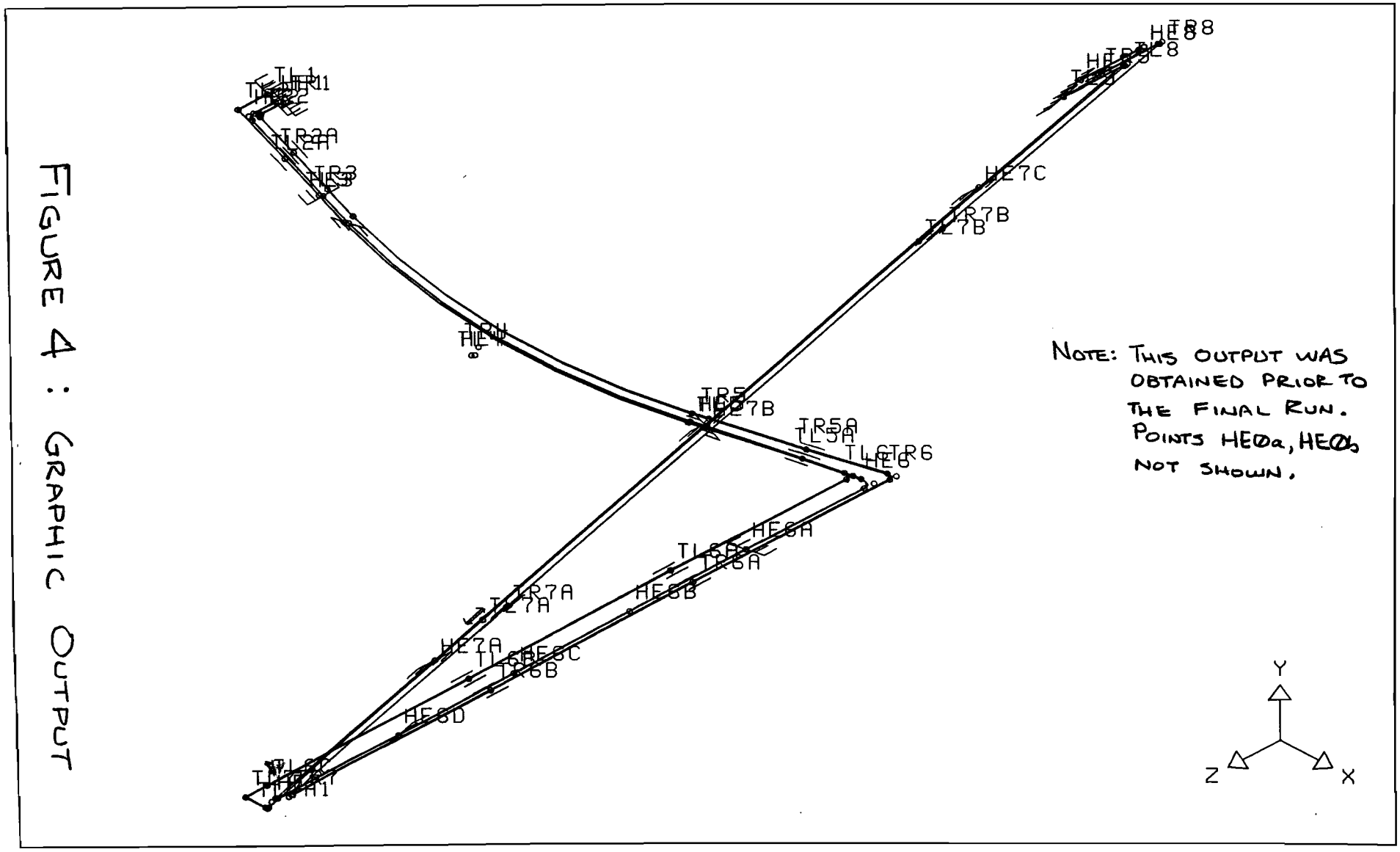

NOTE: THIS OUTPUT WAS OBTAINED PRIOR TO THE FINAL RUN. POINTS HE0a, HE0b NOT SHOWN.

FIGURE 4: GRAPHIC OUTPUT

File Name CASE123
Project ..... D-Zero Solenoid Upgrade CHIMNEY DESIGN
Department ..... Research Division/D-Zero Mechanical
Contract Number ..... Serial # 3823.111
Description ..... Liquid Nitrogen & Liquid Helium lines
Prepared by ..... Russ Rucinski
Checked by .....

ANSI code ..... ANSI B31.3
Input unit ..... English
Output unit ..... English
Output columns 80
Base temperature 70
F factor 1.0
E factor 1.33

Number of dynamic modes.. 0
Cut-off frequency ..... 0 Hz
Max no. of iterations ... 0
Convergence tolerance ... 0
Force tolerance ..... 0 lb

```
Frm Point    DX        DY        DZ      Radius        X          Y          Z
/To name   (feet)    (feet)    (feet)    (inch)    (feet)     (feet)     (feet)
--- ----- -------- -------- -------- -------- ---------- ---------- --------
  C Points HE0 thru HEn represent the LHe supply line.
  C Pt HE0 moves when the solenoid is cold. HE0a is attached
  c to the support cylinder.
  C
  C Points TR1 thru TRnn represent nodal points for the top right LN2 line.
  C The supports are spider type supports, LN2 shield to VJ.
  C At the solenoid, TR1 doesn't move when sol. is cold since sol. shield
  C    floats on panels supported off vacuum jacket.
  F TR1    0         0         0                        0.000      0.000      0.0
  T TR2    0         0         4.6373"  Short          0.000      0.000      0.3
  C The first support is placed midway between TR2 and TR3.
  T TR2a   8.2170"  -1.7687" 1.6338"                    0.685     -0.147      0.5
  T TR3    8.2170"  -1.7687" 1.6338"                    1.370     -0.295      0.6
  T TR4    35.1470" -7.5657" 6.9884"  89.1875           4.298     -0.925      1.2
  T TR5    28.5434" -6.1442" -14.557"                   6.677     -1.437      0.0
  C The second support is placed approx. midway between TR5 and TR6.
  T TR5a   12.1639" -2.6184" -6.0645"                   7.691     -1.655     -0.4
  C Point TR6 is moved 0.375" in +X to bring it to nominal location when col
  T TR6    11.0389" -2.2955" -6.0096" Long              8.611     -1.847     -0.9
  C Pt TR6a offset in X is compensates for TR6 dev. from nom. when warm.
  T TR6a   -0.375"  0        38.1782"                   8.579     -1.847      2.2
  T TR6b   0        0        38.1782"                   8.579     -1.847      5.3
  C Pt. TR7 is -.35" in X and +0.29" in Z to bring to nom. location when col
  T TR7    -0.35"   0        38.4682" Long              8.550     -1.847      8.5
  C Pt TR7a offset in X & Z compensates for TR7 deviation from nom. when war
  T TR7a   41.5738" 54.4685" -0.29"                    12.015      2.692      8.5
  T TR7b   82.6876" 108.937" 0                         18.905     11.770      8.5
  T TR8    41.3438" 54.4685" 0        Long              22.351     16.309      8.5
  T TR9    0        0        12"                       22.351     16.309      9.5
  F HE0a   -3.53"   1.913"   0                         -0.294      0.159      0.0
  T HE0b   -2.60"   0        0        Long             -0.511      0.159      0.0
  T HE1    0        0        2.03"                     -0.511      0.159      0.1
  T HE2    0        0        5.05166" Long             -0.511      0.159      0.5
  T HE3    17.7721" -3.8256" 3.53368"                   0.970     -0.159      0.8
  T HE4    35.3646" -7.6125" 7.03164" 89.875"           3.917     -0.794      1.4
  T HE5    28.7412" -6.1869" -14.658"                   6.312     -1.309      0.2
  C Pt HE6 is +0.375" longer in X to bring to nom. location when cold.
  T HE6    20.8721" -5.128"  -10.535" Long              8.052     -1.737     -0.6
  C Pt HE6a X offset is to compensate for HE6 deviation from nom. when warm.
  T HE6a   -.375"   0        24.0000"                   8.020     -1.737      1.3
  T HE6b   0        0        21.8808"                   8.020     -1.737      3.1
  T HE6c   0        0        21.8808"                   8.020     -1.737      5.0
  T HE6d   0        0        21.8808"                   8.020     -1.737      6.8
  C Pt HE7 is -.35" in X and +0.29" in Z to bring to nom. location when cold
  T HE7    -0.35"   0        24.2900" Long              7.991     -1.737      8.8
  C Pt HE7a offset in X is +.35" more than nom. and Z offset to compensate f
  C HE7 warm deviation from nominal location.
  T HE7a   31.3353" 40.8512" -0.29"                    10.603      1.668      8.8
  T HE7b   51.6422" 68.0854" 0                         14.906      7.341      8.8
  T HE7c   51.6422" 68.0854" 0                         19.210     13.015      8.8
  T HE8    30.9854" 40.8512" 0        Long              21.792     16.419      8.8
```

Frm /To	Point name	DX (feet)	DY (feet)	DZ (feet)	Radius (inch)	X (feet)	Y (feet)	Z (feet)
T	HE9	0	0	12"		21.792	16.419	9.8
C								
C	The points below, TLn represent the top left LN2 piping.							
F	TL1	-3.00"	0	0		-0.250	0.000	0.0
T	TL2	0	0	5.50"		-0.250	0.000	0.4
T	TL2a	10.8932"	-2.3449"	2.16594"		0.658	-0.195	0.6
T	TL3	8.2170"	-1.7687"	1.6338"		1.343	-0.343	0.7
T	TL4	35.5822"	-7.6593"	7.07489"	90.5625"	4.308	-0.981	1.3
T	TL5	28.9401"	-6.2296"	-14.760"		6.719	-1.500	0.1
T	TL5a	12.1639"	-2.6184"	-6.0645"		7.733	-1.718	-0.3
C	Pt. TL6 is moved +.375" in X to bring it to nominal when cold.							
T	TL6	6.3751"	-1.5456"	-3.2267"	Long	8.264	-1.847	-0.6
C	Pt. TL6a X offset is to compensate for TL6 dev. from nom. when warm.							
T	TL6a	-.375"	0	34.118"		8.233	-1.847	2.2
T	TL6b	0	0	38.1782"		8.233	-1.847	5.3
C	Pt. TL6c is -.35" in X and +.29" in Z to bring to nom. location when col							
T	TL6c	-0.35"	0	38.4682"		8.204	-1.847	8.5
C	A jog using pt. TL7 and TL7a1 was required to maintain the correct spaci							
C	of the LN2 lines.							
T	TL7	0	0	4.16"		8.204	-1.847	8.9
T	TL7a1	4.16"	0	0	Long	8.551	-1.847	8.9
T	TL7a	41.5738"	54.4685"	0		12.015	2.692	8.9
T	TL7b	82.6876"	108.937"	0		18.906	11.770	[illegible]
C	Pt TL8 was stopped short by 5% to approximate actual piping relationship							
T	TL8	39.2766"	51.7451"	0	Long	22.179	16.082	8.9
T	TL9	0	0	12"		22.179	16.082	9.9

Point	Data	Description
TR1	Pipe	Pipe data identifier = 1/2
		Nominal Diameter = 1/2
		Pipe Schedule =
		Actual Pipe O. D. = .500 inch
		Wall Thickness = 0.065 inch
		Corrosion Allowance = 0 inch
		Insulation Thickness = 0 inch
		Insulation Density = 0 lb/cu.ft
		Content S. G. = 1.0
	Material	Data Identifier = AL
		Aluminum, aluminum alloys
		Density = 0.0978 lb/cu.inch

Tempera. (deg.F)	Modulus (psi)	Expansion (inch/inch)
-325.	11300000	-0.00390
-150.	11100000	-0.00240
-50.	10900000	-0.00139
70.	10600000	0.00000
200.	10400000	0.00167
300.	10200000	0.00306
400.	9500000	0.00449
500.	8500000	0.00598

Temperature (deg.F)	Allowable stresses (psi)
-320	8000.

Load data identifier = LN2

Case No.	Temperature (deg.F)	Pressure (psig)	Expansion (inch/inch)
1	70	150	0.000000
2	70	150	0.000000
3	70	150	0.000000

Anchor: Rigid in all directions

Initial displacement (inch,degree) :

Case 1, translational X = 0 inch
Case 1, translational Y = 0 inch
Case 1, translational Z = 0 inch
Case 1, rotational X = 0 degree
Case 1, rotational Y = 0 degree
Case 1, rotational Z = 0 degree
Case 2, translational X = 0 inch
Case 2, translational Y = 0 inch
Case 2, translational Z = 0 inch
Case 2, rotational X = 0 degree
Case 2, rotational Y = 0 degree
Case 2, rotational Z = 0 degree
Case 3, translational X = 0 inch
Case 3, translational Y = 0 inch
Case 3, translational Z = 0 inch
Case 3, rotational X = 0 degree
Case 3, rotational Y = 0 degree
Case 3, rotational Z = 0 degree

TR2

```
Point  Data     Description
-----  -------- ---------------------------------------------------
TR2a   Guide
TR3
TR4
TR5
TR5a   Guide
TR6
TR6a   Guide
TR6b   Guide
TR7
TR7a   Line stop
       Guide
TR7b   Guide
TR8
TR9    Anchor   Translational stiffness (lb/inch) :
                X=FREE     Y=FREE     Z=FREE
                Rotational stiffness (lb-inch/deg) :
                X=FREE     Y=FREE     Z=FREE
                Initial displacement (inch,degree) :
                Case 1, translational X = 0        inch
                Case 1, translational Y = 0        inch
                Case 1, translational Z = 0        inch
                Case 1, rotational X = 0        degree
                Case 1, rotational Y = 0        degree
                Case 1, rotational Z = 0        degree
                Case 2, translational X = 0        inch
                Case 2, translational Y = 0        inch
                Case 2, translational Z = 0        inch
                Case 2, rotational X = 0        degree
                Case 2, rotational Y = 0        degree
                Case 2, rotational Z = 0        degree
                Case 3, translational X = 0        inch
                Case 3, translational Y = 0        inch
                Case 3, translational Z = 0        inch
                Case 3, rotational X = 0        degree
                Case 3, rotational Y = 0        degree
                Case 3, rotational Z = 0        degree
                Free Y restraint during hanger design
HE0a   Pipe     Pipe data identifier = 3/4
                Nominal Diameter = 3/4
                Pipe Schedule =
                Actual Pipe O. D. = 0.750    inch
                Wall Thickness = 0.065    inch
                Corrosion Allowance = 0        inch
                Insulation Thickness = 0        inch
                Insulation Density = 0        lb/cu.ft
                Content S. G. = 1.0
       Material Data Identifier = AL
       Load     Load data identifier = LHE
                Case  Temperature  Pressure   Expansion
                 No.   (deg.F)     (psig    ) (inch/inch)
                  1      -452        150       -0.003900
                  2      -452        150       -0.003900
```

```
Point  Data     Description
-----  -------- ---------------------------------------------------
                  3      70          150       0.000000
       Anchor   Rigid in all directions
                Initial displacement (inch,degree) :
                Case 1, translational X = 0.000    inch
                Case 1, translational Y = 0.000    inch
                Case 1, translational Z = 0.000    inch
                Case 1, rotational X = 0        degree
                Case 1, rotational Y = 0        degree
                Case 1, rotational Z = 0        degree
                Case 2, translational X = 0.000    inch
                Case 2, translational Y = 0.1120   inch
                Case 2, translational Z = 0.000    inch
                Case 2, rotational X = 0        degree
                Case 2, rotational Y = 0        degree
                Case 2, rotational Z = 0        degree
                Case 3, translational X = 0.000    inch
                Case 3, translational Y = 0.1120   inch
                Case 3, translational Z = 0.000    inch
                Case 3, rotational X = 0        degree
                Case 3, rotational Y = 0        degree
                Case 3, rotational Z = 0        degree
HE0b
HE1
HE2
HE3    Guide
HE4    Guide
HE5    Guide
HE6
HE6a   Guide
HE6b
HE6c
HE6d   Guide
HE7
HE7a   Guide
HE7b   Line stop
       Guide
HE7c   Guide
HE8
HE9    Anchor   Translational stiffness (lb/inch) :
                X=FREE     Y=FREE     Z=FREE
                Rotational stiffness (lb-inch/deg) :
                X=FREE     Y=FREE     Z=FREE
                Initial displacement (inch,degree) :
                Case 1, translational X = 0        inch
                Case 1, translational Y = 0        inch
                Case 1, translational Z =  0       inch
                Case 1, rotational X = 0        degree
                Case 1, rotational Y = 0        degree
                Case 1, rotational Z = 0        degree
                Case 2, translational X = 0        inch
                Case 2, translational Y = 0        inch
                Case 2, translational Z = 0        inch
```

Point	Data	Description
		Case 2, rotational X = 0 degree
		Case 2, rotational Y = 0 degree
		Case 2, rotational Z = 0 degree
		Case 3, translational X = 0 inch
		Case 3, translational Y = 0 inch
		Case 3, translational Z = 0 inch
		Case 3, rotational X = 0 degree
		Case 3, rotational Y = 0 degree
		Case 3, rotational Z = 0 degree
		Free Y restraint during hanger design
TL1	Pipe	Pipe data identifier = 1/2
	Material	Data Identifier = AL
	Load	Load data identifier = LN2
	Anchor	Rigid in all directions
		Initial displacement (inch,degree) :
		Case 1, translational X = 0 inch
		Case 1, translational Y = 0 inch
		Case 1, translational Z = 0 inch
		Case 1, rotational X = 0 degree
		Case 1, rotational Y = 0 degree
		Case 1, rotational Z = 0 degree
		Case 2, translational X = 0 inch
		Case 2, translational Y = 0 inch
		Case 2, translational Z = 0 inch
		Case 2, rotational X = 0 degree
		Case 2, rotational Y = 0 degree
		Case 2, rotational Z = 0 degree
		Case 3, translational X = 0 inch
		Case 3, translational Y = 0 inch
		Case 3, translational Z = 0 inch
		Case 3, rotational X = 0 degree
		Case 3, rotational Y = 0 degree
		Case 3, rotational Z = 0 degree
TL2		
TL2a	Guide	
TL3		
TL4		
TL5		
TL5a	Guide	
TL6		
TL6a	Guide	
TL6b	Guide	
TL6c		
TL7		
TL7a1		
TL7a	Line stop	
	Guide	
TL7b	Guide	
TL8		

Point	Data	Description
TL9	Anchor	Translational stiffness (lb/inch) :
		X=Free Y=Free Z=Free
		Rotational stiffness (lb-inch/deg) :
		X=Free Y=Free Z=Free
		Initial displacement (inch,degree) :
		Case 1, translational X = 0 inch
		Case 1, translational Y = 0 inch
		Case 1, translational Z = 0 inch
		Case 1, rotational X = 0 degree
		Case 1, rotational Y = 0 degree
		Case 1, rotational Z = 0 degree
		Case 2, translational X = 0 inch
		Case 2, translational Y = 0 inch
		Case 2, translational Z = 0 inch
		Case 2, rotational X = 0 degree
		Case 2, rotational Y = 0 degree
		Case 2, rotational Z = 0 degree
		Case 3, translational X = 0 inch
		Case 3, translational Y = 0 inch
		Case 3, translational Z = 0 inch
		Case 3, rotational X = 0 degree
		Case 3, rotational Y = 0 degree
		Case 3, rotational Z = 0 degree
		Free Y restraint during hanger design

Case number	Combination
1	D.W. + Pres1 + Ther1 + Disp1
2	D.W. + Pres2 + Ther2 + Disp2
3	D.W. + Pres3 + Ther3 + Disp3

*** Support Summary ***

Point Name	Global Direction	Forces/lb or Moments/inch-lb Sustained Max	Sustained Min	Expansion Max	Expansion Min	Occasion.	Total Max	Total Min
TR1	Fx	1	0	0	0	0	1	
	Fy	1	0	0	0	0	1	
	Fz	0	0	0	0	0	0	
	My	2	0	0	0	0	2	
	Mz	1	0	0	0	0	1	
TR5a	Fz	0	0	0	0	0	0	
TR6b	Fx	0	0	0	0	0	0	
	Fz	0	0	0	0	0	0	
TR7a	Fx	1	0	0	0	0	1	
TR7b	Fx	1	0	0	0	0	1	
TR9	Fx	0	0	0	0	0	0	
	Fz	0	0	0	0	0	0	
HE0a	Fx	0	0	4	-1	0	5	
	Fy	-1	0	0	-6	0	-1	
	Fz	0	0	3	-0	0	4	
	Mx	2	0	44	0	0	46	
	My	2	0	14	-6	0	17	
	Mz	1	0	2	-18	0	3	
HE3	Fx	0	0	4	0	0	4	
	Fy	1	0	17	0	0	18	
	Fz	-0	0	1	-2	0	1	
HE4.Near	Fx	-0	0	0	-2	0	-0	
	Fy	-2	0	0	-13	0	-2	
	Fz	-0	0	0	-3	0	-0	
HE5	Fx	-0	0	2	0	0	2	
	Fz	0	0	4	-0	0	4	
HE6a	Fx	-0	0	0	-9	0	-0	
	Fy	-1	0	0	-0	0	-1	
HE6d	Fx	0	0	7	0	0	7	
	Fy	-2	0	7	-0	0	6	
	Fz	0	0	0	0	0	0	
HE7a	Fx	1	0	0	-0	0	1	
	Fz	0	0	0	-3	0	0	
HE7b	Fx	-3	0	0	-4	0	-3	
	Fy	-4	0	0	-6	0	-4	
HE7b	Fx	1	0	0	0	0	1	
	Fy	-1	0	0	-0	0	-1	
	Fz	-0	0	0	-0	0	0	
HE7c	Fx	1	0	0	0	0	1	
	Fy	-1	0	0	-0	0	-1	
	Fz	-0	0	0	-0	0	-0	
HE9	Fx	0	0	0	-0	0	0	
	Fy	-0	0	0	-0	0	-0	
	Fz	0	0	0	-0	0	0	
	Mx	-0	0	0	-0	0	-0	
	My	-0	0	0	-0	0	-0	
	Mz	-0	0	0	-0	0	-0	

*** Support Summary ***

Point Name	Global Direction	Forces/lb or Moments/inch-lb Sustained Max	Sustained Min	Expansion Max	Expansion Min	Occasion.	Total Max	Mi
TL1	Fx	1	0	0	0	0	1	
	Fy	1	0	0	0	0	1	
	Fz	0	0	0	0	0	0	
	My	2	0	0	0	0	2	
	Mz	1	0	0	0	0	1	
TL5a	Fz	0	0	0	0	0	0	
TL6b	Fx	0	0	0	0	0	0	
	Fz	0	0	0	0	0	0	
TL7a	Fx	1	0	0	0	0	1	
TL7b	Fx	1	0	0	0	0	1	
TL9	Fx	0	0	0	0	0	0	
	Fz	0	0	0	0	0	0	

ad : Dead Weight + Pressure 1 + Thermal 1 + Displacement 1

*** System Deflections ***

Point Name	Displacements/inch X	Y	Z	Rotations/degree X	Y	Z
TR1	0.000	0.000	0.000	-0.000	0.000	0.000
TR2.Near	0.000	0.001	0.000	-0.021	0.005	0.016
TR2.Far	0.000	0.001	0.000	-0.019	0.002	0.018
TR2a	0.000	-0.000	0.000	0.035	0.003	-0.075
TR3	-0.005	-0.025	-0.004	0.106	0.016	-0.234
TR4.Near	-0.010	-0.056	-0.008	0.146	0.017	-0.290
TR4.Far	-0.015	-0.102	-0.017	0.305	-0.108	0.235
TR5	-0.011	-0.087	-0.015	0.303	-0.108	0.249
TR5a	0.012	-0.002	-0.006	0.249	-0.094	0.241
TR6.Near	0.027	0.055	-0.000	0.196	-0.066	0.204
TR6.Far	0.027	0.057	0.000	0.191	-0.059	0.205
TR6a	-0.000	-0.000	0.000	-0.011	-0.057	0.229
TR6b	-0.000	-0.000	0.000	0.122	0.163	0.256
TR7.Near	0.214	-0.163	0.002	0.263	0.383	0.277
TR7.Far	0.216	-0.165	0.002	0.262	0.379	0.278
TR7a	0.000	-0.000	-0.000	0.142	0.173	-0.141
TR7b	-0.000	-0.000	-0.000	-0.169	-0.211	0.131
TR8.Near	0.229	-0.174	0.008	-0.281	-0.433	-0.294
R8.Far	0.227	-0.173	0.009	-0.282	-0.438	-0.292
R9	0.139	-0.117	0.009	-0.285	-0.447	-0.282
HE0a	0.000	-0.000	0.000	0.000	0.000	0.000
HE0b.Near	0.006	-0.000	0.000	0.008	0.014	0.002
HE0b.Far	0.011	-0.000	-0.004	0.020	0.035	0.005
HE1	0.011	-0.001	-0.007	0.022	0.036	0.004
HE2.Near	0.013	-0.002	-0.023	0.022	0.006	0.002
HE2.Far	0.009	-0.002	-0.027	0.013	-0.053	0.000
HE3	-0.062	0.013	-0.012	0.027	-0.056	0.016
HE4.Near	-0.085	0.018	-0.017	0.060	0.039	-0.012
HE4.Far	-0.253	0.053	0.102	0.073	-0.560	0.126
HE5	-0.249	0.061	0.126	0.071	-0.590	0.140
HE6.Near	-0.232	0.162	0.307	0.217	-0.049	0.203
HE6.Far	-0.232	0.163	0.298	0.305	0.321	0.196
HE6a	-0.000	-0.000	0.216	0.505	0.495	0.130
HE6b	0.048	-0.182	0.130	0.362	-0.139	0.066
HE6c	-0.029	-0.224	0.045	-0.196	-0.164	0.001
HE6d	0.001	0.000	-0.040	-1.003	0.420	-0.064
HE7.Near	0.242	0.462	-0.127	-0.945	0.472	-0.115
HE7.Far	0.249	0.474	-0.148	-0.715	0.295	-0.117
HE7a	0.201	0.265	-0.000	0.182	-0.443	-0.100
HE7b	-0.000	-0.000	0.000	-0.271	-0.174	0.065
HE7c	-0.201	-0.266	-0.000	-0.193	-0.307	-0.160
HE8.Near	-0.106	-0.583	-0.010	-0.296	-0.273	-0.350
HE8.Far	-0.109	-0.585	-0.016	-0.308	-0.266	-0.349
HE9	-0.159	-0.525	-0.058	-0.322	-0.259	-0.346
TL1	0.000	0.000	0.000	-0.000	0.000	0.000
TL2	0.001	0.002	0.000	-0.025	0.006	0.025
TL2a	0.000	-0.000	0.000	0.044	0.004	-0.101
TL3	-0.005	-0.031	-0.004	0.114	0.019	-0.274

Load : Dead Weight + Pressure 1 + Thermal 1 + Displacement 1

*** System Deflections ***

Point Name	Displacements/inch X	Y	Z	Rotations/degree X	Y	Z
TL4.Near	-0.012	-0.066	-0.009	0.151	0.021	-0.336
TL4.Far	-0.019	-0.126	-0.017	0.285	-0.107	0.308
TL5	-0.015	-0.109	-0.015	0.283	-0.107	0.331
TL5a	0.013	-0.003	-0.006	0.230	-0.085	0.383
TL6.Near	0.025	0.042	-0.004	0.195	-0.066	0.377
TL6.Far	0.026	0.047	-0.004	0.187	-0.058	0.379
TL6a	-0.000	-0.000	-0.004	-0.026	-0.069	0.400
TL6b	0.000	-0.000	-0.004	0.183	0.210	0.427
TL6c	0.295	-0.257	-0.001	0.428	0.546	0.446
TL7	0.335	-0.288	-0.001	0.424	0.537	0.447
TL7a1.Nea	0.335	-0.259	-0.037	0.420	0.526	0.447
TL7a1.Far	0.333	-0.254	-0.040	0.419	0.523	0.447
TL7a	0.000	-0.000	-0.000	0.277	0.314	-0.075
TL7b	-0.000	-0.000	-0.000	-0.061	-0.063	0.143
TL8.Near	0.187	-0.143	0.007	-0.166	-0.281	-0.268
TL8.Far	0.186	-0.142	0.008	-0.166	-0.287	-0.267
TL9	0.128	-0.109	0.008	-0.171	-0.299	-0.257

Load : Dead Weight + Pressure 1 + Thermal 1 + Displacement 1

*** System Stresses (ANSI B31.3) ***

Point Name	In-Plane SIF	Out Plane SIF	Section Modulus	Stresses/psi Hoop	Longitu.	Principal	Code	Allow.
TR1	1.00	1.00	0.01	517	732	751	839	20000
TR2.Near	1.15	1.00	0.01	517	287	534	394	20000
TR2.Far	1.15	1.00	0.01	517	276	538	383	20000
TR2a	1.00	1.00	0.01	517	1406	1412	1513	20000
TR3	1.00	1.00	0.01	517	833	850	940	20000
TR4.Near	1.00	1.00	0.01	517	475	573	582	20000
TR4.Far	1.00	1.00	0.01	517	452	553	559	20000
TR5	1.00	1.00	0.01	517	372	538	478	20000
TR5a	1.00	1.00	0.01	517	637	656	744	20000
TR6.Near	1.00	1.00	0.01	517	303	529	410	20000
TR6.Far	1.00	1.00	0.01	517	348	518	455	20000
TR6a	1.00	1.00	0.01	517	315	518	422	20000
TR6b	1.00	1.00	0.01	517	1166	1167	1273	20000
TR7.Near	1.00	1.00	0.01	517	299	517	406	20000
TR7.Far	1.00	1.00	0.01	517	233	530	340	20000
TR7a	1.00	1.00	0.01	517	1435	1439	1590	20000
TR7b	1.00	1.00	0.01	517	1469	1473	1594	20000
TR8.Near	1.00	1.00	0.01	517	257	532	367	20000
TR8.Far	1.00	1.00	0.01	517	314	518	422	20000
TR9	1.00	1.00	0.01	517	243	518	350	20000
HE0a	1.00	1.00	0.02	805	1065	1125	1236	20000
HE0b.Near	1.23	1.02	0.02	805	935	1022	1105	20000
HE0b.Far	1.23	1.02	0.02	805	595	806	683	20000
HE1	1.00	1.00	0.02	805	507	806	643	20000
HE2.Near	1.23	1.02	0.02	805	1490	1490	1576	20000
HE2.Far	1.23	1.02	0.02	805	1612	1613	1689	20000
HE3	1.00	1.00	0.02	805	1392	1393	1475	20000
HE4.Near	1.00	1.00	0.02	805	1719	1720	1945	20000
HE4.Far	1.00	1.00	0.02	805	1389	1391	1747	20000
HE5	1.00	1.00	0.02	805	1280	1282	1760	20000
HE6.Near	1.23	1.02	0.02	805	5666	5666	5738	20000
HE6.Far	1.23	1.02	0.02	805	5449	5451	5568	20000
HE6a	1.00	1.00	0.02	805	3337	3339	3690	20000
HE6b	1.00	1.00	0.02	805	1931	1936	2104	20000
HE6c	1.00	1.00	0.02	805	2761	2764	2861	20000
HE6d	1.00	1.00	0.02	805	4292	4293	5090	20000
HE7.Near	1.23	1.02	0.02	805	5334	5334	5523	20000
HE7.Far	1.23	1.02	0.02	805	5719	5719	5857	20000
HE7a	1.00	1.00	0.02	805	1562	1562	2048	20000
HE7b	1.00	1.00	0.02	805	782	815	1087	20000
HE7c	1.00	1.00	0.02	805	1146	1147	1336	20000
HE8.Near	1.23	1.02	0.02	805	581	807	830	20000
HE8.Far	1.23	1.02	0.02	805	567	806	808	20000
HE9	1.00	1.00	0.02	805	343	806	453	20000
TL1	1.00	1.00	0.01	517	722	751	829	20000
TL2	1.00	1.00	0.01	517	364	541	471	20000
TL2a	1.00	1.00	0.01	517	1493	1498	1600	20000

Load : Dead Weight + Pressure 1 + Thermal 1 + Displacement 1

*** System Stresses (ANSI B31.3) ***

Point Name	In-Plane SIF	Out Plane SIF	Section Modulus	Stresses/psi Hoop	Longitu.	Principal	Code	Allow.
TL3	1.00	1.00	0.01	517	885	897	992	20000
TL4.Near	1.00	1.00	0.01	517	503	576	610	20000
TL4.Far	1.00	1.00	0.01	517	607	668	714	20000
TL5	1.00	1.00	0.01	517	535	620	641	20000
TL5a	1.00	1.00	0.01	517	439	580	546	20000
TL6.Near	1.00	1.00	0.01	517	321	555	428	20000
TL6.Far	1.00	1.00	0.01	517	424	519	530	20000
TL6a	1.00	1.00	0.01	517	405	518	512	20000
TL6b	1.00	1.00	0.01	517	1497	1497	1604	20000
TL6c	1.00	1.00	0.01	517	251	517	358	20000
TL7	1.00	1.00	0.01	517	328	517	435	20000
TL7a1.Nea	1.00	1.00	0.01	517	322	519	429	20000
TL7a1.Far	1.00	1.00	0.01	517	241	532	347	20000
TL7a	1.00	1.00	0.01	517	1532	1536	1687	20000
TL7b	1.00	1.00	0.01	517	1410	1414	1534	20000
TL8.Near	1.00	1.00	0.01	517	255	532	365	20000
TL8.Far	1.00	1.00	0.01	517	318	518	425	20000
TL9	1.00	1.00	0.01	517	222	518	329	2000

*** System Maxima ***

Maximum X displacement = 0.335 inch at point TL7a1.Nea
Maximum Y displacement = -0.585 inch at point HE8.Far
Maximum Z displacement = 0.307 inch at point HE6.Near

Maximum X rotation = -1.003 degree at point HE6d
Maximum Y rotation = -0.590 degree at point HE5
Maximum Z rotation = 0.447 degree at point TL7

Maximum X force = -7 lb at point HE5
Maximum Y force = 9 lb at point HE7b
Maximum Z force = -4 lb at point HE0a

Maximum X moment = 76 inch-lb at point HE7.Far
Maximum Y moment = 93 inch-lb at point HE6.Near
Maximum Z moment = -18 inch-lb at point HE7c

Maximum hoop stress = 805 psi at point HE0a
Maximum longitudinal stress = 5719 psi at point HE7.Far
Maximum principal stress = 5719 psi at point HE7.Far
Maximum code stress = 5857 psi at point HE7.Far
Maximum stress ratio (code/allowable) = 0.29 at point HE7.Far

Load : Dead Weight + Pressure 2 + Thermal 2 + Displacement 2

*** System Deflections ***

Point Name	Displacements/inch X	Y	Z	Rotations/degree X	Y	Z
TR1	0.000	0.000	0.000	-0.000	0.000	0.000
TR2.Near	0.000	0.001	0.000	-0.021	0.005	0.016
TR2.Far	0.000	0.001	0.000	-0.019	0.002	0.018
TR2a	0.000	-0.000	0.000	0.035	0.003	-0.075
TR3	-0.005	-0.025	-0.004	0.106	0.016	-0.234
TR4.Near	-0.010	-0.056	-0.008	0.146	0.017	-0.290
TR4.Far	-0.015	-0.102	-0.017	0.305	-0.108	0.235
TR5	-0.011	-0.087	-0.015	0.303	-0.108	0.249
TR5a	0.012	-0.002	-0.006	0.249	-0.094	0.241
TR6.Near	0.027	0.055	-0.000	0.196	-0.066	0.204
TR6.Far	0.027	0.057	0.000	0.191	-0.059	0.205
TR6a	-0.000	-0.000	0.000	-0.011	-0.057	0.229
TR6b	-0.000	-0.000	0.000	0.122	0.163	0.256
TR7.Near	0.214	-0.163	0.002	0.263	0.383	0.277
TR7.Far	0.216	-0.165	0.002	0.262	0.379	0.278
TR7a	0.000	-0.000	-0.000	0.142	0.173	-0.141
TR7b	-0.000	-0.000	-0.000	-0.169	-0.211	0.131
TR8.Near	0.229	-0.174	0.008	-0.281	-0.433	-0.294
TR8.Far	0.227	-0.173	0.009	-0.282	-0.438	-0.29[illegible]
TR9	0.139	-0.117	0.009	-0.285	-0.447	-0.282
HE0a	0.000	0.112	0.000	0.000	0.000	-0.000
HE0b.Near	0.006	0.112	0.000	0.058	0.008	-0.019
HE0b.Far	0.010	0.111	-0.004	0.140	0.015	-0.064
HE1	0.011	0.108	-0.008	0.161	0.012	-0.089
HE2.Near	0.011	0.094	-0.024	0.213	-0.023	-0.202
HE2.Far	0.005	0.087	-0.028	0.228	-0.085	-0.263
HE3	-0.083	0.018	-0.017	0.164	-0.081	-0.046
HE4.Near	-0.107	0.023	-0.021	0.159	0.016	0.043
HE4.Far	-0.271	0.058	0.110	0.096	-0.582	0.107
HE5	-0.267	0.066	0.135	0.093	-0.610	0.123
HE6.Near	-0.250	0.166	0.315	0.231	-0.028	0.199
HE6.Far	-0.250	0.168	0.306	0.319	0.357	0.192
HE6a	-0.000	-0.000	0.224	0.512	0.535	0.126
HE6b	0.057	-0.183	0.138	0.364	-0.134	0.060
HE6c	-0.023	-0.226	0.053	-0.199	-0.177	-0.006
HE6d	0.000	0.000	-0.032	-1.010	0.404	-0.072
HE7.Near	0.237	0.466	-0.119	-0.957	0.462	-0.123
HE7.Far	0.244	0.478	-0.140	-0.729	0.287	-0.125
HE7a	0.201	0.265	-0.000	0.168	-0.450	-0.105
HE7b	-0.000	-0.000	0.000	-0.277	-0.185	0.066
HE7c	-0.201	-0.266	-0.000	-0.200	-0.316	-0.161
HE8.Near	-0.105	-0.584	-0.010	-0.302	-0.281	-0.352
HE8.Far	-0.108	-0.586	-0.016	-0.314	-0.275	-0.351
HE9	-0.159	-0.524	-0.058	-0.329	-0.267	-0.34[illegible]
TL1	0.000	0.000	0.000	-0.000	0.000	0.0[illegible]
TL2	0.001	0.002	0.000	-0.025	0.006	0.025
TL2a	0.000	-0.000	0.000	0.044	0.004	-0.101
TL3	-0.005	-0.031	-0.004	0.114	0.019	-0.274

Load : Dead Weight + Pressure 2 + Thermal 2 + Displacement 2

*** System Deflections ***

Point Name	Displacements/inch X	Y	Z	Rotations/degree X	Y	Z
TL4.Near	-0.012	-0.066	-0.009	0.151	0.021	-0.336
TL4.Far	-0.019	-0.126	-0.017	0.285	-0.107	0.308
TL5	-0.015	-0.109	-0.015	0.283	-0.107	0.331
TL5a	0.013	-0.003	-0.006	0.230	-0.085	0.383
TL6.Near	0.025	0.042	-0.004	0.195	-0.066	0.377
TL6.Far	0.026	0.047	-0.004	0.187	-0.058	0.379
TL6a	-0.000	-0.000	-0.004	-0.026	-0.069	0.400
TL6b	0.000	-0.000	-0.004	0.183	0.210	0.427
TL6c	0.295	-0.257	-0.001	0.428	0.546	0.446
TL7	0.335	-0.288	-0.001	0.424	0.537	0.447
TL7a1.Nea	0.335	-0.259	-0.037	0.420	0.526	0.447
TL7a1.Far	0.333	-0.254	-0.040	0.419	0.523	0.447
TL7a	0.000	-0.000	-0.000	0.277	0.314	-0.075
TL7b	-0.000	-0.000	-0.000	-0.061	-0.063	0.143
TL8.Near	0.187	-0.143	0.007	-0.166	-0.281	-0.268
TL8.Far	0.186	-0.142	0.008	-0.166	-0.287	-0.267
TL9	0.128	-0.109	0.008	-0.171	-0.299	-0.257

Load : Dead Weight + Pressure 2 + Thermal 2 + Displacement 2

*** System Stresses (ANSI B31.3) ***

Point Name	In-Plane SIF	Out Plane SIF	Section Modulus	Stresses/psi Hoop	Longitu.	Principal	Code	Allow.
TR1	1.00	1.00	0.01	517	732	751	839	20000
TR2.Near	1.15	1.00	0.01	517	287	534	394	20000
TR2.Far	1.15	1.00	0.01	517	276	538	383	20000
TR2a	1.00	1.00	0.01	517	1406	1412	1513	20000
TR3	1.00	1.00	0.01	517	833	850	940	20000
TR4.Near	1.00	1.00	0.01	517	475	573	582	20000
TR4.Far	1.00	1.00	0.01	517	452	553	559	20000
TR5	1.00	1.00	0.01	517	372	538	478	20000
TR5a	1.00	1.00	0.01	517	637	656	744	20000
TR6.Near	1.00	1.00	0.01	517	303	529	410	20000
TR6.Far	1.00	1.00	0.01	517	348	518	455	20000
TR6a	1.00	1.00	0.01	517	315	518	422	20000
TR6b	1.00	1.00	0.01	517	1166	1167	1273	20000
TR7.Near	1.00	1.00	0.01	517	299	517	406	20000
TR7.Far	1.00	1.00	0.01	517	233	530	340	20000
TR7a	1.00	1.00	0.01	517	1435	1439	1590	20000
TR7b	1.00	1.00	0.01	517	1469	1473	1594	20000
TR8.Near	1.00	1.00	0.01	517	257	532	367	200[illegible]
TR8.Far	1.00	1.00	0.01	517	314	518	422	20000
TR9	1.00	1.00	0.01	517	243	518	350	20000
HE0a	1.00	1.00	0.02	805	1145	2032	2702	20000
HE0b.Near	1.23	1.02	0.02	805	1498	2251	2858	20000
HE0b.Far	1.23	1.02	0.02	805	2138	2462	2793	20000
HE1	1.00	1.00	0.02	805	1847	2226	2563	20000
HE2.Near	1.23	1.02	0.02	805	1512	1973	2335	20000
HE2.Far	1.23	1.02	0.02	805	2120	2121	2229	20000
HE3	1.00	1.00	0.02	805	3468	3468	3582	20000
HE4.Near	1.00	1.00	0.02	805	1852	1853	2035	20000
HE4.Far	1.00	1.00	0.02	805	1362	1368	1731	20000
HE5	1.00	1.00	0.02	805	1250	1257	1749	20000
HE6.Near	1.23	1.02	0.02	805	5880	5881	5951	20000
HE6.Far	1.23	1.02	0.02	805	5643	5644	5762	20000
HE6a	1.00	1.00	0.02	805	3471	3473	3827	20000
HE6b	1.00	1.00	0.02	805	2000	2005	2178	20000
HE6c	1.00	1.00	0.02	805	2763	2766	2864	20000
HE6d	1.00	1.00	0.02	805	4315	4316	5113	20000
HE7.Near	1.23	1.02	0.02	805	5303	5304	5492	20000
HE7.Far	1.23	1.02	0.02	805	5690	5690	5828	20000
HE7a	1.00	1.00	0.02	805	1540	1540	2031	20000
HE7b	1.00	1.00	0.02	805	780	815	1082	20000
HE7c	1.00	1.00	0.02	805	1147	1148	1336	20000
HE8.Near	1.23	1.02	0.02	805	581	807	830	20000
HE8.Far	1.23	1.02	0.02	805	567	806	808	200[illegible]
HE9	1.00	1.00	0.02	805	343	806	454	20[illegible]
TL1	1.00	1.00	0.01	517	722	751	829	20000
TL2	1.00	1.00	0.01	517	364	541	471	20000
TL2a	1.00	1.00	0.01	517	1493	1498	1600	20000

Load : Dead Weight + Pressure 2 + Thermal 2 + Displacement 2

*** System Stresses (ANSI B31.3) ***

Point Name	In-Plane SIF	Out Plane SIF	Section Modulus	Stresses/psi Hoop	Longitu.	Principal	Code	Allow.
TL3	1.00	1.00	0.01	517	885	897	992	20000
TL4.Near	1.00	1.00	0.01	517	503	576	610	20000
TL4.Far	1.00	1.00	0.01	517	607	668	714	20000
TL5	1.00	1.00	0.01	517	535	620	641	20000
TL5a	1.00	1.00	0.01	517	439	580	546	20000
TL6.Near	1.00	1.00	0.01	517	321	555	428	20000
TL6.Far	1.00	1.00	0.01	517	424	519	530	20000
TL6a	1.00	1.00	0.01	517	405	518	512	20000
TL6b	1.00	1.00	0.01	517	1497	1497	1604	20000
TL6c	1.00	1.00	0.01	517	251	517	358	20000
TL7	1.00	1.00	0.01	517	328	517	435	20000
TL7a1.Nea	1.00	1.00	0.01	517	322	519	429	20000
TL7a1.Far	1.00	1.00	0.01	517	241	532	347	20000
TL7a	1.00	1.00	0.01	517	1532	1536	1687	20000
TL7b	1.00	1.00	0.01	517	1410	1414	1534	20000
TL8.Near	1.00	1.00	0.01	517	255	532	365	20000
TL8.Far	1.00	1.00	0.01	517	318	518	425	20000
9	1.00	1.00	0.01	517	222	518	329	20000

*** System Maxima ***

Maximum X displacement = 0.335 inch at point TL7a1.Nea
Maximum Y displacement = -0.586 inch at point HE8.Far
Maximum Z displacement = 0.315 inch at point HE6.Near

Maximum X rotation = -1.010 degree at point HE6d
Maximum Y rotation = -0.610 degree at point HE5
Maximum Z rotation = 0.447 degree at point TL7

Maximum X force = -8 lb at point HE3
Maximum Y force = 12 lb at point HE4.Near
Maximum Z force = -3 lb at point HE0a

Maximum X moment = 75 inch-lb at point HE7.Far
Maximum Y moment = 97 inch-lb at point HE6.Near
Maximum Z moment = 64 inch-lb at point HE3

Maximum hoop stress = 805 psi at point HE0a
Maximum longitudinal stress = 5880 psi at point HE6.Near
Maximum principal stress = 5881 psi at point HE6.Near
Maximum code stress = 5951 psi at point HE6.Near
Maximum stress ratio (code/allowable) = 0.30 at point HE6.Near

Load : Dead Weight + Pressure 3 + Thermal 3 + Displacement 3

*** System Deflections ***

Point Name	Displacements/inch X	Y	Z	Rotations/degree X	Y	Z
TR1	0.000	0.000	0.000	-0.000	0.000	0.000
TR2.Near	0.000	0.001	0.000	-0.021	0.005	0.016
TR2.Far	0.000	0.001	0.000	-0.019	0.002	0.018
TR2a	0.000	-0.000	0.000	0.035	0.003	-0.075
TR3	-0.005	-0.025	-0.004	0.106	0.016	-0.234
TR4.Near	-0.010	-0.056	-0.008	0.146	0.017	-0.290
TR4.Far	-0.015	-0.102	-0.017	0.305	-0.108	0.235
TR5	-0.011	-0.087	-0.015	0.303	-0.108	0.249
TR5a	0.012	-0.002	-0.006	0.249	-0.094	0.241
TR6.Near	0.027	0.055	-0.000	0.196	-0.066	0.204
TR6.Far	0.027	0.057	0.000	0.191	-0.059	0.205
TR6a	-0.000	-0.000	0.000	-0.011	-0.057	0.229
TR6b	-0.000	-0.000	0.000	0.122	0.163	0.256
TR7.Near	0.214	-0.163	0.002	0.263	0.383	0.277
TR7.Far	0.216	-0.165	0.002	0.262	0.379	0.278
TR7a	0.000	-0.000	-0.000	0.142	0.173	-0.141
TR7b	-0.000	-0.000	-0.000	-0.169	-0.211	0.131
TR8.Near	0.229	-0.174	0.008	-0.281	-0.433	-0.294
TR8.Far	0.227	-0.173	0.009	-0.282	-0.438	-0.292
TR9	0.139	-0.117	0.009	-0.285	-0.447	-0.282
HE0a	-0.000	0.112	0.000	0.000	-0.000	-0.000
HE0b.Near	-0.000	0.112	-0.000	0.053	-0.003	-0.021
HE0b.Far	-0.000	0.111	-0.000	0.129	-0.014	-0.067
HE1	-0.000	0.109	-0.000	0.149	-0.016	-0.091
HE2.Near	-0.002	0.096	-0.000	0.202	-0.022	-0.202
HE2.Far	-0.003	0.088	-0.001	0.226	-0.029	-0.261
HE3	-0.020	0.004	-0.004	0.145	-0.029	-0.054
HE4.Near	-0.020	0.004	-0.004	0.112	-0.024	0.047
HE4.Far	-0.017	0.003	0.007	0.045	-0.036	0.006
HE5	-0.016	0.004	0.008	0.039	-0.033	0.001
HE6.Near	-0.014	0.005	0.011	0.009	0.011	-0.007
HE6.Far	-0.014	0.005	0.010	0.008	0.027	-0.006
HE6a	-0.000	-0.000	0.011	0.033	0.028	-0.003
HE6b	0.003	-0.017	0.011	0.031	-0.007	0.002
HE6c	-0.001	-0.015	0.011	-0.039	-0.010	0.006
HE6d	-0.000	-0.000	0.011	-0.009	0.019	0.010
HE7.Near	0.014	-0.011	0.011	0.035	0.043	0.013
HE7.Far	0.015	-0.011	0.011	0.030	0.044	0.014
HE7a	-0.000	-0.000	0.000	-0.005	0.011	-0.023
HE7b	-0.000	-0.000	-0.000	-0.046	-0.063	0.040
HE7c	-0.000	-0.000	-0.000	-0.093	-0.132	-0.139
HE8.Near	0.193	-0.147	0.015	-0.101	-0.189	-0.318
HE8.Far	0.195	-0.149	0.016	-0.100	-0.193	-0.317
HE9	0.157	-0.130	0.016	-0.100	-0.198	-0.314
TL1	0.000	0.000	0.000	-0.000	0.000	0.000
TL2	0.001	0.002	0.000	-0.025	0.006	0.025
TL2a	0.000	-0.000	0.000	0.044	0.004	-0.101
TL3	-0.005	-0.031	-0.004	0.114	0.019	-0.274

Load : Dead Weight + Pressure 3 + Thermal 3 + Displacement 3

*** System Deflections ***

Point Name	Displacements/inch X	Y	Z	Rotations/degree X	Y	Z
TL4.Near	-0.012	-0.066	-0.009	0.151	0.021	-0.336
TL4.Far	-0.019	-0.126	-0.017	0.285	-0.107	0.308
TL5	-0.015	-0.109	-0.015	0.283	-0.107	0.331
TL5a	0.013	-0.003	-0.006	0.230	-0.085	0.383
TL6.Near	0.025	0.042	-0.004	0.195	-0.066	0.377
TL6.Far	0.026	0.047	-0.004	0.187	-0.058	0.379
TL6a	-0.000	-0.000	-0.004	-0.026	-0.069	0.400
TL6b	0.000	-0.000	-0.004	0.183	0.210	0.427
TL6c	0.295	-0.257	-0.001	0.428	0.546	0.446
TL7	0.335	-0.288	-0.001	0.424	0.537	0.447
TL7a1.Nea	0.335	-0.259	-0.037	0.420	0.526	0.447
TL7a1.Far	0.333	-0.254	-0.040	0.419	0.523	0.447
TL7a	0.000	-0.000	-0.000	0.277	0.314	-0.075
TL7b	-0.000	-0.000	-0.000	-0.061	-0.063	0.143
TL8.Near	0.187	-0.143	0.007	-0.166	-0.281	-0.268
TL8.Far	0.186	-0.142	0.008	-0.166	-0.287	-0.267
TL9	0.128	-0.109	0.008	-0.171	-0.299	-0.257

Load : Dead Weight + Pressure 3 + Thermal 3 + Displacement 3

*** System Stresses (ANSI B31.3) ***

Point Name	In-Plane SIF	Out Plane SIF	Section Modulus	Stresses/psi Hoop	Longitu.	Principal	Code	Allow.
TR1	1.00	1.00	0.01	517	732	751	839	20000
TR2.Near	1.15	1.00	0.01	517	287	534	394	20000
TR2.Far	1.15	1.00	0.01	517	276	538	383	20000
TR2a	1.00	1.00	0.01	517	1406	1412	1513	20000
TR3	1.00	1.00	0.01	517	833	850	940	20000
TR4.Near	1.00	1.00	0.01	517	475	573	582	20000
TR4.Far	1.00	1.00	0.01	517	452	553	559	20000
TR5	1.00	1.00	0.01	517	372	538	478	20000
TR5a	1.00	1.00	0.01	517	637	656	744	20000
TR6.Near	1.00	1.00	0.01	517	303	529	410	20000
TR6.Far	1.00	1.00	0.01	517	348	518	455	20000
TR6a	1.00	1.00	0.01	517	315	518	422	20000
TR6b	1.00	1.00	0.01	517	1166	1167	1273	20000
TR7.Near	1.00	1.00	0.01	517	299	517	406	20000
TR7.Far	1.00	1.00	0.01	517	233	530	340	20000
TR7a	1.00	1.00	0.01	517	1435	1439	1590	20000
TR7b	1.00	1.00	0.01	517	1469	1473	1594	20000
TR8.Near	1.00	1.00	0.01	517	257	532	367	20000
TR8.Far	1.00	1.00	0.01	517	314	518	422	20000
TR9	1.00	1.00	0.01	517	243	518	350	20000
HE0a	1.00	1.00	0.02	805	1118	1936	2566	20000
HE0b.Near	1.23	1.02	0.02	805	1520	2188	2743	20000
HE0b.Far	1.23	1.02	0.02	805	2007	2344	2697	20000
HE1	1.00	1.00	0.02	805	1740	2131	2483	20000
HE2.Near	1.23	1.02	0.02	805	722	1485	1996	20000
HE2.Far	1.23	1.02	0.02	805	1576	1580	1787	20000
HE3	1.00	1.00	0.02	805	3213	3215	3373	20000
HE4.Near	1.00	1.00	0.02	805	920	944	1058	20000
HE4.Far	1.00	1.00	0.02	805	494	810	714	20000
HE5	1.00	1.00	0.02	805	555	811	798	20000
HE6.Near	1.23	1.02	0.02	805	540	811	654	20000
HE6.Far	1.23	1.02	0.02	805	529	805	654	20000
HE6a	1.00	1.00	0.02	805	647	805	872	20000
HE6b	1.00	1.00	0.02	805	535	805	707	20000
HE6c	1.00	1.00	0.02	805	482	805	625	20000
HE6d	1.00	1.00	0.02	805	776	806	916	20000
HE7.Near	1.23	1.02	0.02	805	403	805	520	20000
HE7.Far	1.23	1.02	0.02	805	395	807	506	20000
HE7a	1.00	1.00	0.02	805	734	813	878	20000
HE7b	1.00	1.00	0.02	805	619	809	772	20000
HE7c	1.00	1.00	0.02	805	1110	1112	1237	20000
HE8.Near	1.23	1.02	0.02	805	394	807	507	20000
HE8.Far	1.23	1.02	0.02	805	401	806	511	20000
HE9	1.00	1.00	0.02	805	334	805	443	20000
TL1	1.00	1.00	0.01	517	722	751	829	20000
TL2	1.00	1.00	0.01	517	364	541	471	20000
TL2a	1.00	1.00	0.01	517	1493	1498	1600	20000

Load : Dead Weight + Pressure 3 + Thermal 3 + Displacement 3

*** System Stresses (ANSI B31.3) ***

Point Name	In-Plane SIF	Out Plane SIF	Section Modulus	Stresses/psi Hoop	Longitu.	Principal	Code	Allow.
TL3	1.00	1.00	0.01	517	885	897	992	20000
TL4.Near	1.00	1.00	0.01	517	503	576	610	20000
TL4.Far	1.00	1.00	0.01	517	607	668	714	20000
TL5	1.00	1.00	0.01	517	535	620	641	20000
TL5a	1.00	1.00	0.01	517	439	580	546	20000
TL6.Near	1.00	1.00	0.01	517	321	555	428	20000
TL6.Far	1.00	1.00	0.01	517	424	519	530	20000
TL6a	1.00	1.00	0.01	517	405	518	512	20000
TL6b	1.00	1.00	0.01	517	1497	1497	1604	20000
TL6c	1.00	1.00	0.01	517	251	517	358	20000
TL7	1.00	1.00	0.01	517	328	517	435	20000
TL7a1.Nea	1.00	1.00	0.01	517	322	519	429	20000
TL7a1.Far	1.00	1.00	0.01	517	241	532	347	20000
TL7a	1.00	1.00	0.01	517	1532	1536	1687	20000
TL7b	1.00	1.00	0.01	517	1410	1414	1534	20000
TL8.Near	1.00	1.00	0.01	517	255	532	365	20000
TL8.Far	1.00	1.00	0.01	517	318	518	425	20000
TL9	1.00	1.00	0.01	517	222	518	329	200

*** System Maxima ***

Maximum X displacement = 0.335 inch at point TL7a1.Nea
Maximum Y displacement = -0.288 inch at point TL7
Maximum Z displacement = -0.040 inch at point TL7a1.Far

Maximum X rotation = 0.428 degree at point TL6c
Maximum Y rotation = 0.546 degree at point TL6c
Maximum Z rotation = 0.447 degree at point TL7

Maximum X force = -3 lb at point HE3
Maximum Y force = 12 lb at point HE4.Near
Maximum Z force = -1 lb at point HE3

Maximum X moment = -42 inch-lb at point HE0a
Maximum Y moment = 7 inch-lb at point TL6b
Maximum Z moment = 62 inch-lb at point HE3

Maximum hoop stress = 805 psi at point HE0a
Maximum longitudinal stress = 3213 psi at point HE3
Maximum principal stress = 3215 psi at point HE3
Maximum code stress = 3373 psi at point HE3
Maximum stress ratio (code/allowable) = 0.17 at point HE3

File Name ..... CASE4&5
Project ..... D-Zero Solenoid Upgrade CHIMNEY DESIGN
Department ..... Research Division/D-Zero Mechanical
Contract Number ..... Serial # 3823.111
Description ..... Liquid Nitrogen & Liquid Helium lines
Prepared by ..... Russ Rucinski
Checked by .....

ANSI code ..... ANSI B31.3
Input unit ..... English
Output unit ..... English
Output columns 80
Base temperature 70
F factor 1.0
E factor 1.33

Number of dynamic modes.. 0
Cut-off frequency ..... 0 Hz
Max no. of iterations ... 0
Convergence tolerance ... 0
Force tolerance ..... 0 lb

Frm /To	Point name	DX (feet)	DY (feet)	DZ (feet)	Radius (inch)	X (feet)	Y (feet)	Z (feet)
C	Points HE0 thru HEn represent the LHe supply line.							
C	Pt HE0 moves when the solenoid is cold. HE0a is attached							
c	to the support cylinder.							
C								
C	Points TR1 thru TRnn represent nodal points for the top right LN2 line.							
C	The supports are spider type supports, LN2 shield to VJ.							
C	At the solenoid, TR1 doesn't move when sol. is cold since sol. shield							
C	floats on panels supported off vacuum jacket.							
F	TR1	0	0	0		0.000	0.000	0.0
T	TR2	0	0	4.6373"	Short	0.000	0.000	0.3
C	The first support is placed midway between TR2 and TR3.							
T	TR2a	8.2170"	-1.7687"	1.6338"		0.685	-0.147	0.5
T	TR3	8.2170"	-1.7687"	1.6338"		1.370	-0.295	0.6
T	TR4	35.1470"	-7.5657"	6.9884"	89.1875	4.298	-0.925	1.2
T	TR5	28.5434"	-6.1442"	-14.557"		6.677	-1.437	0.0
C	The second support is placed approx. midway between TR5 and TR6.							
T	TR5a	12.1639"	-2.6184"	-6.0645"		7.691	-1.655	-0.4
C	Point TR6 is moved 0.375" in +X to bring it to nominal location when col							
T	TR6	11.0389"	-2.2955"	-6.0096"	Long	8.611	-1.847	-0.9
C	Pt TR6a offset in X is compensates for TR6 dev. from nom. when warm.							
T	TR6a	-0.375"	0	38.1782"		8.579	-1.847	2.2
T	TR6b	0	0	38.1782"		8.579	-1.847	
C	Pt. TR7 is -.35" in X and +0.29" in Z to bring to nom. location when col							
T	TR7	-0.35"	0	38.4682"	Long	8.550	-1.847	8.5
C	Pt TR7a offset in X & Z compensates for TR7 deviation from nom. when wa							
T	TR7a	41.5738"	54.4685"	-0.29"		12.015	2.692	8.5
T	TR7b	82.6876"	108.937"	0		18.905	11.770	8.5
T	TR8	41.3438"	54.4685"	0	Long	22.351	16.309	8.5
T	TR9	0	0	12"		22.351	16.309	9.5
F	HE0a	-3.53"	1.913"	0		-0.294	0.159	0.0
T	HE0b	-2.60"	0	0	Long	-0.511	0.159	0.0
T	HE1	0	0	2.03"		-0.511	0.159	0.1
T	HE2	0	0	5.05166"	Long	-0.511	0.159	0.5
T	HE3	17.7721"	-3.8256"	3.53368"		0.970	-0.159	0.8
T	HE4	35.3646"	-7.6125"	7.03164"	89.875"	3.917	-0.794	1.4
T	HE5	28.7412"	-6.1869"	-14.658"		6.312	-1.309	0.2
C	Pt HE6 is +0.375" longer in X to bring to nom. location when cold.							
T	HE6	20.8721"	-5.128"	-10.535"	Long	8.052	-1.737	-0.0
C	Pt HE6a X offset is to compensate for HE6 deviation from nom. when warm							
T	HE6a	-.375"	0	24.0000"		8.020	-1.737	1.0
T	HE6b	0	0	21.8808"		8.020	-1.737	3.1
T	HE6c	0	0	21.8808"		8.020	-1.737	5.0
T	HE6d	0	0	21.8808"		8.020	-1.737	6.8
C	Pt HE7 is -.35" in X and +0.29" in Z to bring to nom. location when col							
T	HE7	-0.35"	0	24.2900"	Long	7.991	-1.737	8.3
C	Pt HE7a offset in X is +.35" more than nom. and Z offset to compensate							
C	HE7 warm deviation from nominal location.							
T	HE7a	31.3353"	40.8512"	-0.29"		10.603	1.668	8.
T	HE7b	51.6422"	68.0854"	0		14.906	7.341	8.
T	HE7c	51.6422"	68.0854"	0		19.210	13.015	8.
T	HE8	30.9854"	40.8512"	0	Long	21.792	16.419	8.

Frm /To	Point name	DX (feet)	DY (feet)	DZ (feet)	Radius (inch)	X (feet)	Y (feet)	Z (feet)
T	HE9	0	0	12"		21.792	16.419	9.8
C								
C	The points below, TLn represent the top left LN2 piping.							
F	TL1	-3.00"	0	0		-0.250	0.000	0.0
T	TL2	0	0	5.50"		-0.250	0.000	0.4
T	TL2a	10.8932"	-2.3449"	2.16594"		0.658	-0.195	0.6
T	TL3	8.2170"	-1.7687"	1.6338"		1.343	-0.343	0.7
T	TL4	35.5822"	-7.6593"	7.07489"	90.5625"	4.308	-0.981	1.3
T	TL5	28.9401"	-6.2296"	-14.760"		6.719	-1.500	0.1
T	TL5a	12.1639"	-2.6184"	-6.0645"		7.733	-1.718	-0.3
C	Pt. TL6 is moved +.375" in X to bring it to nominal when cold.							
T	TL6	6.3751"	-1.5456"	-3.2267"	Long	8.264	-1.847	-0.6
C	Pt. TL6a X offset is to compensate for TL6 dev. from nom. when warm.							
T	TL6a	-.375"	0	34.118"		8.233	-1.847	2.2
T	TL6b	0	0	38.1782"		8.233	-1.847	5.3
C	Pt. TL6c is -.35" in X and +.29" in Z to bring to nom. location when col							
T	TL6c	-0.35"	0	38.4682"		8.204	-1.847	8.5
C	A jog using pt. TL7 and TL7a1 was required to maintain the correct spaci							
C	of the LN2 lines.							
T	TL7	0	0	4.16"		8.204	-1.847	8.9
T	TL7a1	4.16"	0	0	Long	8.551	-1.847	8.9
T	TL7a	41.5738"	54.4685"	0		12.015	2.692	8.9
T	TL7b	82.6876"	108.937"	0		18.906	11.770	8.9
C	Pt TL8 was stopped short by 5% to approximate actual piping relationship							
T	TL8	39.2766"	51.7451"	0	Long	22.179	16.082	8.9
T	TL9	0	0	12"		22.179	16.082	9.9

Point	Data	Description
TR1	Pipe	Pipe data identifier = 1/2 Nominal Diameter = 1/2 Pipe Schedule = Actual Pipe O. D. = .500 inch Wall Thickness = 0.065 inch Corrosion Allowance = 0 inch Insulation Thickness = 0 inch Insulation Density = 0 lb/cu.ft Content S. G. = 1.0
	Material	Data Identifier = AL Aluminum, aluminum alloys Density = 0.0978 lb/cu.inch

Tempera. (deg.F)	Modulus (psi)	Expansion (inch/inch)
-325.	11300000	-0.00390
-150.	11100000	-0.00240
-50.	10900000	-0.00139
70.	10600000	0.00000
200.	10400000	0.00167
300.	10200000	0.00306
400.	9500000	0.00449
500.	8500000	0.00598

Temperature (deg.F)	Allowable stresses (psi)
-320	8000.

Load — Load data identifier = LN2

Case No.	Temperature (deg.F)	Pressure (psig)	Expansion (inch/inch)
1	-320	150	-0.003857
2	-320	150	-0.003857

Anchor — Rigid in all directions
Initial displacement (inch,degree) :
Case 1, translational X = 0 inch
Case 1, translational Y = 0 inch
Case 1, translational Z = 0 inch
Case 1, rotational X = 0 degree
Case 1, rotational Y = 0 degree
Case 1, rotational Z = 0 degree
Case 2, translational X = 0 inch
Case 2, translational Y = 0 inch
Case 2, translational Z = 0 inch
Case 2, rotational X = 0 degree
Case 2, rotational Y = 0 degree
Case 2, rotational Z = 0 degree

TR2
TR2a Guide
TR3
TR4
TR5
TR5a Guide
TR6
TR6a Guide

```
Point  Data     Description
-----  -------- ---------------------------------------------------
TR6b   Guide
TR7
TR7a   Line stop
       Guide
TR7b   Guide
TR8
TR9    Anchor   Translational stiffness (lb/inch) :
                X=FREE     Y=FREE     Z=FREE
                Rotational stiffness (lb-inch/deg) :
                X=FREE     Y=FREE     Z=FREE
                Initial displacement (inch,degree) :
                Case 1, translational X = 0        inch
                Case 1, translational Y = 0        inch
                Case 1, translational Z = 0        inch
                Case 1, rotational X = 0        degree
                Case 1, rotational Y = 0        degree
                Case 1, rotational Z = 0        degree
                Case 2, translational X = 0        inch
                Case 2, translational Y = 0        inch
                Case 2, translational Z = 0        inch
                Case 2, rotational X = 0        degree
                Case 2, rotational Y = 0        degree
                Case 2, rotational Z = 0        degree
                Free Y restraint during hanger design
HE0a   Pipe     Pipe data identifier = 3/4
                Nominal Diameter = 3/4
                Pipe Schedule =
                Actual Pipe O. D. = 0.750    inch
                Wall Thickness = 0.065    inch
                Corrosion Allowance = 0        inch
                Insulation Thickness = 0        inch
                Insulation Density = 0        lb/cu.ft
                Content S. G. = 1.0
       Material Data Identifier = AL
       Load     Load data identifier = LHE
                Case  Temperature  Pressure   Expansion
                 No.   (deg.F)     (psig    ) (inch/inch)
                  1      -452        150       -0.003900
                  2      -452        150       -0.003900
       Anchor   Rigid in all directions
                Initial displacement (inch,degree) :
                Case 1, translational X = 0.0000   inch
                Case 1, translational Y = 0.1120   inch
                Case 1, translational Z = 0.000    inch
                Case 1, rotational X = 0        degree
                Case 1, rotational Y = 0        degree
                Case 1, rotational Z = 0        degree
                Case 2, translational X = 0.0      inch
                Case 2, translational Y = 0.0      inch
                Case 2, translational Z = 0.0      inch
                Case 2, rotational X = 0        degree
                Case 2, rotational Y = 0        degree
```

Point	Data	Description
		Case 2, rotational Z = 0 degree
HE0b		
HE1		
HE2		
HE3	Anchor	Translational stiffness (lb/inch) :
		X=Rigid Y=Rigid Z=Rigid
		Rotational stiffness (lb-inch/deg) :
		X=FREE Y=FREE Z=FREE
		Initial displacement (inch,degree) :
		Case 1, translational X = -0.077 inch
		Case 1, translational Y = -0.017 inch
		Case 1, translational Z = -0.004 inch
		Case 1, rotational X = 0 degree
		Case 1, rotational Y = 0 degree
		Case 1, rotational Z = 0 degree
		Case 2, translational X = -0.077 inch
		Case 2, translational Y = -0.017 inch
		Case 2, translational Z = -0.004 inch
		Case 2, rotational X = 0 degree
		Case 2, rotational Y = 0 degree
		Case 2, rotational Z = 0 degree
HE4	Anchor	Translational stiffness (lb/inch) :
		X=Rigid Y=Rigid Z=Rigid
		Rotational stiffness (lb-inch/deg) :
		X=FREE Y=FREE Z=FREE
		Initial displacement (inch,degree) :
		Case 1, translational X = -0.109 inch
		Case 1, translational Y = -0.052 inch
		Case 1, translational Z = -0.008 inch
		Case 1, rotational X = 0 degree
		Case 1, rotational Y = 0 degree
		Case 1, rotational Z = 0 degree
		Case 2, translational X = -0.109 inch
		Case 2, translational Y = -0.052 inch
		Case 2, translational Z = -0.008 inch
		Case 2, rotational X = 0 degree
		Case 2, rotational Y = 0 degree
		Case 2, rotational Z = 0 degree
HE5	Anchor	Translational stiffness (lb/inch) :
		X=Rigid Y=Rigid Z=Rigid
		Rotational stiffness (lb-inch/deg) :
		X=FREE Y=FREE Z=FREE
		Initial displacement (inch,degree) :
		Case 1, translational X = -0.311 inch
		Case 1, translational Y = -0.052 inch
		Case 1, translational Z = 0.137 inch
		Case 1, rotational X = 0 degree
		Case 1, rotational Y = 0 degree
		Case 1, rotational Z = 0 degree
		Case 2, translational X = -0.311 inch
		Case 2, translational Y = -0.052 inch
		Case 2, translational Z = 0.137 inch

Point	Data	Description
		Case 2, rotational X = 0 degree
		Case 2, rotational Y = 0 degree
		Case 2, rotational Z = 0 degree
HE6		Translational stiffness (lb/inch) :
HE6a	Anchor	X=Rigid Y=Rigid Z=Rigid
		Rotational stiffness (lb-inch/deg) :
		X=FREE Y=FREE Z=FREE
		Initial displacement (inch,degree) :
		Case 1, translational X = -0.096 inch
		Case 1, translational Y = 0.035 inch
		Case 1, translational Z = 0.073 inch
		Case 1, rotational X = 0 degree
		Case 1, rotational Y = 0 degree
		Case 1, rotational Z = 0 degree
		Case 2, translational X = -0.096 inch
		Case 2, translational Y = 0.035 inch
		Case 2, translational Z = 0.073 inch
		Case 2, rotational X = 0 degree
		Case 2, rotational Y = 0 degree
		Case 2, rotational Z = 0 degree
HE6b		
HE6c		
HE6d	Anchor	Translational stiffness (lb/inch) :
		X=Rigid Y=Rigid Z=Rigid
		Rotational stiffness (lb-inch/deg) :
		X=FREE Y=FREE Z=FREE
		Initial displacement (inch,degree) :
		Case 1, translational X = 0.110 inch
		Case 1, translational Y = 0.031 inch
		Case 1, translational Z = -0.181 inch
		Case 1, rotational X = 0 degree
		Case 1, rotational Y = 0 degree
		Case 1, rotational Z = 0 degree
		Case 2, translational X = 0.110 inch
		Case 2, translational Y = 0.031 inch
		Case 2, translational Z = -0.181 inch
		Case 2, rotational X = 0 degree
		Case 2, rotational Y = 0 degree
		Case 2, rotational Z = 0 degree
HE7		
HE7a	Anchor	Translational stiffness (lb/inch) :
		X=Rigid Y=Rigid Z=Rigid
		Rotational stiffness (lb-inch/deg) :
		X=FREE Y=FREE Z=FREE
		Initial displacement (inch,degree) :
		Case 1, translational X = 0.052 inch
		Case 1, translational Y = 0.060 inch
		Case 1, translational Z = -0.124 inch
		Case 1, rotational X = 0 degree
		Case 1, rotational Y = 0 degree
		Case 1, rotational Z = 0 degree

Point	Data	Description
TL9	Anchor	Translational stiffness (lb/inch) :
		X=Free Y=Free Z=Free
		Rotational stiffness (lb-inch/deg) :
		X=Free Y=Free Z=Free
		Initial displacement (inch,degree) :
		Case 1, translational X = 0 inch
		Case 1, translational Y = 0 inch
		Case 1, translational Z = 0 inch
		Case 1, rotational X = 0 degree
		Case 1, rotational Y = 0 degree
		Case 1, rotational Z = 0 degree
		Case 2, translational X = 0 inch
		Case 2, translational Y = 0 inch
		Case 2, translational Z = 0 inch
		Case 2, rotational X = 0 degree
		Case 2, rotational Y = 0 degree
		Case 2, rotational Z = 0 degree
		Case 3, translational X = 0 inch
		Case 3, translational Y = 0 inch
		Case 3, translational Z = 0 inch
		Case 3, rotational X = 0 degree
		Case 3, rotational Y = 0 degree
		Case 3, rotational Z = 0 degree
		Free Y restraint during hanger design

Case number	Combination
1	D.W. + Pres1 + Ther1 + Disp1
2	D.W. + Pres2 + Ther2 + Disp2

*** Support Summary ***

Point Name	Global Direction	Forces/lb or Moments/inch-lb Sustained Max	Sustained Min	Expansion Max	Expansion Min	Occasion.	Total Max	Mi
TL7b	Fx	1	0	0	0	0	1	
	Fy	-1	0	0	-0	0	-1	
	Fz	-0	0	0	0	0	0	
TL9	Fx	0	0	0	-0	0	0	
	Fy	-0	0	0	-1	0	-0	
	Fz	0	0	0	-0	0	0	
	Mx	-0	0	0	-0	0	-0	
	Mz	-0	0	0	-0	0	-0	

*** System Deflections ***

Point Name	Displacements/inch X	Y	Z	Rotations/degree X	Y	Z
TR1	0.000	0.000	0.000	-0.000	-0.000	0.00
TR2.Near	-0.002	0.002	-0.016	-0.035	-0.051	0.01
TR2.Far	-0.004	0.002	-0.018	-0.038	-0.079	0.01
TR2a	-0.037	0.008	-0.007	0.007	-0.114	-0.07
TR3	-0.076	-0.010	-0.003	0.085	-0.062	-0.23
TR4.Near	-0.107	-0.037	-0.005	0.126	-0.049	-0.29
TR4.Far	-0.306	-0.045	0.138	0.267	-0.208	0.24
TR5	-0.308	-0.029	0.147	0.269	-0.189	0.26
TR5a	-0.332	0.069	0.180	0.254	0.007	0.27
TR6.Near	-0.375	0.143	0.167	0.256	0.318	0.23
TR6.Far	-0.374	0.146	0.156	0.267	0.404	0.23
TR6a	-0.000	-0.000	0.018	0.140	0.302	0.21
TR6b	0.001	-0.000	-0.129	-0.147	0.151	0.20
TR7.Near	0.293	0.103	-0.272	-0.028	0.430	0.18
TR7.Far	0.295	0.102	-0.278	0.008	0.397	0.18
TR7a	0.000	-0.000	-0.000	0.310	-0.107	-0.19
TR7b	-0.319	-0.420	0.000	-0.198	-0.286	0.13
TR8.Near	-0.241	-0.807	-0.080	-0.666	-0.210	-0.30
TR8.Far	-0.242	-0.803	-0.088	-0.695	-0.194	-0.30
TR9	-0.274	-0.656	-0.132	-0.770	-0.146	-0.29
HE0a	0.000	0.112	0.000	0.000	0.000	-0.00
HE0b.Near	0.006	0.112	0.001	0.049	0.048	-0.02
HE0b.Far	0.013	0.111	-0.002	0.115	0.147	-0.07
HE1	0.015	0.109	-0.005	0.132	0.156	-0.10
HE2.Near	0.025	0.098	-0.021	0.170	0.106	-0.22
HE2.Far	0.022	0.091	-0.027	0.175	-0.033	-0.29
HE3	-0.077	-0.017	-0.004	0.187	-0.105	-0.36
HE4.Near	-0.109	-0.052	-0.008	0.202	-0.020	-0.32
HE4.Far	-0.309	-0.064	0.126	0.101	-0.216	0.23
HE5	-0.311	-0.052	0.137	0.097	-0.200	0.25
HE6.Near	-0.358	0.088	0.170	0.095	0.290	0.35
HE6.Far	-0.354	0.097	0.155	0.123	0.505	0.34
HE6a	-0.096	0.035	0.073	0.201	0.601	0.30
HE6b	0.046	-0.044	-0.012	0.163	0.188	0.25
HE6c	0.081	-0.062	-0.096	-0.090	0.040	0.21
HE6d	0.110	0.031	-0.181	-0.393	0.155	0.17
HE7.Near	0.187	0.201	-0.270	-0.327	0.120	0.14
HE7.Far	0.184	0.205	-0.280	-0.230	0.049	0.13
HE7a	0.052	0.060	-0.124	0.201	-0.230	-0.24
HE7b	0.264	-0.515	0.067	0.012	-0.011	0.00
HE7c	-0.356	-0.459	0.026	-0.014	0.084	0.26
HE8.Near	-0.481	-0.609	-0.070	-0.095	0.192	-0.09
HE8.Far	-0.479	-0.612	-0.079	-0.110	0.207	-0.09
HE9	-0.437	-0.589	-0.121	-0.129	0.222	-0.09
TL1	0.000	0.000	0.000	-0.000	-0.000	0.00
TL2	-0.002	0.002	-0.021	-0.037	-0.050	0.02
TL2a	-0.048	0.010	-0.010	0.021	-0.102	-0.10
TL3	-0.088	-0.013	-0.007	0.099	-0.053	-0.27

Load : Dead Weight + Pressure 1 + Thermal 1 + Displacement 1

*** System Deflections ***

Point Name	Displacements/inch X	Y	Z	Rotations/degree X	Y	Z
TL4.Near	-0.119	-0.044	-0.010	0.137	-0.045	-0.33
TL4.Far	-0.319	-0.058	0.157	0.269	-0.182	0.32
TL5	-0.321	-0.039	0.165	0.274	-0.148	0.35
TL5a	-0.349	0.085	0.177	0.286	0.170	0.41
TL6.Near	-0.373	0.141	0.156	0.291	0.382	0.41
TL6.Far	-0.370	0.146	0.144	0.302	0.476	0.41
TL6a	-0.000	-0.000	0.021	0.141	0.352	0.41
TL6b	0.001	-0.000	-0.126	-0.070	0.165	0.40
TL6c	0.368	0.010	-0.271	0.084	0.619	0.40
TL7	0.411	0.002	-0.287	0.140	0.559	0.40
TL7a1.Nea	0.396	0.029	-0.322	0.217	0.498	0.39
TL7a1.Far	0.392	0.032	-0.326	0.233	0.481	0.39
TL7a	0.000	-0.000	-0.000	0.424	0.047	-0.16
TL7b	-0.319	-0.420	0.000	-0.091	-0.132	0.15
TL8.Near	-0.278	-0.762	-0.084	-0.537	-0.061	-0.28
TL8.Far	-0.277	-0.760	-0.092	-0.564	-0.045	-0.27
TL9	-0.280	-0.638	-0.135	-0.640	-0.000	-0.26

*** System Stresses (ANSI B31.3) ***

Point Name	In-Plane SIF	Out Plane SIF	Section Modulus	Stresses/psi Hoop	Longitu.	Principal	Code	Allo
TR1	1.00	1.00	0.01	517	918	929	1376	200
TR2.Near	1.15	1.00	0.01	517	1116	1123	1233	200
TR2.Far	1.15	1.00	0.01	517	1075	1083	1186	200
TR2a	1.00	1.00	0.01	517	1509	1514	1800	200
TR3	1.00	1.00	0.01	517	887	900	1078	200
TR4.Near	1.00	1.00	0.01	517	494	577	611	200
TR4.Far	1.00	1.00	0.01	517	641	672	924	200
TR5	1.00	1.00	0.01	517	659	687	910	200
TR5a	1.00	1.00	0.01	517	1124	1130	1560	200
TR6.Near	1.00	1.00	0.01	517	1793	1796	1906	200
TR6.Far	1.00	1.00	0.01	517	1752	1752	1919	200
TR6a	1.00	1.00	0.01	517	2005	2005	2122	200
TR6b	1.00	1.00	0.01	517	1648	1648	2507	200
TR7.Near	1.00	1.00	0.01	517	1320	1320	1510	200
TR7.Far	1.00	1.00	0.01	517	1364	1368	1473	200
TR7a	1.00	1.00	0.01	517	1448	1452	2022	200
TR7b	1.00	1.00	0.01	517	1525	1528	1831	200
TR8.Near	1.00	1.00	0.01	517	994	1001	1237	200
TR8.Far	1.00	1.00	0.01	517	957	958	1244	200
TR9	1.00	1.00	0.01	517	274	518	417	200
HE0a	1.00	1.00	0.02	805	2895	3222	3661	200
HE0b.Near	1.23	1.02	0.02	805	2991	3307	3720	200
HE0b.Far	1.23	1.02	0.02	805	2244	2600	2926	200
HE1	1.00	1.00	0.02	805	1644	2127	2496	200
HE2.Near	1.23	1.02	0.02	805	2867	3141	3396	200
HE2.Far	1.23	1.02	0.02	805	3701	3701	3712	200
HE3	1.00	1.00	0.02	805	2447	2447	2474	200
HE4.Near	1.00	1.00	0.02	805	1324	1325	1321	200
HE4.Far	1.00	1.00	0.02	805	904	1037	1428	200
HE5	1.00	1.00	0.02	805	951	1072	1575	200
HE6.Near	1.23	1.02	0.02	805	3417	3430	3520	200
HE6.Far	1.23	1.02	0.02	805	3206	3208	3335	200
HE6a	1.00	1.00	0.02	805	2123	2125	2447	200
HE6b	1.00	1.00	0.02	805	1694	1696	1600	200
HE6c	1.00	1.00	0.02	805	1620	1623	1437	200
HE6d	1.00	1.00	0.02	805	1512	1514	2371	200
HE7.Near	1.23	1.02	0.02	805	2406	2407	2582	200
HE7.Far	1.23	1.02	0.02	805	2550	2550	2701	200
HE7a	1.00	1.00	0.02	805	2071	2071	1816	200
HE7b	1.00	1.00	0.02	805	1619	1619	1956	200
HE7c	1.00	1.00	0.02	805	2002	2002	1723	200
HE8.Near	1.23	1.02	0.02	805	717	810	975	200
HE8.Far	1.23	1.02	0.02	805	691	805	943	200
HE9	1.00	1.00	0.02	805	336	805	462	200
TL1	1.00	1.00	0.01	517	747	773	1098	200
TL2	1.00	1.00	0.01	517	1011	1020	1165	200
TL2a	1.00	1.00	0.01	517	1584	1588	1879	200

Load : Dead Weight + Pressure 1 + Thermal 1 + Displacement 1

*** System Stresses (ANSI B31.3) ***

Point Name	In-Plane SIF	Out Plane SIF	Section Modulus	Stresses/psi Hoop	Longitu.	Principal	Code	Allo
TL3	1.00	1.00	0.01	517	922	932	1095	200
TL4.Near	1.00	1.00	0.01	517	511	580	636	200
TL4.Far	1.00	1.00	0.01	517	959	981	1347	200
TL5	1.00	1.00	0.01	517	1017	1035	1372	200
TL5a	1.00	1.00	0.01	517	1569	1578	1845	200
TL6.Near	1.00	1.00	0.01	517	1988	1997	2117	200
TL6.Far	1.00	1.00	0.01	517	1934	1934	2167	200
TL6a	1.00	1.00	0.01	517	2303	2303	2441	200
TL6b	1.00	1.00	0.01	517	1833	1833	2743	200
TL6c	1.00	1.00	0.01	517	960	960	1144	200
TL7	1.00	1.00	0.01	517	1247	1247	1428	200
TL7a1.Nea	1.00	1.00	0.01	517	915	1126	1388	200
TL7a1.Far	1.00	1.00	0.01	517	1194	1199	1297	200
TL7a	1.00	1.00	0.01	517	1495	1498	2092	200
TL7b	1.00	1.00	0.01	517	1477	1481	1751	200
TL8.Near	1.00	1.00	0.01	517	981	988	1222	200
TL8.Far	1.00	1.00	0.01	517	946	947	1236	200
TL9	1.00	1.00	0.01	517	258	518	393	[illegible]

*** System Maxima ***

Maximum X displacement = -0.481 inch at point HE8.Near
Maximum Y displacement = -0.807 inch at point TR8.Near
Maximum Z displacement = -0.326 inch at point TL7a1.Far

Maximum X rotation = -0.770 degree at point TR9
Maximum Y rotation = 0.619 degree at point TL6c
Maximum Z rotation = 0.414 degree at point TL5a

Maximum X force = -113 lb at point HE3
Maximum Y force = 46 lb at point HE7b
Maximum Z force = -45 lb at point HE6a

Maximum X moment = -39 inch-lb at point HE0a
Maximum Y moment = 56 inch-lb at point HE6.Near
Maximum Z moment = -35 inch-lb at point HE0b.Far

Maximum hoop stress = 805 psi at point HE0a
Maximum longitudinal stress = 3701 psi at point HE2.Far
Maximum principal stress = 3701 psi at point HE2.Far
Maximum code stress = 3720 psi at point HE0b.Near
Maximum stress ratio (code/allowable) = 0.19 at point HE0b.Near

*** System Deflections ***

Point Name	Displacements/inch X	Y	Z	Rotations/degree X	Y	Z
TR1	0.000	0.000	0.000	-0.000	-0.000	0.00
TR2.Near	-0.002	0.002	-0.016	-0.035	-0.051	0.01
TR2.Far	-0.004	0.002	-0.018	-0.038	-0.079	0.01
TR2a	-0.037	0.008	-0.007	0.007	-0.114	-0.07
TR3	-0.076	-0.010	-0.003	0.085	-0.062	-0.23
TR4.Near	-0.107	-0.037	-0.005	0.126	-0.049	-0.29
TR4.Far	-0.306	-0.045	0.138	0.267	-0.208	0.24
TR5	-0.308	-0.029	0.147	0.269	-0.189	0.26
TR5a	-0.332	0.069	0.180	0.254	0.007	0.27
TR6.Near	-0.375	0.143	0.167	0.256	0.318	0.23
TR6.Far	-0.374	0.146	0.156	0.267	0.404	0.23
TR6a	-0.000	-0.000	0.018	0.140	0.302	0.21
TR6b	0.001	-0.000	-0.129	-0.147	0.151	0.20
TR7.Near	0.293	0.103	-0.272	-0.028	0.430	0.18
TR7.Far	0.295	0.102	-0.278	0.008	0.397	0.18
TR7a	0.000	-0.000	-0.000	0.310	-0.107	-0.19
TR7b	-0.319	-0.420	0.000	-0.198	-0.286	0.13
TR8.Near	-0.241	-0.807	-0.080	-0.666	-0.210	-0.[illegible]
TR8.Far	-0.242	-0.803	-0.088	-0.695	-0.194	-0.[illegible]
TR9	-0.274	-0.656	-0.132	-0.770	-0.146	-0.29
HE0a	0.000	0.000	0.000	-0.000	0.000	-0.00
HE0b.Near	0.006	0.000	0.000	-0.013	0.004	-0.00
HE0b.Far	0.010	0.001	-0.004	-0.037	-0.001	-0.01
HE1	0.010	0.001	-0.008	-0.042	-0.005	-0.01
HE2.Near	0.009	0.005	-0.024	-0.055	-0.040	-0.02
HE2.Far	0.004	0.006	-0.027	-0.057	-0.092	-0.03
HE3	-0.077	-0.017	-0.004	0.060	-0.061	-0.30
HE4.Near	-0.109	-0.052	-0.008	0.106	-0.006	-0.37
HE4.Far	-0.309	-0.065	0.126	0.079	-0.212	0.25
HE5	-0.311	-0.052	0.137	0.075	-0.196	0.27
HE6.Near	-0.358	0.089	0.170	0.090	0.292	0.35
HE6.Far	-0.354	0.098	0.155	0.121	0.506	0.35
HE6a	-0.096	0.035	0.073	0.204	0.600	0.30
HE6b	0.046	-0.045	-0.012	0.164	0.188	0.26
HE6c	0.081	-0.063	-0.096	-0.091	0.040	0.21
HE6d	0.110	0.031	-0.181	-0.393	0.155	0.17
HE7.Near	0.187	0.201	-0.270	-0.327	0.120	0.14
HE7.Far	0.184	0.205	-0.280	-0.230	0.049	0.13
HE7a	0.052	0.060	-0.124	0.201	-0.230	-0.24
HE7b	0.264	-0.515	0.067	0.012	-0.011	0.00
HE7c	-0.356	-0.459	0.026	-0.014	0.084	0.26
HE8.Near	-0.481	-0.609	-0.070	-0.095	0.192	-0.09
HE8.Far	-0.479	-0.612	-0.079	-0.110	0.206	-0.09
HE9	-0.437	-0.589	-0.121	-0.129	0.222	-0.[illegible]
TL1	0.000	0.000	0.000	-0.000	-0.000	0.00
TL2	-0.002	0.002	-0.021	-0.037	-0.050	0.02
TL2a	-0.048	0.010	-0.010	0.021	-0.102	-0.10
TL3	-0.088	-0.013	-0.007	0.099	-0.053	-0.27

*** System Deflections ***

Point Name	Displacements/inch X	Y	Z	Rotations/degree X	Y	Z
TL4.Near	-0.119	-0.044	-0.010	0.137	-0.045	-0.33
TL4.Far	-0.319	-0.058	0.157	0.269	-0.182	0.32
TL5	-0.321	-0.039	0.165	0.274	-0.148	0.35
TL5a	-0.349	0.085	0.177	0.286	0.170	0.41
TL6.Near	-0.373	0.141	0.156	0.291	0.382	0.41
TL6.Far	-0.370	0.146	0.144	0.302	0.476	0.41
TL6a	-0.000	-0.000	0.021	0.141	0.352	0.41
TL6b	0.001	-0.000	-0.126	-0.070	0.165	0.40
TL6c	0.368	0.010	-0.271	0.084	0.619	0.40
TL7	0.411	0.002	-0.287	0.140	0.559	0.40
TL7a1.Nea	0.396	0.029	-0.322	0.217	0.498	0.39
TL7a1.Far	0.392	0.032	-0.326	0.233	0.481	0.39
TL7a	0.000	-0.000	-0.000	0.424	0.047	-0.16
TL7b	-0.319	-0.420	0.000	-0.091	-0.132	0.15
TL8.Near	-0.278	-0.762	-0.084	-0.537	-0.061	-0.28
TL8.Far	-0.277	-0.760	-0.092	-0.564	-0.045	-0.27
TL9	-0.280	-0.638	-0.135	-0.640	-0.000	-0.26

Load : Dead Weight + Pressure 2 + Thermal 2 + Displacement 2

*** System Stresses (ANSI B31.3) ***

Point Name	In-Plane SIF	Out Plane SIF	Section Modulus	Stresses/psi Hoop	Longitu.	Principal	Code	Allow
TR1	1.00	1.00	0.01	517	918	929	1376	2000
TR2.Near	1.15	1.00	0.01	517	1116	1123	1233	2000
TR2.Far	1.15	1.00	0.01	517	1075	1083	1186	2000
TR2a	1.00	1.00	0.01	517	1509	1514	1800	2000
TR3	1.00	1.00	0.01	517	887	900	1078	2000
TR4.Near	1.00	1.00	0.01	517	494	577	611	2000
TR4.Far	1.00	1.00	0.01	517	641	672	924	2000
TR5	1.00	1.00	0.01	517	659	687	910	2000
TR5a	1.00	1.00	0.01	517	1124	1130	1560	2000
TR6.Near	1.00	1.00	0.01	517	1793	1796	1906	2000
TR6.Far	1.00	1.00	0.01	517	1752	1752	1919	2000
TR6a	1.00	1.00	0.01	517	2005	2005	2122	2000
TR6b	1.00	1.00	0.01	517	1648	1648	2507	2000
TR7.Near	1.00	1.00	0.01	517	1320	1320	1510	2000
TR7.Far	1.00	1.00	0.01	517	1364	1368	1473	2000
TR7a	1.00	1.00	0.01	517	1448	1452	2022	2000
TR7b	1.00	1.00	0.01	517	1525	1528	1831	2000
TR8.Near	1.00	1.00	0.01	517	994	1001	1237	2000
TR8.Far	1.00	1.00	0.01	517	957	958	1244	2000
TR9	1.00	1.00	0.01	517	274	518	417	2000
HE0a	1.00	1.00	0.02	805	694	994	1193	2000
HE0b.Near	1.23	1.02	0.02	805	509	937	1071	2000
HE0b.Far	1.23	1.02	0.02	805	843	882	1069	2000
HE1	1.00	1.00	0.02	805	830	874	1023	2000
HE2.Near	1.23	1.02	0.02	805	1383	1388	1485	2000
HE2.Far	1.23	1.02	0.02	805	1389	1400	1500	2000
HE3	1.00	1.00	0.02	805	3584	3586	2869	2000
HE4.Near	1.00	1.00	0.02	805	1551	1560	1563	2000
HE4.Far	1.00	1.00	0.02	805	887	1002	1386	2000
HE5	1.00	1.00	0.02	805	936	1039	1532	2000
HE6.Near	1.23	1.02	0.02	805	3413	3423	3511	2000
HE6.Far	1.23	1.02	0.02	805	3196	3198	3326	2000
HE6a	1.00	1.00	0.02	805	2116	2118	2442	2000
HE6b	1.00	1.00	0.02	805	1696	1699	1601	2000
HE6c	1.00	1.00	0.02	805	1621	1624	1438	2000
HE6d	1.00	1.00	0.02	805	1507	1509	2366	2000
HE7.Near	1.23	1.02	0.02	805	2405	2406	2581	2000
HE7.Far	1.23	1.02	0.02	805	2549	2549	2700	2000
HE7a	1.00	1.00	0.02	805	2070	2070	1815	2000
HE7b	1.00	1.00	0.02	805	1619	1619	1956	2000
HE7c	1.00	1.00	0.02	805	2002	2002	1723	2000
HE8.Near	1.23	1.02	0.02	805	717	810	975	2000
HE8.Far	1.23	1.02	0.02	805	691	805	943	2000
HE9	1.00	1.00	0.02	805	336	805	462	2000
TL1	1.00	1.00	0.01	517	747	773	1098	2000
TL2	1.00	1.00	0.01	517	1011	1020	1165	2000
TL2a	1.00	1.00	0.01	517	1584	1588	1879	2000

Load : Dead Weight + Pressure 2 + Thermal 2 + Displacement 2

*** System Stresses (ANSI B31.3) ***

Point Name	In-Plane SIF	Out Plane SIF	Section Modulus	Stresses/psi Hoop	Longitu.	Principal	Code	Allo
TL3	1.00	1.00	0.01	517	922	932	1095	200
TL4.Near	1.00	1.00	0.01	517	511	580	636	200
TL4.Far	1.00	1.00	0.01	517	959	981	1347	200
TL5	1.00	1.00	0.01	517	1017	1035	1372	200
TL5a	1.00	1.00	0.01	517	1569	1578	1845	200
TL6.Near	1.00	1.00	0.01	517	1988	1997	2117	200
TL6.Far	1.00	1.00	0.01	517	1934	1934	2167	200
TL6a	1.00	1.00	0.01	517	2303	2303	2441	200
TL6b	1.00	1.00	0.01	517	1833	1833	2743	200
TL6c	1.00	1.00	0.01	517	960	960	1144	200
TL7	1.00	1.00	0.01	517	1247	1247	1428	200
TL7a1.Nea	1.00	1.00	0.01	517	915	1126	1388	200
TL7a1.Far	1.00	1.00	0.01	517	1194	1199	1297	200
TL7a	1.00	1.00	0.01	517	1495	1498	2092	200
TL7b	1.00	1.00	0.01	517	1477	1481	1751	200
TL8.Near	1.00	1.00	0.01	517	981	988	1222	200
TL8.Far	1.00	1.00	0.01	517	946	947	1236	200
TL9	1.00	1.00	0.01	517	258	518	393	200

*** System Maxima ***

Maximum X displacement = -0.481 inch at point HE8.Near
Maximum Y displacement = -0.807 inch at point TR8.Near
Maximum Z displacement = -0.326 inch at point TL7a1.Far

Maximum X rotation = -0.770 degree at point TR9
Maximum Y rotation = 0.619 degree at point TL6c
Maximum Z rotation = 0.414 degree at point TL5a

Maximum X force = -110 lb at point HE3
Maximum Y force = 46 lb at point HE7b
Maximum Z force = -45 lb at point HE6a

Maximum X moment = 32 inch-lb at point HE7.Far
Maximum Y moment = 55 inch-lb at point HE6.Near
Maximum Z moment = 44 inch-lb at point HE3

Maximum hoop stress = 805 psi at point HE0a
Maximum longitudinal stress = 3584 psi at point HE3
Maximum principal stress = 3586 psi at point HE3
Maximum code stress = 3511 psi at point HE6.Near
Maximum stress ratio (code/allowable) = 0.18 at point HE6.Near

FERMILAB ENGINEERING NOTE	SECTION	PROJECT	SERIAL-CATEGORY	PAGE
	RD/DØ	DØ SOLENOID UPGRADE	3823.111	A1

SUBJECT	NAME	
THERMAL CONTRACTION ANALYSIS SOLENOID THERMAL MOVEMENT	RUSS RUCINSKI	
	DATE 10/12/93	REVISION DATE

DUE TO THE HIGH STRESS GENERATED AT HE1 IN CASE 4 OF A PREVIOUSLY DONE ANALYSIS AND OTHER CHANGES SUCH AS ALLOWABLE STRESS FROM 14.0 TO 8.0, t_{WALL} = 0.065" VS. 0.035". I WILL RE-RUN THE THERMAL CONTRACTION ANALYSIS BASED ON CURRENT LATEST DESIGN INFORMATION.

THE LHe TUBE CONNECTION TO THE SOLENOID WILL BE ROUTED:

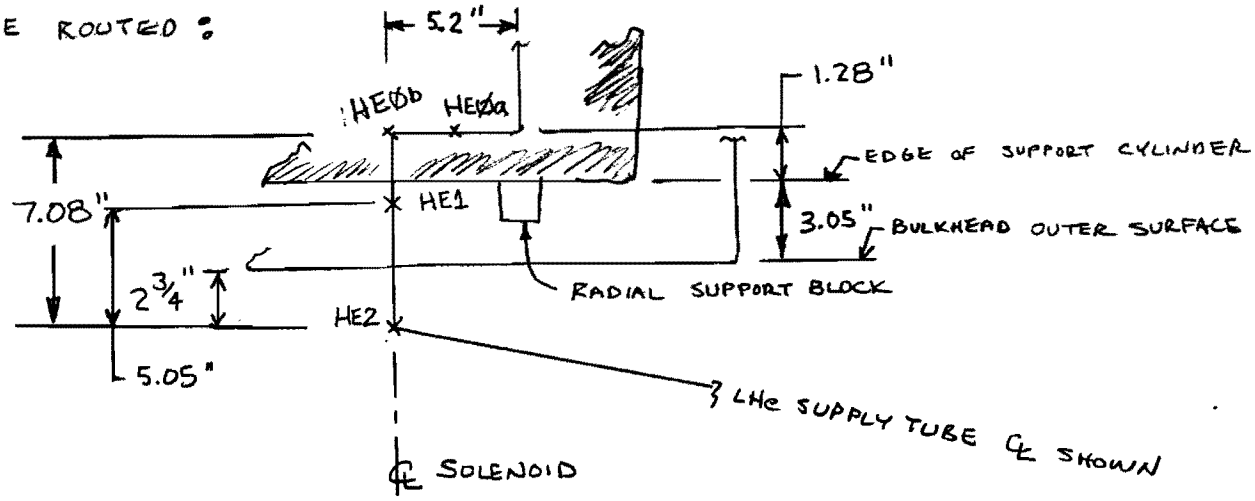

THE ABOVE IS BASED ON INFORMATION IN THE DESIGN REPORT FIGURES 4.4, 4.12 AND A CONVERSATION WITH BRUCE SQUIRES THAT SAYS THE COOLING TUBE WILL BE:

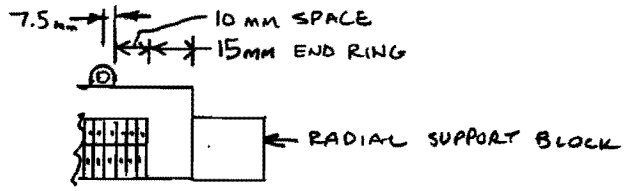

THE FIRST ELBOW AT HE1 WILL NOT BE WELDED TO THE SUPPORT CYLINDER. THE 2ND WILL. I WILL ASSUME MIDWAY BETWEEN THE TWO (AT HEØ) THE TUBE IS "ANCHORED". THIS ANCHOR (HEØ) WILL BE DISPLACED WHEN THE SOLENOID COOLS.

FERMILAB ENGINEERING NOTE	SECTION	PROJECT	SERIAL-CATEGORY	PAGE
	RD/DØ	DØ SOLENOID UPGRADE	3823.11P	A2

SUBJECT	NAME	
	RUSS RUCINSKI	
	DATE	REVISION DATE

DISPLACEMENT WHEN SOLENOID COOLS:

$\int_0^{300K} \lambda \, dT$

FOR ALUMINUM

RADIAL (ASSUME VERTICAL, y)

$\Delta y = R \cdot \alpha = (659.8 \text{ mm})(0.0043 \text{ IN/IN}) \times \frac{1 \text{ IN.}}{25.4 \text{ mm}} = .112 \text{ IN.}$

ALONG Z AXIS:

CENTER OF THE SOLENOID MOVES TOWARD THE CHIMNEY END .197 IN. {REF. 8-5-93 E-MAIL WANDS TO SQUIRES} HANDOUT BY BRUCE 9/31/93 RADIAL CLEARANCE....

THE CYLINDER SHRINKS $\Delta = (\frac{1}{2} \text{LENGTH})\alpha = (51.085 \text{ IN})(.0043) = 0.220 \text{ IN.}$

$\Delta Z_{TUBE} = .197 \text{ IN} - .220 \text{ IN} = .023 \text{ IN.}$ ~ NEGLIGIBLE. SAY Ø.Ø