EC CRYOSTAT FABRICATION CONTRACT

3740.224-EN-325

R. D. LUTHER
August 20, 1991

Checked by: _____

Dϕ Eng. Note 3740.224-EN-325

Fermilab

Fermi National Accelerator Laboratory
P.O. Box 500 • Batavia, Illinois • 60510

November 14, 1988

Process Engineering Inc.
P. O. Box 467
Plaistow, NH 03865

Attention: Kenneth L. Paul

Subject: Fermilab Subcontract #957560

Dear Mr. Paul:

(1) Enclosed is (1) fully executed copy of subject subcontract.

(2) (a) We will incorporate in Supplemental Agreement #1 the Fermilab calculations for the structural design to Section VIII of the ASME Code after your review is concluded on November 16, 1988.

(b) We will also incorporate into Supplemental Agreement #1 agreement that Fermilab will have ultimate responsibility for obtaining necessary state permits in those instances where all reasonable effort by PSI has failed to obtain the necessary permit issuance by the State or States needed to ensure delivery. PSI will absorb the normal special permit charges involved, but is not obligated to reimburse Fermilab for it's own labor costs incurred in Fermilab efforts to obtain issuance of permits, in these instances.

Very truly yours,

L. O. Vonasch

L. O. Vonasch
Sr. Contract Administrator

LOV:lat
cc: C. Weissert-Jagger
R. Luther

SUBCONTRACT #957560

FOR

LIQUID ARGON CRYOSTATS

WITH PROCESS ENGINEERING, INC.

RECEIVED

NOV 2 1988

PROCESS ENGINEERING INC.

SUBCONTRACT NO. 957560

Under U. S. Government
(Represented by the Department of Energy)

CONTRACT DE-AC02-76CH03000

BETWEEN Universities Research Association, Inc.
A Corporation Organized and Existing Pursuant to
The District of Columbia Non-Profit Corporation Act
With offices in the vicinity of Batavia, Illinois
(hereinafter sometimes referred to as Fermilab or Laboratory)

AND PROCESS ENGINEERING INC.
P. O. Box 467
Plaistow, NH 03865

(hereinafter sometimes referred to as Subcontractor or Seller)

This Subcontract is effective as of the 28th day of October 1988.

WHEREAS, Fermilab, pursuant to United States Government Contract DE-AC02-76CH03000 is responsible for varied requirements and

WHEREAS, Fermilab, in connection with said responsibility, desires to engage Subcontractor to perform work, to furnish equipment and material, and to furnish services, in accordance with Exhibit A, Schedule and Supplementary Terms and Conditions, and Exhibits B through D and all other terms and conditions hereinafter set forth:

Now, THEREFORE, in consideration of the mutual promises and covenants herein contained, the parties agree as follows:

1. An order is hereby placed with Subcontractor for furnishing to Fermilab of the work, equipment, materials and/or services set forth in the below listed exhibits which are attached hereto.

ATTACHMENTS:

EXHIBIT A - Schedule and Supplementary Terms and Conditions
EXHIBIT B - Specification No. 3740.224-ES-255929-A.

EXHIBIT C - Fermilab Subcontract General Provisions (FL-1) with Addendum I (FL-30)
Clean Air and Water (FL-24)
Progress Payments-Total Costs (Sm. Business) (FL-27A), and Labor Surplus Area Sub-Subcontracting Program (FL-25).
(FL-2), Fermilab Fixed Price Supply Subcontract Terms and Conditions. (FL-31), Addendum to FL-2.

2. Final acceptance of the work, equipment, material and/or services by Fermilab or its designee will be as provided in the attached exhibits.

3. In the event of an inconsistency between the provisions of this subcontract, it shall be resolved by giving precedence to the exhibits in the order as listed above.

4. Nothing in this subcontract shall be deemed as creating any relationship other than that of Buyer and Seller between Fermilab and the Subcontractor and Subcontractor shall not interpret any clause contained herein as being binding or purporting to bind the United States Government, its officers or agents.

5. The total fixed price of this subcontract is established at One Million, One Hundred Thirty Three Thousand, Six Hundred Dollars and No Cents ($1,133,600.00) subject to any limitations herein. Payment shall be made as provided in exhibits attached hereto. The Subcontractor shall submit certified invoices bearing this subcontract number, in duplicate, to Accounts Payable, Fermi National Accelerator Laboratory, P. O. Box 500, Batavia, Illinois 60510. Unless otherwise provided herein, progress payments and escalation adjustments will not be made. Drafts will not be honored.

6. The following alterations in this Subcontract were agreed to by the parties before execution of this document: None

IN WITNESS WHEREOF, the parties have caused this Subcontract to be executed by their agents duly authorized the date and year set forth below the respective signatures.

PROCESS ENGINEERING INC.	UNIVERSITIES RESEARCH ASSOC., INC. FERMI NATIONAL ACCELERATOR LAB.
BY	BY
TITLE Exec. Vice President	TITLE James E. Finks, Jr. Head, Business Services
DATE November 10, 1988	DATE 14 Nov 88

I, Edmund M. Barry, certify that I am the Secretary of the Corporation named as Subcontractor herein; that Kenneth L. Paul who signed this Subcontract on behalf of the Subcontractor was then Exec. Vice President of said Corporation; that said Subcontract Agreement was duly signed for and on behalf of said Corporation by authority of its governing body and is within the scope of its Corporate powers.

IN WITNESS WHEREOF, I have hereunto affixed my hand and the seal of said Corporation.

(SEAL)

EXHIBIT A

SCHEDULE AND SUPPLEMENTARY TERMS AND CONDITIONS

EXHIBIT A

SCHEDULE AND SUPPLEMENTARY TERMS AND CONDITIONS

1.0 Quantity and Description

Furnish F.O.B. Fermilab, Batavia, Illinois 60510 the following:

1.1 Quantity - One (1) Each Liquid Argon Cryostat per Exhibit B (Spec.)

Liquid Argon Cryostat for the South End Calorimeter per Exhibit B, Spec., and Drwg. #3740.224-ME-273030 @ $566,800.00 EA.

1.2 Support Stanchions per Exhibit B, Spec.

Liquid Argon Cryostat for the North End Calorimeter per Exhibit B, Spec., and Drwg. #3740.224-ME-273065, Rev.A. Identical to South End Calorimeter except for nozzle locations @ $566,800.00 EA.

1.3 Both Cryostats exclude flexible support stanchions which will be supplied to manufacturer for installation in his shop.

A complete set of sepias for the South Cryostat is enclosed. The North End Calorimeter is a mirror image of the South; A complete set of sepias for the North Cryostat is enclosed.

1) The stanchions (including their attachment bolts, the thermal siphon discs, and the G-10 spacers) will be supplied by Fermilab for installation by the manufacturer at his facility.

2) Supply of the carriage is outside the scope of this contract. The sepias is included for information only.

2.0 Delivery Schedule and F.O.B. Point

Delivery F.O.B. Fermilab D-Zero jobsite, Batavia, Illinois 60510 is required as follows:

2.1 One (1) Each North End Liquid Argon Cryostat 10 months after award.

2.2 The South Liquid Argon Cryostat 4 months after receipt of the above unit.

3.0 Final Acceptance

Final Acceptance will be made at Fermilab by Laboratory personnel within sixty (60) days after receipt at Fermilab of each of the Liquid Argon Cryostats.

The requirements of the above paragraph are construed to be consistent with and cumulative to Article 4 entitled "Inspection" of Exhibit D (Fermilab Fixed Price Supply Subcontract Terms and Conditions).

4.0 Payment

4.1 Progress Payments

Progress payments shall be per FL-27A herein.

4.2 Final Payment

Final Payment will be made upon Final Acceptance at Fermilab; Final Acceptance will be concluded within sixty (60) days after receipt per Section 3.0 above.

5.0 Cognizant Fermilab Personnel

5.1 Direct administrative questions to L. O. Vonasch, Jr. at (312) 840-4166, TWX#910-3233, or TELEX#720-481.

5.2 Direct technical questions to Richard Luther at (312) 840-2322.

EXHIBIT B

SPECIFICATION NO. 3740.224-ES-255929-A

TECHNICAL SPECIFICATION

LIQUID ARGON CRYOSTATS
for the
DØ ENDCAP CALORIMETERS (EC)

Specification No. 3740.224-ES-255929-A

Originator: Richard D. Luther

Approved: _____
Group Leader

_____
Project Eng.

Sept. 22, 1988
Date

SPECIFICATION 3740.224-ES-255929-A
LIQUID ARGON CRYOSTATS
FOR THE
DØ ENDCAP CALORIMETERS (EC)
September 22, 1988

1. DESCRIPTION

1.1 This specification contains design, fabrication, testing, shipping, and documentation requirements for the Endcap Calorimeter (EC) cryostats for the D-Zero Project at the Fermi National Accelerator Laboratory (Fermilab) at Batavia, Illinois. The cryostats are seventeen foot diameter by eight foot long double-wall, vacuum/superinsulated vessels which will contain modules for the detection of sub-atomic particles in high-energy physics experiments. During operation each inner vessel will be filled with liquid argon at 90K.

1.2 The configurations of the cryostats are shown on the drawings which form a part of this specification (see Section 3). Each vessel consists of a cylindrical shell which is capped at one end by a standard torispherical head and at the other by a composite head. The spaces between the vessels contain superinsulation and vessel piping. In addition to the piping inlets the vessels also contain several large nozzles for special equipment. The inner vessel of each cryostat is supported by special thermal contraction stanchions which penetrate the outer vessel at four locations on the bottom side of the vessel. The outer vessel is also supported at these penetrations. The cryostats and internals are in turn supported by welded carriages. Technical requirements for the stanchions and carriages are given in other specifications.

1.3 The EC cryostats are two of three which make up the calorimeter for the DØ detector. The three vessels will be located in the paths of the beam lines of the main ring conventional and superconducting accelerators at Fermilab. These beam lines are contained in evacuated pipelines which will pass through the cryostats at two locations. The precise positioning required for these pipes along with the small clearances associated with the internal modules require that relatively tight tolerances be maintained during fabrication.

1.4 The cryostats will be completely fabricated, assembled, and tested in the seller's facility and shipped complete to Fermilab. All proposals must contain complete descriptions of the fabrication, assembly, testing, and shipping methods to be employed. After final testing and acceptance at Fermilab, detector modules and heat exchanger tubing will be installed in the cryostat by Fermilab personnel. In order to install the internals the cryostat heads will be cut off and rewelded by others in accordance with the rules of the National Board of Pressure Vessel Inspectors.

1.5 In this specification the supplier of the cryostats shall be referred to as the "seller", and the Fermi National Accelerator Laboratory shall be referred to as "Fermilab" or the "buyer".

2. SCOPE

2.1 The seller shall furnish all labor, equipment, and materials and shall perform all work necessary to design, fabricate, assemble, test, and deliver the cryostats in accordance with this specification.

2.2 Any conflicts between the requirements of this specification and those of any referenced drawings, specifications, or Codes shall be brought to the attention of the buyer for resolution.

3. DRAWINGS AND SPECIFICATIONS

The following shall be considered a part of this specification:

Drawings - See Attachment 1.

Reports - 3740.510-EN-54 "Design Review of the D-Zero Cryostats, June 26, 1986.

4. GENERAL REQUIREMENTS

4.1 Design Criteria

4.1.1 The inner vessel of each cryostat shall be designed, fabricated, tested, and stamped in accordance with the latest edition of Section VIII, Division 1, of the ASME Boiler and Pressure Vessel Code. The vessel shall be registered with the National Board of Boiler and Pressure Vessel Inspectors. The inner vessel shall be designed for internal pressure plus liquid head (16 ft of argon) with the jacket evacuated, and for full vacuum with the jacket at atmospheric pressure.

4.1.2 The structural design of each outer vessel under the vacuum loading shall be in accordance with the rules of the Compressed Gas Association Specification CGA-341. Specifically, the outer vessel shall be designed to provide a minimum collapse pressure of 30 psi (differential) per paragraph 1(f)(3) of CGA-341. In addition each outer vessel shall be designed for 15 psig internal pressure in accordance with the rules of the ASME Code, Section VIII, Division 1. No stamping is required. The general quality of the outer vessels shall be consistent with that of the inner vessels; e.g., assembly and welding procedures, fabrication tolerances, material documentation, etc., shall be comparable to that provided for the inner vessels. Third-party inspection of the outer vessels is not required.

4.1.3 The design of the annular space piping shall be in accordance with ANSI B-31.3.

4.2 Materials

4.2.1 All components, including the vessels, nozzles, and piping, shall be fabricated from type 304 austenitic stainless steel suitable for cryogenic service unless otherwise noted on the drawings.

4.2.2 Documentation and traceability for all materials shall be consistent with the requirements of Section VIII, Div. 1, of the ASME Code.

4.3 Nozzles

A list of nozzles for each cryostat is included on the plan view drawing (ME-273030 for the south EC and ME-273065 for the north EC). All nozzles are to be provided with closures as noted on the drawings. The sealing system to be used for nozzles N1, N2, and N11 will incorporate lead-coated metal c-rings in combination with rubber o-rings. Fermilab will provide the metal c-rings to the manufacturer for use in the pressure and vacuum testing of the cryostat at the manufacturer's facility. O-rings for these and other nozzles shall be supplied by the manufacturer.

4.4 Tolerances and Clearances

4.4.1 As indicated on the attached drawings, tolerances required for the cryostats are more restrictive than customary pressure vessel tolerances. Adequate clearances must be maintained in order to provide the volume necessary for the internal components to be installed in the vessels. The effects of these tolerances (cost, schedule, feasibility, etc.) shall be considered in the seller's proposal.

4.4.2 Any tolerances which the manufacturer considers to be infeasible or prohibitively expensive shall be immediately identified to the purchaser.

4.5 Head Removal Considerations

As noted above the cryostat heads will be removed and rewelded at Fermilab to allow installation of the internals.

5. DESIGN REQUIREMENTS

5.1 Design Conditions

5.1.1 Design pressure - Inner: +15 psig with the jacket evacuated and full vacuum with the jacket at atmospheric pressure.
- Outer: Full vacuum and +15 psig.

5.1.2 Operating temperature = 90K

5.1.3 Cryogen: Liquid argon. (The volume of the internals is such that 3000 gallons of liquid completely fills each inner vessel. Note that the weight of argon displaced by the internals must also be considered in the design of the cryostat shell.)

5.1.4 Weight of internal modules = 450,000 lbs per cryostat.

5.1.5 Radiography: See drawing 3740.224-ME-273071

5.1.6 Seismic loads: Uniform Building Code

5.1.7 Wind loads: 10 psf (The vessel will be temporarily located outdoors during testing at Fermilab.)

5.2 Component Design

5.2.1 The attached drawings include dimensions and thicknesses for most components. These were calculated for the specified design conditions in accordance with the criteria given above. A report presenting an independent review of this design is included with this specification. (Report No. 3740.510-EN-54, see Section 3 above.) Additional calculations will be available to the seller after award of the contract. However, the calculations and the review shall be considered to be informal, and *it shall be the responsibility of the seller to ensure that the vessels supplied meet the requirements of this specification.*

5.2.2 The seller shall supply design calculations and drawings for the buyer's review before material is ordered. The seller shall include ten (10) working days in his schedule for Fermilab review of calculations and drawings.

5.2.3 Certain dimensions on the drawings are specified as maximum or minimum values. These specifications are made for process reasons and shall be maintained. Any conflicts between given dimensions and the specified design criteria and conditions shall be immediately brought to the attention of the purchaser.

5.3 Vessel Supports

In order to maintain the detector location throughout multiple cooldown cycles, the inner vessels and the internal module structures are supported on custom-designed, flexible, thermal contraction support stanchions. These will be fabricated and supplied by others for installation in the cryostats by the seller at his facility. Drawings of the stanchions are included with this specification, and technical requirements for the stanchions are given in Technical Specification 3740.224-ES-273097.

5.4 Support Carriage

The cryostats will be mated with carriages at Fermilab. The carriages are not included in the scope of supply of the cryostats.

5.5 Vacuum/Superinsulation

5.5.1 The cryostats shall be insulated with crinkled, aluminized mylar type superinsulation. The drawings have provided a nominal insulation thickness of one inch at an application density of 40-60 layers per inch. The installed apparent mean thermal conductivity shall be no more than 1.0 μW/cm-K, excluding heat leak through the nozzles, piping, and supports, but including the effects of the superinsulation support system.

This shall be documented in the design calculations and submitted to the buyer for approval before the insulation is ordered.

5.5.2 Installation, hangers, and details shall be in accordance with the insulation manufacturer's recommendations and consistent with good cryogenic insulation practice.

6. FABRICATION REQUIREMENTS

6.1 The inner vessels shall meet the fabrication requirements of the ASME Code, and their quality shall be consistent with vacuum/superinsulated cryogenic service. In addition, the fabrication quality of the outer vessels (fit-up, welding quality, etc.) shall be comparable to that of the inner vessels.

6.2 The fabrication quality of the internal piping shall be in accordance with ANSI Standard B-31.3 and consistent with the cryogenic/vacuum service.

6.3 Fermilab reserves the right to witness any or all aspects of the fabrication process in the seller's facility.

6.4 Welding

6.4.1 All welding shall be performed by welders qualified in accordance with Section IX of the ASME Code. All welding procedures shall also be qualified in accordance with Section IX.

6.4.2 Radiography and other nondestructive evaluation requirements are given on drawing 3740.224-ME-273071.

6.4.3 Temporary attachment welds shall be avoided wherever possible. Any such welds which are used shall be made using qualified welders, procedures, and materials. After removal of the temporary weld the vessel surfaces shall be restored to their original condition and visually examined for signs of pitting, cracking, contamination, etc.

6.5 Cleanliness

6.5.1 The seller shall exercise care to maintain general cleanliness and to avoid contamination of the stainless steel materials. Surfaces shall be cleaned as fabrication progresses.

6.5.2 Internal surfaces shall be cleaned to remove all traces of oil, grease, and other chemical contaminants. Visual examination under strong white light shall demonstrate the absence of all contaminants and of any defects such as dirt, scale, weld spatter, metal chips, and sharp edges. In addition, wipe tests shall reveal no evidence of oil residue nor any appreciable discoloration of the wiping media other than that due to oxidation of the parent metal.

6.5.3 The seller shall develop written procedures for achieving the required cleanliness. These procedures shall be submitted to the buyer for approval before fabrication is begun.

7. TESTING REQUIREMENTS

7.1 A written procedure for each test required below shall be submitted to the buyer for approval at least 30 days before the test is to be performed. The buyer shall be notified at least five days before each test is conducted. The buyer or his representative shall have the option of witnessing these tests.

7.2 Written test results shall be provided to the buyer within three days after the completion of each test.

7.3 Pressure Testing

7.3.1 The inner vessels must be hydrostatically or pneumatically tested in accordance with the rules of the ASME Code. If hydrotested, the chloride content of the test water shall not exceed 200 ppm. After the hydrotest the vessel shall be rinsed as necessary to remove residue, scum, etc., and then dried to prevent contamination. If forced-air drying is employed, the air shall be oil-free.

7.3.2 All piping shall be pneumatically tested. The test pressure for the nitrogen piping for the heat exchangers shall be 150 psig. The test pressure for all other lines shall be 80 psig. These tests may be performed before the lines are installed in the vessel.

7.3.3 Pneumatic tests shall be performed with dry, oil-free air or nitrogen gas.

7.4 Leak Testing

7.4.1 During fabrication all welded connections within the piping assemblies shall be leak tested with a helium mass spectrometer. Any detectable leakage shall be corrected.

7.4.2 The total leak rate for the cryostat annular space shall be shown by helium mass spectrometer testing to be less than 1×10^{-9} std-cc/sec.

7.4.3 The vacuum leak tests shall be conducted in accordance with the seller's standard testing procedures. However, the following minimum requirements shall also apply:

7.4.3.1 The mass spectrometer used shall have a minimum sensitivity of 1×10^{-9} std-cc/sec.

7.4.3.2 The gas used for the test shall contain at least 10% Grade A helium with the balance being dry, oil-free air or nitrogen.

7.4.3.3 Except for background noise, there shall be no indication of leakage with the mass spectrometer on the lowest scale.

7.4.3.4 The accuracy of the tests shall be verified by a calibration check of the mass spectrometer before and after each test. The calibration tests shall be made on the lowest scale using a calibrated helium leak.

8. SHIPPING REQUIREMENTS

8.1 The seller shall develop detailed procedures for handling and shipping the cryostats. These shall be submitted to the buyer for approval at least 30 days before the vessels are loaded for shipment.

8.2 Drawing 3740.224-ME-273045 shows a temporary stabilizing trunnion for the inner vessel which is to be fitted on each cryostat at the relief nozzle opening (N12). This trunnion serves to stabilize the inner vessel during transport and is designed for shipping loads of 2g's acting along the trunnion center line and 5g's acting transverse to the center line. The seller shall notify the buyer if the loads expected during transport exceed these values. The trunnion is designed to resist relative motion between the inner and outer vessels. It is not designed to be a lifting point in the vertical orientation. Lugs for lifting the cryostat are shown on drawing 3740.224-ME-273039 and 273040). All other shipping, lifting, and handling devices or equipment required shall be designed and/or supplied by the seller.

8.3 All external piping connections shall be sealed during shipment with metal covers as shown on the drawings. The annular space need not be evacuated during shipment. However, provisions shall be made to prevent excessive contamination of the vacuum space (e.g., purging with inert gas). Acceptance of the cryostat will be made only after vacuum insulation integrity is verified at Fermilab

8.4 Any external connection containing a bellows shall be suitably protected to prevent damage to the bellows during shipment.

9. DOCUMENTATION

9.1 Three copies of all drawings and design calculations shall be submitted to the buyer for approval before material is ordered or fabrication is begun. Five copies of the final drawings, including a full set of as-built drawings, and three copies of the final design calculations shall be submitted no later than 30 days after shipment of the cryostat.

9.2 Three copies of all welding procedures to be used shall be submitted for approval prior to the start of fabrication.

9.3 Three copies of the following procedures shall be submitted at least 14 days prior to their use:

9.3.1 Cleaning procedures.

9.3.2 Helium mass spectrometer test procedures.

9.3.3 Pneumatic and/or hydrostatic test procedures.

9.3.4 Laydown, loading, preparation, and shipping procedures.

9.4 Three copies of documented results of each pressure and mass spectrometer test shall be submitted within three days after completion of the test.

9.5 Three copies of all certified material test reports and certificates of compliance for all materials shall be submitted as they become available.

9.6 Three copies of the ASME Code Data Report for the inner vessel shall be submitted with the final drawings.

*****

ATTACHMENT 1 - DRAWING LIST

Specification 3740.224-ES-255929-A

Drawing Number	Rev	Title
South EC Drawings		
3740.224-ME-273030		SOUTH EC CRYOSTAT (PLAN)
-ME-273035		SOUTH EC. SECT G-G - N3,N5,N14,N15 DETAILS
-ME-273039		SOUTH EC. VIEW J-J - N13/N19 NOZZLE DETAILS
-ME-273041		SOUTH EC. ANNULAR SPACE CRYO. PIPING
-ME-273042		SOUTH EC. ANNULAR SPACE INSTR. TUBING
North EC Drawings		
-ME-273065		NORTH EC PLAN
-ME-273037		NORTH EC. SECT F-F
-ME-273043		NORTH EC. ANNULAR SPACE CRYO PIPING
-ME-273044		NORTH EC. ANNULAR SPACE INSTR. TUBING
Common Drawings		
3740.220-ME-222256	N	PARAMETER LAYOUT - ELEVATION
-ME-273031		SECTION A-A (273030) - N1/N2 NOZZLE DETAILS
-ME-273032		SECT B-B - N1/N11 DETAILS
-ME-273033		SECT C-C, D-D - N4,N6,N8,N10 DETAILS
-ME-273034		SECT E-E, F-F - N7/N9 NOZZLE DETAILS
-ME-273045		TOP SHIPPING TRUNNION GENERAL ARRANGEMENT
-ME-273046		BEAM TUBE AREA FABRICATION DRAWING
-ME-273047		SUPPORT STANCHION GENERAL ARRANGEMENT
-ME-273048		FLEXIBLE SUPPORT ASSEMBLY
-ME-273049		STANCHION DETAILS
-ME-273051		COVER PLATE DETAILS
-MC-273052		N11P - N11V INSTRUMENTATION PORT FLANGE
-MD-273053		NOZZLE DETAIL HIGH VOLTAGE FLG #N2P-N2V
-MD-273054		NOZZLE DETAILS SIGNAL PORT FLG #N1P-N1V
-MD-273055		TOP TRUNNION FLANGE
-MC-273056		BEAM TUBE AREA VACUUM TUBE FLANGE
-MD-273057		BEAM TUBE AREA RETAINER FLANGE
-MD-273058		BEAM TUBE AREA MOUNTING FLANGE
-MC-273059		N14V DIFFUSION PUMP FLANGE
-MB-273060		VACUUM CLOSURE PLATES
-MD-273061		COLD VALVE PORT N3V, N17V, PIPE
-MD-273062		COLD VALVE PORT FLANGE N3V
-MD-273063		N6V RUPTURE DISC FLANGE
-MD-273064		N4V RELIEF VALVE FLANGE
-MC-273068		N13V ROUGHING PORT FLANGE
-MC-273069		N7V INSTR. TUBE FLANGE
-MC-273070		THERMAL STANDOFF (FOR TUBING)
-ME-273071		VESSEL WELD DETAILS

Battelle
Columbus Division
505 King Avenue
Columbus, Ohio 43201-2693
Telephone (614) 424-6424
Telex 24-5454

June 26, 1986

Mr. George Mulholland
Fermi National Accelerator Laboratory
Pine & Kirk Roads, Mail Stop 306
Bataria, Illinois 60510

Dear Mr. Mulholland:

D-Zero Cryostat Design Review
Subcontract 999480

The D-Zero Cryostat cyrogenic vessel design report is transmitted in fulfillment of the subject contract. This is the final report and completes the scope of this project.

We look forward to supporting the Fermilab in the future by providing design review services for the D-Zero modules.

Sincerely,

Bernard F. Saffell
Program Manager Advanced Materials
Department

BFS:lt

cc: L. O. Vonasch, Jr.
K. Krempetz

DØ ENGR. NOTE #3740.510-EN-54
DØ NOTE #419

FINAL REPORT

Subcontract No. 999480

on

DESIGN REVIEW OF THE D-ZERO CRYOSTATS

to

FERMI NATIONAL ACCELERATOR LABORATORY

June 26, 1986

by

M. J. Rosenfeld and B. F. Saffell

BATTELLE
Columbus Division
505 King Avenue
Columbus, Ohio 43201

TABLE OF CONTENTS

	Page
I. SUMMARY	1
II. ANALYSIS	1
A. ACCEPTANCE CRITERIA	1
B. CENTRAL CALORIMETER VESSELS	3
B.1. Description of Central Calorimeter	3
a. Geometry	3
b. Vessel Contents	3
c. Materials	5
d. Method of Support	5
e. Other Components	6
f. Loadings	8
B.2. Minimum Shell Thicknesses and Maximum Pressures	9
a. Joint Efficiency	9
b. Cylindrical Shells	9
c. Formed Heads	9
B.3. Primary and Secondary Stress Analysis	12
B.4. Nonsymmetric Loading	15
B.5. Reinforcing Rings	20
B.6. Piping	20
B.7. Nozzles	27
B.8. Local Shell Stresses at Nozzles	29

TABLE OF CONTENTS
(Continued)

	Page
C. ENDCAP CALORIMETER VESSELS	32
C.1. Description of the Endcap Calorimeter Vessels	32
a. Geometry	32
b. Vessels Contents	34
c. Materials of Construction	34
d. Method of Support	34
e. Other Components	35
f. Loadings	35
C.2. Minimum Shell Thicknesses and Maximum Pressures	35
a. Joint Efficiencies	35
b. Cylindrical Shells	36
c. Torispherical Rear Heads	37
d. Compound Front Heads	37
e. Aluminum Centerline Tubes	39
C.3. Primary and Secondary Stress Analysis	28
C.4. Nonsymmetric Loading	46
C.5. Reinforcing Rings	47
C.6. Piping	51
C.7. Nozzles	52
C.8. Local Shell Stresses at Nozzles	52

TABLE OF CONTENTS
(Continued)

	Page
D. VESSEL SUPPORTS	53
D.1. Description	53
D.2. Flex Plates	55
D.3. Support Stanchions	56
D.4. Shear Disc	56
D.5. Cradle Assemblies	58
E. THERMAL STRESS ANALYSIS	58
E.1. Analysis Methods	59
a. Acceptance Criteria	59
b. Axisymmetric Analysis	60
c. Nonaxisymmetric Analysis	60
E.2. Central Calorimeter Inner Vessel	61
a. Axisymmetric Temperature Solution	61
b. Axisymmetric Stress Solution	61
c. Fatigue Evaluation	65
d. Reinforcement Ring Evaluation	66
e. Nonaxisymmetric Analysis	67
f. Recommendations	70
E.3. Endcap Calorimeter Inner Vessel	70
a. Axisymmetric Temperature Solution	70
b. Axisymmetric Stress Solution	73
c. Fatigue Evaluation	74

TABLE OF CONTENTS
(Continued)

	Page
d. Reinforcement Ring Evaluation	74
e. Nonaxisymmetric Analysis	75
f. Recommendations	78
REFERENCES	79
APPENDIX A. CALCULATIONS	A-1
APPENDIX B. COMPUTER OUTPUT	B-1

LIST OF TABLES

Table 1. Estimated Weights, Central Calorimeter	5
Table 2. Specified Strengths and Allowable Stresses in Accordance with ASME Copde, Section VIII, Division 1 and 2 High Alloy 18Cr-8Ni Stainless Steel, SA-240 In Plate Form	6
Table 3. Minimum Thicknesses and Maximum Pressures, Cylindrical Shells, Central Calorimeter	10
Table 4. Design Collapse Pressures, Central Calorimeter Heads	11
Table 5. Primary and Secondary Stress Intensities Due to Internal Pressure, Central Calorimeter	18
Table 6. Deadweight Loading and Nonsymmetric Moments, Central Calorimeter	20
Table 7. Reinforcement Ring Bending Moments with Heads Removed, Central Calorimeter	23
Table 8. Thermal Expansion Stresses, Calculated by Chart Method	24
Table 9. Static Design Load Stresses, Pipe "E", 2-Inch Argon Relief Line	26
Table 10. Reinforcement Areas of Nozzles and Penetrations	27

LIST OF TABLES
(Continued)

Page

Table 11. Thermal Expansion and Deadweight Loads and Stresses, 2 Inch Nozzles 30

Table 12. Estimated Weights, Endcap Calorimeter 34

Table 13. Specified Material Properties in Accordance with ASME Code, Section VIII, Divisions 1 & 2, Seamless Extruded Aluminum, SB-214, Type 5083 35

Table 14. Minimum Thicknesses and Maximum Pressures, Cylindrical Shells and Torispherical Rear Heads, Endcap Calorimeter 36

Table 15. Minimum Thicknesses and Maximum Pressure Spheroidal Caps, Front Heads, Endcap Calorimeters 38

Table 16. Minimum Thicknesses and Maximum Pressure Concave Shell Segments, Front Heads, Endcap Calorimeters 40

Table 17. Minimum Thicknesses and Maximum Pressure Aluminum Centerline Tubes, Endcap Calorimeters 41

Table 18. Primary and Secondary Stress Intensities Due to Internal Pressure, Endcap Calorimeter 46

Table 19. Nonsymmetric Loading, Endcap Calorimeter, Stresses, PSI 47

Table 20. Reinforcement Ring Minimum Section Properties, Front Heads, Endcap Calorimeters 49

Table 21. Rear Reinforcement Ring Bending Moments With Rear Heads Removed, Endcap Calorimeter 51

Table 22. AISC Evaluation of Flex Plates 57

Table 23. Central Calorimeter Inner Vessel Shell Thermal Stress Intensity Summary 65

Table 24. Central Calorimeter Inner Vessel Reinforcing Ring Thermal Stress Intensity Summary 67

Table 25. Endcap Calorimeter Inner Vessel Shell Thermal Stress Intensity Summary 73

LIST OF FIGURES
(Continued)

		Page
Figure 16.	Schematic of Stress Output Regions Identified in Figures 14 Through 16	45
Figure 17.	Simplified Models for Dead weight Analysis	48
Figure 18.	Endcap Calorimeter Rear Reinforcement Ring Cross Section	50
Figure 19.	Vessel Support Assembly	54
Figure 20.	Axisymmetric TACO2D/SAVFEM Heat Conduction and Thermal Stress Model, Central Calorimeter	62
Figure 21.	Temeprature Profiles, 92.5 F/HR, Central Calorimeter	63
Figure 22.	Temperature Profiles, 185 F/HR, Central Calorimeter	64
Figure 23.	Simplified Models for Asymmetric Stress Analysis	68
Figure 24.	Moment Resistance, Central Calorimeter Reinforcement Ring	69
Figure 25.	Axisymmetric TACO2D/SAVFEM Heat Conduction and Thermal Stress Model, Endcap Calorimeter	71
Figure 26.	Temperature Profiles, 92.5 F/HR, Endcap Calorimeter	72
Figure 27.	Moment Resistance, Endcap Calorimeter Rear Reinforcement Ring	76
Figure 28.	SAVFEM 3-D Asymmetric Thermal Stress Model	77

I. SUMMARY

The D-Zero Cryostats are 204-inch diameter vessels containing liquid argon and specialized equipment at cryogenic temperatures that are to be used in particle physics experiments. The cryostat designs were reviewed to verify that they were adequate for the vessel's service requirements and were in compliance with the ASME Boiler and Pressure Vessel Code, Section VIII. Aspects of the vessel designs that were evaluated in accordance with code requirements included minimum shell thicknesses for pressure conditions, primary and secondary stress intensities under pressure and deadweight conditions, local reinforcement requirements, feedline piping thermal stresses and vessel support requirements.

The design review of the vessels, supports, and piping showed that they are adequate for the service requirements. Those aspects of the vessel designs that were addressed by Section VIII, Division 1 were found to comply. Those aspects of design not explicitly addressed by the Code were evaluated by other criteria as appropriate, and were found to possess a degree of safety consistent with the intent and philosophy of the Code.

Heat conduction and thermal stress analyses were performed to establish maximum safe cooldown rates. Thermal stress and fatigue considerations were addressed in accordance with Section VIII, Division 2.

The reader is alerted to the fact that the text reports general aspects and results of the design review. All calculations and computer output supporting the conclusions are provided as an appendix. The calculations fully document assumptions and methodologies, and should be referred to for specific information not reported in the text.

II. ANALYSIS

A. ACCEPTANCE CRITERIA

The vessels were reviewed for conformance to the requirements of the ASME 1983 Boiler and Pressure Vessel Code, Section VIII, Division 1, with Addenda through Summer, 1985[1]*. This criterion is hereinafter referred to as the Code or Division 1.

*See references at end of report.

Certain aspects of the vessel designs were of a nature not addressed by Division 1. Provision for such cases is made in Article U-2(g) of Division 1, requiring that the manufacturer provide details of design and construction which will be as safe as those provided by the Rules of Division 1. Toward this end, analyses were performed to establish that the designs possessed a degree of safety consistent with the intent and philosophy of Division 1. In such cases, other criteria were used such as Section VIII, Division 2, Alternative Rules(2), Section III, Nuclear Power Plant Components(3), or the AISC Manual of Steel Construction(4).

Division 1 Rules do not call for detailed stress analysis of common shell configurations, but rather, set a minimum shell thickness sufficient to maintain general primary stresses below two-thirds of the yield strength. Article UG-23(b)(1) states that the Rules recognize that high localized stresses exist at structural discontinuities, and that the design rules have been formulated to limit stresses to safe levels based on experience. The design rules are generally conservative with inherent Safety Factors of 3 to 4.

Section VIII, Division 2 and Section III emphasize detailed stress analysis to remove overly conservative aspects of conventional pressure vessel design, and to establish a minimum level of safety for vessels which may be used in severe service conditions. Section VIII-2 and Section III assign different allowable limits to stresses, depending on the load that generates the stress, the location of the stress and its distribution through the shell thickness. The different stress allowables reflect the importance of the stress to failure of the vessel, as defined by the Maximum Shear Stress Theory.(5,6) Thus, detailed stress analysis is an inherent aspect of Sections VIII-2 or III.

The acceptance criteria did not include limitations on deflecion, deformation or distortion of the vessels, except as was required to satisfy structural stability concerns. Also, the effects of tolerances in shell dimensions and shape on stresses were not considered.

B. CENTRAL CALORIMETER VESSELS

B.1. Description of Central Calorimeter Vessels

a. Geometry

Two vessels comprise the Central Calorimeter (CC) of the D-Zero Cryostat, an inner vessel containing liquid argon and instrumentation modules, and an outer vessel containing a vacuum for insulation. The vessels are shown in Figure 1. The vessels are toroidal, with noncircular cross sections.

Each vessel consists of an outer horizontal cylinder, with diameter approximately 2.5 times its length. Concentric with the outer cylinder is an inner cylinder that is approximately one-third the diameter of the outer cylinder, but roughly 40 percent greater in length. An annular formed head joins the two cylinders at each end. The head-to-shell joints are made tangential through the use of toroidal knuckles, similar to those of a common torispherical head.

b. Vessel Contents

The inner vessel of the Central Calorimeter will contain liquid argon at a temperature of 90 K (-300 F). The gauge pressure at the top of the vessel is specified as 30 psi, with an additional 10 psi head at the bottom of the vessel. The design pressure is 30 psi, however, the vessels were designed for the maximum pressure at their lowest points of 40 psi. The inner vessel will also experience a full vacuum (15 psi) during a purification procedure. This is considered part of the start-up cycle of operation.

The inner vessel will also contain a variety of instrumentation and material modules that are supported directly by the vessel supports such that they do not interact with the shells. The internal structure and equipment modules displace volume such that 5,000 gallons of fluid fill the vessel entirely.

The outer vessel will contain a vacuum (15 psi) to insulate the inner vessel. It was also evaluated for a 15 psi internal pressure condition.

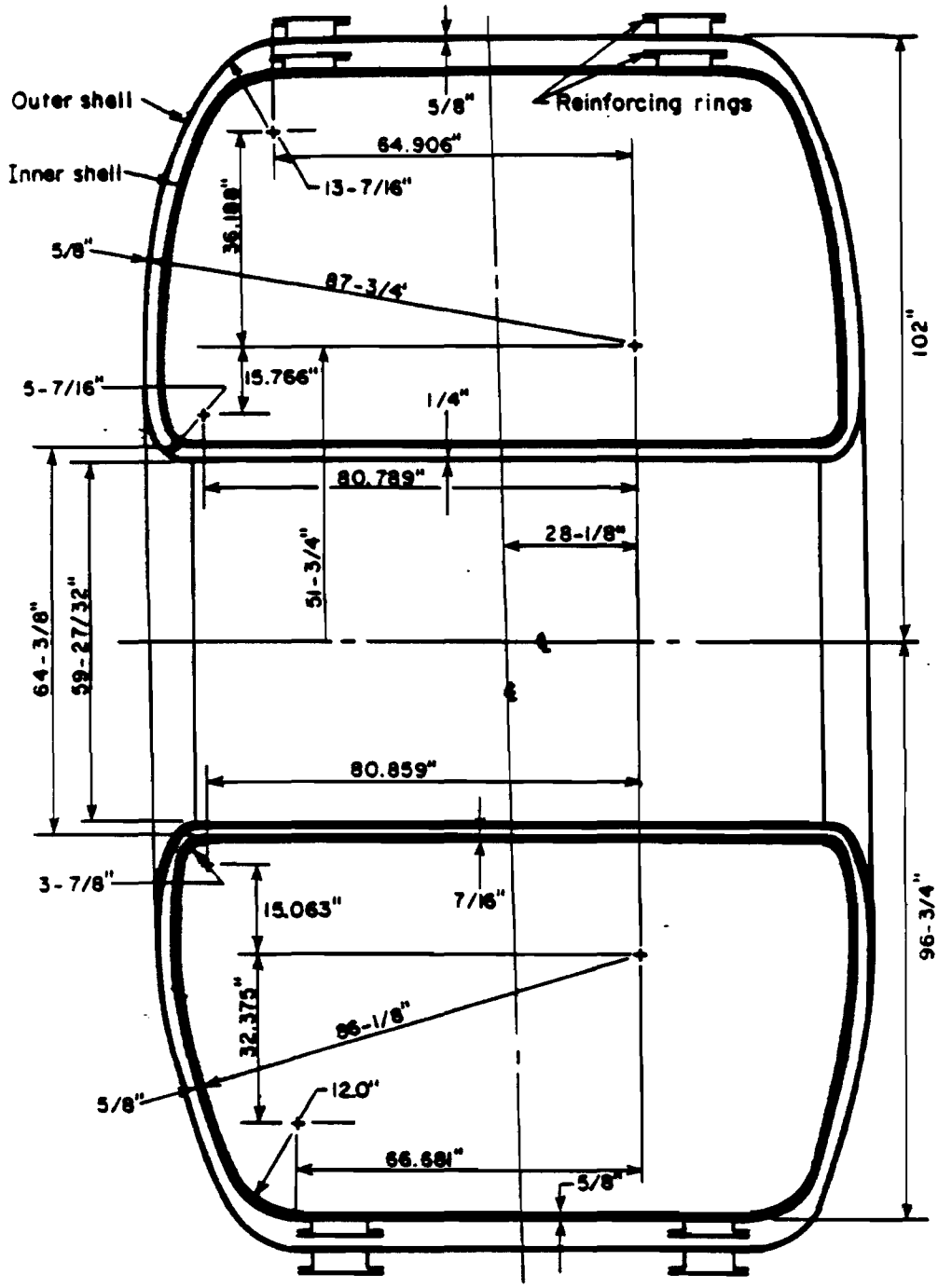

FIGURE 1. CENTRAL CALORIMETER VESSEL GEOMETRY

The estimated weights of the vessels and contents are shown in Table 1.

TABLE 1. ESTIMATED WEIGHTS, CENTRAL CALORIMETER

Item	Estimated Weight, kips
Inner Shell	24.0
Modules	633.0
5,000 Gal Liquid Argon	58.3
Total	715.3
Outer Shell	25.3

c. Materials

The vessels are to be constructed of a high alloy 18Cr-8Ni stainless steel. The Code specifies SA-240 in plate form, available in several grades. The specified minimum strengths and allowable stresses in accordance with Divisions 1 and 2 are shown in Table 2, for the various grades of SA-240 in plate form. Grade 304 was assumed to be material of construction for purposes of this review.

d. Method of Support

The inner vessel is supported on four stanchions, located as shown schematically in Figure 2. The stanchions are each supported by a number of vertical plates, made from Inconel 718. The plates allow thermal expansion and contraction of the vessel by deflecting in a reversed bending mode. Between the vessel stanchion and the flex plates is a thermal isolation pad to minimize heat transfer through the supports.

The support structure for the internal modules is also supported by the flex plate assembly. The vacuum vessel is supported on stanchions that encircle the flex plates, but that are structurally isolated from them. The

TABLE 2. SPECIFIED STRENGTHS AND ALLOWABLE STRESSES IN ACCORDANCE WITH ASME CODE, SECTION VIII, DIVISIONS 1 AND 2, HIGH ALLOY 18Cr-8Ni STAINLESS STEEL, SA-240 IN PLATE FORM

Grade	Specified Minimum Yield, ksi	Specified Minimum Tensile, ksi	Division 1 Allowable Stress, ksi [a]	Division 2 Design Stress Intensity, ksi [a]
304L	25	70	15.7	16.7
302	30	75	18.8	20.0
304[b]	30	75	18.8	20.0
304H	30	75	18.8	20.0
304N	35	80	20.0	23.3

Notes: (a) Maximum metal temperature not to exceed 100 F.
(b) Grade assumed for review.

vacuum vessel is not expected to differ significantly in temperature from ambient. The entire system is then supported on two built-up members of tapered box section, and mounted on rollers.

A complete description of the support design and results of the analyses performed is found in Section D of this report.

e. Other Components

Other components within the scope of the analysis of the CC vessels include 1½-inch and 2-inch piping located on the upper circumference of the argon vessel, and nozzles ranging in size from 4 to 12 inches in diameter at various locations throughout the inner and outer vessels.

Components or design details which were not within the scope of this study include

1. Piping or conduits larger than 2 inches which connect to the vessels
2. platforms, ladders, lugs, or other attachments to the vessels
3. internal instrumentation and material modules
4. support structure of the internal modules
5. electrical cable port closures

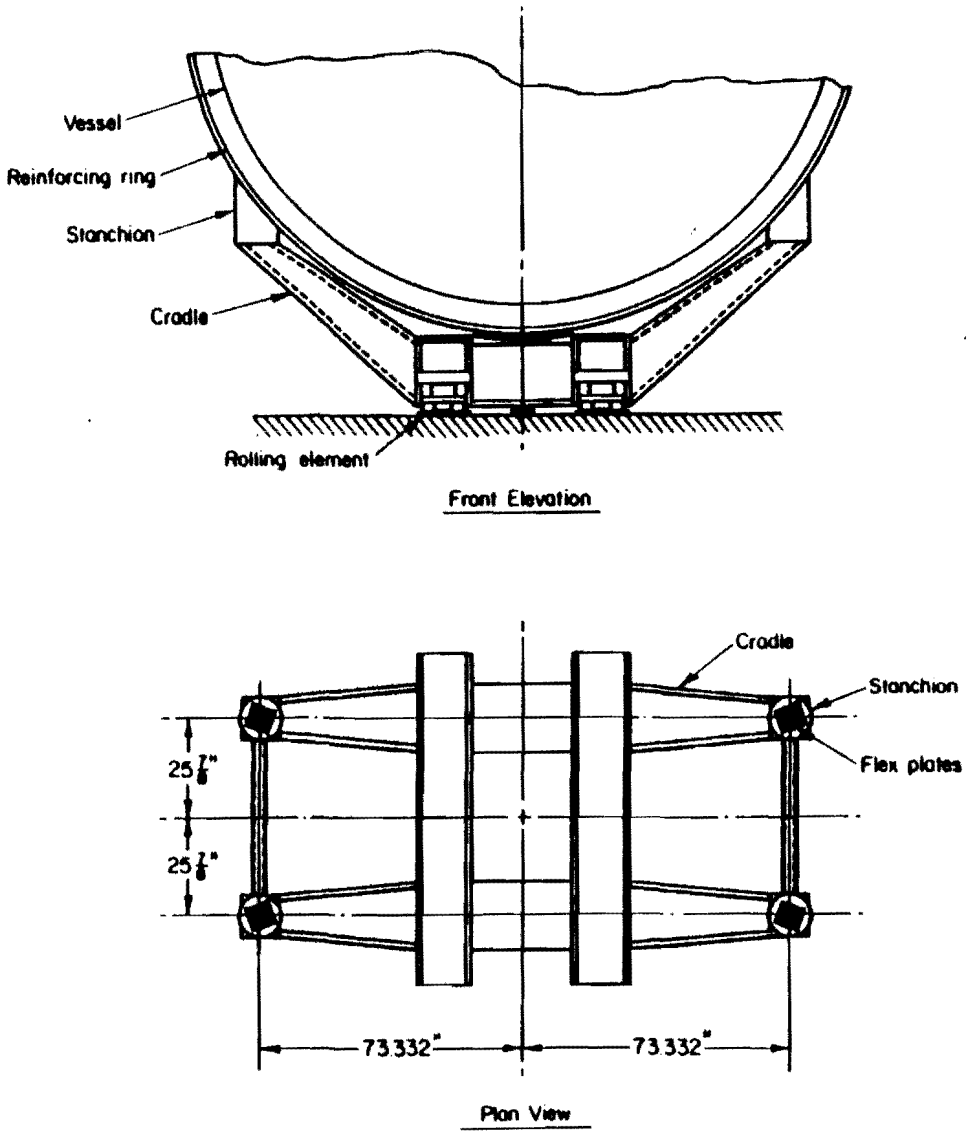

FIGURE 2. SCHEMATIC OF CENTRAL CALORIMETER VESSEL SUPPORTS

6. valves and fittings
7. metal bellows expansion joints.

f. Loadings

Loadings on the CC vessels that were considered include the following

1. Internal pneumatic pressure of 30 psi, which includes the effect of an external vacuum, plus 10 psi fluid head pressure, and 15 psi external pressure, inner vessel
2. Internal and external pneumatic pressures of 15 psi, outer vessel
3. Deadweights of empty shells, contained fluids, internal modules, small bore piping up to 2 inch NPS
4. Thermal expansion loads in the small bore piping and on the vessel supports
5. Local loads on the vessel shells due to thermal expansion and dead weight
6. Rating for 1,000 full pressure and full temperature cycles.

Loadings on the CC vessels that were not considered in the analysis include the following

1. Seismic accelerations
2. Non-seismic dynamic loads, such as nozzle thrust, wind load, vibration from reciprocating equipment, electromagnetic forces, etc.
3. Hydrotest requirements, in a position other than horizontal, and using a fluid other than water
4. Loads which may occur during fabrication, construction or transportation
5. Interaction with the internal modules or their supports.

B.2. Minimum Shell Thicknesses and Maximum Pressures

a. Joint Efficiency

The Code incorporates a Welded Joint Efficiency, E, in its strength calculations. The Joint Efficiency is essentially a level of confidence in the joint strength inspired by the degree of examination. Welded Joint Efficiencies for various degrees of examination and methods of construction are specified in Article UW-12[1]. A Joint Efficiency equal to 0.65 was considered in the subject analyses, corresponding to single-welded butt joints, visually, but not radiographically, examined. Use of a Joint Efficiency of 0.65 would be considered overly conservative if the welds are radiographed or double-welded, per UW-12[1]. The Joint Efficiency generally is significant only in design for internal pressure.

b. Cylindrical Shells

The minimum required thicknesses of the cylindrical shells for the design pressures were calculated in accordance with Articles UG-27 and UG-28[1]. The maximum allowable pressures for the design thicknesses were also calculated accordingly. The results of these calculations are shown in Table 3, for an assumed Joint Efficiency of 0.65. The minimum required shell thicknesses for the design pressures were less than the design shell thicknesses, and the maximum allowable pressures for the design thicknesses were greater than the design pressures. In all cases, pressure external to the cylinders was more limiting than internal pressure. For both vessels, a pressure external to the inner cylinder is produced by a positive pressure within the vessel.

c. Formed Heads

As indicated in Figure 1, the heads are annular composites of toroidal shell segments. This configuration is not explicitly addressed by Division 1. However, some aspects of the heads were treated similarly to more common formed heads, with some modifications.

TABLE 3. MINIMUM THICKNESSES AND MAXIMUM PRESSURES, CYLINDRICAL SHELLS, CENTRAL CALORIMETER

	Argon Vessel		Vacuum Vessel	
	Outer Cylinder	Inner Cylinder	Outer Cylinder	Inner Cylinder
Design Thickness, t_d, inch	.625	.4375	.625	.250
Design Pressure, P_d, psi (Int/Ext)	40/15	15/40[a]	15/15	15/15[a]
UG-27, Internal Pressure[b]				
t_{min} at P_d, inch	.318	.040	.126	.024
P_{max} at t_d, psi	78.4	144.5	74.4	100.5
UG-28, External Pressure				
t_{min} at P_d, inch	.380	.390	.400	.250
P_{max} at t_d, psi	37.0	51.9	35.1	16.1

Notes: (a) Internal/External pressures are reversed from outer cylinder due to annular shape of vessel.
(b) Joint Efficiency, E = 0.65.

Due to the complex shape of the heads, an analysis of stresses due to pressure loading was performed using numerical techniques described in Section B.3 of this report. The basis for using explicit analysis to qualify components is specified in Division 2, subject to the provisions of U-2(g) for a Division 1 vessel. Stress intensities were within the allowable stress intensities of Division 2, for primary membrane and bending stresses, and secondary bending stresses.

There are several issues of concern in determining the adequacy of the toroidal heads in addition to bursting strength.[7-11] These are the possibilities of elastic or plastic collapse of the outer knuckle ring under internal pressure, elastic or plastic collapse of the inner knuckle ring under external pressure, or elastic buckling of the toroidal crown due to external pressure.

An analytical model to predict elastic or plastic instability of the CC heads would be difficult to develop, and would be of limited value without test data for verification. Therefore, the elastic stress response

characteristics of the CC heads were correlated by comparison with stress analysis studies of torispherical heads reported in the literature[7]. The instability characteristics of the toroidal segments of the CC heads were then estimated by comparison to known buckling or collapse behavior of torispherical and other shells, as reported in the literature. The results of this comparison study are shown in Table 4.

TABLE 4. DESIGN COLLAPSE PRESSURES, CENTRAL CALORIMETER HEADS

Vessel	Shell Segment	Design Pressure, psi	Design Elastic Collapse Pressure, psi	Design Plastic Collapse Pressure, psi
Argon	Outer Knuckle	40	669[a]	56[b], 73[c]
(5/8 Inch	Inner Knuckle	15	37[a]	18[b], 16[c]
Thick Head)	Crown	15	15[d], 27[e]	--
Vacuum	Outer Knuckle	15	578[a]	56[b], 73[c]
(5/8 Inch	Inner Knuckle	15	73[a]	22[b], 18[c]
Thick Head	Crown	15	15[d], 27[e]	--

Notes: (a) Torispherical Heads, per Refs. 9 and 10; SF = 3
(b) Torispherical Heads, per Ref. 8; SF = 3
(c) Torispherical Heads, per Refs. 11 and 12; SF = 3
(d) Cylinder, per Ref. 14; SF = 2
(e) Spherical Cap, per Ref. 13; SF = 3

Design pressures indicated in Table 4 are the governing conditions for collapse of the individual shell segments. In all cases, the governing condition for the outer knuckle was internal pressure, while the governing condition, for the inner knuckle and crown was external pressure.
It was found that in the knuckle regions, the ratio of radius to thickness was such that the plastic-collapse mode was more critical than the elastic buckling mode. Elastic buckling was the critical mode in the crown regions.

Design collapse pressures indicated in Table 4 incorporate a Safety Factor defined as the ratio of critical collapse pressure to design collapse pressure. The Safety Factors inherent in the majority of reported design

collapse pressures is 3, except as noted. In those cases for which SF< 3, it is believed that the actual Safety Factors are greater than indicated due to the conservative buckling model used to calculate critical collapse pressures. Refer to the calculations (Appendix) for further information.

B.3. Primary and Secondary Stress Analysis

As has been noted, not all details of design and construction are explicitly covered by the Rules of Division 1. Article U-2(g) specifies that in such cases, details of design and construction be provided that are as safe as those of Division 1.(1) Toward this end, a detailed stress analysis was performed of the Central Calorimeter in accordance with the specifications of Division 2, Alternative Rules. The Division 2 procedure requires calculation of general and local primary membrane and bending stresses, secondary stresses and peak stresses. The stresses are categorized on the basis of location and the consequences of the stress exceeding yield. Allowable stresses are established accordingly, based on the Maximum Shear Stress Theory of failure.(6)

The stress analyses were performed using program NONLIN, which was developed at Battelle for the stress analysis of metallic bellows and diaphragms.(15) Program NONLIN performs direct numerical integration of the differential equations for nonlinear thin elastic shells of revolution. The theory assumes small strains but large rotations.

Stresses were combined manually from the NONLIN output to obtain stress intensities. The stress intensities were calculated, in accordance with Appendix A of Division 2, as the largest absolute value of the difference between principle stresses, $\sigma_1-\sigma_2$, $\sigma_2-\sigma_3$, or $\sigma_3-\sigma_1$.(2) The stress intensity is equal to twice the maximum shear stress. This calculation was performed separately for membrane and bending stresses, considering meridional and circumferential stresses as principal stress σ_1 and σ_2, respectively. The normal pressure (internal or external) was used for principal stress σ_3. The membrane and bending stress intensities were added and compared with the allowable stress intensities per Articles 4-130 and Table 4-120.1 of Division 2.

The calculated stresses are plotted in Figures 3 and 4 for the inner vessel of the Central Calorimeter. Calculated displacements normal to the

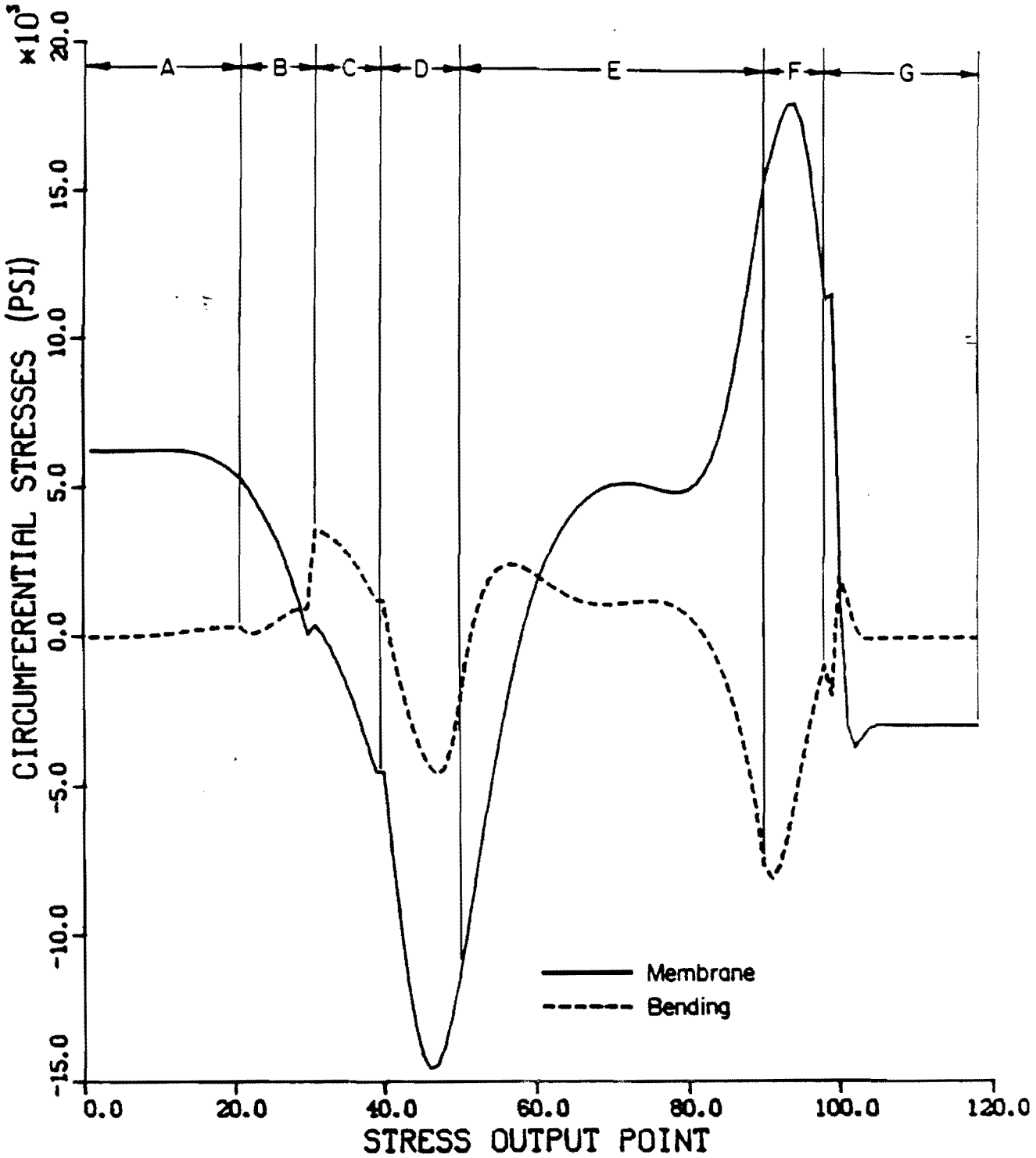

FIGURE 3. CIRCUMFERENTIAL STRESSES DUE TO INTERNAL PRESSURE
CENTRAL CALORIMETER INNER VESSEL

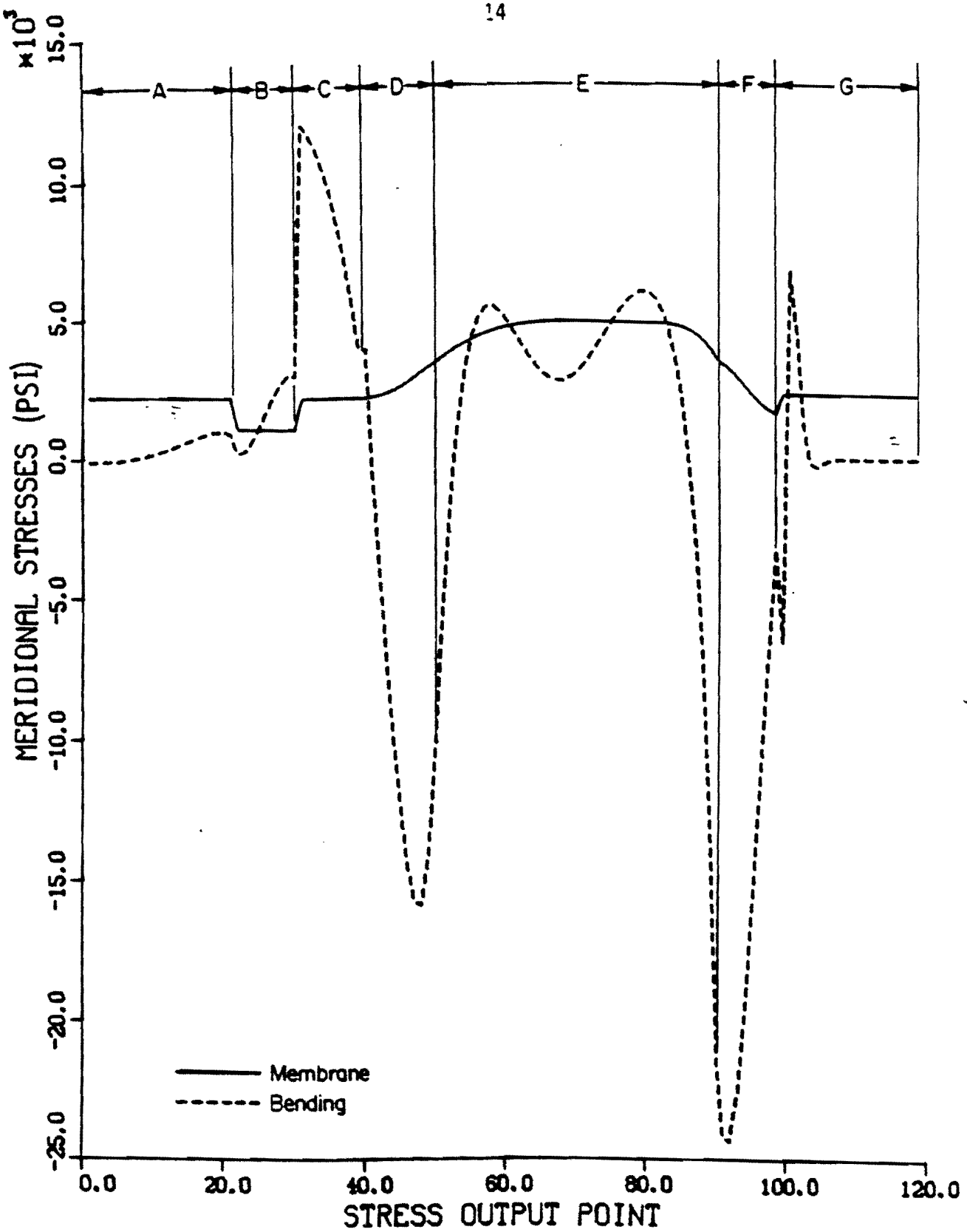

FIGURE 4. MERIDIONAL STRESSES DUE TO INTERNAL PRESSURE, CENTRAL CALORIMETER INNER VESSEL

shell surfaces are shown in Figure 5. Figure 6 schematically indicates the stress output regions identified in Figure 3 through 5. Stress and displacement distributions throughout the outer vessel are similar to those of the inner vessel but of lower magnitude.

The maximum stress intensities at various locations of the vessels are summarized in Table 5 for the configurations with stiffening rings. Calculated stress intensities were below allowables at all locations in both the inner and outer vessels. Refer to the calculations for further information.

B.4. Nonsymmetric Loading

The weight of the vessel and contained fluid apply a nonsymmetric load to the shells. An analysis was performed to show that the heads provide adequate stiffness to the cylindrical shells to resist the nonsymmetric load without the aid of external reinforcing rings. External reinforcing rings are not required for external pressure.

The maximum bending moments in the cylinder walls were calculated for the argon vessel weight, weight of the 5,000 gallons of liquid argon, and weight of the argon displaced by the vessel internals and annulus. These moments were calculated using the simple models shown in Figure 7, per Reference 16. The magnitude and location of the maximum moments depend on the circumferential locations of the supports. The support angles, dead weights, and calculated moments are shown in Table 6. The circumferential variation of the moments around the argon vessel are shown in Figure 8. The variation of moments around the vacuum vessel is similar to that of the argon vessel, but of lower magnitude.

The heads were considered to substantially stiffen the cylinders against the circumferential distribution of loads. This was determined based on the short lengths of the shells with respect to their diameter, the proximity of the support stanchions to the head-to-shell tangent points, and parameters developed in Reference 17.

The toroidal shell, stiffened by the heads, was treated as a thin-walled curved beam subject to the bending moments shown in Table 6. Calculated membrane stresses were less than 2,000 psi.

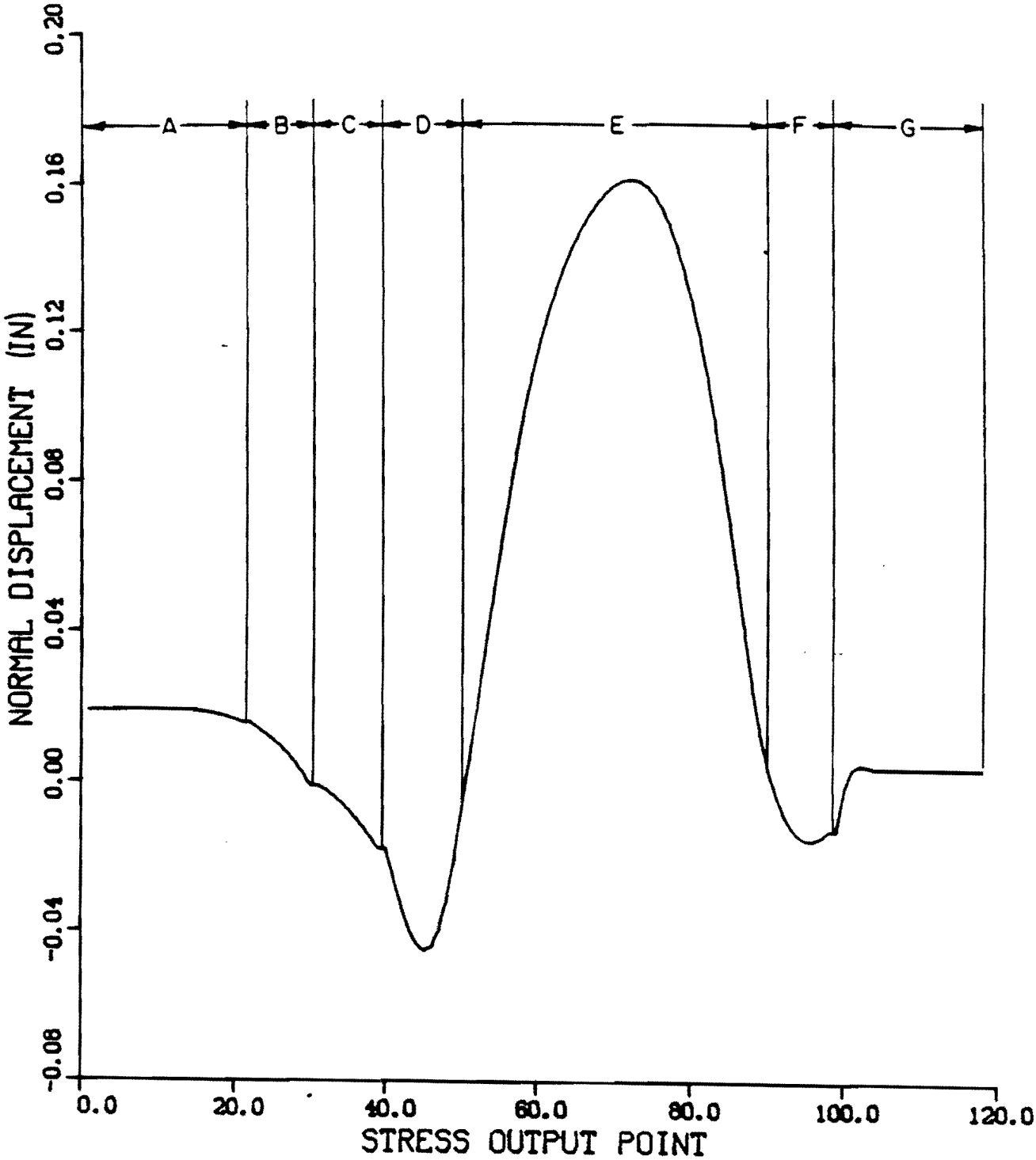

FIGURE 5. NORMAL SHELL DISPLACEMENTS DUE TO INTERNAL PRESSURE, CENTRAL CALORIMETER INNER VESSEL

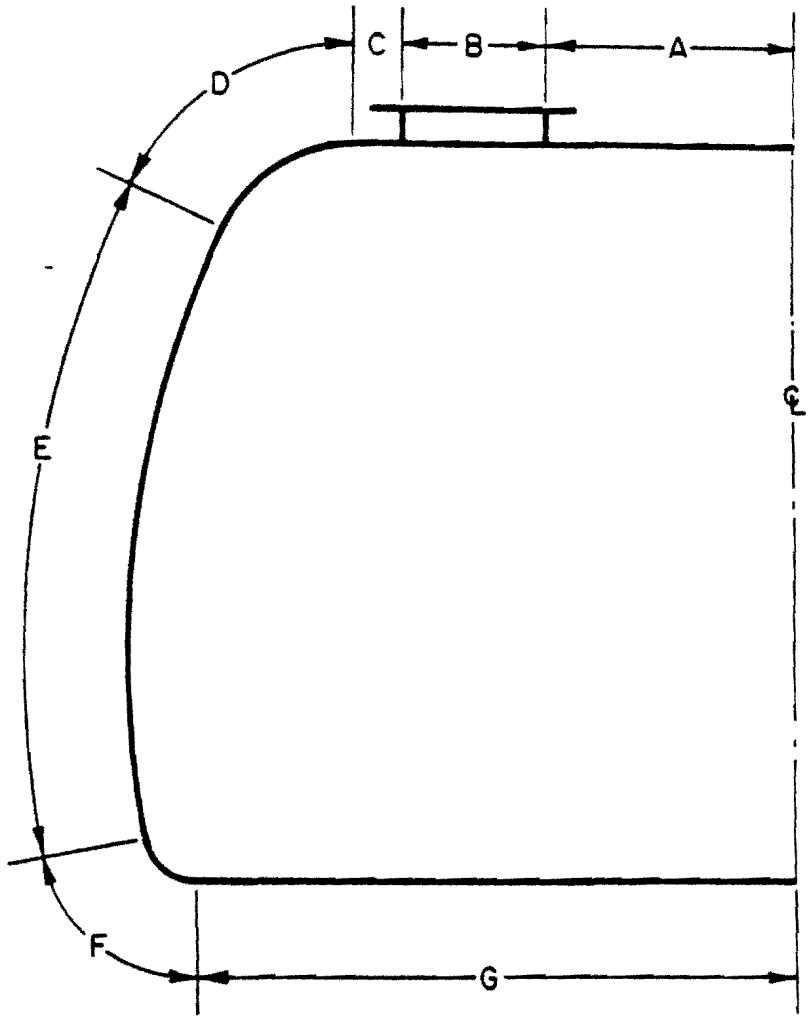

FIGURE 6. SCHEMATIC OF STRESS OUTPUT REGIONS IDENTIFIED IN FIGURES 3 THROUGH 5

TABLE 5. PRIMARY AND SECONDARY STRESS INTENSITIES (PSI) DUE TO INTERNAL PRESSURE, CENTRAL CALORIMETER

Segment	P_m(a)	P_b	$P_m + P_b$(b)	P_L(c)	Q	$P_L + Q$ (d,e)
I. Inner Vessel, P = 40 psi, Head Thickness = 5/8 Inch						
Outer Cylinder	5,598 -	1,044 -	6,642 -	- 5,126	- 7,059	- 12,185
Inner Cylinder	- 4,157	- 4,446	- 8,603	9,756	18,990	28,754
Outer Knuckle	-	-	-	17,753	14,485	32,238
Crown	- 5,193	- 5,754	- 10,947	14,680 -	17,278 -	31,957 -
Inner Knuckle	-	-	-	17,849	20,580	38,429
II. Outer Vessel, P = 15 psi, Head Thickness = 5/8 Inch						
Outer Cylinder	2,548 -	927 -	3,475 -	- 2,433	- 4,685	- 7,118
Outer Knuckle	-	-	-	6,649	5,425	12,074
Crown	5,498	6,471	11,969	-	-	-
Inner Knuckle	-	-	-	6,685	7,708	14,393
Inner Cylinder	3,774	2,115	5,889	-	-	-

Notes:
(a) Allowable $P_m = 1.0S_m = 20000$ psi.
(b) Allowable $P_m + P_b = 1.5\ S_m = 30,000$ psi.
(c) Allowable $P_L \leq 1.5S_m = 30000$ psi.
(d) Allowable $P_L + P_b + Q = 3.0\ S_m = 60,000$ psi.
(e) Includes P_m and P_b components.

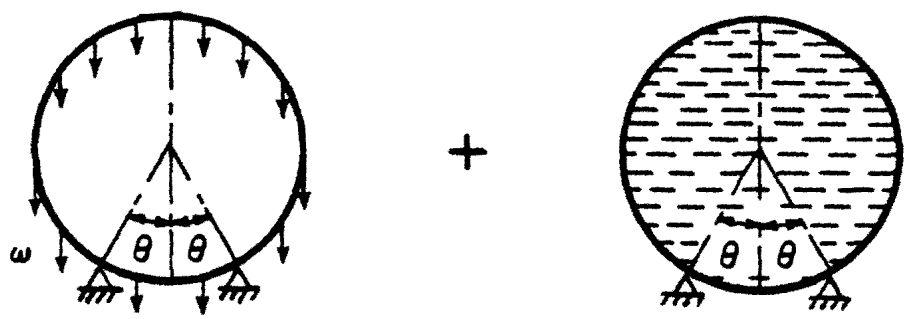

FIGURE 7. SIMPLIFIED MODELS FOR DEAD WEIGHT ANALYSIS

TABLE 6. DEADWEIGHT LOADING CENTRAL CALORIMETER

	Argon Vessel	Vacuum Vessel
Dry Vessel Weight, lb	24,000	25,000
Effective Liquid Weight, lb	2.96×10^6	0
Support Angle, degrees	50	46
Dry Weight Moment, in-lb	98,800	121,300
Liquid Weight Moment, in-lb	620,300	0
Total Moment, in-lb	719,100	121,300

Notes: Above numbers calculated by Fermilab, and are approximately 10 percent lower than values estimated by Battelle.

B.5. Reinforcing Rings

It was established that reinforcing rings were not required to resist the deadweight loads of the filled vessels, due to the stiffness provided by the heads. However, the heads will be removed from the vessels to access the interior space for installation and maintenance of the vessel internals. With the heads removed, reinforcing rings are required to support the empty shell dead weights. Ring designs provided by Fermilab were found to be adequate for this purpose. Ring cross-sections for the argon and vacuum vessels are shown in Figure 9. The applied moments in the rings with the heads removed, and the minimum ring section modulus for this load case are shown in Table 7. These rings also provide necessary reinforcement of the shell locally at the support stanchions, as discussed in Section B.8 of this report.

B.6. Piping

Six piping lines lie across the upper circumference of the argon vessel over a 130 degree arc. Three lines are 1½ inch NPS and three are 2 inch NPS; all are Schedule 40S stainless steel, assumed to be an 18Cr-8Ni TP304 with $S_y \geq 30$ ksi and $S_u \geq 75$ ksi. The lines contain liquid or gaseous nitrogen or argon, at an assumed pressure of 40 psi.

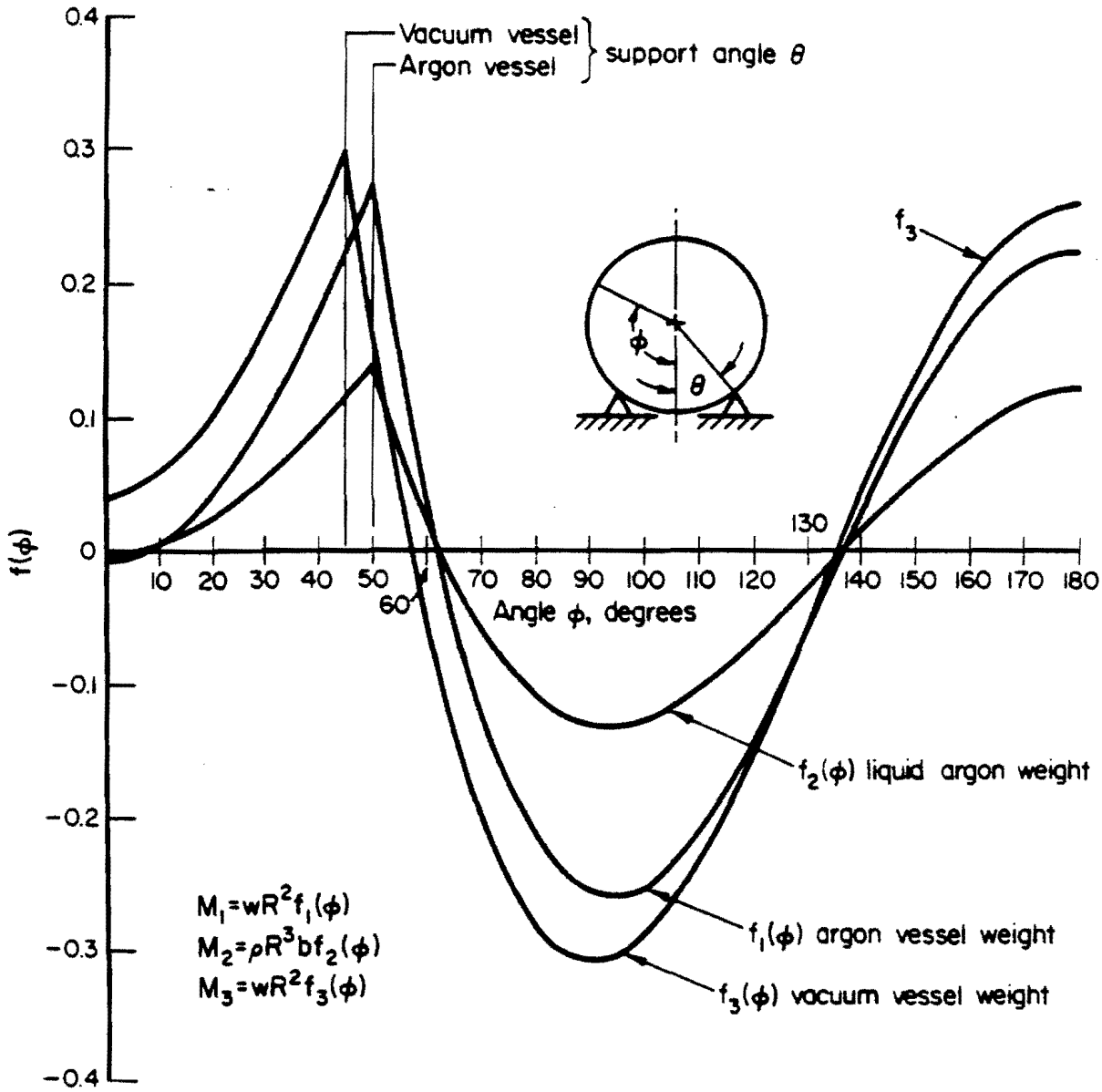

FIGURE 8. DISTRIBUTION OF RING MOMENTS DUE TO DEAD WEIGHT OF VESSEL AND CONTENTS

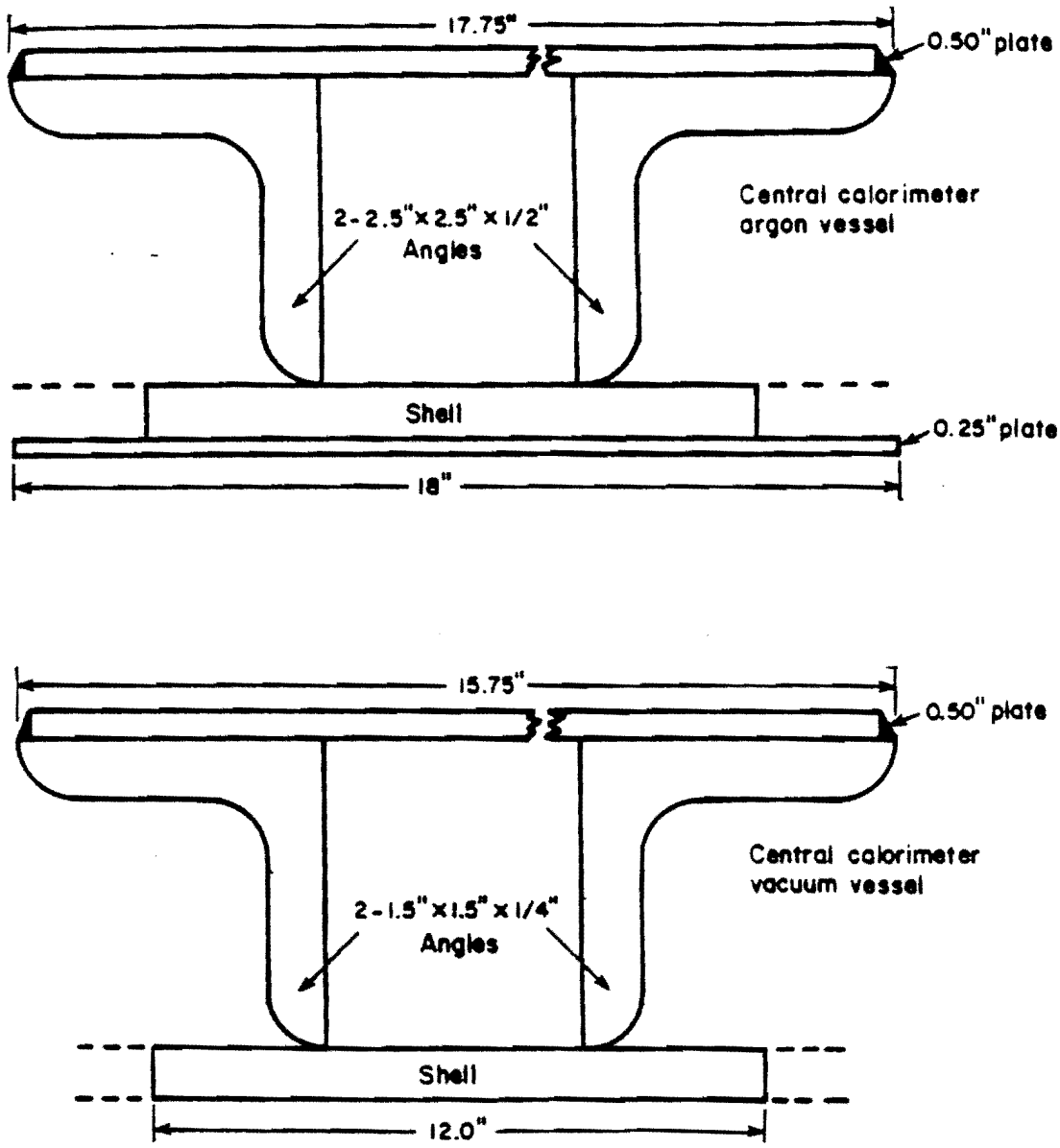

FIGURE 9. CENTRAL CALORIMETER REINFORCEMENT RING CROSS SECTIONS

B.7. Nozzles

The argon vessel is penetrated in several locations by 6-inch and 8-inch nozzles, primarily for the electrical connections to the vessel internals. The nozzles are Schedule 80S pipe (TP304 stainless steel assumed) with non-integral reinforcement pads. The reinforcement in the nozzle designs were found to meet the requirements of UG-37[1]. The generic nozzle configurations are listed in Table 10 and shown in Figure 11.

TABLE 10. REINFORCEMENT AREAS OF NOZZLES AND PENETRATIONS

Vessel	Nozzle	Type[a]	Pad	Angle of Penetration, degrees	Required[b] Area, in^2	Available[c] Area, in^2
Argon Vessel	6" S80S	2	½ x 2½	34	2.29	6.64
	8" S80S	3	½ x 3½	0	3.04	6.69
	8" S80S	2	3/4 x 3	48	3.04	8.66
	12" S40S[d]	1	3/4 x 2½	50	4.78	12.66
Vacuum Vessel	4" S80S	3	½ x 3/4	24, 30	0.75	2.76
	8" S80S	2	½ x 1½	32	1.49	5.68
	12" S80S	3	½ x 2	0	2.29	5.92
	12" S80S	2	½ x 2	45, 49	2.29	5.92
	12" S40S[d]	2	½ x 2	46	2.34	5.90

Notes:
(a) Refer to Figure 11.
(b) Area shown for E = 0.65, Longitudinal plane.
(c) Area shown for E = 0.65, Longitudinal plane, nozzle penetration on clear shell or weld joint Category B. Circumferential orientation, and penetration of other joint categories also acceptable.
(d) Support Stanchion.

The argon vessel is penetrated by 1½-inch and 2-inch nozzles associated with liquid and gaseous argon and nitrogen. Per Article UG-36, these penetrations are not required to be reinforced.[1]

The vessel supports penetrate the vessel with 12-inch Schedule 40S stanchions. The reinforcement by pads 3/4 inch thick and 2½ inches in width meets the requirements of UG-37[1].

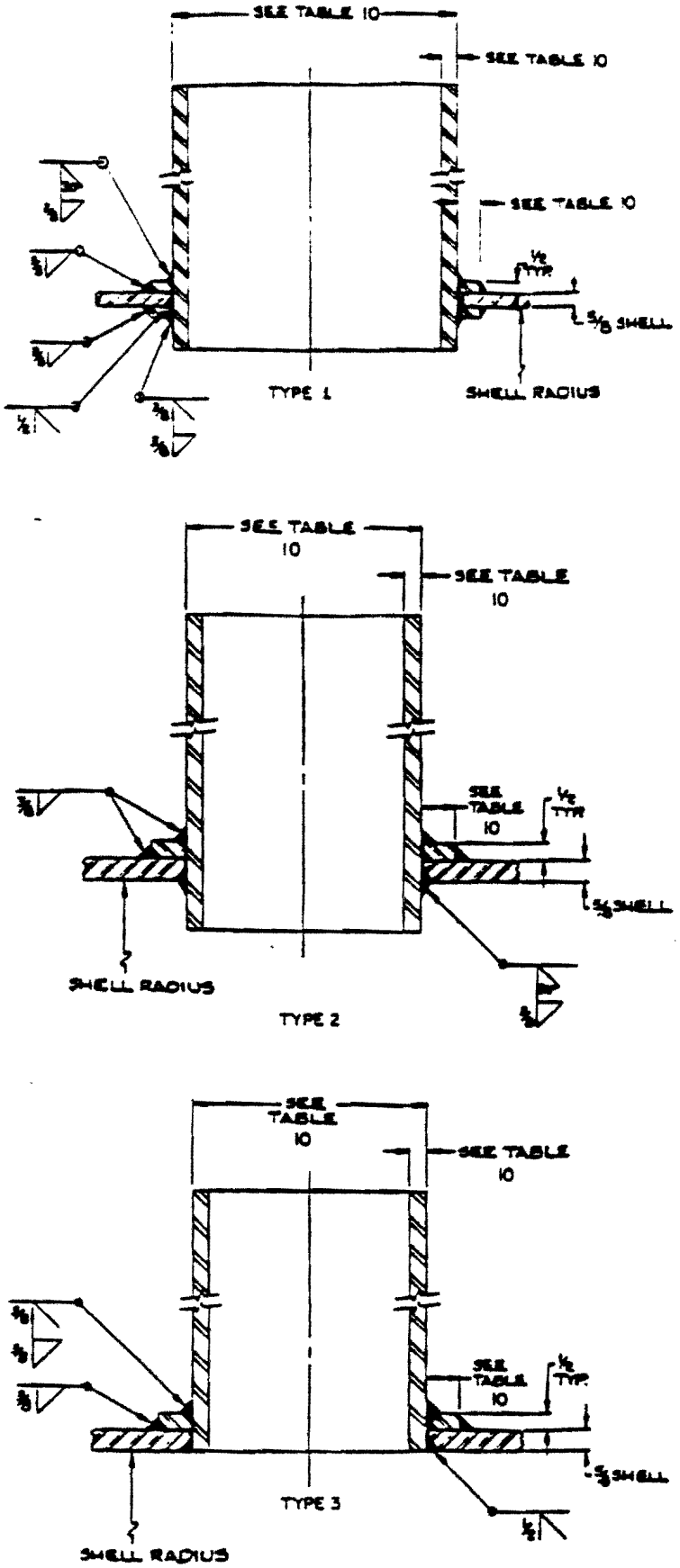

FIGURE 11. GENERIC NOZZLE CONFIGURATIONS

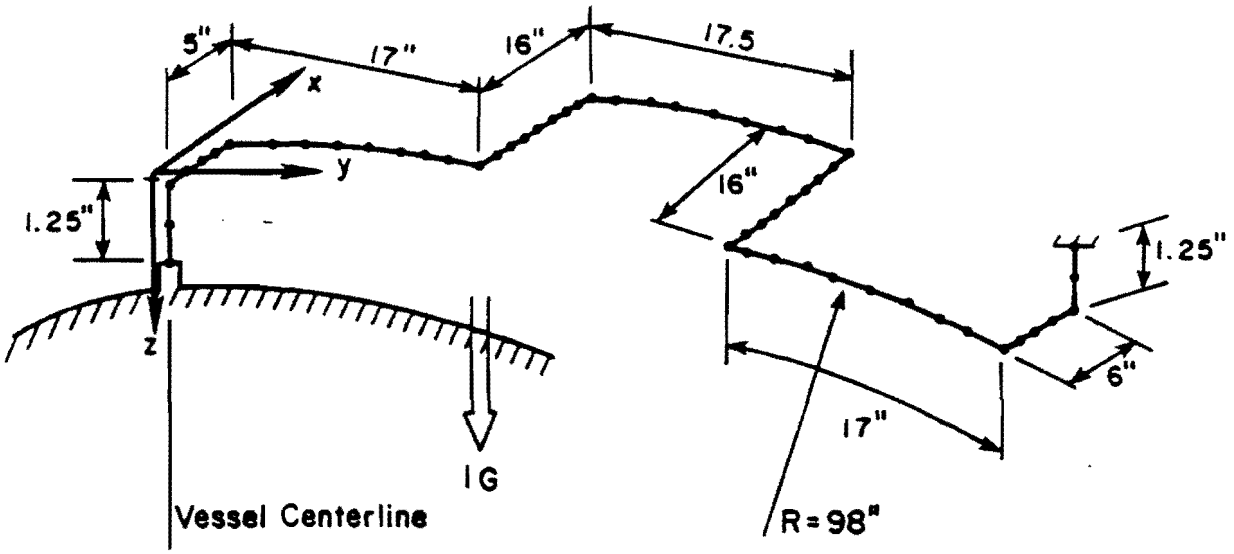

FIGURE 10. PIPE RUN "E", 2 INCH ARGON RELIEF LINE, SAVFEM MODEL

Due to the effects of curvature, the maximum moment from the SAVFEM analysis exceeded the maximum Chart Method moment by a factor of 1.5. This factor was applied to the maximum moment calculated by the Chart Method for the 1½-inch piping, to get a moment of 4,650 in-lbs. With a stress intensification factor i = 2.09 per NC-3673 the maximum stress was 27,800 psi, which was acceptable. Refer to the calculations for further details. If greater than 7,000 full temperature cycles are anticipated by the user, the stresses must meet a lower allowable, per NC-3611.2,(3) or a fatigue analysis per VIII-2, AD-160(2) should be performed.

Pressure stresses were calculated as Sp=PD/2t, per NC-3652.(3) The dead weight stresses were calculated for Pipe "E"-Argon Relief Line using the same finite element beam model as was used in the thermal stress analysis. The dead weight stress value for the 1½-inch NPS lines was estimated from the Pipe Run "E" results, with corrections for unit weight and section modulus. Pressure and dead weight stresses are shown in Table 9. Pressure and dead weight stress were added and compared to the allowable stress for static design loads of 1.5 S_h=28125 psi, per Article NC-3652, and found to be very low relative to the allowable.

TABLE 9. STATIC DESIGN LOAD STRESSES, PIPE "E", 2-INCH ARGON RELIEF LINE

	Total Pipe Weight, lb/in(a)	Section(b) Modulus, in^3	PD/2t(c)	MA/Z	S_{SL}	1.5 Sh
Pipe "E" 2 Inch NPS Sch. 40S	0.4742	.597	735	580	815	28,125
Equivalent 1½ Inch NPS Sch. 40S	0.3294	.351	265	685	950	28,125

Notes: (a) Pipe containing liquid Argon, Specific Gravity = 1.4.

(b) $Z = \pi r_m^2 t_n$.

(c) P = 40 psi.

(d) $M_A = [M_x^2 + M_y^2 + M_z^2]^{\frac{1}{2}}$

(e) S_{SL} = PD/2t + MA/Z.

TABLE 7. REINFORCEMENT RING BENDING MOMENTS WITH HEADS REMOVED, CENTRAL CALORIMETER

	Ring Description	Maximum Ring Moment, in-lb	Required[a] Section Modulus, in^3	As-Designed[a] Section Modulus, in^3
Argon Vessel	2L2½x2½x½ PL½x17-3/4	29,925	1.6	28.6
Vacuum Vessel	2L1½x1½x½ PL½x15-3/4	29,995	1.6	15.0

Notes: (a) Includes effect of shell width $\ell = 1.10\sqrt{Rt}$.

Section VIII Divisions 1 and 2 do not address piping systems except that if they are considered within the boundaries of the stamped vessel, the rules are to be applied to the piping as an extension of the vessel. If the boundaries are terminated at the first circumferential weld in the nozzle, the rules need not be applied to the piping. For purposes of this review, the vessel boundary was assumed to occur at the first nozzle weld. However, guidance in evaluating the piping was obtained from Section III, Nuclear Power Plant Components, Division 1, Subsection NC, Class 2 Components[3], which contains rules for the analysis and design of piping systems in Article NC-3600. Loads that were considered were pressure, deadweight and thermal expansion.

Thermal expansion stresses were calculated for a change in temperature from 70 F to -300 F, using the Chart Method[19]. The Chart Method was used to estimate thermal expansion stresses by hand, by approximating a complex piping run as a series of U- or Z-bend configurations, each of which is fixed at its ends. The method considers the flexibility of bends and other factors, but is generally considered conservative. Fermilab performed analyses of the expansion loops using this method. Battelle performed similar analyses of the expansion loops, and estimated maximum moments and nozzle loads. The results are found in Table 8. Stresses calculated for the expansion loops by Fermilab and Battelle were comparable to each other. From

NC-3611.2[3] the allowable thermal expansion stress range is $S_a = 0.25S_c + 1.25S_h = 1.5S_h = 28,125$ psi, for less than 7,000 full temperature cycles.

TABLE 8. THERMAL EXPANSION STRESSES, CALCULATED BY CHART METHOD

Pipe Run	NPS	Fermi Se, psi	Battelle Se, psi	Maximum Moment, in-lb	Maximum Force, lb
A	1½	14,195	11,850	2,414	172
B	1½	7,936	7,825	3,084	225
C	2	10,622	11,185	3,625	177
D	1½	16,314	14,495	2,953	240
E	2	15,402	13,870	5,197	535
F	1	13,275	13,105	4,248	465

The Chart Method calculations did not take into account the curvature of the piping around the vessel, which would result in additional bending and torsional moments. Therefore, a beam member finite element analysis was performed, using SAVFEM[18], to obtain more accurate stresses. Pipe Run "E", 2" Argon Relief Line, was selected for the detailed analysis based on its relatively high level of stress as estimated by hand. The model contained 53 nodes and 52 beam elements, and included the 98 inch radius of curvature of the piping around the vessel. The model is shown in Figure 10.

The maximum resultant moment was calculated as 7705 in-lb, in the expansion loop. NC-3653.2[3] requires use of a stress intensification factor, i, for various types of fittings. Per NC-3673, i = 2.27 for short radius bends.[3] With i = 2.27, the thermal expansion stress was 29,300 psi, which exceeded the allowable by only 4 percent. This was considered acceptable, as the analysis was inherently conservative by neglecting the flexibility in connected piping and at the shell. Reactions at the ends were calculated as 5,530 in-lbs and 660 pounds shear.

Table 10 shows required and available nozzle reinforcement areas, calculated in accordance with UG-36 through UG-41[1]. The calculations were performed considering a Joint Efficiency of 0.65. The available areas shown in Table 8 assumed the nozzles penetrated clear shell or weld joints of Category B only. The specified reduction in available reinforcement areas for penetration of other weld types did not result in disqualification of any nozzle designs. The results in Table 10 are for a cross-section in the vessel longitudinal plane. The nozzle reinforcements in all cases were also acceptable for cross-sections in the vessel circumferential plane. Refer to the calculations for further details.

B.8. Local Shell Stresses at Nozzles

The local stresses in the cylindrical shells were calculated using the method of Reference 20, which is an extension of the widely used Bijlaard analysis. Although the procedure is mechanical, it is based on thin shell theory and experimental work.

Membrane stresses were classified as local primary and bending stresses as secondary. Division 1 provides no guidance or criteria for evaluating local stresses. The Division 2 local primary and secondary stress allowables were used as acceptance criteria.

Thermal expansion and deadweight loads at the 2-inch nozzle of Pipe Run "E" are shown in Table 11. Local primary and secondary stresses in the shells due to the thermal expansion loads from the piping are also shown in Table 11. The piping dead weight loads were omitted from the Bijlaard analysis, but were judged to not increase stresses significantly. Table 11 shows that the combination of primary and secondary stresses in the shells due to pressure and thermal expansion of piping are well under the applicable allowable stresses. The local shell stresses due to loadings at the 1½-inch nozzles were not calculated, but were judged to be acceptable by comparison to the 2-inch nozzle.

Local stresses in the shell due to loads at nozzles 4 inches in diameter and larger were not evaluated. Based on information from Fermilab, thermal expansion and dead weight loadings at these nozzles were insignificant, since the nozzles serve as electrical cable ports.

TABLE 11. THERMAL EXPANSION AND DEADWEIGHT LOADS AND STRESSES, 2-INCH NOZZLES

Loads[a]		Stresses, psi[b]	
Deadweight	Thermal	Calculated	Allowable
$P = 25$ lb	50 lb	$P_m = 6{,}585$	$S_m = 20{,}000$
$V_C = 5$ lb	175 lb	$P_L = 480$	$1.5\ S_m = 30{,}000$
$V_L = 5$ lb	660 lb	$P_{m,L} + P_b = 11{,}300$	$1.5\ S_m = 30{,}000$
$M_T = 70$ in-lb	2,300 in-lb	$P_{m,L} + P_b + Q = 20{,}505$	$3.0\ S_m = 60{,}000$
$M_C = 25$ in-lb	5,530 in-lb		
$M_L = 20$ in-lb	1,645 in-lb		

Notes: (a) Refer to Figure 12 for load orientation.
(b) Calculated stresses for pressure and thermal expansion. Piping dead weight loads omitted.

The local stresses in the argon vessel shell at the support stanchions due to vessel deadweight were calculated, also by the Bijlaard method. When stresses were combined with primary pressure stresses, it was found that approximately 32 kips per stanchion in vessel weight was the maximum acceptable load without additional reinforcement locally. The reinforcement of the nozzle as specified by Articles UG-36 through UG-41[1] were required for membrane stresses due to pressure, and were not considered reinforcement for additional external loads. However, the external rings, designed to support the empty shell with the heads removed, stiffen the shell locally around the nozzle. The reinforcement provided by the rings are adequate to support a load of 185 kips at each stanchion. The allowable bending stress in the ring is 2/3Sy=20 ksi, per 13-4(b)(2)[1]. Using weights of 24 kips for the dry vessel and 147 kips for the liquid argon and displaced liquid argon volume, the maximum applied load is 43 kips per stanchion, which is less than the 185 kip capacity. The minimum ring section modulus in the vicinity of the stanchion required to support the 43 kip load at a stress of 20 ksi is 6.6 in^3. Refer to the calculations for further information.

The unreinforced load capability of the vacuum vessel is also 32 kips per stanchion. As this is greater than the total weight of the

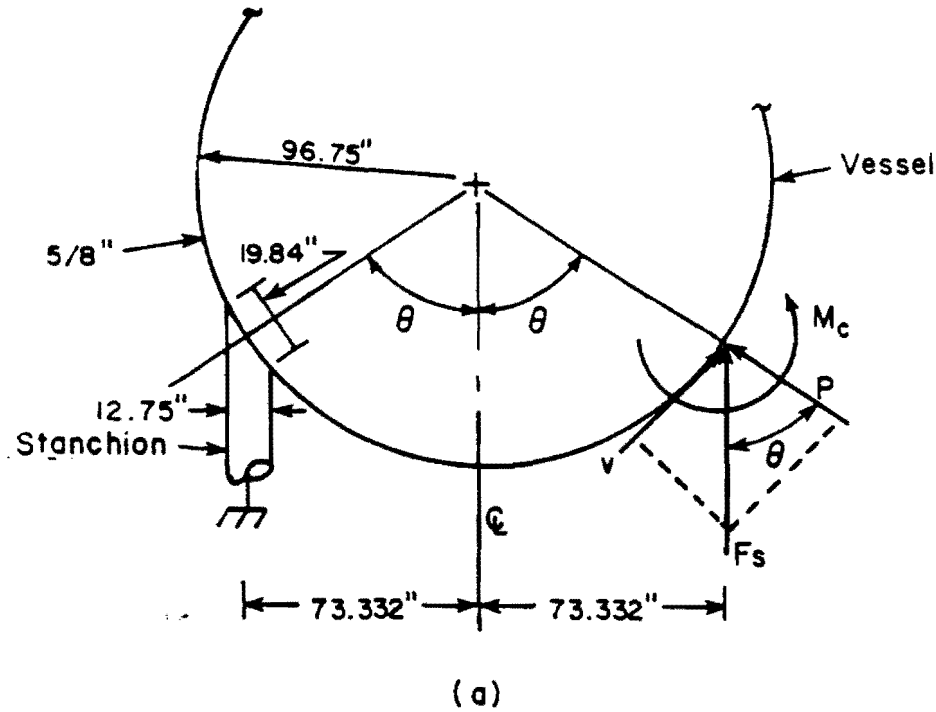

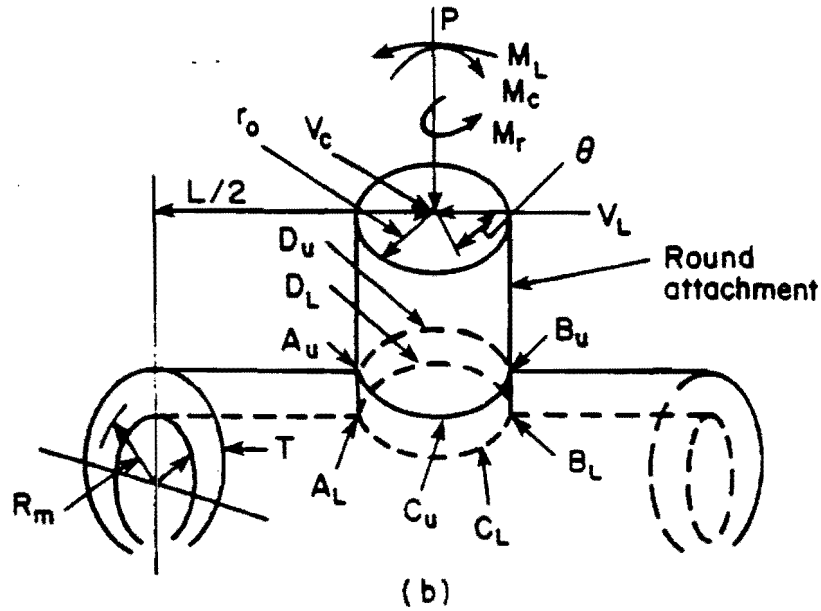

FIGURE 12. ORIENTATION OF LOCAL NOZZLE LOADS

vessel, the local reinforcement of the shell offered by the rings provides substantial additional strength.

C. ENDCAP CALORIMETER VESSELS

C.1. Description of the Endcap Calorimeter Vessels

a. Geometry

An endcap calorimeter is located at each end of the central calorimeter of the D-Zero cryostat. Each endcap calorimeter (EC) is comprised of two vessels, an inner vessel containing liquid argon and instrumentation modules, and an outer vessel containing a vacuum for insulation. The vessels are shown in Figure 13. Both EC assemblies are identical. Therefore, descriptions of the vessels and results of analyses provided herein apply equally to both EC assemblies.

Each vessel consists of a horizontal cylinder, with diameter approximately 3.3 times its length. The outside diameters are the same as the outside diameters of the corresponding vessels of the central calorimeter. The vessel closures facing toward the central calorimeter are defined as the front closures or heads. The front heads consists of two shell segments joined non-tangentially to each other and to the cylindrical shell. The inner segment is a spherical convex-outward shell with a 100 inch radius of curvature and outer diameter, typical of both the argon and vacuum vessels. Joining the convex shell to the cylinder, in each vessel, is an annular spherical concave shell segment with radius of curvature equal to the diameter of the cylindrical shell. Reinforcing rings are located at the joints between the cylinders and the concave shells, and between the concave and convex shells.

The vessel closures at the outside ends of the cryostat assembly are defined as the rear closures or heads. They consist of common torispherical shells, with 6 percent radius knuckles at the head-to-shell joints. The front and rear heads of the inner and outer shells contain central openings. Within each vessel a tube connects the front to rear heads along the vessel center-lines, at these openings. The openings thus pass through the lengths of the vessels.

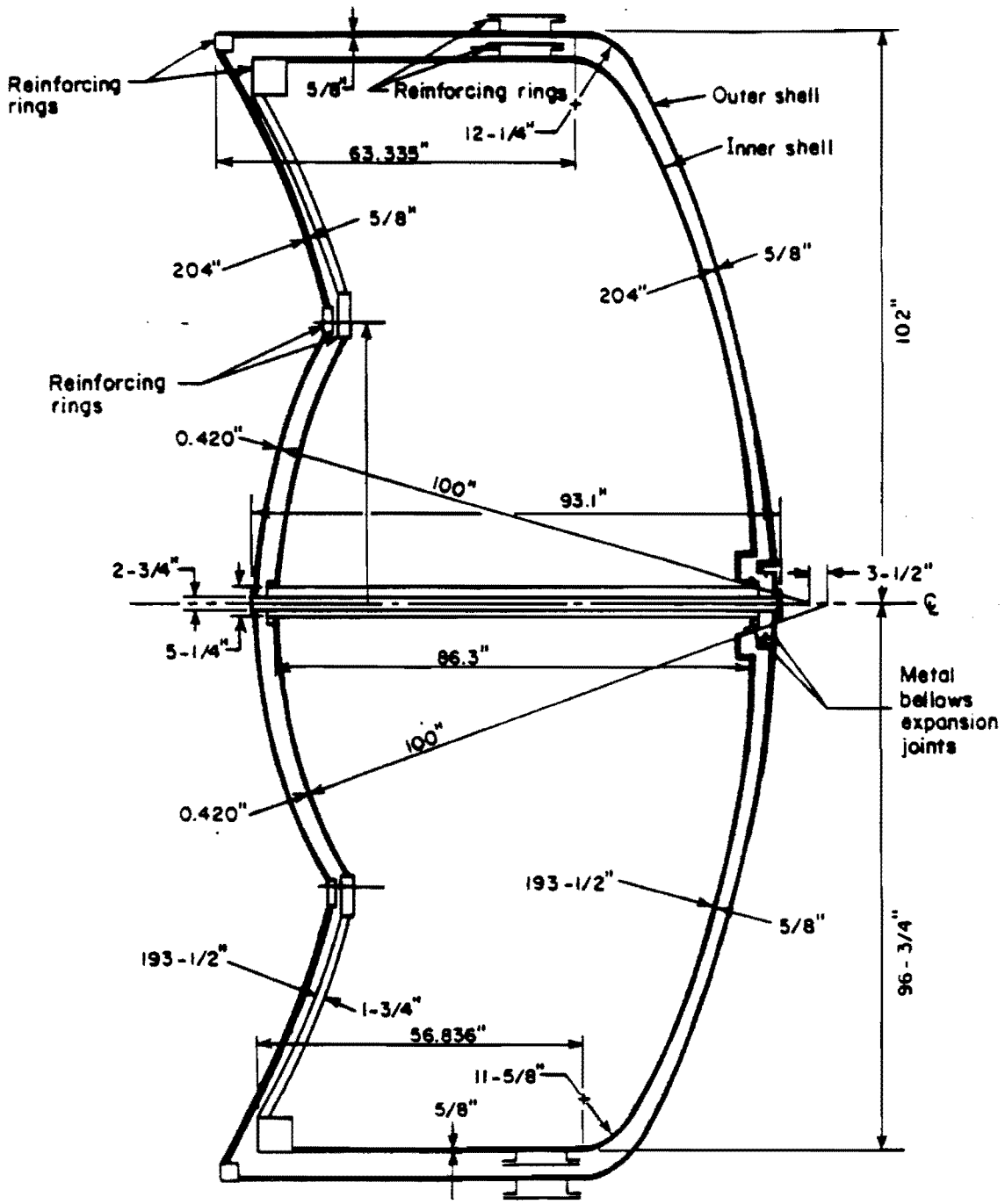

FIGURE 13. ENDCAP CALORIMETER VESSEL GEOMETRY

b. Vessels Contents

The contents of the inner and outer vessels of the endcap calorimeters are essentially identical to the contents of the corresponding vessels of the central calorimeter. The pressure and temperature conditions are also the same. Refer to Section B.1.b of this report for further details.

The volumes of the EC vessels differs from the corresponding CC vessels. The estimated weights of the EC vessels and their contents are shown in Table 12.

TABLE 12. ESTIMATED WEIGHTS, ENDCAP CALORIMETER

Item	Estimated Weight, kips
Inner Shell	25.9
Modules	433.8
5,000 Gal Liquid Argon	58.3
Total	518.0
Outer Shell	18.4

c. Materials of Construction

The EC vessels are to be constructed of the same 18Cr-8Ni high alloy stainless steel as the CC vessels. Refer to Section B.1.c and Table 2 of this report. The tubes located along the EC vessel centerline connecting the front and rear heads are to be constructed of seamless extruded aluminum, SB-214, Type 5083, or equivalent. Per References 1 and 2, material properties of the aluminum are as shown in Table 13.

d. Method of Support

The EC vessels are supported in a manner essentially identical to that of the CC vessels. Refer to Section B.1.d and Section D of this report.

TABLE 13. SPECIFIED MATERIAL PROPERTIES IN ACCORDANCE WITH ASME CODE, SECTION VIII, DIVISIONS 1 AND 2, SEAMLESS EXTRUDED ALUMINUM, SB-214, TYPE 5083

Specified Minimum Yield Strength, S_y	24.0 ksi
Specified Minimum Ultimate Strength, S_u	40.0 ksi
Division 1 Allowable Stress, S_a	10.0 ksi
Division 2 Design Stress Intensity, S_m	13.3 ksi
Modulus of Elasticity, E	10.3×10^3 ksi
Instantaneous Coefficient of Thermal Expansion, 70 F	12.90×10^{-6} in/in/F

e. Other Components

The scope of the review of the EC vessels is essentially identical to that of the CC vessel review. Refer to Section B.1.e of this report.

f. Loadings

Loadings that were considered in the review of the EC vessels were identical in scope to those of the CC vessel review. Refer to Section B.1.f of this report.

C.2. Minimum Shell Thicknesses and Maximum Pressures

a. Joint Efficiencies

The Code incorporates a Welded Joint Efficiency, E, in its strength calculations. The Joint Efficiency is essentially a level of confidence in the joint strength inspired by the degree of examination. Welded Joint Efficiencies for various degrees of examination and methods of construction are specified in Article UW-12[1]. A Joint Efficiency equal to 0.65 was considered in the subject analyses, corresponding to single-welded butt

secondary stress intensity evaluation according to Division 2 criteria. The NONLIN analyses and results are described in a subsequent section of this report. Reference to the calculations should be made for more detailed information.

The 100-inch spheroidal convex shell segment located at the center of the front heads is common to both the inner and outer vessels. The segment was evaluated using the Code equations for spherical shells, per Articles UG-27 and UG-28[1], and for hemispherical heads per Articles UG-32 and UG-33[1]. The calculations for either configuration are identical. The minimum required thicknesses for the design pressures were less than the design thicknesses, and maximum allowable pressures for the design thickness were greater than the design pressures. These are summarized in Table 15.

TABLE 15. MINIMUM THICKNESSES AND MAXIMUM PRESSURE SPHEROIDAL CAPS, FRONT HEADS, ENDCAP CALORIMETERS

	Inner Vessel	Outer Vessel
Design Thickness, t_d inch	.420	.420
Design Pressure, P_d, psi (Int/Ext)	40/15	15/15
UG-27/32, Internal Pressure[a]		
t_{min} at P_d, inch	.164	.062
P_{max} at t_d, psi	102	102
UG-28/33, External Pressure		
t_{min} at P_d, inch	.300	.300
P_{max} at t_d, psi	28	28
Design Collapse Pressure, psi[b]	30	30

Notes: (a) Joint Efficiency, E = 0.65.
(b) Based on experimental lower bound, per Ref. 13, with S.F. = 4.0.

The elastic collapse pressure was calculated, treating the shell segment as a shallow spherical cap. The calculated critical pressure was based on a lower bound of test data.[13] The calculated value was in essential agreement with the Code external pressure calculations, taking into account an inherent Safety Factor of 4 in the Code values.

The annular spheroidal concave shell segments which complete the front heads are relatively shallow, typically subtending approximate meridional angles from 15 to 30 degrees from the vessel centerline. Due to their shallowness and short meridional arcs, they approach shallow conical shell segments in geometry and behavior. The required thicknesses and maximum pressures were calculated by Code formulas for both spherical and conical shells, and were found to be acceptable. These results are shown in Table 16. Theoretical or experimental elastic collapse pressures for shallow spheroidal segments were not found in available references. However, theoretical and experimental results did exist for conical segments. The subject shells were evaluated accordingly with results as shown in Table 16. For both vessels, a pressure external to the concave shell is produced by a positive pressure within the vessel, due to the reentrant configuration of the shell segments. Experimental data[22] indicated that the ASME Code design equations possess minimum Safety Factors that range from 2.4 to 4.9. The allowable pressure in the inner vessel exceeds the applied pressure regardless of the method used to calculate the value. The allowable pressure in the outer vessel is less than the design pressure of 15 psi. However, taking into account minimum safety factors typical of the Code, and the fact that the vessel is not operated with an internal pressure, the shell segment may be considered acceptable for its intended function.

Conical shells that intersect with cylindrical or other shell types experience large discontinuity stresses at the intersections.[21] Reinforcement rings at the shell joints are required to stabilize the local compressive stresses that occur at those locations and to transfer loads between shells.

e. Aluminum Centerline Tubes

A seamless extruded aluminum tube is located along the centerline of each EC vessel, connecting the front and rear heads. The tube effectively creates a circular opening clear through the vessel. The tube of the outer vessel therefore runs concentric with and inside the tube of the inner vessel (see Figure 13). Metal bellows expansion joints are fitted to the nozzles at the rear heads, eliminating axial loading on the tubes and local normal loads on the shells.

TABLE 16. MINIMUM THICKNESSES AND MAXIMUM PRESSURE CONCAVE SHELL SEGMENTS, FRONT HEADS, ENDCAP CALORIMETERS

		Inner Vessel	Outer Vessel
Design Thickness, t_d inches		1.760	.625
Design Pressure, P_d, psi (Int/Ext)[a]		15/40	15/15
UG-27/32, Internal Pressure[b]			
t_{min} at P_d	Spherical	.119	.126
	Conical	.156	.167
P_{max} at t_d	Spherical	218	74
	Conical	167	56
UG-33, External Pressure			
t_{min} at P_d	Spherical	1.05	.600
	Conical	1.25	.850
P_{max} at t_d	Spherical	83.4	16.3
	Conical	60.5	8.0
Conical Design Collapse Pressure, psi		169[c,e]	20[c,e]
		102[d,e]	15[d,f]

Note: (a) Due to reentrant configuration, external and internal pressures are reversed.
(b) Joint Efficiency, E = 0.65.
(c) Calculated according to Refs. 21 and 22.
(d) Calculated according to Ref. 14.
(e) Minimum Safety Factor = 4.0.
(f) Minimum Safety Factor = 2.4.

TABLE 17. MINIMUM THICKNESSES AND MAXIMUM PRESSURE ALUMINUM CENTERLINE TUBES, ENDCAP CALORIMETERS

	Inner Vessel	Outer Vessel
Design Thickness, t_d inch	.125	.125
Design Pressure, P_d, psi (Int/Ext)[a]	15/40	15/15
UG-27, Internal Pressure[b]		
t_{min} at P_d, inch	.004	.002
P_{max} at t_d, psi	463	862
UG-28, External Pressure		
t_{min} at P_d, inch	.095	.048
P_{max} at t_d, psi	103	382

Note: (a) Due to reentrant configuration, external and internal pressures are reversed.
(b) Joint Efficiency, E = 0.65.
are reversed.

The tubes were found to comply with Articles UG-27, -28, and -31 of the Code, although they can also be considered outside the boundaries of the vessels. Minimum thicknesses and maximum pressures are shown in Table 17. The preliminary nozzle design consisted of aluminum and stainless steel flanges roll-bonded to form a single flange. The aluminum tube is then welded to the aluminum half of the flange, and the stainless steel half of the flange is welded to the shell. This nozzle design was not checked for compliance to any design rules, due to the preliminary nature of the design.

C.3. Primary and Secondary Stress Analysis

As has been noted, not all details of design and construction were explicitly covered by the Rules of Division 1. Article U-2(g) specifies that in such cases, details of design and construction be provided that are as safe as those of Division 1.[1] Toward this end, a detailed stress analysis was performed of the endcap calorimeter in accordance with the specifications of

Division 2, Alternative Rules. The Division 2 procedure requires calculation of general and local primary membrane and bending stresses, secondary stresses, and peak stresses. The stresses are categorized on the basis of location and the consequences of the stress exceeding yield. Allowable stresses are established accordingly, based on the Maximum Shear Stress Theory of failure.(6)

The stress analyses were performed using program NONLIN, which was developed at Battelle for the stress analysis of metallic bellows and diaphragms.(15) Program NONLIN performs direct numerical integration of the differential equations for nonlinear thin elastic shells of revolution. The theory assumes small strains but large rotations.

Stresses were combined manually from the NONLIN output to obtain stress intensities. The stress intensities were calculated, in accordance with Appendix A of Division 2, as the largest absolute value of the difference between principle stresses, $\sigma_1-\sigma_2$, $\sigma_2-\sigma_3$, or $\sigma_3-\sigma_1$.(2) The stress intensity is equal to twice the maximum shear stress. This calculation was performed separately for membrane and bending stresses, using meridional and circumferential stresses as principal stresses σ_1 and σ_2, respectively. The normal pressure (internal or external) was used for principal stress σ_3. The membrane and bending stress intensities were added and compared with the allowable stress intensities per Articles 4-130 and Table 4-120.1 of Division 2.

The calculated stresses are plotted in Figures 14 and 15 for the inner vessel of Endcap Calorimeter. Figure 16 schematically indicates the stress output regions identified in Figures 14 and 15. Stress and displacement distributions throughout the outer vessel are similar in nature to those of the inner vessel, but are of lower magnitude.

The maximum stress intensities at various locations of the vessel are summarized in Table 18 for the configuration with stiffening rings. Calculated stress intensities were below allowables at all locations in both the inner and outer vessels. Refer to the calculations for further information.

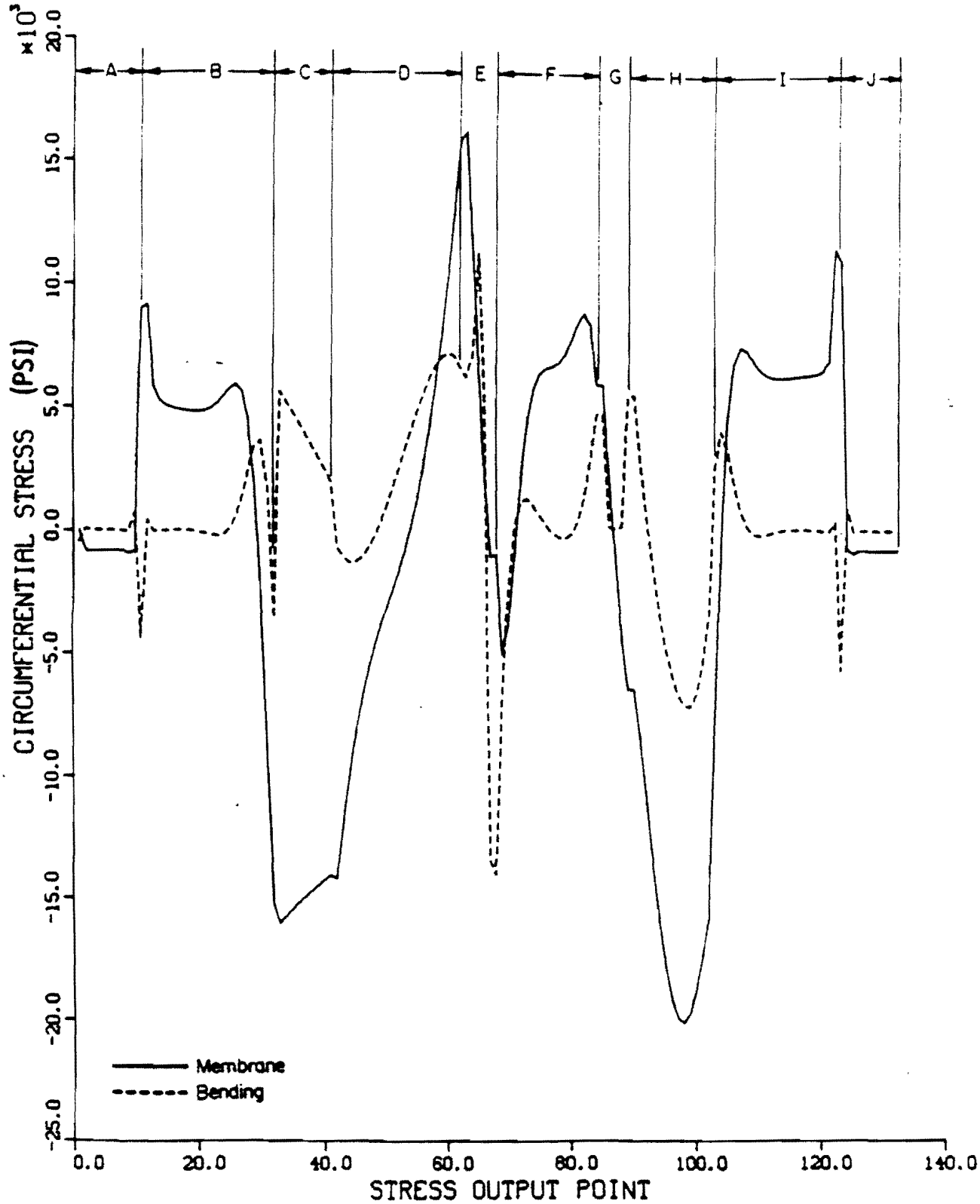

FIGURE 14. CIRCUMFERENTIAL STRESSES DUE TO INTERNAL PRESSURE, ENDCAP CALORIMETER INNER VESSEL

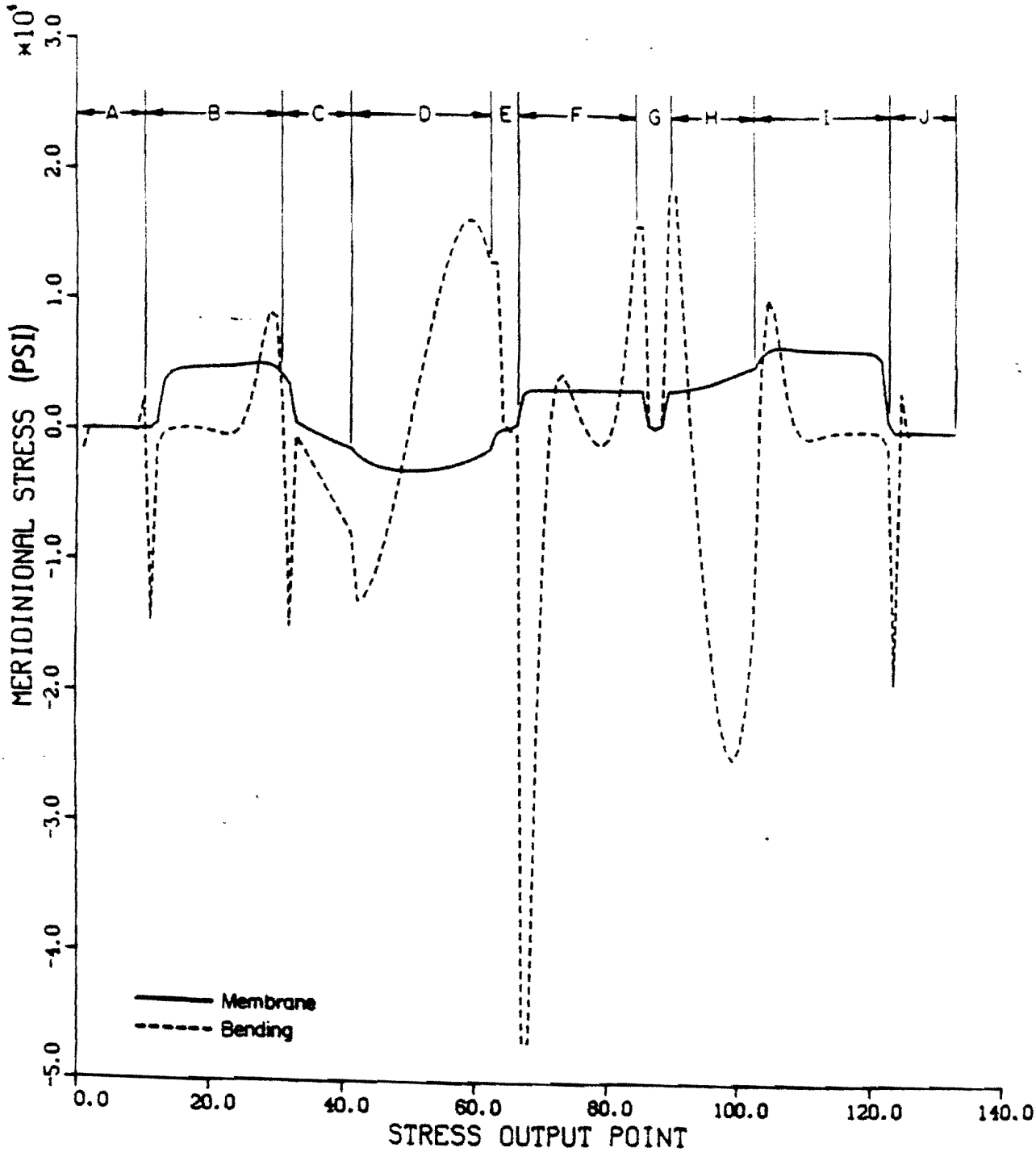

FIGURE 15. MERIDIONAL STRESSES DUE TO INTERNAL PRESSURE, ENDCAP CALORIMETER INNER VESSEL

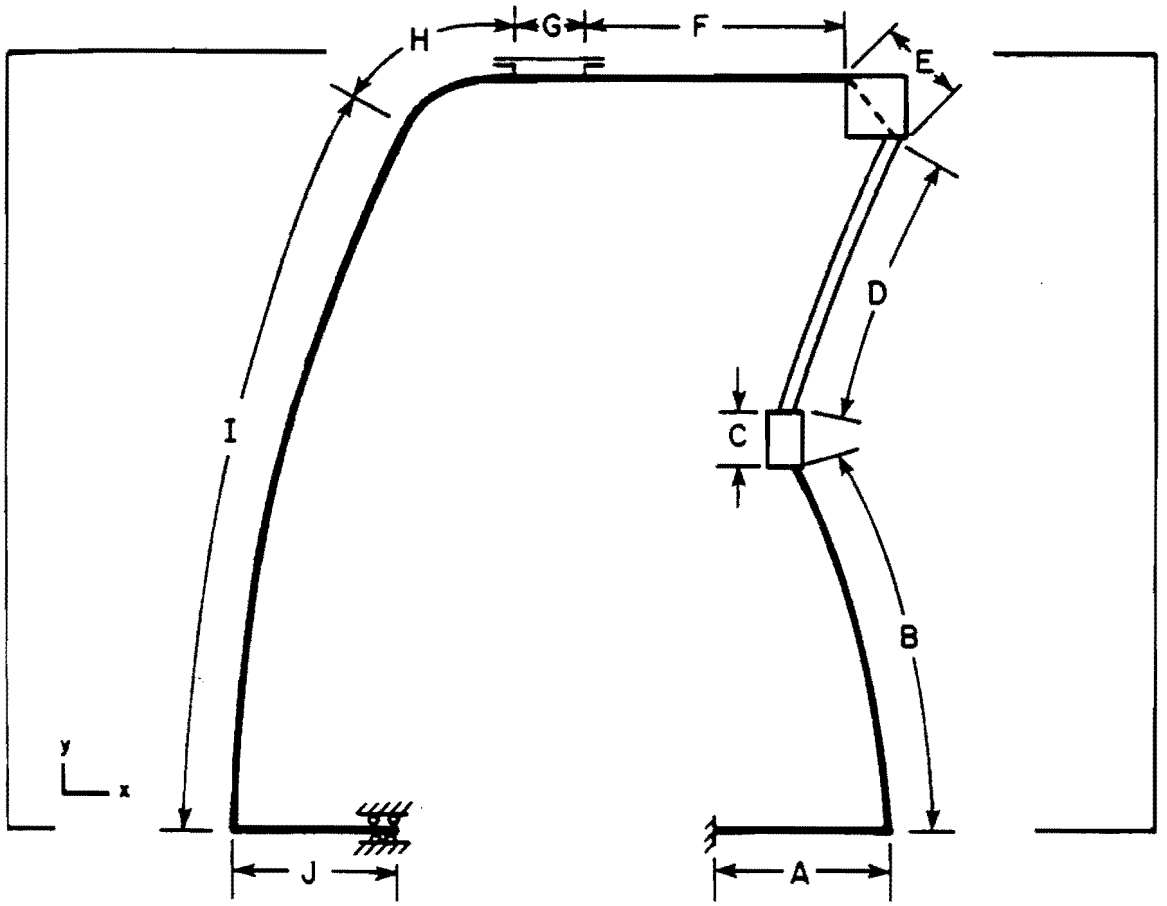

FIGURE 16. SCHEMATIC OF STRESS OUTPUT REGIONS IDENTIFIED IN FIGURES 14 AND 15

TABLE 18. PRIMARY AND SECONDARY STRESS INTENSITIES (PSI) DUE TO INTERNAL PRESSURE, ENDCAP CALORIMETER

Segment	P_m(a)	P_b	$P_m + P_b$(b)	P_L(c)	Q	$P_L + Q$(d,e)
Centerline	794	2,388	3,182	-	-	-
Tube	-	-	-	9,056	14,723	23,739
Convex	-	-	-	5,164	8,909	14,073
Spherical Cap	4,921	8,286	13,207	-	-	-
	-	-	-	18,562	15,198	33,760
Concave Spherical	-	-	-	14,178	13,126	27,304
Annulus	5,990	13,854	19,844	-	-	-
	-	-	-	17,293	12,708	30,001
Cylinder	-	-	-	4,071	46,886	50,957
	6,605	6,757	13,362	-	-	-
	-	-	-	5,916	15,596	21,512
Torisphere	-	-	-	24,020	25,026	49,046
Knuckle	-	-	-	-	-	-
Torisphere	6,377	37	6,414	-	-	-
	-	-	-	11,541	1,354	12,895

Notes: (a) Allowable $P_m = 1.0S_m = 20000$ psi.
(b) Allowable $P_m + P_b = 1.5\ S_m = 30,000$ psi.
(c) Allowable $P_L = 1.5S_m = 30000$ psi.
(d) Allowable $P_L + P_b + Q = 3.0\ S_m = 60,000$ psi.
(e) Includes P_m and P_b components.

C.4. Nonsymmetric Loading

The weight of the vessels and contained fluid apply a nonsymmetric load to the shells. Correlation of deterministic parameters with data from Reference 17 indicates that the heads substantially stiffen the cylindrical shells against gross nonsymmetric loading.

The front and rear head shell segments of the inner vessel were evaluated for the combined weights of shells plus fluid using the simple handbook models shown in Figure 17, per Reference 14. The rear torispherical heads were treated as spherical segments. The concave annular shell segments were evaluated both as a spherical and as a conical shell segment. The calculated membrane stresses were combined with the pressure stresses and were determined to be acceptable. Results are shown in Table 19. The analysis showed that the heads provide adequate stiffness to support the vessels without stiffening rings. Reinforcing rings are required to stabilize the front head shell segments under compressive stresses, as discussed in Section C.5 of this report.

TABLE 19. NONSYMMETRIC LOADING, ENDCAP CALORIMETERS, STRESSES, PSI

	Empty Shell	Fluid	Shell Plus Fluid
Inner Vessel			
Rear Head	195	2,490	2,685
Front Head	70	850	920
Outer Vessel			
Read Head	195	N.A.	N.A.
Front Head	200	N.A.	N.A.

C.5. Reinforcement Rings

Large discontinuity stresses exist at the joints between shell segments of the front heads. The stresses may be compressive in either the meridional or circumferential direction, depending on pressure and geometry. Reinforcement rings at the joints are required to stabilize the shells under compression, and to transfer load between shells.

As noted in Section C.2.d, the concave annular shell segments were approximated as conical segments. The Code rules for determining reinforcement requirements of conical segments are based on a simplified discontinuity

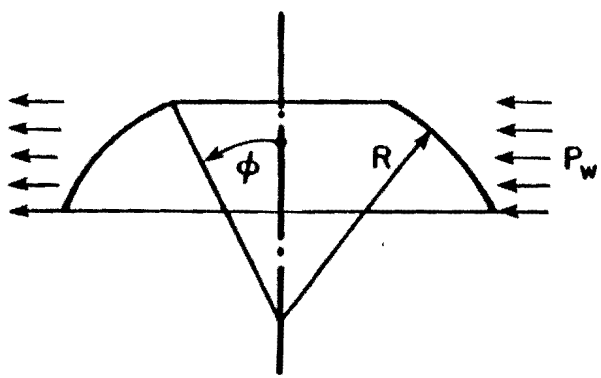

Spherical Segment

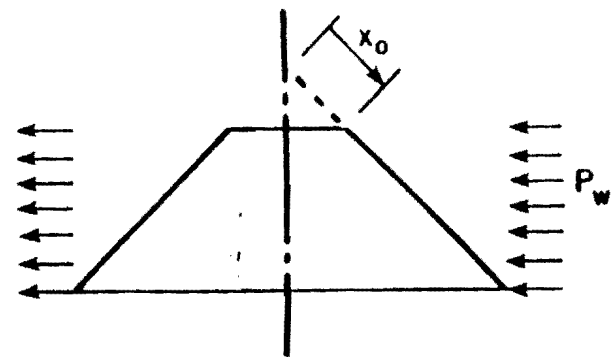

Conical Segment

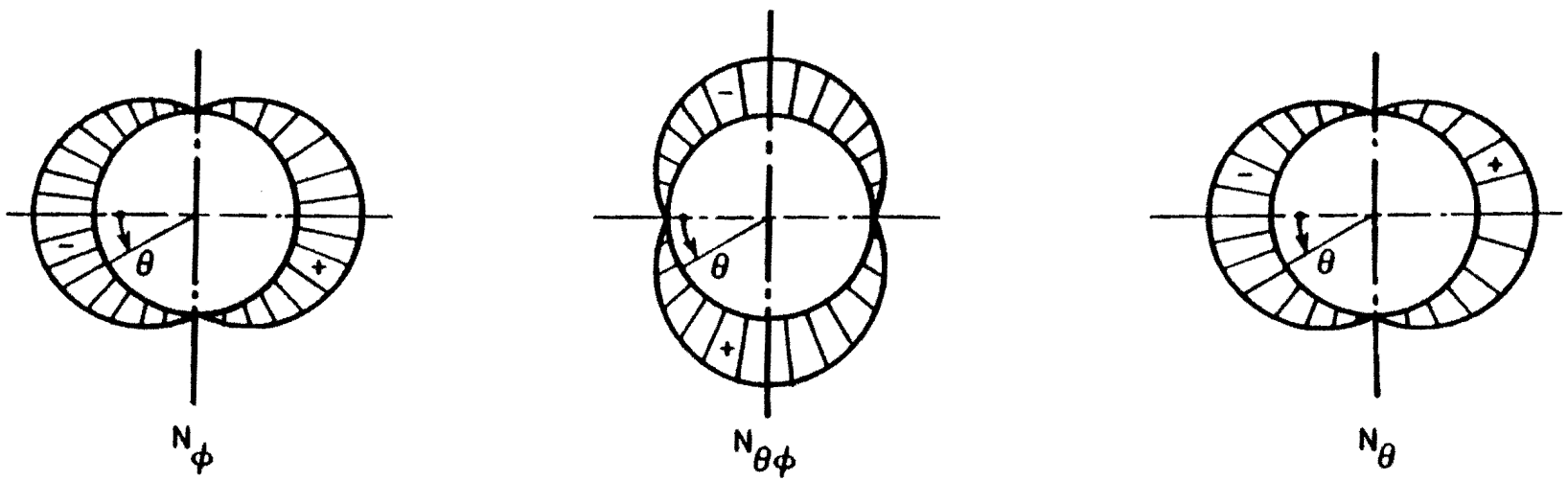

Stress Resultants in Circumferential Direction

FIGURE 17. SIMPLIFIED MODELS FOR DEAD WEIGHT ANALYSIS, ENDCAP CALORIMETER

analysis. The rules for reinforcement of conical segments under internal pressure are contained in Appendix 1-5[1], and the rules for external pressure are in Appendix 1-8[1]. The rules specify that half the cone angle must be less than 60 degrees. However, by eliminating simplifications inherent in the Code formulas, based on References 21 and 22, the rules can be considered analytically valid in the cone angle range of interest, up to 75 degrees. Refer to the calculations for further details.

Reinforcing ring minimum cross-sectional areas and moments of inertia are shown in Table 20. Ring 1 is located at the joint between the cylinder and the concave annulus. Ring 2 is located at the joint between the concave annulus and the spherical cap. All ring properties were calculated for a Joint Efficiency of 0.65.

TABLE 20. REINFORCEMENT RING MINIMUM SECTION PROPERTIES, FRONT HEADS, ENDCAP CALORIMETERS

Vessel	Ring[a]	Minimum Area, in^2	Minimum[b] Inertia, in^2	Maximum[c] C, in^2
Inner	1	16.5	8.2	3.8
	2	18.3	14.6	2.3
Outer	1	17.7	33.3	4.0
	2	5.8	5.7	2.3

Notes: (a) Ring 1 is located at the joint between the cylinder and the concave annulus. Ring 2 is located at the joint between the concave annulus and the spherical cap.

(b) Moment of inertia is calculated about an axis parallel to the cylinder wall, located at the centroid of the ring cross-section.

(c) Dimension "c" is the maximum meridional distance from the joint within which the ring centroid must be located.

Reinforcement rings are also attached to the cylindrical shells near the rear head-to-shell joints. Ring cross-sections for the inner and outer vessels are shown in Figure 18. These rings are required to support the

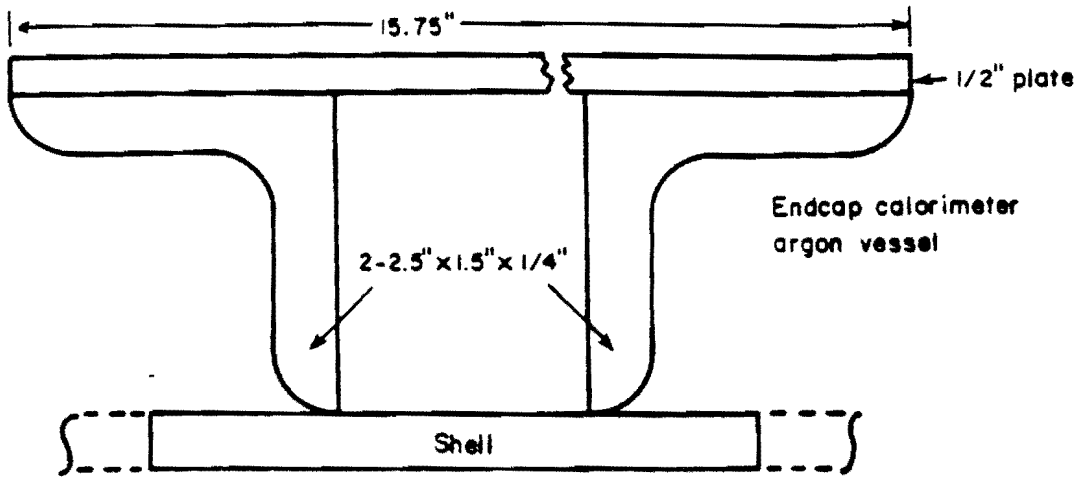

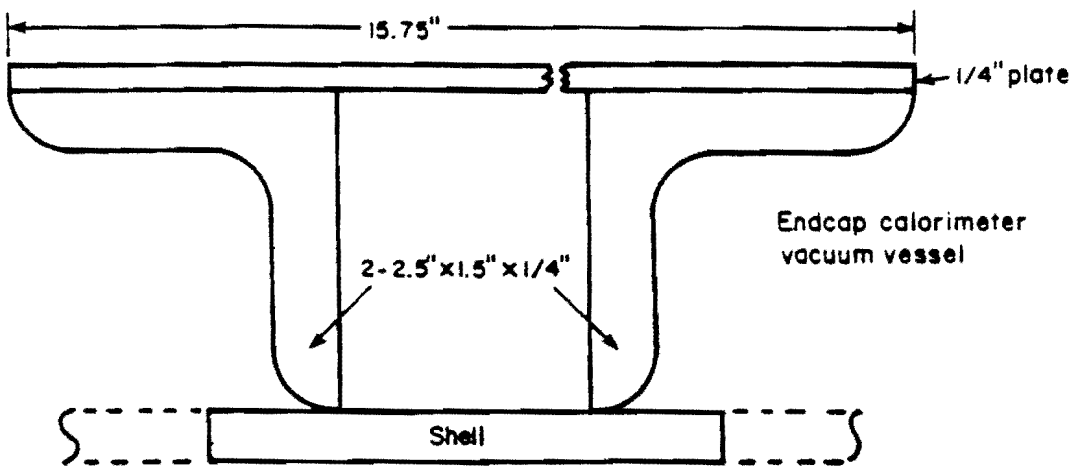

FIGURE 18. ENDCAP CALORIMETER REAR REINFORCEMENT RING CROSS SECTIONS

cylindrical shells with the rear heads removed. The applied moments in the rings with the heads removed and the minimum ring section modulus for this load case are shown in Table 21. These rings also provide necessary reinforcement of the shell locally at the rear support stanchions, as discussed in Section C.8 of this report.

TABLE 21. REINFORCEMENT RING BENDING MOMENTS WITH HEADS REMOVED, ENDCAP CALORIMETER

	Ring Description	Maximum Ring Moment, in-lb	Required[a] Section Modulus, in^3	As-Designed[a] Section Modulus, in^3
Argon Vessel	2L1½x1½x¼ PL½x15-3/4	29,925	1.6	15.1
Vacuum Vessel	2L1½x1½x¼ PL½x15-3/4	29,995	1.6	8.7

Notes: (a) Includes effect of shell width $\ell = 1.10\sqrt{Rt}$.

C.6. Piping

Inspection of the 1½-inch and 2-inch diameter piping lines located along the upper circumference of the inner vessel of the endcap calorimeter indicates that they are very similar to the 1½-inch and 2-inch lines on the inner vessel of the Central Calorimeter. The piping on the CC inner vessel was found to be acceptable, meeting the general requirements of Reference 3. Based on the similarity of the piping systems on the two vessels, the 1½-inch and 2-inch diameter lines on the EC inner vessel were judged to be acceptable, subject to the same restriction on thermal fatigue cycling as the CC piping. Refer to Section B.6 of this report.

C.7. Nozzles

Design details of nozzles in the EC inner and outer vessels were not provided. However, since the cylindrical shells of the corresponding EC and CC vessels are identical in thickness, radius, and pressure loading, nozzle details in the cylindrical shells of the CC vessels will be adequate in the cylindrical shells of the EC vessels, for similar loading conditions. Refer to Section B.7 of this report.

Design details of the nozzles for the aluminum centerline tubes, located in the front and rear heads were not available at the time of this review.

C.8. Local Shell Stresses at Nozzles

Local shell stresses at the piping nozzles and the support stanchions of the CC vessels were evaluated using well-known analytical techniques[20], and were found to be acceptable. Piping nozzle loads in the EC vessels were assumed to be similar to those of the CC vessels, based on the similarity of the shells and piping systems. Refer to Section C.6. The local stresses in the cylindrical shells of the EC vessels were therefore considered acceptable by comparison to local stresses in the CC vessels.

The support stanchion design of the EC vessels are similar to those of the CC vessel. Analysis of local stresses in the CC argon vessel shell at the support stanchion indicated that the maximum stanchion load without additional reinforcement was 32 kips. The reinforcement provided to satisfy Articles UG-36 through UG-41 were not considered to contribute to the shell strength. Based on the similarity of the EC stanchion and shell joint to the CC joint, the limit of 32 kips per stanchion unreinforced also applies to the EC vessels. However, the rear external ring, designed to support the empty shell with the rear head removed, stiffens the shell locally around the nozzle. The reinforcement provided by the ring is adequate to support a load of 95 kips at each rear stanchion. The allowable bending stress is $2/3Sy = 20$ ksi, per 13-4(b)(2).[1] Using weights of 26 kips for the dry vessel and 135 kips for the liquid argon and displaced liquid volume, distributed 76/24 percent rear/front, the maximum applied load is 62 kips per

rear stanchion, which is less than the 95 kip capacity. The minimum ring section modulus in the vicinity of the stanchion required to support the 62 kips load at a stress of 20 ksi is 9.6 in^3. Refer to the calculations for further information.

The front stanchions are located with 2 inches clear shell between the edges of the stanchion and front reinforcement ring. The stanchion joint is therefore unreinforced by the ring. The actual load on the front stanchions is 20 kips, which is less than the 32 kip capacity, unreinforced. The load capacities at all support stanchions of the vacuum vessel exceed the total vacuum vessel weight. Local stresses are therefore acceptable.

D. VESSEL SUPPORTS

D.1. Description

The CC vessels are supported at four locations as shown in Figure 2 by a complex assembly of members which allow free thermal expansion and contraction of the inner vessel. A typical assembly is shown in Figure 19 and consists of components as follows. A vertical 12-inch Schedule 40S stanchion penetrates the cylindrical shell at a "hillside" angle of 49 degrees. Inside the stanchion is a flat shear plate, which sits on 4 inches of thermal insulation. The insulation in turn sits in a counter-bored seat in the top of a circular plate 2-3/8 inches thick and 10-15/16 inches in diameter. This plate has 3/8-inch deep grooves machined into the bottom surface to accommodate fourteen vertical plates, each 0.420 inch thick, 7.686 inches wide and 12.75 inches long. The lower ends of the fourteen plates are inserted in machined grooves in the top surface of a circular plate 2 inches thick and 12 inches in diameter. This lower plate is inserted in the bottom of a vertical 12-inch Schedule 40S stanchion which penetrates the vacuum vessel. The fourteen vertical plates are enclosed by the vacuum vessel stanchion. The top of this stanchion is cutoff to maintain a clearance below the stanchion which penetrates the argon vessel. The argon vessel is thereby thermally isolated from the vacuum vessel, and free to undergo thermal expansion. Each of the four assemblies is supported by massive cradles mounted on roller bearings.

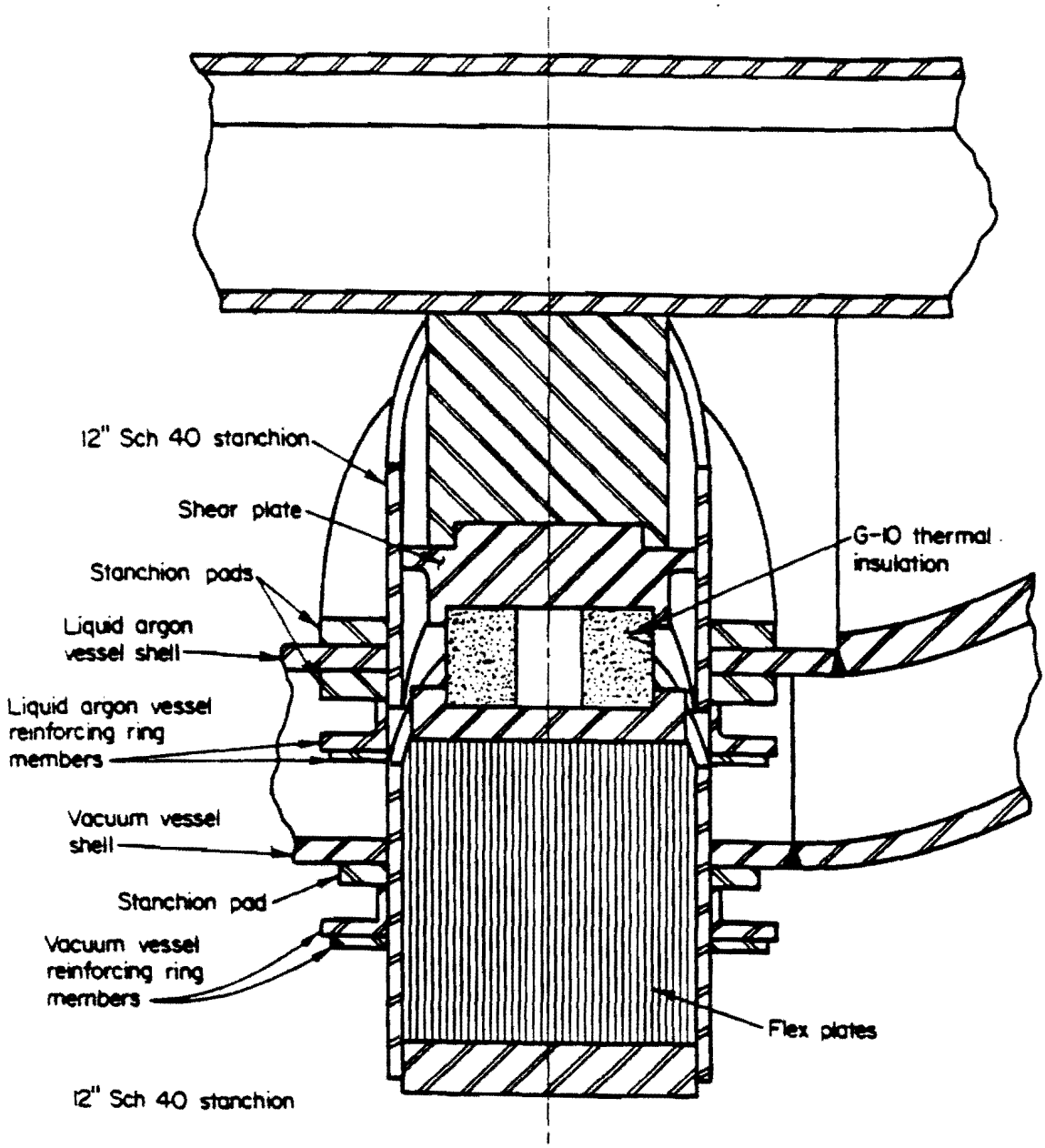

FIGURE 19. VESSEL SUPPORT ASSEMBLY

Each of the CC pedestals will be loaded up to 179 kips. The EC cryostats weigh less than the CC cryostat, but the EC center of gravity is not located symmetrically between the front and rear pair of pedestals. The maximum load on the EC pedestals is 197 kips, which exceeds the CC loads. The supports have been evaluated for the 197 kip load.

D.2. Flex Plates

The fourteen vertical plates in each pedestal assembly are made from Inconel 718, with S_y = 150 ksi, S_u = 180 ksi, and E = 29.8 x 10^6 psi. The plates flex in a reversed bending mode as the vessel undergoes thermal expansion. The weak axes of the plates are toed in 20 degrees with respect to the vessel longitudinal axis, to accommodate both longitudinal and radial components of thermal displacement. The horizontal component of the radial thermal contraction of the argon vessel, from 70 F to -300 F, is 0.230 inch. The longitudinal movement through this change in temperature is 0.081 inch. The net displacement at the tops of the flex plates is 0.244 inch, or ¼ inch nominally.

The 197 kip pedestal load applies an average vertical compression to the flex plates of 14070 lb/plate. The plates are thus slender beam-columns. The minimum critical elastic buckling load of beam-columns occurs in a cantilever bending mode where $P_{cr} = \pi^2 EI/4L^2$.[23] With a plate moment of inertia of 0.4744 in^4, P_{cr} = 21450 lb/plate, which exceeds the average plate load of 14070 lb/plate by a factor of 1.5. End conditions are more highly controlled than in the cantilever model used such that the actual P_{cr} is several times the 21450 lb/plate value calculated. Therefore, it is unlikely that local overloading of individual plates by rotations or moments transferred from the argon vessel or the frame supporting the argon vessel internals will result in a critical load condition. The entire vessel is stabilized against nonsymmetric lateral displacement in any direction by the combined horizontal angle between front and rear supports of 40 degrees, as shown in Figure 2.

The flex plates, being primary supports, were also evaluated by the AISC Specification for the Design, Fabrication, and Erection of Structural Steel for Buildings, which comprises Part 5 of Reference 4. Bending moments

and transverse shear loads in the plates under the average compressive load, with a ¼ inch reversed-bending deflection, were calculated to be 12315 in-lb and 1655 pounds, respectively. Bending, axial, and shear stresses are shown in Table 9, along with the corresponding allowable stresses per the AISC Specifications. The AISC specifies limits on the combined bending-compression interaction, by Equations 1.6-1a[4]. The plates were treated as guided cantilevers, with an effective buckling length factor K = 1.2, per 5-1.8 of Reference 4. This resulted in a bending-compression interaction in Equation 1.6-1a of 1.23, which exceeds the allowable of 1.0. However, this assumption was very conservative in that it disregarded the resistance to provided by the plates at the adjacent supports, with their bending axes rotated a relative 40 degrees. In that case, an effective length factor of K = 0.65 could be justified, and the bending-compression interaction would be only 0.615, which is well under the allowable of 1.0. The AISC formulas possess an inherent Safety Factor of 2.0 for both bending and elastic buckling. Refer to Table 22 for a detailed summary of the AISC evaluation.

D.3. Support Stanchions

The support stanchions below the argon and vacuum vessels are both 12-inch Schedule 40S pipe. The stanchions are cut diagonally to fit the vessel curvatures. The stanchions were analyzed and considered to be acceptable for their intended purpose.

D.4. Shear Disc

A shear disc is located inside the argon vessel stanchions. The disc serves three purposes. One function is to transfer argon vessel dead weight from the stanchion to the flex plate assembly. A second function is to provide a seating surface for the internal module support structure. The third function is to seat the complete vessel assembly positively on the G-10 insulation pad. The shear discs were analyzed and considered acceptable for their intended function.

TABLE 22. AISC EVALUATION OF FLEX PLATES

	Average Load Per Plate	Stress, psi	Allowable Stress, psi	Allowable Stress Equation	AISC Reference Article
I. INDIVIDUAL LOADINGS COMPONENTS:					
Bending	12,315 in-lb	54,490	112,500	$F_b = .75\ Fy$	5-1.5.1.4.3
Shear	1,655 lb	513	60,000	$F_v = .40\ Fy$	5-1.5.1.2.1
Compression	14,070 lb	4,360	9,375[a] 31,720[b]	$F_a = \frac{12\pi^2 E}{23(K\ell/r)^2}$	5-1.5.1.3.2

II. COMBINED LOADING INTERACTION:

EQUATION 1.b-1a,

$$I = \frac{f_a}{F_a} + \frac{C_m}{1 - f_a/F'_e} \cdot \frac{f_b}{F_b} \leq 1.0,\ C_m = .85,\ F'_e = F_a$$

$$I = .465 + .769 = 1.234 > 1.0^{(a)}$$

$$I = .138 + .484 = .615 \leq 1.0^{(b)}$$

Notes: (a) K = 1.2.
(b) K = 0.65.

D.5. Cradle Assemblies

Below each vessel assembly is a massive steel cradle, mounted on four roller bearing devices. The cradles for the EC and CC vessel assemblies differ somewhat in dimensions, but are similar in construction. Each cradle consists of two box section beams parallel to the vessel centerline axis and to each other. Each is approximately 16 inches wide, 21 inches deep, and constructed of 1½-inch thick plate. The beams of the CC cradle are 70 inches in length, while those of the EC cradle are 60 inches in length. Extensions 9 inches in length at each end accommodate the rolling elements. The beams are spaced 28 inches between inside edges. Bridging the two beams are fore and aft crossmembers 18 inches wide and 19½ inches deep at their centers, also constructed of 1½-inch thick plate.

In line with the box crossmembers are tapered box section arms extending outward approximately 44 inches from the outboard sides of the longitudinal beams, and approximately 23 inches upward from the top edges of the beams. These arms support the cryostat flex plate assemblies, 73 inches horizontally from the vessel centerline and 46 inches off the ground elevation.

The main structural members were evaluated for estimated combined vessel weights. The acceptance criterion was the AISC Specification for the Design, Fabrication, and Erection of Structural Steel for Buildings, which comprises Part 5 of Reference 4. The built-up box sections were determined to be adequate for the estimated loading. Material was assumed to be a steel with minimum yield strength of 35 ksi. Welds were not specified in available data and were not evaluated in the review.

E. THERMAL STRESS ANALYSIS

Conduction heat transfer and thermal expansion stress analyses of the inner vessels were performed to establish a maximum safe rate of cooling.

The thermal stress problem is two-fold. The first aspect of the problem is the axisymmetric stresses resulting from temperature differences through the vessel walls and along the vessel meridion. The second aspect is the nonaxisymmetric stresses caused by the constraint against thermal

expansion provide by the internal modules at their support points. This second scenario is postulated to occur due to the large thermal mass and structural stiffness of the modules compared to the vessel shell.

E.1. Analysis Methods

a. Acceptance Criteria

It was specified by the user that the maximum cooling rates of the vessels be acceptable for 1,000 full cooldown cycles. Thermal fatigue analyses were performed in accordance with Section VIII, Division 2.

Section VIII, Division 2 categories equivalent linear thermal stresses as secondary in nature.(2) As such they are subject to the limit of 3 S_m in combination with other primary and secondary stresses that may occur simultaneously. This assures shakedown to elastic action after a few repetitions of the load.

The Code specifies additional criteria be applied to stresses due to repeated and cyclic loadings, including thermal expansion stresses. Article AD-160 specifies that a fatigue analysis be performed unless all of Conditions A or B of AD-160.1 are satisfied. Also, all of Conditions AP or BP of AD-160.3 must be satisfied for nonintegral attachments and components.(2) Mandatory Appendix A, paragraph 4-136 allows relaxation of some basic stress allowables if a plastic or limit analysis is performed, and gives specific requirements in 4-136.7 for a simplified elastic-plastic analysis. Specifically, the limit of 3 S_m may be exceeded if specified conditions are satisfied. Mandatory Appendix 5 specifies procedures for performing fatigue and thermal stress ratchet analyses. These items were addressed in the analyses. In addition, the possibility of local buckling of the reinforcement ring compression flanges was examined, using AISC Specifications.

Article AD-160.1 also permits user experience with comparable equipment operating under similar conditions and design requirements to be a valid criterion for determining the need for a fatigue analysis. Due to conservatisms inherent in the analyses performed, significant applicable service experience may provide justification for exceeding the limits imposed by this analysis.

b. Axisymmetric Analysis

The transient heat conduction analyses were performed using program TACO2D, a finite element 2-D heat transfer code.[24] The following simplifying assumptions were made in performing the analyses:

1. 2-D, axisymmetric problem definition;
2. linear function with time (ramp) of cooling medium temperature, from +70 F to -300 F;
3. infinite surface heat transfer coefficient, with cooling medium temperatures applied directly to the inner shell surfaces;
4. perfect thermal insulation at shell outer surfaces;
5. the cool down is atmospheric, with no sustained pressure loading occurring;
6. no liquid pooling;
7. no local hot or cold spots at nozzles, supports or equipment;
8. no thermal interaction with internal modules;
9. thermal material properties of 304 stainless steel versus temperature per Reference 25.

Stresses were evaluated at a time step corresponding to maximum calculated temperature differences through the thicknesses of the structure. The identical meshes used in TACO2D were input with nodal temperatures to program SAVFEM[26] to obtain linear thermal expansion stresses. SAVFEM is a general-purpose finite element stress analysis code. Stress output includes "effective" or octahedral stress, which is virtually equivalent to the stress intensity defined as a criterion in Reference 2.

c. Nonaxisymmetric Analysis

The modules consist of box-type elements made from stainless steel plate, containing large quantities of uranium-based metal alloys. The modules form a massive ring-like structure inside the vessels, supported at the vessel support points. Compared to the vessel shells, the modules were expected to respond very slowly to thermal inputs. Therefore, a difference of up to 370 F was postulated to occur between the average shell temperatures of the shells and modules. The modules were also judged to be structurally much stiffer

than the vessel shells, such that they provide significant constraint against free thermal expansion or contraction of the shells at their common support points.

The bending stresses in the shells resulting from the constrained expansion or contraction were estimated by a combination of hand calculations and finite element anlayses. Maximum differences between average temperatures of the modules and shells were determined such that fatigue and structural integrity criteria were satisfied.

E.2. Central Calorimeter Inner Vessel

a. Axisymmetric Temperature Solution

The CC inner vessel was evaluated via axisymmetric finite element heat conduction analysis, using program TACO2D. The mesh consisted of 106 nodes and 67 4-node linear temperature elements, with two such elements through the shell thickness, as shown in Figure 20. The meshes used two 4-node linear temperature elements through the shell thickness. The reinforcement rings were included in a simplified manner.

Temperatures were calculated for cooldown rates of 92.5 F/hour and 185 F/hour, corresponding to 4-hour and 2-hour temperature ramps, respectively. Time steps of 0.5 hour were used. Temperatures as a function of time are shown in Figures 21 through 22. Through-thickness temperature differences were found to be less than 3 F for all shell segments. Due to their external location, the outer elements of the reinforcing rings lagged considerably behind the thermal response of the rest of the vessel. The lag was approximately 135 F in the 4-hour cooldown, and approximately 220 F in the 2-hour cooldown. The shell at the ring-shell joints also lagged by approximately 10 F locally, due to the thermal mass of the rings.

b. Axisymmetric Stress Solution

Stress intensities were calculated for the time step at which -300 F was reached on the inner surface of the vessel. Due to the relatively quick thermal response of the shell with respect to the rings, this represented the

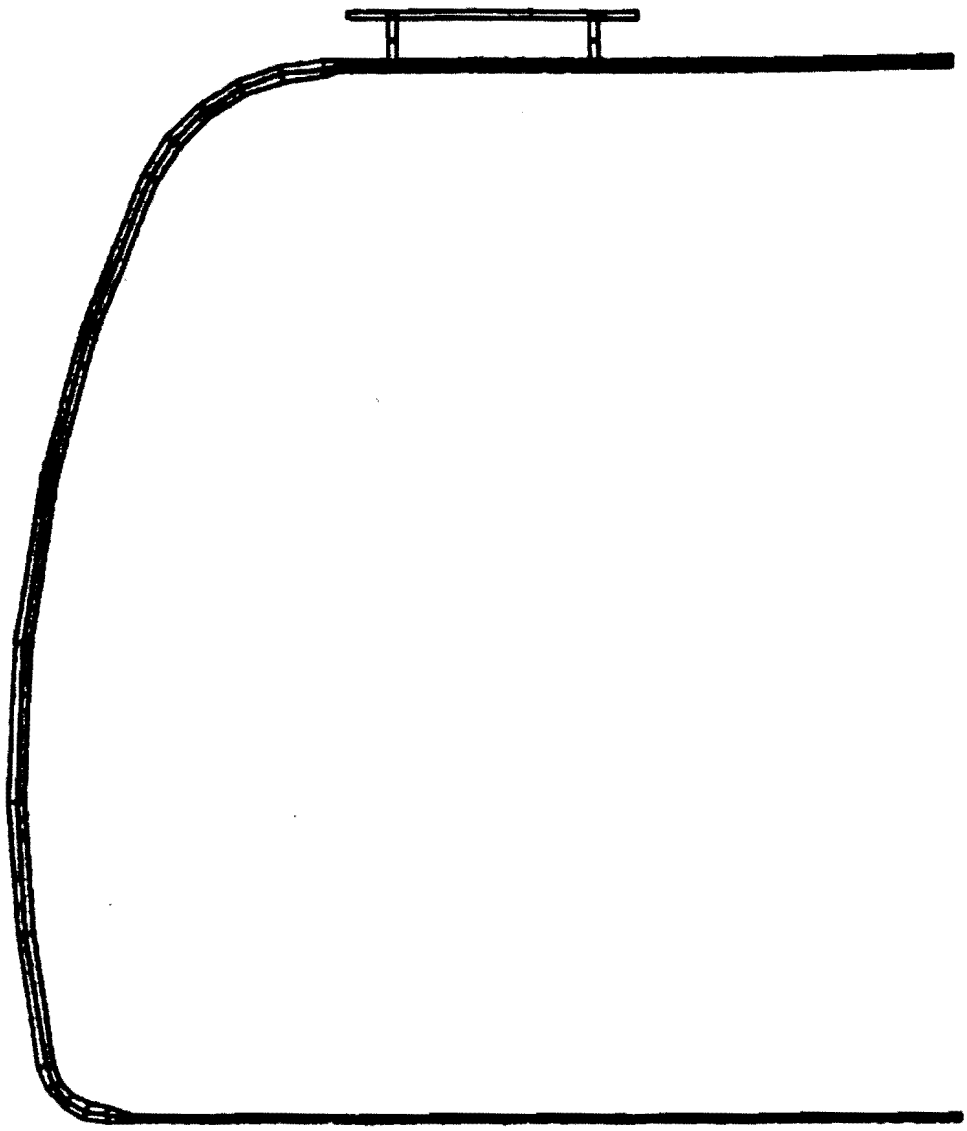

FIGURE 20. AXISYMMETRIC TACO2D/SAVFEM HEAT CONDUCTION AND THERMAL STRESS MODEL, ENDCAP CALORIMETER

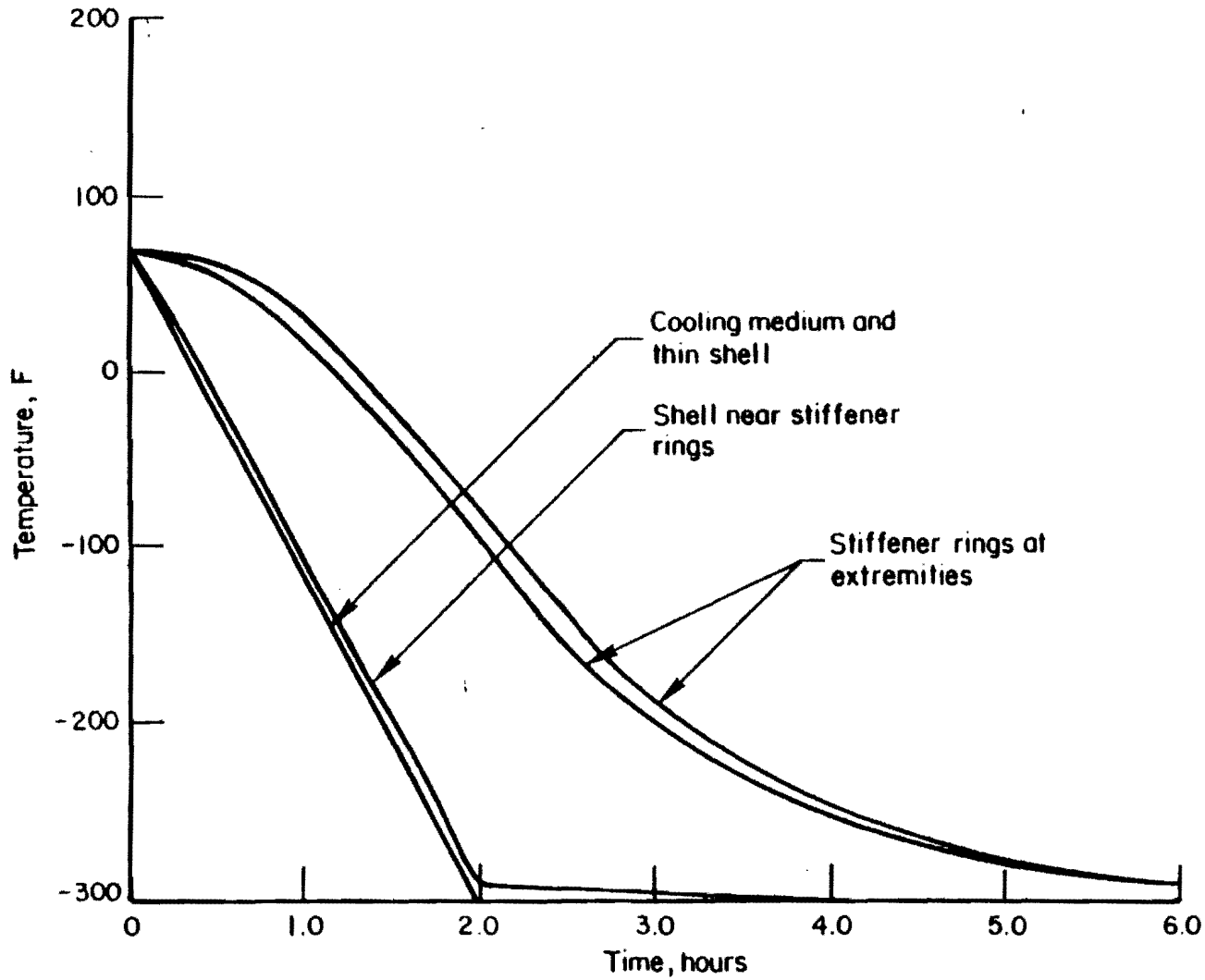

FIGURE 21. TEMPERATURE PROFILES, 185 F/HR, CENTRAL CALORIMETER

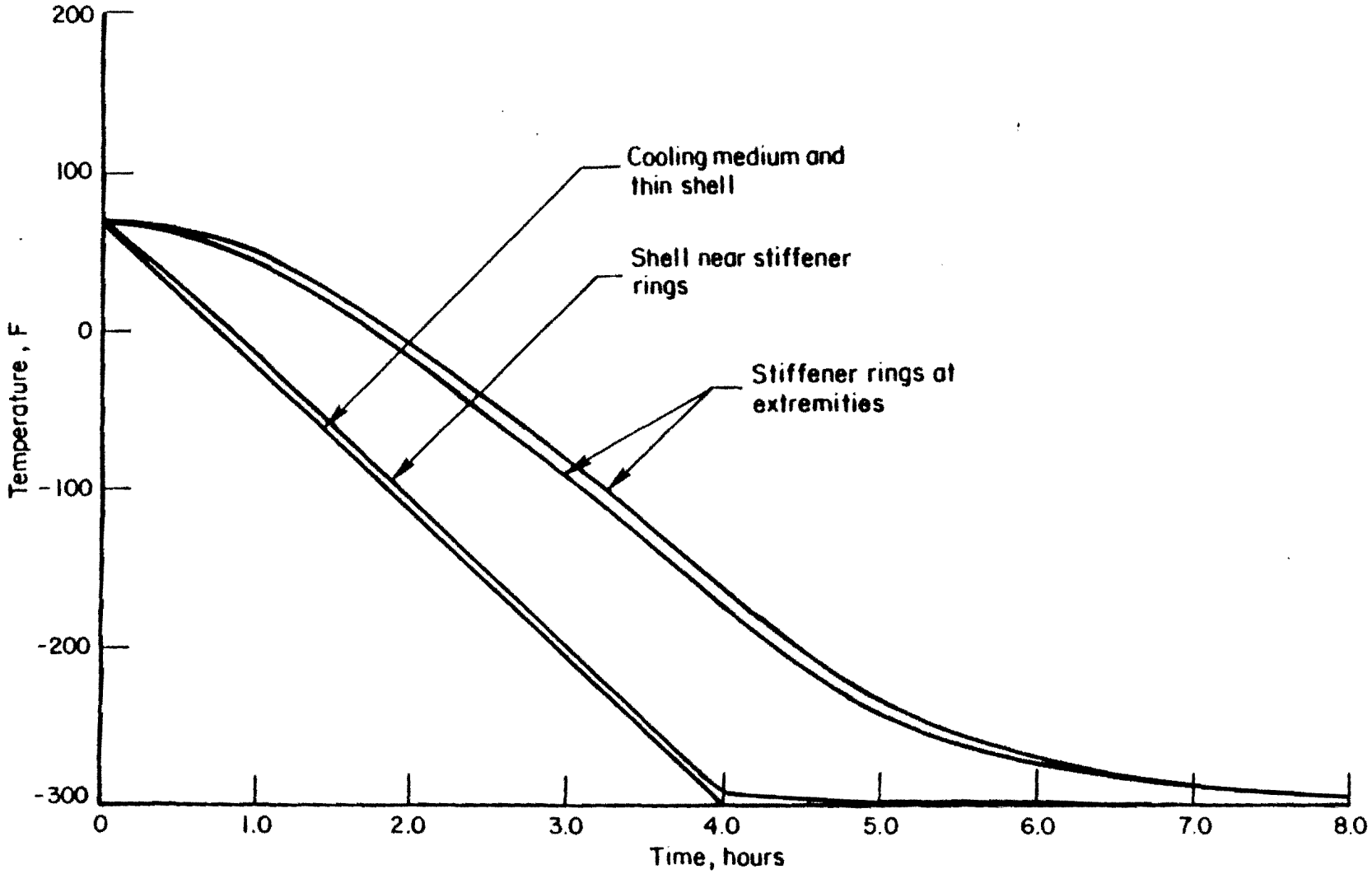

FIGURE 22. TEMPERATURE PROFILES, 92.5 F/HR, CENTRAL CALORIMETER

time of greatest temperature differences, and consequently, greatest stresses. The SAVFEM mesh was the same as was used in the heat transfer solution, but with cubic integration stress elements substituted.

A summary of stress intensities calculated for different shell segments is shown in Table 23. At all locations, with one exception, shell stress intensities were very low relative to the Division 2 allowable of $3\ S_m = 60$ ksi. The location of highest stress was in the outer cylinder at the attachment points of the rings to the shell. High stresses occurred due to the constraint against vessel contraction enforced by the relatively warmer rings. The stresses in excess of the yield strength were calculated elastically.

TABLE 23. CENTRAL CALORIMETER INNER VESSEL SHELL THERMAL STRESS INTENSITY SUMMARY

Location	Stress Intensity, ksi 92.5 F/HR[a]	Stress Intensity, ksi 185 F/HR[b]
Outer Cylinder	6.5 - 8.9	10 - 14
Outer Knuckle	4.5 - 6.5	7.1 - 11
Head	0.6 - 2.2	0.5 - 3.9
Inner Knuckle	1.0 - 2.0	0.3 - 3.4
Inner Cylinder	0.2 - 0.6	0.4 - 1.0
Cylinder at Ring	11 - 35	18 - 57

Notes: (a) 92.5 F/HR = 4-hour cool down
(b) 185 F/HR = 2-hour cool down

c. Fatigue Evaluation

Conditions A and B per AD-160.2 were applied to the shell segments. Condition A could not be satisfied assuming 1,000 full cooldown cycles. However, Condition B was satisfied, assuming that all materials of construction are the same, and no cyclic mechanical loads other than pressure exist.

Conditions AP and BP per AD-160.3 were applied to the reinforcing rings. Condition AP could not be satisfied assuming 1,000 full cooldown cycles. Condition BP was satisfied for the 4-hour cooldown, but not for the 2-hour cooldown, with similar assumptions made as in the Condition B evaluation of the shell. A fatigue evaluation of shell stresses at the ring joints was therefore performed for both cooldown rates. Nonintegral nozzle thermal stresses were not evaluated.

In the shell, thermal stresses at the ring joints were less than 3 S_m (60 ksi) for both cooldown rates. To consider uncertainties inherent in any simplified numerical analysis, and to allow for some level of stress due to deadweight or pressure that may occur during the cooldown process, the fatigue stresses were arbitrarily increased by a factor of 1.5. A fatigue analysis was performed in accordance with 4-136.7 and Appendix 5 of Division 2, using the increased stresses. The analysis indicated an allowable number of cycles over 25,000 for the 4-hour cooldown, and 200 for the 2-hour cooldown. Both values exceed the probably number of cooldown cycles that will be experienced in service. However, only the 4-hour cooldown is acceptable for the design specification of 1,000 cycles. In addition, it is probable that a 3-hour cooldown would be found acceptable. This case was not evaluated, however.

It was assumed that the cooldown was atmospheric, with no steady state pressure condition occurring simultaneously. Therefore, thermal stress ratchet in the shell was not investigated.

d. Reinforcement Ring Evaluation

Compression in the flanges of the reinforcing rings are shown in Table 24, for 2-hour and 4-hour cool down rates.

Based on Articles 5-1.5.1.4 and 5-1.9.1 of Reference 4, the compressive stresses in the outer flange elements of the rings are acceptable for the 4-hour cooldown rate, without requiring stiffening to prevent lateral buckling. Stresses for the 2-hour cooldown exceed the yield strength and the allowable compressive stresses. The combined members provide substantial additional stiffness, however, the susceptibility of the compression flanges to local buckling cannot be accurately assessed at the calculated stress level.

TABLE 24. CENTRAL CALORIMETER INNER VESSEL REINFORCING RING THERMAL STRESS SUMMARY

Cooldown Rate	92.5 F/HR	185 F/HR
Flange Compression (ksi)[a]	20	33
Ring-Shell Joint Tension (kips/inch)	8.6	14.3
Ring-Shell Joint Moment (inch-kips/inch	0.4	0.7

Notes: (a) Compression flange thickness of 0.5 in and width of 18 in.

Table 24 also summarizes loads at the ring shell joints. These are provided to assist in specifying minimum welds. Welds were not specified at the time of analysis, and were not evaluated.

e. Nonaxisymmetric Analysis

The support points of the CC vessel and modules are located along reinforcement rings, 49 degrees circumferentially from bottom dead center. Since the rings are significantly stiffer than the shell, the loads induced by the thermal expansion constraint due to the modules essentially act across the rings. The magnitude of the loads are proportional to the temperature difference and the ring stiffness.

The simple analytical models shown in Figure 23, per Reference 16, were used to obtain the maximum bending moment in the rings due to a transverse deflection at the support points corresponding to a 370 F change in temeprature. This moment was estimated to be 1.061×10^6 in-lbs. This is shown relative to other significant values in Figure 24.

The thermal moment results in a strain for which the equivalent linear stress is approximately 68 ksi. This is acceptable from a fatigue standpoint. However, it occurs beyond the knee of the moment resistance

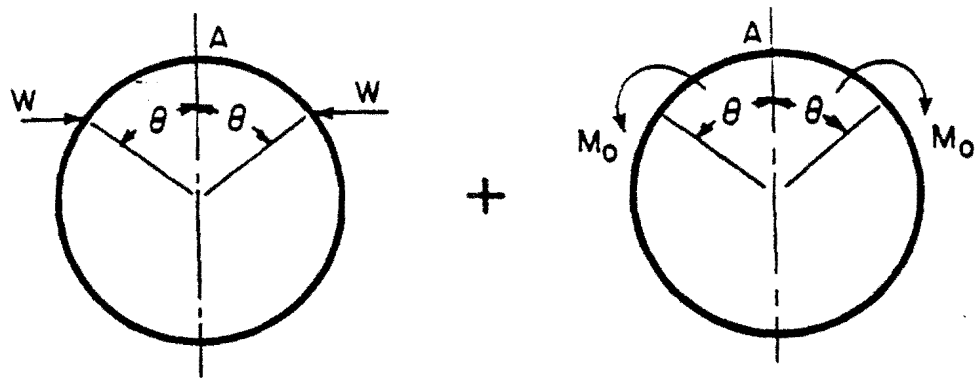

FIGURE 23. SIMPLIFIED MODELS FOR ASYMMETRIC THERMAL STRESS ANALYSIS

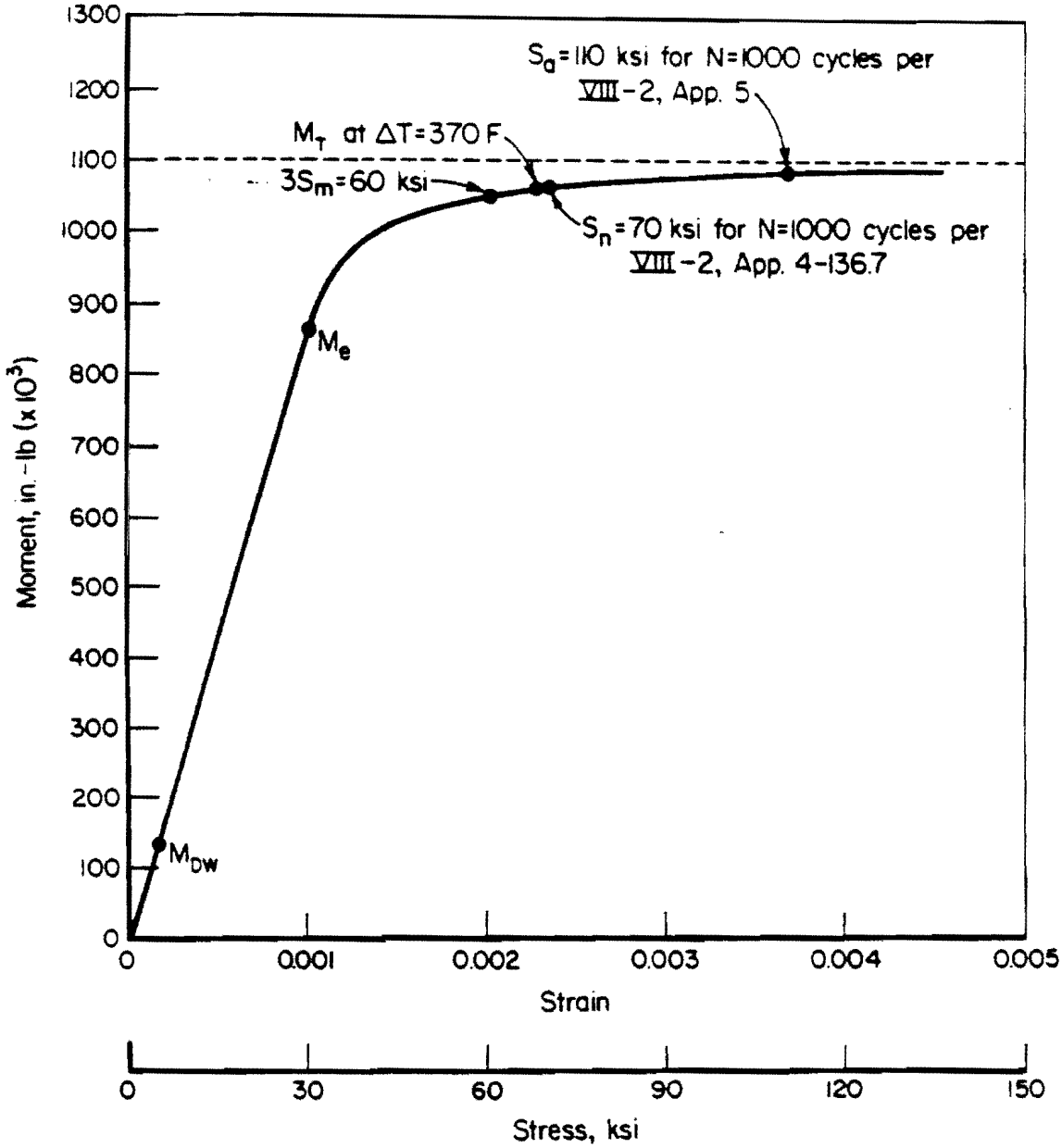

FIGURE 24. MOMENT RESISTANCE, CENTRAL CALORIMETER REINFORCEMENT RINGS

curve, such that any sustained loading may result in uncontrolled local deformations.

The sum of ring bending moments due to thermal constraint plus deadweight were limited to the linear range of Figure 24, at 900 x 10^3 in-lb. This resulted in a maximum allowable difference between average temperatures of the modules and shell of the central calorimeter of 250 F.

f. Recommendations

Based on the results of the stress analyses, the maximum recommended cooldown rate independent of the modules is 92.5 F/Hr. This corresponds to a period of 4 hours to reach an internal temperature of -300 F from 70 F. In addition, a 1-hour hold period at an internal temperature of -300 F should be observed prior to pressurizing or adding fluid to the vessel. These time limits also apply to the warming cycle.

Conservatisms inherent in the analysis suggest that a 3-hour or perhaps 2-hour rate is feasible for a limited number of cycles. As is indicated by AD-160.1, significant applicable service experience may provide a basis for accepting more rapid rates of cooling or warming than 4 hours.

In addition to the above limits, it is recommended that the difference in average temperatures of the module plates and the vessel shell be limited to no more than 250 F during the cooling and warming cycles.

E.3. Endcap Calorimeter Inner Vessel

a. Axisymmetric Temperature Solution

The EC inner vessel was evaluated via axisymmetric finite element heat conduction analysis, using program TAC02D. The mesh consisted of 141 nodes and 90 4-node linear temperature elements, with two such elements through the shell thickness, as shown in Figure 25. The reinforcement rings were included in a simplified manner.

Temperatures were calculated for a cooldown rate of 92.5 F/HR, corresponding to a 4-hour temperature ramp. Time steps of 0.5 hour were used. Temperatures as a function of time are shown in Figure 26. Through-thickness

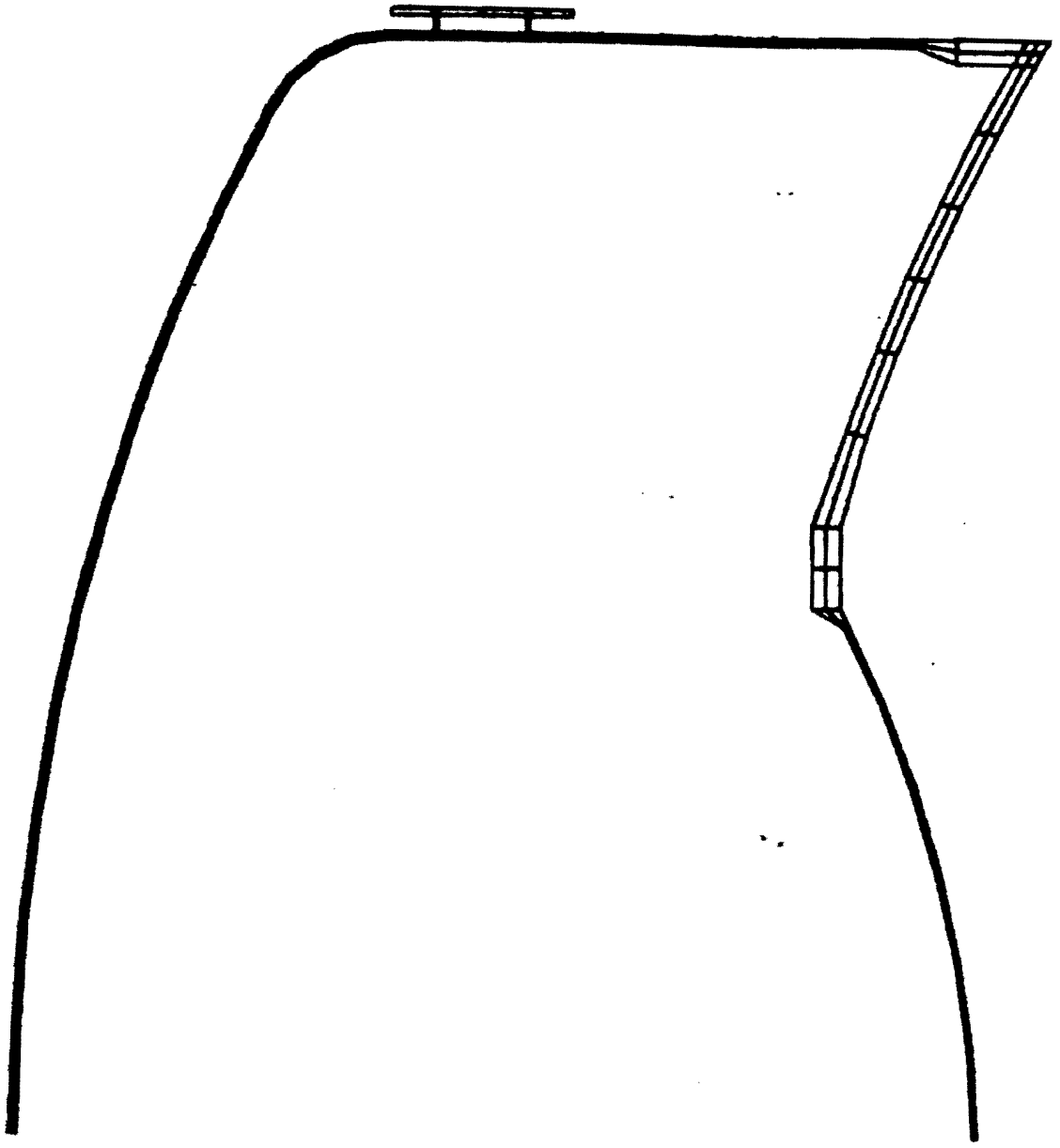

FIGURE 25. AXISYMMETRIC TACO2D/SAVFEM HEAT CONDUCTION AND THERMAL STRESS MODEL, ENDCAP CALORIMETER

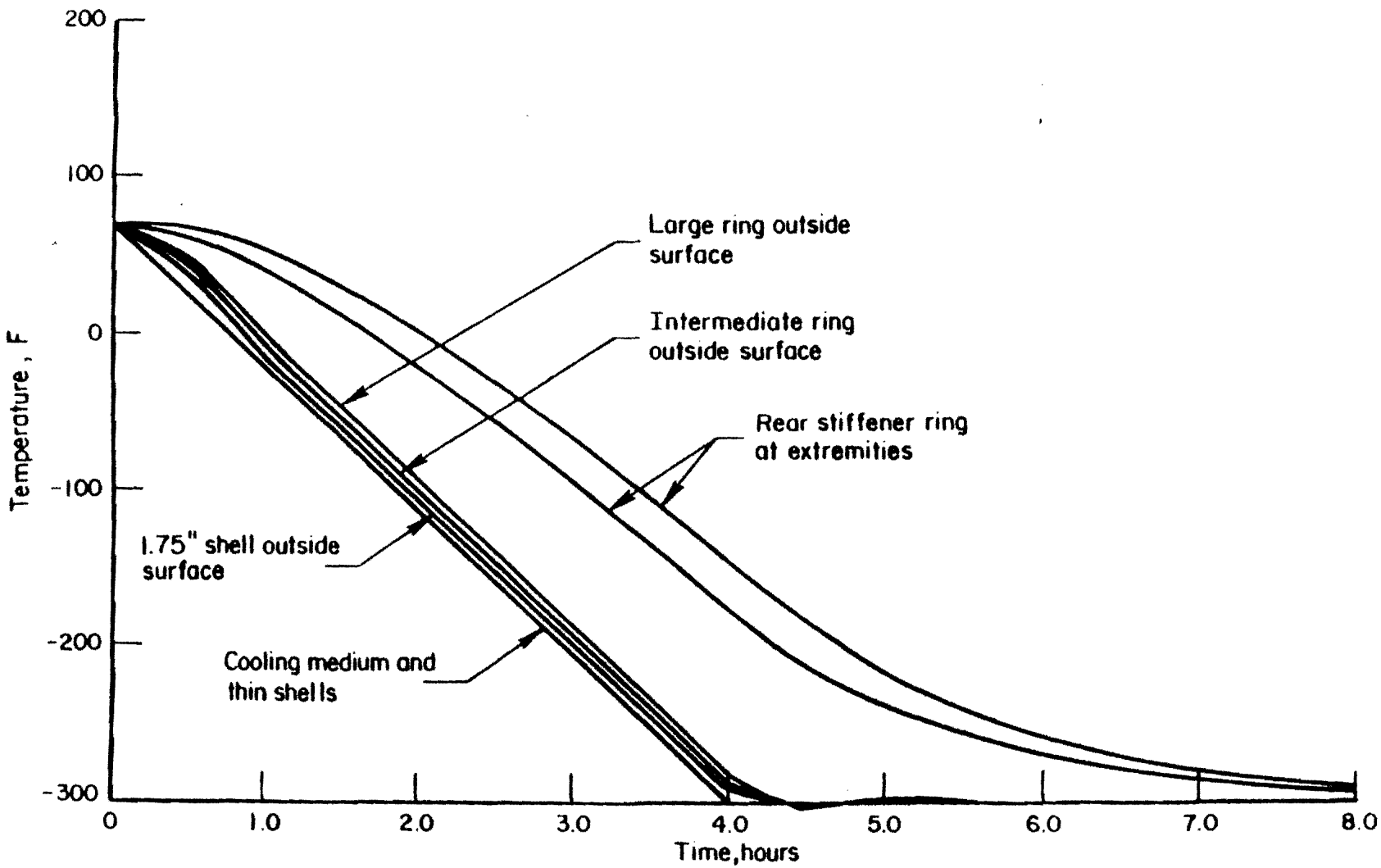

FIGURE 26. TEMPERATURE PROFILES, 92.5 F/HR, ENDCAP CALORIMETER

temperature differences were found to be less than 2 F for the cylinder, rear head, and 100 inch radius front cap. Through-thickness temperature differences in the 1.75 inch-thick concave shell and front head rings were found to be 7 F and 15 F, respectively. The outer members of the rear reinforcement ring lagged behind the thermal response of the vessel by up to 150 F, due to its external location. The shell at the rear ring-shell joint also lagged by approximately 10 F locally, due to the thermal mass of the ring.

b. Axisymmetric Stress Solution

Stress intensities were cacluated for the time step at which -300 F was reached on the inner surface of the vessel. Due to the relatively quick thermal response of the shell with respect to the rings, this represented the time of greatest temperature differences, and consequently, greatest stresses. The SAVFEM mesh was the same as was used in the heat transfer solution, but with cubic integration stress elements substituted.

A summary of stress intensities calculated for different shell segments is shown in Table 25. At all locations, stresses were below the Division 2 allowable of $3S_m$ = 60 ksi, and were also below the yield stress of 30 ksi.

TABLE 25. ENDCAP CALORIMETER INNER VESSEL SHELL THERMAL STRESS INTENSITY SUMMARY

Location	Stress Intensity, ksi 29.5 F/HR
100" Spherical Cap	0.2 - 1.3
Inner Front Ring	0.8 - 1.7
200" Concave Shell	0.3 - 1.6
Outer Front Ring	1.6 - 8.4
Cylinder	3.5 - 1.4
Cylinder at Rear Ring	10 - 20
Rear Head Knuckle	4.9 - 6.6
Rear Head Crown	0.2 - 2.7

c. Fatigue Evaluation

Conditions A and B per AD-160.2 were applied to th shell segments. Condition A could not be satisfied assuming 1,000 full thermal cycles. However, Condition B was satisfied, assuming no mechanical loads other than pressure exist.

Conditions AP and BP per AD-160.3 were applied to the composite aluminum-stainless steel nozzles. Neither conditions AP nor BP were satisfied. Therefore, a fatigue analysis of the nozzle should be performed by the user. The nonintegral reinforcement rings were acceptable in accordance with Condition BP.

A fatigue analysis was deemed unnecessary for the calculated level of stresses in the shells and rings, by comparison to the CC vessel.

d. Rear Reinforcement Ring Evaluation

Compression in the rear reinforcement ring flange is shown in Table 26. Based on ARticles 5-1.5.1.4 and 5-1.9.1 of Reference 4, the maximum allowable compression without additional stiffening to prevent lateral buckling is 20 ksi. The combined members provide substantial additional stiffness, however, the susceptibility of the compression flange to local buckling cannot be accurately assessed.

TABLE 26. ENDCAP CALORIMETER INNER VESSEL REAR REINFORCEMENT RING THERMAL STRESS SUMMARY

Cooling Rate, F/HR	92.5
Flange Compression, ksi[a]	26.0
Ring-Shell Joint Tension, kips/inch	9.4
Ring-Shell Joint Moment, in-kips/inch	0.4

Notes: (a) Compression flange thickness of 0.5 inch and width of 16 inch.

Table 26 also summarizes loads at the ring-shell joints. These are provided to assist in specifying minimum welds. Welds were not specified at the time of analysis, and were not evaluated.

e. Nonaxisymmetric Analysis

The modules were postulated to provide constraint against free thermal expansion or contraction of the vessel shell at their common support points. This is due to the relatively great thermal mass and structural stiffness of the modules compared to the vessel shell.

At the rear of the vessel, the module and vessel supports are located directly on the nonintegral external reinforcement ring. The forces due to the thermal constraints at this location were considered to act across the ring. An analysis was performed similar to that for the CC vessel.

The bending moment in the rear ring due to a transverse deflection at the support points corresponding to a 370 F change in temperature was calculated. This moment was estimated to be 450 x 10^3 in-lbs. This is shown relative to other significant values in Figure 27.

The calculated thermal moment is fully elastic, and is acceptable from a fatigue standpoint. However, a sustained loading such as due to the vessel deadweight would result in uncontrolled local deformations.

The sum of ring bending moments due to thermal constraint plus deadweight were limited to the linear range of Figure 27, at 500 x 10^3 in-lbs. This resulted in a maximum allowable difference between average temperatures of the modulus and shell of the Endcap Calorimeter of 250 F.

The front support points of the modules and vessel are located with approximately 2 inches clear shell between the edge of the stanchions and the edge of the front reinforcement ring. This configuraiton does not lend itself to analysis by the simplified methods applied to the rear supports. Therefore, a SAVFEM 3-D finite element model was developed of a 180 degree section of the vessel. The model used 528 nodes and 473 4-node thick plate elements, with three integration points in each element local axis. The model is shown in Figure 28. The loading was a 370 F uniform change in temperature, with constraints at the common support area with the modules and at the line of symmetry.

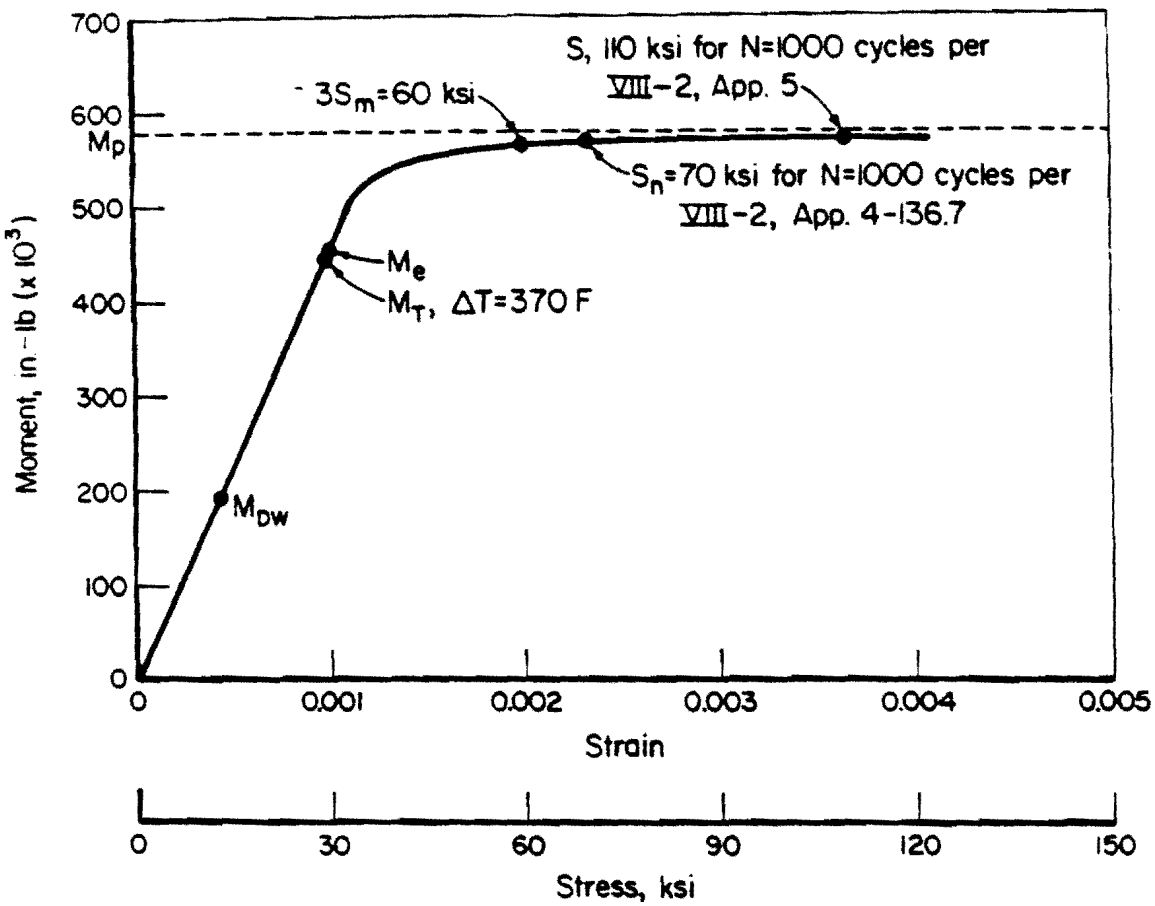

FIGURE 27. MOMENT RESISTANCE, ENDCAP CALORIMETER REAR REINFORCEMENT RINGS

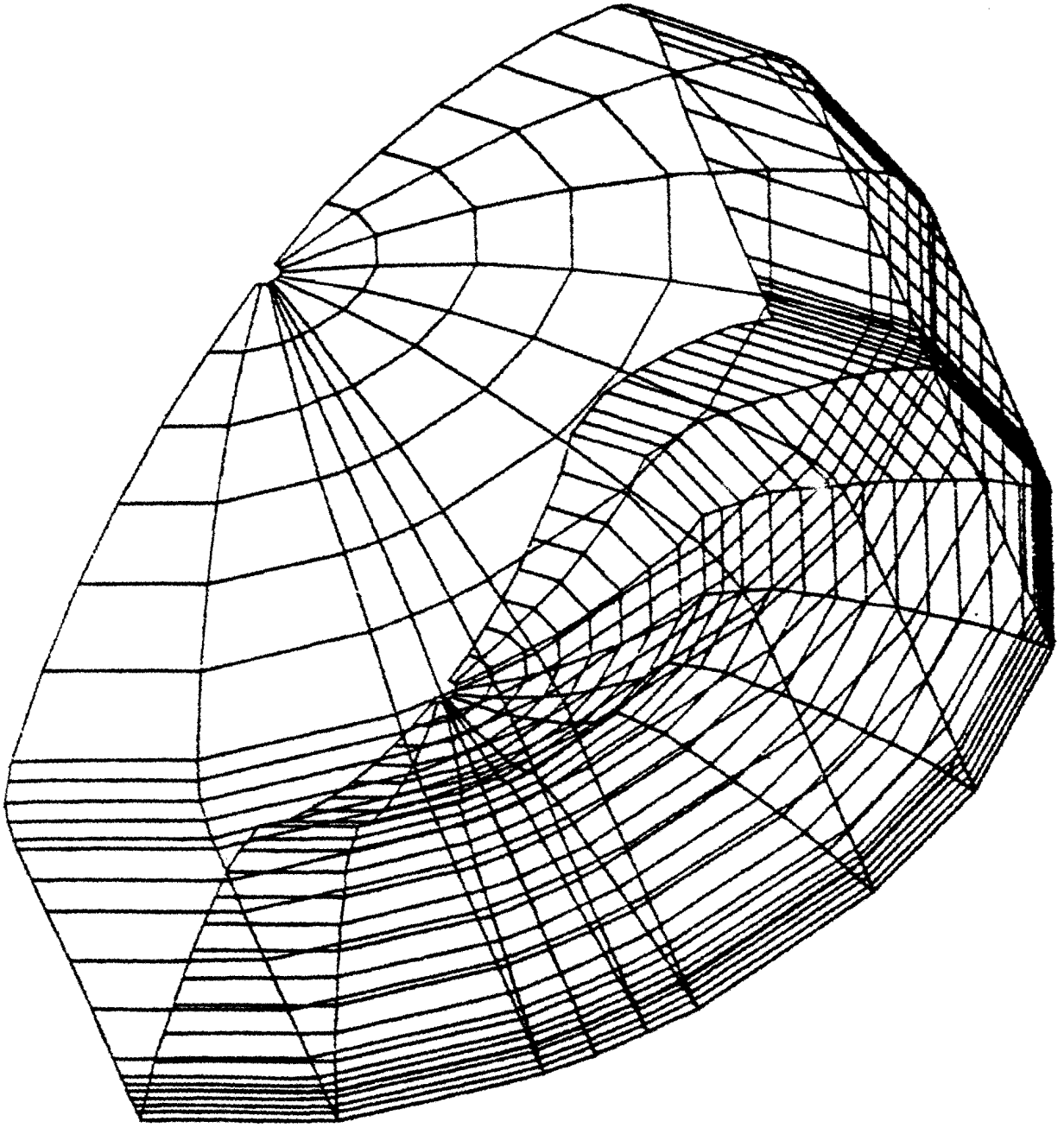

FIGURE 28. SAVFEM 3D ASYMMETRIC THERMAL STRESS MODEL

Results of the analysis indicate the 2 inch gap of clear shell between the front stanchions and the front reinforcement ring to be an area of major stress concentration. Based on a maximum allowable stress intensity of 70 ksi to achieve 1,000 thermal cycles, per Article 4-136.7(2), the maximum difference in average temperaures of the EC modules and shells is 75 F. This is limiting in comparison with the recommended maximum temperature difference of 250 F based on considerations at the rear reinforcement ring.

f. Recommendations

Based on results of the thermal stress analyses, the maximum recommended cooldown rate independent of the modules is 92.5 F/Hr. This corresponds to a period of 4 hours to reach an internal temperature of -300 F from 70 F. In addition, a 1-hour hold period at an internal temperature of -300 F should be observed prior to pressurizing or adding fluid to the vessel. These time limits also apply to the warming cycle.

Conservatisms inherent in the analysis suggest that a 3-hour or perhaps 2-hour rate is feasible for a limited number of cycles. As is indicated by AD-160.1, significant applicable service experience may provide a basis for accepting more rapid rates of cooling or warming than 4 hours.

In addition to the above limits, it is recommended that the difference in average temperature of the module plates and the vessel shell be limited to not more than 75 F during the cooling and warming cycles.

The limit on average temperature difference of 75 F may be raised by any of several modifications to details of the vessel design. These include, and are not limited to, the following:

(a) Support the modules at the large front reinforcement ring. This was substantiated by preliminary analyses performed during the course of the review.

(b) Add a reinforcement ring straddling the front stanchions, similar to the application at the rear of the EC vessels. The ring may or may not be required to encircle the entire vessel.

(c) Add longitudinal reinforcement between the front and rear rings, straddling the front stanchions.

(d) Relocate the front stanchions approximately 10 inches or more from the front ring.

(e) Increase the cylindrical shell thickness in the forward portion of the vessel.

(f) Reduce the design specification of 1,000 thermal cycles to a lower value, if warranted by the intended use.

Any of these alternatives should be verified by further analysis.

REFERENCES

(1) ASME Boiler and Pressure Vessel Code, Section VIII, Rules for Construction of Pressure Vessels, Division 1, 1983 Edition with Addenda through Summer, 1985.

(2) ASME Boiler and Pressure Vessel Code, Section VIII, Rules for Construction of Pressure Vessels, Division 2, Alternative Rules, 1983 Edition with Addenda through Summer, 1985.

(3) ASME Boiler and Pressure Vessel Code, Section VIII Rules for Construction of Nuclear Power Plant Components, Division 1-Subsection NC, Class 2 Components, 1983 Edition with Addenda through Summer, 1985.

(4) AISC Manual of Steel Construction, Eighth Edition, 1980.

(5) Pressure Vessels and Piping: Design and Analysis, A Decade of Progress, Volumes One and Two, ASME, 1972.

(6) Criteria of the ASME Boiler and Pressure Vessel Code for Design by Analysis in Sections III and VIII, Division 2", reprinted in Reference 5.

(7) Kraus, H., "Elastic Stresses in Pressure Vessel Heads", Welding Research Council Bulletin 129, 1968. Reprinted in Reference 5.

(8) Shield, R. T. and Drucker, D. C., "Design of Thin-Walled Torispherical and Toriconical Pressure-Vessel Heads", Journal of Applied Mechanics, June, 1961. Reprinted in Reference 5.

(9) Thurston, G. A. and Holston, Jr., A. A., "Buckling of Cylindrical Shell End Closures by Internal Pressure", NASA CR-540, 1966. Reprinted in Reference 5.

(10) Adachi, J. and Benicek, M., "Buckling of Torispherical Shells Under Internal Pressure", Experimental Mechanics, 1964. Reprinted in Reference 5.

(11) Slember, R. J. and Washington, C. E., "Interpretations of Experimental Data on Pressure Vessel Heads Convex to Pressure", Welding Research Council Bulletin 119, 1967.

(12) Washington, C. E., Clifton, R. J., and Costerus, B. W., "Tests of Torispherical Pressure Vessel Heads Convex to Pressure", Welding Research Council Bulletin 227, 1977.

(13) Huang, N-C, "Unsymmetrical Buckling of Thin Shallow Spherical Shells", Journal of Applied Mechanics, 1964. Reprinted in Reference 5.

(14) Baker, E. H., Capelli, A. P., Kovalesky, L., Rish, F.L., and Verett, R. M., "Shell Analysis Manual", NASA CR-912, 1968.

(15) Trainer, T. M., Hulbert, L. E., Lestingi, J. F., Keith, R. E., et al., "Final Report on the Development of Analytical Techniques for Bellows and Diaphragm Design", Technical Report No. AFRPL-TR-68-22, Battelle Memorial Institute, 1968.

(16) Roark, R. J., Formulas for Stress and Strain, 4th Edition, McGraw-Hill, 1965.

(17) Zick, L. P., "Stresses in Large Horizontal Cylindrical Pressure Vessels on Two Saddle Supports", Welding Journal Research Supplement, 1971. Reprinted in Reference 5.

(18) Workman, G. H., Program SAVFEM Input Data Format Manual, Applied Mechanics Incorporated, January 1, 1982.

(19) Piping Engineering, Tube Turns Division of Chemetron Corporation, 1969.

(20) Wichman, K. R., Hopper, A. G., Mershon, J. L., "Local Stresses in Spherical and Cylindrical Shells Due to External Loadings", Welding Research Council Bulletin 107, 1968. Reprinted in Reference 5.

(21) Jawad, M. H. and Farr, J. R., Structural Analysis and Design of Process Equipment, John Wiley and Sons, 1984.

(22) Jawad, M. H., "Design of Conical Shells Under External Loads", Journal of Pressure Vessel Technology, May 1980.

(23) Timoshenko, S. and Young, D. H., Elements of Strength of Materials, Fifth Edition, Van Nostrand Reinhold, 1968.

(24) Burns, P. J., TACO2D - A Finite Element Heat Transfer Code, Lawrence Livermore Laboratory, January, 1982.

(25) LNG Materials and Fluids, Cryogenics Division, Institute for Basic Standards, National Bureau of Standards, 1977.

EXHIBIT C

FERMILAB SUBCONTRACT GENERAL PROVISIONS
(FL-1)

WITH

ADDENDUM I
(FL-30)

CLEAN AIR AND WATER
(FL-24)

PROGRESS PAYMENTS-TOTAL COSTS
(SM. BUSINESS)
(FL-27A)

LABOR SURPLUS AREA SUB-SUBCONTRACTING PROGRAM
(FL-25)

FERMILAB SUBCONTRACT GENERAL PROVISIONS

1.	Definitions	1
2.	Covenant Against Contingent Fees	1
3.	Officials Not to Benefit	1
4.	Convict Labor	1
5.	Federal, State and Local Taxes	1-2
6.	Affirmative Action for Special Disabled and Vietnam Era Veterans	2-3
7.	Notice of Labor Disputes	3
8.	Utilization of Small Business Concerns and Small Disadvantaged Business Concerns	3-4
9.	Assignment	4
10.	Examination of Records by Comptroller General	4
11.	Equal Opportunity	4-5
12.	Priorities, Allocations and Allotments	5
13.	Affirmative Action for Handicapped Workers	5
14.	Modification Proposals — Price Breakdown	5
15.	Utilization of Women-Owned Small Businesses	5
16.	Utilization of Labor Surplus Area Concerns	5-6
17.	Fermilab-Furnished Property	6-7
18.	Independent Contractor	7
19.	Certified Cost or Pricing Data	7-8
20.	Restrictions on Sub-subcontractor sales to the Government	8
21.	Anti-Kickback Procedures	8-9
22.	Contract Work Hours and Safety Standards Act — Overtime Compensation — General	9
23.	Preference for U.S. Flag Air Carriers	9-10
24.	Limitations on Subcontracting	10

1. DEFINITIONS

1.1 As used throughout this subcontract, the following terms shall have the meanings set forth below:

(a) The term "Government" shall mean the Government of the United States acting through the United States Department of Energy or its successor.

(b) The term "Department" shall mean the United States Department of Energy or any duly authorized representative thereof.

(c) The term "Fermilab" shall mean Universities Research Association, Inc., a non-profit organization organized under the laws of the District of Columbia, or any duly authorized representative thereof.

(d) Except as otherwise provided in this subcontract, the term "Sub-subcontracts" includes purchase orders under this subcontract.

(e) "Manager" shall mean the person in charge of business services for Fermilab or his written designee.

2. COVENANT AGAINST CONTINGENT FEES

2.1 (a) The Subcontractor warrants that no person or agency has been employed or retained to solicit or obtain this subcontract upon an agreement or understanding for a contingent fee, except a bona fide employee or agency. For breach or violation of this warranty Fermilab shall have the right to annul this subcontract without liability or, in its discretion to deduct from the subcontract price or consideration, or otherwise recover, the full amount of the contingent fee.

(b) "Bona fide agency," as used in this clause, means an established commercial or selling agency, maintained by a contractor for the purpose of securing business, that neither exerts nor proposes to exert improper influence to solicit or obtain Government contracts nor holds itself out as being able to obtain any Government contract or contracts through improper influence.

"Bona fide employee," as used in this clause, means a person, employed by a contractor and subject to the contractor's supervision and control as to time, place, and manner of performance, who neither exerts nor proposes to exert improper influence to solicit or obtain Government contracts nor holds out as being able to obtain any Government contract or contracts through improper influence.

"Contingent fee," as used in this clause, means any commission, percentage, brokerage, or other fee that is contingent upon the success that a person or concern has in securing a Government contract.

"Improper influence," as used in this clause, means any influence that induces or tends to induce a Government employee or officer to give consideration or to act regarding a Government contract on any basis other than the merits of the matter. For purposes of this clause, the term "Government" includes "Fermilab."

3. OFFICIALS NOT TO BENEFIT

3.1 No member of Congress or delegate to Congress or Resident Commissioner shall be admitted to any share or part of this subcontract, or to any benefit arising from it. However, this clause does not apply to this subcontract to the extent that this subcontract is made with a corporation for the corporation's general benefit.

4. CONVICT LABOR

4.1 The Subcontractor agrees not to employ any person undergoing sentence of imprisonment except as provided by 18 U.S.C. 4082 (c) (2) and Executive Order 11755, December 29, 1973.

5. FEDERAL, STATE AND LOCAL TAXES

5.1 AS USED IN THIS CLAUSE:

(a) "Contract date," means the date set for bid opening or, if this is a negotiated subcontract or a modification, the effective date of this subcontract or modification.

(b) "All applicable Federal, State, and local taxes and duties," means all taxes and duties, in effect on the subcontract date, that the taxing authority is imposing and collecting on the transactions or property covered by this subcontract.

(c) "After-imposed Federal tax," means any new or increased Federal excise tax or duty, or tax that was exempted or excluded on the subcontract date but whose exemption was later revoked or reduced during the subcontract period, on the transactions or property covered by this subcontract that the Subcontractor is required to pay or bear as the result of legislative, judicial, or administrative action taking effect after the subcontract date. It does not include social security tax or other employment taxes.

(d) "After-relieved Federal tax," means any amount of Federal excise tax or duty, except social security or other employment taxes, that would otherwise have been payable on the transactions or property covered by this subcontract, but which the Subcontractor is not required to pay or bear, or for which the Subcontractor obtains a refund or drawback, as the result of legislative, judicial, or administrative action taking effect after the subcontract date.

5.1.2 The subcontract price includes all applicable Federal, State, and local taxes and duties.

5.1.3 The subcontract price shall be increased by the amount of any after-imposed Federal tax, provided the Subcontractor warrants in writing that no amount for such newly imposed Federal excise tax or duty or rate increase was included in the subcontract price, as a contingency reserve or otherwise.

5.1.4 The subcontract price shall be decreased by the amount of any after-relieved Federal tax.

5.1.5 The subcontract price shall be decreased by the amount of any Federal excise tax or duty, except social security or other employment taxes, that the Subcontractor is required to pay or bear, or does not obtain a refund of, through the Subcontractor's fault, negligence, or failure to follow instructions of Fermilab.

5.1.6 No adjustment shall be made in the subcontract price under this clause unless the amount of the adjustment exceeds $100.

5.1.7 The Subcontractor shall promptly notify Fermilab of all matters relating to any Federal excise tax or duty that reasonably may be expected to result in either an increase or decrease in the subcontract price and shall take appropriate action as Fermilab directs.

5.1.8 Fermilab shall, without liability, furnish evidence appropriate to establish exemption from any Federal, State, or local tax when the Subcontractor requests such evidence and a reasonable basis exists to sustain the exemption.

6. AFFIRMATIVE ACTION FOR SPECIAL DISABLED AND VIETNAM ERA VETERANS

6.1 DEFINITIONS — AS USED IN THIS CLAUSE: "Appropriate office of the State employment service system," means the local office of the Federal-State national system of public employment offices assigned to serve the area where the employment opening is to be filled, including the District of Columbia, Guam, Puerto Rico, Virgin Islands, American Samoa, and the Trust Territory of the Pacific Islands.

"Openings that the Subcontractor proposes to fill from within its own organization," means employment openings for which no one outside the Subcontractor's organization (including any affiliates, subsidiaries, and the parent companies) will be considered and includes any openings that the Subcontractor proposes to fill from regularly established "recall" lists.

"Openings that the Subcontractor proposes to fill under a customary and traditional employer-union hiring arrangement," means employment openings that the Subcontractor proposes to fill from union halls, under their customary and traditional employer-union hiring relationship.

"Suitable employment openings" —

(a) Includes, but is not limited to, openings that occur in jobs categorized as —

(i) Production and nonproduction;

(ii) Plant and office;

(iii) Laborers and mechanics;

(iv) Supervisory and nonsupervisory;

(v) Technical; and

(vi) Executive, administrative, and professional positions compensated on a salary basis of less than $25,000 a year; and

(b) Includes full-time employment, temporary employment of over 3 days, and part-time employment, but not openings that the Subcontractor proposes to fill from within its own organization or under a customary and traditional employer-union hiring arrangement, nor openings in an educational institution that are restricted to students of that institution.

6.2 GENERAL.

(a) Regarding any position for which the employee or applicant for employment is qualified, the Subcontractor shall not discriminate against the individual because the individual is a special disabled or Vietnam Era veteran. The Subcontractor agrees to take affirmative action to employ, advance in employment, and otherwise treat qualified special disabled and Vietnam Era veterans without discrimination based upon their disability or veterans' status in all employment practices such as —

(i) Employment;

(ii) Upgrading;

(iii) Demotion or transfer;

(iv) Recruitment;

(v) Advertising;

(vi) Layoff or termination;

(vii) Rates of pay or other forms of compensation; and

(viii) Selection for training, including apprenticeship.

(b) The Subcontractor agrees to comply with the rules, regulations, and relevant orders of the Secretary of Labor (Secretary) issued under the Vietnam Era Veterans' Readjustment Assistance Act of 1972 (the Act), as amended.

6.3 LISTING OPENINGS.

(a) The Subcontractor agrees to list all suitable employment openings existing at subcontract award or occurring during subcontract performance, at an appropriate office of the State employment service system in the locality where the opening occurs. These openings include those occurring at any Subcontractor facility, including one not connected with performing this subcontract. An independent corporate affiliate is exempt from this requirement.

(b) State and local government agencies holding subcontracts of $10,000 or more shall also list all their suitable openings with the appropriate office of the State employment service.

(c) The listing of suitable employment openings with the State employment service system is required at least concurrently with using any other recruitment source or effort and involves the obligations of placing a bona fide job order, including accepting referrals of veterans and nonveterans. This listing does not require hiring any particular job applicant or hiring from any particular group of job applicants and is not intended to relieve the Subcontractor from any requirements of Executive orders or regulations concerning nondiscrimination in employment.

(d) Whenever the Subcontractor becomes contractually bound to the listing terms of this clause, it shall advise the State employment service system, in each State where it has establishments, of the name and location of each hiring location in the State. As long as the Subcontractor is contractually bound to these terms and has so advised the State system, it need not advise the State system of subsequent subcontracts. The Subcontractor may advise the State system when it is no longer bound by this subcontract clause.

(e) Under the most compelling circumstances, an employment opening may not be suitable for listing, including situations when (i) Fermilab's needs cannot reasonably be supplied, (ii) listing would be contrary to national security, or (iii) the requirement of listing would not be in the Government's interest.

6.4 APPLICABILITY.

(a) This clause does not apply to the listing of employment openings which occur and are filled outside the 50 states, the District of Columbia, Puerto Rico, Guam, Virgin Islands, American Samoa, and the Trust Territory of the Pacific Islands.

(b) The terms of paragraph 6.3(a) above of this clause do not apply to openings that the Subcontractor proposes to fill from within its own organization or under a customary and traditional employer-union hiring arrangement. This exclusion does not apply to a particular opening once an employer decides to consider applicants outside of its own organization or employer-union arrangement for that opening.

6.5 POSTINGS.

(a) The Subcontractor agrees to post employment notices stating (i) the Subcontractor's obligation under the law to take affirmative action to employ and advance in employment qualified special disabled veterans and veterans of the Vietnam era, and (ii) the rights of applicants and employees.

(b) These notices shall be posted in conspicuous places that are available to employees and applicants for employment. They shall be in a form prescribed by the Director, Office of Federal Contract Compliance Programs, Department of Labor (Director), and provided by or through Fermilab.

(c) The Subcontractor shall notify each labor union or representative of workers with which it has a collective bargaining agreement or other subcontract understanding, that the Subcontractor is bound by the terms of the Act, and is committed to take affirmative action to employ, and advance in employment, qualified special disabled and Vietnam Era veterans.

6.6 NONCOMPLIANCE. If the Subcontractor does not comply with the requirements of this clause, appropriate actions may be taken under the rules, regulations, and relevant orders of the Secretary issued pursuant to the Act.

6.7 SUBCONTRACTS. The Subcontractor shall include the terms of this clause in every sub-subcontract or purchase order of $10,000 or more unless exempted by rules, regulations or orders of the Secretary. The Subcontractor shall act as specified by the Director to enforce the terms, including action for noncompliance.

6.8 EMPLOYMENT REPORTS OF SPECIAL DISABLED VETERANS AND VETERANS OF THE VIETNAM ERA.

(a) The Subcontractor agrees to report at least annually, as required by the Secretary of Labor, on:

(i) The number of special disabled veterans and the number of veterans of the Vietnam era in the workforce of the Subcontractor by job category and hiring location; and

(ii) The total number of new employees hired during the period covered by the report, and of that total, the number of special disabled veterans, and the number of veterans of the Vietnam era.

(b) The above items shall be reported by completing the form entitled "Federal Contractor Veterans' Employment Report VETS-100."

(c) Reports shall be submitted no later than March 31 of each year beginning March 31, 1988.

(d) The employment activity report required by paragraph (a)(ii) of this section shall reflect total hires during the most recent 12-month period as of the ending date selected for the employment profile report required by paragraph (a)(i) of this section. Subcontractors may select an ending date: (1) As of the end of any pay period during the period January through March 1st of the year the report is due, or (2) as of December 31, if the Subcontractor has previous written approval from the Equal Employment Opportunity Commission to do so for purposes of submitting the Employer Information Report EEO-1 (Standard Form 100).

(e) The count of veterans reported according to paragraph (a) above shall be based on voluntary disclosure. Each Subcontractor subject to the reporting requirements at 38 U.S.C. 2012(d) shall invite all special disabled veterans and veterans of the Vietnam era who wish to benefit under the affirmative action program at 38 U.S.C. 2012 to identify themselves to the Subcontractor. The invitation shall state that the information is voluntarily provided, that the information will be kept confidential, that disclosure or refusal to provide the information will not subject the applicant or employee to any adverse treatment, and that the information will be used only in accordance with the regulations promulgated under 38 U.S.C. 2012. Nothing in this paragraph (e) shall preclude an employee from informing a Subcontractor at a future time of his or her desire to benefit from this program. Nothing in this paragraph (e) shall relieve a Subcontractor from liability for discrimination under 38 U.S.C. 2012.

7. NOTICE OF LABOR DISPUTES

7.1 If the Subcontractor has knowledge that any actual or potential labor dispute is delaying or threatens to delay the timely performance of this subcontract, the Subcontractor shall immediately give notice, including all relevant information, to Fermilab.

7.2 The Subcontractor agrees to insert the substance of this clause, including this paragraph 7.2, in any sub-subcontract to which a labor dispute may delay the timely performance of this subcontract; except that each sub-subcontract shall provide that in the event its timely performance is delayed or threatened by delay by any actual or potential labor dispute, the Sub-subcontractor shall immediately notify the next higher tier Sub-subcontractor or the Subcontractor, as the case may be, of all relevant information concerning the dispute.

8. UTILIZATION OF SMALL BUSINESS CONCERNS AND SMALL DISADVANTAGED BUSINESS CONCERNS

8.1 It is the policy of the United States, the Department, and Fermilab that small business concerns and small business concerns owned and controlled by socially and economically disadvantaged individuals shall have the maximum practicable opportunity to participate in the performance of subcontracts let by Fermilab.

8.2 The Subcontractor hereby agrees to carry out this policy in the awarding of sub-subcontracts to the fullest extent consistent with the efficient subcontract performance. The Subcontractor further agrees to cooperate in any studies or surveys as may be conducted by the United States Small Business Administration or the Department as may be necessary to determine the extent of the Subcontractor's compliance with this clause.

8.3 As used in this subcontract, the term "small business concern" shall mean a small business as defined pursuant to section 3 of the Small Business Act and relevant regulations promulgated pursuant thereto. The term "small business concern owned and controlled by socially and economically disadvantaged individuals" shall mean a small business concern:

(a) which is at least 51 per centum owned by one or more socially and economically disadvantaged individuals; or in the case of any publicly-owned business, at least 51 per centum of the stock of which is owned by one or more socially and economically disadvantaged individuals; and

(b) whose management and daily business operations are controlled by one or more of such individuals.

The Subcontractor shall presume that socially and economically disadvantaged individuals include Black Americans, Hispanic Americans, Native Americans, Asian-Pacific Americans, Asian-Indian Americans, and other minorities, or any other individual found to be disadvantaged by the Administration pursuant to section 8(a) of the Small Business Act.

8.4 Subcontractors acting in good faith may rely on written representations by their Sub-subcontractors regarding their status as either a small business concern or a small business concern owned and controlled by socially and economically disadvantaged individuals.

9. ASSIGNMENT

9.1 Neither this subcontract nor any interest therein nor claim thereunder shall be assigned or transferred by the Subcontractor except as expressly authorized in writing by Fermilab. Fermilab may assign the whole or any part of this subcontract to the Government or its designee and in such event this subcontract shall continue in full force and effect.

10. EXAMINATION OF RECORDS BY COMPTROLLER GENERAL

10.1 This clause applies if this subcontract exceeds $10,000 and was entered into by negotiation.

10.2 The Comptroller General of the United States or a duly authorized representative from the General Accounting Office shall, until 3 years after final payment under this subcontract or for any shorter period specified in Federal Acquisition Regulation (FAR) Subpart 4.7, Contractor Records Retention, have access to and the right to examine any of the Subcontractor's directly pertinent books, documents, papers, or other records involving transactions related to this subcontract.

10.3 The Subcontractor agrees to include in first-tier subcontracts under this subcontract a clause to the effect that the Comptroller General or a duly authorized representative from the General Accounting Office shall, until 3 years after final payment under the sub-subcontract or for any shorter period specified in FAR Subpart 4.7, have access to and the right to examine any of the Sub-subcontractor's directly pertinent books, documents, papers, or other records involving transactions related to the sub-subcontract. "Sub-subcontract," as used in this clause, excludes (1) purchase orders not exceeding $10,000 and (2) sub-subcontracts or purchase orders for public utility services at rates established to apply uniformly to the public, plus any applicable reasonable connection charge.

10.4 The periods of access and examination in paragraphs 10.2 and 10.3 above for records relating to (1) litigation or settlement of claims arising from the performance of this subcontract, or (2) costs and expenses of this subcontract to which the Comptroller General or a duly authorized representative from the General Accounting Office has taken exception shall continue until such appeals, litigation, claims, or exceptions are disposed of.

11. EQUAL OPPORTUNITY

11.1 If, during any 12-month period (including the 12 months preceding the award of this subcontract), the Subcontractor has been or is awarded nonexempt Federal contracts and/or subcontracts that have an aggregate value in excess of $10,000, the Subcontractor shall comply with subparagraphs 11.2 (a) thru (k) below. Upon request, the Subcontractor shall provide information necessary to determine the applicability of this clause.

11.2 During the performance of this subcontract, the Subcontractor agrees as follows:

(a) The Subcontractor shall not discriminate against any employee or applicant for employment because of race, color, religion, sex, or national origin.

(b) The Subcontractor shall take affirmative action to ensure that applicants are employed and that employees are treated during employment, without regard to their race, color, religion, sex, or national origin. This shall include, but not be limited to:

(i) Employment

(ii) Upgrading;

(iii) Demotion;

(iv) Transfer;

(v) Recruitment or recruitment advertising;

(vi) Layoff or termination;

(vii) Rates of pay or other forms of compensation; and

(viii) Selection for training, including apprenticeship.

(c) The Subcontractor shall post in conspicuous places available to employees and applicants for employment notices to be provided by Fermilab that explain this clause.

(d) The Subcontractor shall, in all solicitations or advertisement for employees placed by or on behalf of the Subcontractor, state that all qualified applicants will receive consideration for employment without regard to race, color, religion, sex, or national origin.

(e) The Subcontractor shall send to each labor union or representative of workers with which he has a collective bargaining agreement or other contract or understanding, the notice, to be provided by Fermilab, advising the labor union or workers representative of the Subcontractor's commitments under this clause, and post copies of the notice in conspicuous places available to employees and applicants for employment.

(f) The Subcontractor shall comply with Executive Order No. 11246 as amended, and the rules, regulations, and orders of the Secretary of Labor.

(g) The Subcontractor shall furnish to Fermilab all information required by Executive Order No. 11246, as amended, and by the rules, regulations, and orders of the Secretary of Labor. Standard Form 100 (EEO-1), or any successor form, is the prescribed form to be filed within 30 days following the award, unless filed within 12 months preceding the date of award.

(h) The Subcontractor shall permit access to its books, records, and accounts by the Department, Fermilab or the Office of Federal Contract Compliance Programs (OFCCP) for the purposes of investigation to ascertain compliance with such rules, regulations, and orders.

(i) If the OFCCP determines that the Subcontractor is not in compliance with this clause or any rule, regulation, or order of the Secretary of Labor, this subcontract may be cancelled, terminated, or suspended, in whole or in part, and the Subcontractor may be declared ineligible for further Fermilab or Government contracts under the procedures authorized in Executive Order No. 11246, as amended. In addition, sanctions may be imposed and remedies invoked against the Subcontractor as provided in Executive Order No. 11246, as amended, the rules, regulations, or orders of the Secretary of Labor, or as otherwise provided by law.

(j) The Subcontractor will include the provisions of paragraph 11.2(a) through (k) in every sub-subcontract

or purchase order that is not exempted by the rules, regulations or orders of the Secretary of Labor issued under Executive Order No. 11246, as amended, so that these terms and conditions will be binding upon each Sub-subcontractor or vendor.

(k) The Subcontractor shall take such action with respect to any sub-subcontract or purchase order as the Government through Fermilab, may direct as a means of enforcing these terms and conditions including sanctions for noncompliance; *Provided,* that if the Subcontractor becomes involved in, or is threatened with litigation with a Sub-subcontractor or vendor as a result of such direction, the Subcontractor may request the United States to enter into such litigation to protect the interests of the United States.

11.3 Notwithstanding any other clause in this subcontract, disputes relative to this clause will be governed by the procedures in 41 CFR 60-1.1.

12. PRIORITIES, ALLOCATIONS, AND ALLOTMENTS

The Subcontractor shall follow the provisions of Defense Materials System Regulation 1 or Defense Priorities System Regulation 1 (see 32A CFR 621-662) and all other applicable regulations and orders of the Office of Industrial Resource Administration, Department of Commerce, in obtaining controlled materials and other products and materials needed to fill this order.

13. AFFIRMATIVE ACTION FOR HANDICAPPED WORKERS

13.1 GENERAL:

(1) Regarding any position for which the employee or applicant for employment is qualified, the Subcontractor shall not discriminate against any employee or applicant because of physical or mental handicap. The Subcontractor agrees to take affirmative action to employ, advance in employment, and otherwise treat qualified handicapped individuals without discrimination based upon their physical or mental handicap in all employment practices such as —

(i) Employment;
(ii) Upgrading;
(iii) Demotion or transfer;
(iv) Recruitment;
(v) Advertising;
(vi) Layoff or termination;
(vii) Rates of pay or other forms of compensation; and
(viii) Selection for training, including apprenticeship.

(2) The Subcontractor agrees to comply with the rules, regulations, and relevant orders of the Secretary of Labor (Secretary) issued under the Rehabilitation Act of 1973 (29 U.S.C. 793) (the Act), as amended.

13.2 POSTINGS.

(1) The Subcontractor agrees to post employment notices stating (1) the Subcontractor's obligation under the law to take affirmative action to employ and advance in employment qualified handicapped individuals and (ii) the rights of applicants and employees.

(2) These notices shall be posted in conspicuous places that are available to employees and applicants for employment. They shall be in a form prescribed by the Director, Office of Federal Contract Compliance Programs, Department of Labor (Director), and provided by or through Fermilab.

(3) The Subcontractor shall notify each labor union or representative of workers with which it has a collective bargaining agreement or other contract understanding, that the Subcontractor is bound by the terms of Section 503 of the Act and is committed to take affirmative action to employ, and advance in employment, qualified physically and mentally handicapped individuals.

13.3 NONCOMPLIANCE. If the Subcontractor does not comply with the requirements of this clause, appropriate actions may be taken under the rules, regulations, and relevant orders of the Secretary issued pursuant to the Act.

13.4 SUB-SUBCONTRACTS. The Subcontractor shall include the terms of this clause in every sub-subcontract or purchase order in excess of $2,500 unless exempted by rules, regulations, or orders of the Secretary. The Subcontractor shall act as specified by the Director to enforce the terms, including action for noncompliance.

14. MODIFICATION PROPOSALS — PRICE BREAKDOWN

14.1 The Subcontractor, in connection with any proposal he makes for a subcontract modification, shall furnish a price breakdown, itemized as required by Fermilab. Unless otherwise directed, the breakdown shall be in sufficient detail to permit an analysis of all material, labor, equipment, sub-subcontract, and overhead costs, as well as profit, and shall cover all work involved in the modification, whether such work was deleted, added or changed. Any amount claimed for sub-subcontracts shall be supported by a similar price breakdown. In addition, if the proposal includes a time extension, a justification therefor shall also be furnished. The justification shall be furnished by the date specified by Fermilab.

14.2 When costs are a factor in any determination of a subcontract price adjustment under any clause of this subcontract, such costs shall be in accordance with the contract cost principles and procedures in part 31.2 of the Federal Acquisition Regulations (48 CFR 1-31.2) and Subpart 931.2 of the Department's Acquisition Regulations in effect on the date of this subcontract.

15. UTILIZATION OF WOMEN-OWNED SMALL BUSINESS

15.1 AS USED IN THIS CLAUSE: "Women-owned small businesses," means businesses that are at least 51 percent owned by women who are United States citizens and who also control and operate the business.

"Control," means exercising the power to make policy decisions.

"Operate," means being actively involved in the day-to-day management of the business.

15.2 It is the policy of the United States Government and Fermilab that women-owned small businesses shall have the maximum practicable opportunity to participate in the performance of subcontracts awarded by Fermilab.

15.3 The Subcontractor agrees to use its best efforts to give women-owned small businesses the maximum practicable opportunity to participate in the subcontracts it awards to the fullest extent consistent with the efficient performance of its subcontract.

16. UTILIZATION OF LABOR SURPLUS AREA CONCERNS

16.1 POLICY. It is the policy of Fermilab to award subcontracts to concerns that agree to perform substantially in labor surplus areas (LSA's), when this can be done consistent with the efficient performance of the subcontract and at prices

no higher than are obtainable elsewhere. The Subcontractor agrees to use its best efforts to place its sub-subcontracts in accordance with this policy.

16.2 ORDER OF PREFERENCE. In complying with paragraph 16.1 of this clause and with clause 8, "Utilization of Small Business Concerns and Small Disadvantaged Business Concerns" of these General Provisions, the Subcontractor shall observe the following order of preference in awarding sub-subcontracts: (a) Small business concerns that are LSA concerns, (b) other small business concerns, and (c) other LSA concerns.

16.3 DEFINITIONS — AS USED IN THIS CLAUSE:

(a) Labor surplus area means a geographical area identified by the Department of Labor in accordance with 20 CFR 654, Subpart A, as an area of concentrated unemployment or underemployment or an area of labor surplus.

(b) Labor surplus area concern means a concern that together with its first-tier Subcontractors will perform substantially in labor surplus areas. Performance is substantially in labor surplus areas if the costs incurred under the contract on account of manufacturing, production, or performance of appropriate services in labor surplus areas exceed 50 percent of the contract price.

17. FERMILAB-FURNISHED PROPERTY

17.1 FERMILAB PROPERTY.

(a) Fermilab shall deliver to the Subcontractor, for use in connection with and under the terms of this subcontract, the Fermilab-furnished property described elsewhere in the subcontract together with any related data and information that the Subcontractor may request and is reasonably required for the intended use of the property (hereinafter referred to as "Fermilab-furnished property").

(b) The delivery or performance dates for this subcontract are based upon the expectation that Fermilab-furnished property suitable for use will be delivered to the Subcontractor at the times stated elsewhere in the subcontract or, if not so stated, in sufficient time to enable the Subcontractor to meet the subcontract's delivery or performance dates.

(c) If Fermilab-furnished property is received by the Subcontractor in a condition not suitable for the intended use, the Subcontractor shall, upon receipt of it, notify Fermilab, detailing the facts, and, as directed by Fermilab and at Fermilab expense, either repair, modify, return, or otherwise dispose of the property. After completing the directed action and upon written request of the Subcontractor, Fermilab shall make an equitable adjustment as provided in paragraph 17.8 of this clause.

(d) If Fermilab-furnished property is not delivered to the Subcontractor by the required time, Fermilab shall, upon the Subcontractor's timely written request, make a determination of the delay, if any, caused the Subcontractor and shall make an equitable adjustment in accordance with paragraph 17.8 of this clause.

17.2 CHANGES IN FERMILAB-FURNISHED PROPERTY.

(a) Fermilab may, by written notice,

(i) decrease the Fermilab-furnished property provided or to be provided under this subcontract, or

(ii) substitute other Fermilab-furnished property for the property to be provided by Fermilab, or to be acquired by the Subcontractor for Fermilab, under this subcontract. The Subcontractor shall promptly take such action as Fermilab may direct regarding the removal, shipment, or disposal of the property covered by such notice.

(b) Upon the Subcontractor's written request, Fermilab shall make an equitable adjustment to the subcontract in accordance with paragraph 17.8 of this clause, if Fermilab has agreed in the subcontract to make the property available for performing this subcontract and there is any —

(i) Decrease or substitution in this property pursuant to subparagraph 17.2(a) above; or

(ii) Withdrawal of authority to use this property, if provided under any other contract or lease.

17.3 TITLE IN GOVERNMENT PROPERTY.

(a) The Government shall retain title to all Fermilab-furnished property.

(b) All Fermilab-furnished property and all property acquired by the Subcontractor, title to which vests in the Government under this paragraph (collectively referred to as "Fermilab property"), are subject to the provisions of this clause. Title to Fermilab-furnished property shall not be affected by its incorporation into or attachment to any property not owned by Fermilab, nor shall Fermilab-furnished property become a fixture or lose its identity as personal property by being attached to any real property.

(c) Title to each item of facilities, special test equipment, and special tooling (other than that subject to a special tooling clause) acquired by the Subcontractor for Fermilab under this subcontract shall pass to and vest in the Government when its use in performing this subcontract commences or when Fermilab has paid for it, whichever is earlier, whether or not title previously vested in the Government.

(d) If this subcontract contains a provision directing the Subcontractor to purchase material for which Fermilab will reimburse the Subcontractor as a direct item of cost under this subcontract —

(i) Title to material purchased from a vendor shall pass to and vest in the Government upon the vendor's delivery of such material; and

(ii) Title to all other material shall pass to and vest in the Government upon —

a) Issuance of the material for use in subcontract performance;

b) Commencement of processing of the material or its use in subcontract performance; or

c) Reimbursement of the cost of the material by Fermilab, whichever occurs first.

17.4 USE OF FERMILAB-FURNISHED PROPERTY. The Fermilab-furnished property shall be used only for performing this subcontract, unless otherwise provided in this subcontract or approved by Fermilab.

17.5 PROPERTY ADMINISTRATION.

(a) The Subcontractor shall be responsible and accountable for all Fermilab-furnished property provided under this subcontract and shall comply with Federal Acquisition Regulation (FAR) Subpart 45.4, as in effect on the date of this subcontract.

(b) The Subcontractor shall establish and maintain a program for the use, maintenance, repair, protection, and preservation of Fermilab-furnished property in accordance with sound industrial practice and the applicable provisions of Subpart 45.5 of the FAR.

(c) If damage occurs to Fermilab-furnished property, the risk of which has been assumed by Fermilab under this subcontract, Fermilab shall replace the items or the

Subcontractor shall make such repairs as Fermilab directs. However, if Subcontractor cannot effect such repairs within the time required, the Subcontractor shall dispose of the property as directed by Fermilab. When any property for which Fermilab is responsbile is replaced or repaired, Fermilab shall make an equitable adjustment in accordance with paragraph 17.8 of this clause.

(d) The Subcontractor represents that the subcontract price does not include any amount for repairs or replacement for which Fermilab is responsible. Repair or replacement of property for which the Subcontractor is responsible shall be accomplished by the Subcontractor at its own expense.

17.6 ACCESS. Fermilab and all its designees shall have access at all reasonable times to the premises in which any Fermilab-furnished property is located for the purpose of inspecting the Fermilab-furnished property.

17.7 RISK OF LOSS. Unless otherwise provided in this subcontract, the Subcontractor assumes the risk of, and shall be responsible for, any loss or destruction of, or damage to, Fermilab-furnished property upon its delivery to the Subcontractor or upon passage of title to the Government under paragraph 17.3 of this clause. However, the Subcontractor is not responsible for reasonable wear and tear to Fermilab-furnished property or for Fermilab-furnished property properly consumed in performing this subcontract.

17.8 EQUITABLE ADJUSTMENT. When this clause specifies an equitable adjustment, it shall be made to any affected subcontract provision in accordance with the procedures of the Changes clause. When appropriate, Fermilab may initiate an equitable adjustment in favor of Fermilab. The right to an equitable adjustment shall be the Subcontractor's exclusive remedy. Fermilab shall not be liable to suit for breach of subcontract for —

(i) Any delay in delivery of Fermilab-furnished property;

(ii) Delivery of Fermilab-furnished property in a condition not suitable for its intended use;

(iii) A decrease in or substitution of Fermilab-furnished property; or

(iv) Failure to repair or replace Fermilab-furnished property for which Fermilab is responsible.

17.9 FINAL ACCOUNTING AND DISPOSITION OF FERMILAB-FURNISHED PROPERTY. Upon completing this subcontract, or at such earlier dates as may be fixed by Fermilab, the Subcontractor shall submit, in a form acceptable to Fermilab, inventory schedules covering all items of Fermilab-furnished property (including any resulting scrap) not consumed in performing this subcontract or delivered to Fermilab. The Subcontractor shall prepare for shipment, deliver f.o.b. origin, or dispose of the Fermilab-furnished property as may be directed or authorized by Fermilab. The net proceeds of any such disposal shall be credited to the subcontract price or shall be paid to Fermilab as it directs.

17.10 ABANDONMENT AND RESTORATION OF SUBCONTRACTOR'S PREMISES. Unless otherwise provided herein, Fermilab —

(a) May abandon any Fermilab-furnished property in place, at which time all obligations of Fermilab regarding such abandoned property shall cease; and

(b) Has no obligation to restore or rehabilitate the Subcontractor's premises under any circumstances (e.g., abandonment, disposition upon completion of need, or upon contract completion). However, if Fermilab-furnished property is withdrawn or is unsuitable for the intended use, or if other Fermilab-furnished property is substituted, then the equitable adjustment under paragraph 17.8 of this clause may properly include restoration or rehabilitation costs.

17.11 COMMUNICATIONS. All communications under this clause shall be in writing.

18. INDEPENDENT CONTRACTOR

In all respects pertaining to this subcontract the subcontractor is, and shall act as an independent subcontractor and the subcontractor shall not be or act as the agent, employee or servant of Fermilab or the Government.

Without limiting the generality of the foregoing it is understood and agreed:

(1) that all persons employed by the subcontractor in the performance of this agreement shall be employees of the subcontractor and not employees of Fermilab or the Government, and

(2) that the subcontractor shall not enter into any contract with a third party which purports to obligate or bind Fermilab or the Government.

19. CERTIFIED COST OR PRICING DATA

19.1 (a) The Subcontractor shall require under the situations described in (b) below, unless exempted under the exceptions set forth in (c) below, each sub-subcontractor under this subcontract to submit cost or pricing data and to certify that, to the best of his knowledge and belief, such cost or pricing data are accurate, complete, and current.

(b) Except as provided in (c) below, certified cost or pricing data shall be submitted prior to

(i) the award of each sub-subcontract, the price of which is expected to exceed $100,000 and

(ii) the negotiation of the price of each change or modification to a sub-subcontract under this subcontract for which the price adjustment is expected to exceed $100,000.

(c) Certified cost or pricing data need not be furnished pursuant to this clause where:

(i) the subcontractor has not been required to furnish cost or pricing data; or

(ii) the price adjustment is based on adequate price competition, established catalog or market prices of commercial items sold in substantial quantities to the general public, or the prices are set by law or regulation; and the Subcontractor states in writing the basis for applying this exception.

(d) In submitting the cost or pricing data, the sub-subcontractor shall use the form of certificate set forth in paragraph 19.2 below and shall certify that the data are accurate, complete, and current. Such certificate and data (actual or identified, as provided in the certificate prescribed below) shall be submitted by sub-subcontractors to the next higher-tier sub-subcontractor, or the Subcontractor, as applicable, for retention.

19.2 The certificates required by this clause shall be in the form set forth below:

SUBCONTRACTOR'S CERTIFICATE OF CURRENT COST OR PRICING DATA

This is to certify that, to the best of my knowledge and belief, cost or pricing data submitted in writing, or specifically identified in writing if actual submission of the data is impracticable (see FAR 15.804-6), to Fermilab in support of _____

are accurate, complete, and current as of _____.
(date)

(This date shall be as close as practicable to the date when the price negotiations were concluded and the subcontract price was agreed to.)

FIRM _____

NAME _____

TITLE _____

_____
(Date of Execution)

19.3 For purposes of verifying that certified cost or pricing data submitted in conjunction with the negotiation of this subcontract or any subcontract change or other modification involving an amount in excess of $100,000 were accurate, complete, and current, Fermilab, the Department or any of its authorized representatives shall until the expiration of three (3) years from the date of final payment under this subcontract, have the right to examine those books, records, documents, papers, and other supporting data which involve transactions related to this subcontract or which will permit adequate evaluation of the cost or pricing data submitted, along with the computations and projections used therein.

19.4 If the original price of this subcontract exceeds $100,000 or the price of any change or other modification to this subcontract is expected to exceed $100,000, the Subcontractor agrees to furnish Fermilab certified cost or pricing data, using the certificate set forth in paragraph 19.2 unless the price is based on adequate price competition, established catalog or market prices of commercial items sold in substantial quantities to the general public, or prices set by law or regulation.

19.5 The requirement for submission of certified cost or pricing data with respect to any change or other modification does not apply to any sub-subcontract change or other modification, at any tier, where the subcontract is firm fixed-price or fixed-price with escalation unless such change or other modification results from a change or modification to the subcontract, nor does it apply to a sub-subcontract change or modification, at any tier, where the subcontract is not firm fixed-price or fixed-price with escalation, unless the price for such change or other modification becomes reimbursable under the subcontract.

19.6 The Subcontractor agrees to insert paragraph 19.3 without change and the substance of paragraphs 19.1, 19.2, 19.4, 19.5, and 19.6 of this clause in each sub-subcontract hereunder in excess of $100,000 and in each sub-subcontract of $100,000 or less at the time of making a change or other modification thereto in excess of $100,000.

19.7 If Fermilab determines that any price, including profit or fee, negotiated in connection with this subcontract or any cost reimbursable under this subcontract was increased by any significant sums because the Subcontractor, or any sub-subcontractor pursuant to this clause or any sub-subcontract clause herein required, furnished incomplete or inaccurate cost or pricing data or data not current as certified in the Subcontractor's certificate of current cost or pricing data, then such price or cost shall be reduced accordingly and the subcontract shall be modified in writing to reflect such reduction.

NOTE: Since the subcontract is subject to reduction under this clause by reason of defective cost or pricing data submitted in connection with certain sub-subcontracts, it is expected that the Subcontractor may wish to include a clause in each such sub-subcontract requiring the sub-subcontractor to appropriately indemnify the Subcontractor. It is also expected that any sub-subcontractor subject to such indemnification will generally require substantially similar indemnification for defective cost or pricing data required to be submitted by his lower-tier sub-subcontractors.

20. RESTRICTIONS ON SUB-SUBCONTRACTOR SALES TO THE GOVERNMENT

20.1 The Subcontractor shall not enter into any agreement with an actual or prospective sub-subcontractor, nor otherwise act in any manner, which has or may have the effect of restricting sales by such sub-subcontractors directly to the Government of any item or process (including computer software) made or furnished by the sub-subcontractor under this subcontract or under any follow-on production subcontract.

20.2 The prohibition in 20.1 above does not preclude the Subcontractor from asserting rights that are otherwise authorized by law or regulation.

20.3 The Subcontractor agrees to incorporate the substance of this clause, including this paragraph 20.3, in all sub-subcontracts under this subcontract.

21. ANTI-KICKBACK PROCEDURES

21.1 Definitions: "Kickback," as used in this clause, means any money, fee, commission, credit, gift, gratuity, thing of value, or compensation of any kind which is provided, directly or indirectly, to any prime Contractor, prime Contractor employee, Subcontractor, or Subcontractor employee for the purpose of improperly obtaining or rewarding favorable treatment in connection with a prime contract or in connection with a subcontract relating to a prime contract.

"Person," as used in this clause, means a corporation, partnership, business association of any kind, trust, joint-stock company, or individual.

"Prime Contract," as used in this clause, means a contract or contractual action entered into by the United States for the purpose of obtaining supplies, materials, equipment, or services of any kind.

"Prime Contractor employee," as used in this clause, means any officer, partner, employee, or agent of a prime Contractor.

"Subcontract," as used in this clause, means a contract or contractual action entered into by a prime Contractor or Subcontractor for the purpose of obtaining supplies, materials, equipment, or services of any kind under a prime contract.

"Subcontractor," as used in this clause, (1) means any person, other than the prime Contractor, who offers to furnish or furnishes any supplies, materials, equipment, or services of any kind under a prime contract or subcontract entered into in connection with such prime contract, and (2) includes any person who offers to furnish or furnishes general supplies to the prime Contractor or a higher tier subcontractor.

"Subcontractor employee, " as used in this clause, means any officer, partner, employee, or agent of a Subcontractor.

21.2 The Anti-Kickback Act of 1986 (41 U.S.C. 51-58) (the Act), prohibits any person from —

(a) Providing or attempting to provide or offering to provide any kickback;

(b) Soliciting, accepting, or attempting to accept any kickback; or

(c) Including, directly or indirectly, the amount of any kickback in the contract price charged by a prime Contractor to the United States or in the contract price charged by a Subcontractor to a prime Contractor or higher tier Subcontractor.

21.3 (a) The Subcontractor shall have in place and follow reasonable procedures designed to prevent and detect possible violations described in paragraph (b) of this clause in its own operations and direct business relationships.

(b) When the Subcontractor has reasonable grounds to believe that a violation described in paragraph (b) of this clause may have occurred, the Subcontractor shall promptly report in writing the possible violation. Such reports shall be made to the inspector general of the contracting agency, the head of the contracting agency if the the agency does not have an inspector general, or the Department of Justice.

(c) The Subcontractor shall cooperate fully with any Federal agency investigating a possible violation described in paragraph (b) of this clause.

(d) Regardless of the contract tier at which a kickback was provided, accepted, or charged under the Subcontract in violation of paragraph (b) of this clause, the Contracting Officer may —

(i) Offset the amount of the kickback against any monies owed by the United States under this contract and/or

(ii) Direct that the Subcontractor withhold from sums owed the sub-subcontractor, the amount of the kickback. The Contracting Officer may order that monies withheld under subdivision 21.3(d)(i) of this clause be paid over to the Government unless the Government has already offset those monies under subdivision 21.3(d)(i) of this clause. In the latter case, the Subcontractor shall notify the Contracting Officer when the monies are withheld.

(e) The Subcontractor agrees to incorporate the substance of this clause, including this subparagraph 21.3(e), in all sub-subcontracts under the subcontract.

22. CONTRACT WORK HOURS AND SAFETY STANDARDS ACT—OVERTIME COMPENSATION

22.1 This subcontract, to the extent that it is of a character specified in the Contract Work Hours and Safety Standards Act (40 U.S.C. 327-333) (the Act), is subject to the following terms and all other applicable provisions and exceptions of the Act and the regulations of the Secretary of Labor.

22.2 OVERTIME REQUIREMENTS. No Subcontractor or sub-subcontractor contracting for any part of the subcontract work which may require or involve the employment of laborers or mechanics (see Federal Acquisition Regulation (FAR) 22.300) shall require or permit any such laborers or mechanics in any workweek in which the individual is employed on such work to work in excess of 40 hours in such workweek unless such laborer or mechanic receives compensation at a rate not less than 1½ times the basic rate of pay for all hours worked in excess of 40 hours in such workweek.

22.3 VIOLATION, LIABILITY FOR UNPAID WAGES, AND LIQUIDATED DAMAGES. In the event of any violation of the provisions set forth in paragraph 22.2 of this clause, the Subcontractor and any sub-subcontractor responsible therefore shall be liable for the unpaid wages. In addition, such Subcontractor and sub-subcontractor shall be liable to the United States (in the case of work done under contract for the District of Columbia or a territory, to such District or to such territory), for liquidated damages. Such liquidated damages shall be computed with respect to each individual laborer or mechanic employed in violation of the provisions set forth in paragraph 22.2 of this clause in the sum of $10 for each calendar day on which such individual was required or permitted to work in excess of the standard workweek of 40 hours without payment of the overtime wages required by provision set forth in paragraph 22.2 of this clause.

22.4 WITHHOLDING FOR UNPAID WAGES AND LIQUIDATED DAMAGES. Fermilab shall upon its action or upon written request of an authorized representative of the Department of Labor withhold or cause to be withheld, from any monies payable on account of work performed by the Subcontractor or sub-subcontractor under any such subcontract or any other Federal subcontract with the same Prime Contractor, or any other Federally-assisted subcontract subject to the Contract Work Hours and Safety Standards Act which is held by the same Prime Contractor, such sums as may be determined to be necessary to satisfy any liabilities of such Subcontractor or sub-subcontractor for unpaid wages and liquidated damages as provided in the provisions set forth in paragraph 22.3 of this clause.

22.5 PAYROLLS AND BASIC RECORDS.

(a) The Subcontractor and sub-subcontractor shall maintain payrolls and basic payroll records during the course of subcontract work and shall preserve them for a period of 3 years from the completion of the subcontract for all laborers and mechanics working on the subcontract. Such records shall contain the name and address of each such employee, social security number, correct classifications, hourly rates of wages paid, daily and weekly number of hours worked, deductions made, and actual wages paid. Nothing in this paragraph shall require the duplication of records required to be maintained for construction work by Department of Labor regulations at 29 CFR 5.5(a)(3) implementing the Davis-Bacon Act.

(b) The records to be maintained under paragraph 22.5(a) of this clause shall be made available by the Subcontractor or sub-subcontractor for inspection, copying, or transcription by authorized representatives of Fermilab or the Department of Labor. The Subcontractor or sub-subcontractor shall permit such representatives to interview employees during working hours on the job.

22.6 SUB-SUBCONTRACTS. The Subcontractor or sub-subcontractor shall insert in any sub-subcontracts the provisions set forth in paragraphs 22.2 through 22.6 of this clause and also a clause requiring the sub-subcontractors to include these provisions in any lower tier sub-subcontracts. Fermilab shall be responsible for compliance by any sub-subcontractor or lower tier sub-subcontractor with the provisions set forth in paragraphs 22.2 through 22.6 of this clause.

23. PREFERENCE FOR U.S. FLAG AIR CARRIERS

23.1 "International air transportation," as used in this clause, means transportation by air between a place in the United States and a place outside the United States or between two places both of which are outside the United States.

"United States," as used in this clause, means the 50 States, the District of Columbia, the Commonwealth of Puerto Rico, and possessions of the United States.

"U.S. Flag air carrier," as used in this clause, means an air carrier holding a certificate under section 401 of the Federal Aviation Act of 1958 (49 U.S.C. 1371).

23.2 Section 5 of the International Air Transportation Fare Competitive Practices Act of 1974 (49 U.S.C. 1571) (Fly America Act) requires that all Federal agencies and Government contractors and Subcontractors use U.S. flag air carriers for U.S. Government-financed international air transportation of personnel (and their personal effects) or property, to the extent that service by those carriers is available. It requires the Comptroller General of the United States, in the absence of satisfactory proof of the necessity for foreign-flag air transportation, to disallow expenditures from funds, appropriated or otherwise established for the account of the United States, for international air transportation secured aboard a foreign-flag air carrier if a U.S. flag air carrier is available to provide such services.

23.3 The Subcontractor agrees, in performing work under this subcontract, to use U.S. flag air carriers for international air transportation of personnel (and their personal effects) or property to the extent that service by those carriers is available.

23.4 In the event that the Subcontractor selects a carrier other than a U.S. flag air carrier for international air transportation, the Subcontractor shall include a certification on vouchers involving such transportation essentially as follows:

CERTIFICATION OF UNAVAILABILITY OF
U.S. FLAG AIR CARRIERS

I hereby certify that international air transportation of persons (and their personal effects) or property by U.S. flag air carrier was not available or it was necessary to use foreign-flag air carrier service for the following reasons (see section 47.403 of the Federal Acquisition Regulation):
(State reasons): _____

(End of Certification)

23.5 The Subcontractor shall include the substance of this Paragraph, including this subparagraph 23.5, in each sub-subcontract or purchase order under this subcontract that may involve international air transportation.

24. LIMITATIONS ON SUBCONTRACTING

24.1 This clause applies if this subcontract was awarded as a result of a partial or total set aside for small business.

24.2 By submission of an offer and execution of a subcontract, the Offeror/Subcontractor agrees that in performance of the subcontract in the case of a subcontract for:

(a) Services (except construction). At least 50 percent of the cost of subcontract performance incurred for personnel shall be expended for employees of the concern.

(b) Supplies (other than procurement from a regular dealer in such supplies). The concern shall perform work for at least 50 percent of the cost of manufacturing the supplies, not including the cost of materials.

(c) General construction. The concern will perform at least 15 percent of the cost of the subcontract, not including the cost of materials with its own employees.

(d) Construction by special trade contractors. The concern will perform at least 25 percent of the cost of the subcontract, not including the cost of materials with its own employees.

ADDENDUM I TO FL-1

1. DEFINITIONS

As used throughout this Addendum, the following terms shall have the meanings set forth below:

a) The words "contract" or "contractor" shall mean "subcontract" or "subcontractor."

b) The words "subcontract" or "subcontractor" shall mean "sub-subcontract" or "sub-subcontractor."

2. AUTHORIZATION AND CONSENT

The Government has given its authorization and consent (without prejudice to any rights of indemnification) for all use and manufacture, in the performance of this contract or any part hereof or any amendment hereto or any subcontract hereunder (including any lower-tier subcontract), of any invention described in and covered by a patent of the United States (i) embodied in the structure or composition of any article the delivery of which is accepted by the Government or Fermilab under this contract or (ii) utilized in the machinery, tools or methods the use of which necessarily results from compliance by the Contractor or the using subcontractor with (a) specifications or written provisions now or hereafter forming a part of this contract, or (b) specific written instructions given by Fermilab or the Government directing the manner of performance. The entire liability to the Government for infringement of a patent of the United States shall be determined solely by the provisions of the indemnity clauses, if any, included in this contract or any subcontract hereunder (including any lower-tier subcontract), and the Government assumes liability for all other infringement to the extent of the authorization and consent hereinabove granted.

3. NOTICE AND ASSISTANCE REGARDING PATENT AND COPYRIGHT INFRINGEMENT

The provisions of this clause shall be applicable only if the amount of this contract exceeds $10,000.

a) The Contractor shall report to the Government via Fermilab, promptly and in reasonable written detail, each notice or claim of patent or copyright infringement based on the performance of this contract of which the Contractor has knowledge.

b) In the event of any claim or suit against the Government on account of any alleged patent or copyright infringement arising out of the performance of this contract or out of the use of any supplies furnished or work or services performed hereunder, the Contractor shall furnish to the Government when requested by the Government or Fermilab all evidence and information in possession of the Contractor pertaining to such suit or claim. Such evidence and information shall be furnished at the expense of the Government except where the Contractor has agreed to indemnify the Government or Fermilab.

c) This clause shall be included in all subcontracts.

4. REPORTING OF ROYALTIES

If this contract is in an amount which exceeds $10,000 and if any royalty payments are directly involved in the contract or are reflected in the contract price to the Government, the contractor agrees to report in writing to the Government via Fermilab during the performance of this contract and prior to its completion or final settlement the amount of any royalties or other payments paid or to be paid by it directly to others in connection with the performance of this contract together with the names and addresses of licensors to whom such payments are made and either the patent numbers involved or such other information as will permit identification of the patents or other basis on which the royalties are to be paid. The approval of DOE or Fermilab of any individual payments or royalties shall not stop the Government at any time from contesting the enforceability, validity or scope of, or title to, any patent under which a royalty or payments are made.

5. PATENT INDEMNITY

If the amount of this contract is in excess of $10,000, the Contractor shall indemnify the Government, Fermilab, their officers, agents, and employees against liability, including costs, for infringement of any United States letter patent (except letters patent issued upon an application which is now or may hereafter be kept secret or otherwise withheld from issue by order of the Government) arising out of the manufacture or delivery of supplies or out of construction, alteration, modification, or repair of real property (hereinafter referred to as "construction work") under this contract, or out of the use of disposal by or for the account of the Government of such supplies or construction work. The foregoing indemnity shall not apply unless the Contractor shall have been informed as soon as practicable by the Government of the suit or action alleging such infringement, and shall have been given such opportunity as is afforded by applicable laws, rules, or regulations to participate in the defense thereof; and further, such indemnity shall not apply to:

a) An infringement resulting from compliance with specific written instructions of Fermilab or the Government directing a change in the supplies to be delivered or in the materials or equipment to be used, or directing a manner of performance of the contract not normally used by the Contractor;

b) An infringement resulting from addition to, or change in, such supplies or components furnished or construction work performed which addition or change was made subsequent to delivery or performance by the Contractor; or

c) A claimed infringement which is settled without the consent of the Contractor, unless required by final decree of a court of competent jurisdiction.

CLEAN AIR AND WATER

1. **DEFINITIONS AS USED IN THIS CLAUSE:**

a) "Air Act" means the Clean Air Act (42 U.S.C. 7401 et seq.).

b) "Clean Air Standards" means,

1) Any enforceable rules, regulations, guidelines, standards, limitations, orders, controls, prohibitions, work practices, or other requirements contained in, issued under, or otherwise adopted under the Air Act or Executive Order 11738.

2) An applicable implementation plan as described in section 110(d) of the Air Act (42 U.S.C. 7410(d));

3) An approved implementation procedure or plan under section 111(c) or section 111(d) of the Air Act (42 U.S.C. 7411(c) or (d)); or

4) An approved implementation procedure under section 112(d) of the Air Act (42 U.S.C. 7412(d)).

c) "Clean water standards," means any enforceable limitation, control, condition, prohibition, standard, or other requirement promulgated under the Water Act or contained in a permit issued to a discharger by the Environmental Protection Agency or by a State under an approved program as authorized by section 402 of the Water Act (33 U.S.C. 1342), or by local government to ensure compliance with pretreatment regulations as required by section 307 of the Water Act (33 U.S.C. 1317).

d) "Compliance," means compliance with:

1) Clean air or water standards; or

2) A schedule or plan ordered or approved by a court of competent jurisdiction, the Environmental Protection Agency, or an air or water pollution control agency under the requirements of the Air Act or Water Act and related regulations.

e) "Facility," means any building, plant, installation, structure, mine, vessel or other floating craft, location, or site of operations, owned, leased, or supervised by a Subcontractor or sub-subcontractor, used in the performance of a subcontract or sub-subcontract. When a location or site of operations includes more than one building, plant, installation or structure, the entire location or site shall be deemed a facility except when the Administrator, or a designee, of the Environmental Protection Agency, determines that independent facilities are collocated in one geographical area.

f) "Water Act," means Clean Water Act (33 U.S.C. 1251 et seq.).

2. **THE SUBCONTRACTOR AGREES:**

a) To comply with all the requirements of section 114 of the Clean Air Act (42 U.S.C. 7414) and section 308 of the Clean Water Act (33 U.S.C. 1318) relating to inspection, monitoring, entry, reports and information, as well as other requirements specified in section 114 and section 308 of the Air Act and the Water Act, and all regulations and guidelines issued to implement those acts before the award of this subcontract;

b) That no portion of the work required by this subcontract will be performed in a facility listed on the Environmental Protection Agency List of Violating Facilities on the date when this subcontract was awarded unless and until the EPA eliminates the name of the facility from the listing;

c) To use best efforts to comply with clean air standards and clean water standards at the facility in which the subcontract is being performed; and

d) To insert the substance of this clause into any non-exempt subcontract, including this subparagraph 2.(d).

PROGRESS PAYMENTS — TOTAL COSTS (SMALL BUSINESS)

Progress payments shall be made to the Subcontractor when requested as work progresses, but not more frequently than monthly in amounts approved by Fermilab, under the following conditions:

a) COMPUTATION OF AMOUNTS.

1) Unless the Subcontractor requests a smaller amount, each progress payment shall be computed as (i) 85 percent of the Subcontractor's total costs incurred under this subcontract, plus (ii) progress payments to sub-subcontractors (see paragraph (j) below), all less the sum of all previous progress payments made by Fermilab under this subcontract. Cost of money that would be allowable under 31.205-10 of the Federal Acquisition Regulation shall be deemed an incurred cost for progress payment purposes.

2) Accrued costs of Subcontractor contributions under employee pension plans shall be excluded until actually paid unless:

(i) The Subcontractor's practice is to make contributions to the retirement fund quarterly or more frequently; and

(ii) The contribution does not remain unpaid 30 days after the end of the applicable quarter or shorter payment period (any contribution remaining unpaid shall be excluded from the Subcontractor's total costs for progress payments until paid).

3) The Subcontractor shall not include the following in total costs for progress payment purposes in subparagraph (a)(1)(i) above:

(i) Costs that are not reasonable, allocable to this subcontract, and consistent with sound and generally accepted accounting principles and practices.

(ii) Costs incurred by sub-subcontractors or suppliers.

(iii) Costs ordinarily capitalized and subject to depreciation or amortization except for the properly depreciated or amortized portion of such costs.

(iv) Payments made or amounts payable to sub-subcontractors or suppliers, except for:

(a) Completed work, including partial deliveries, to which the Subcontractor has acquired title; and

(b) Work under cost-reimbursement or time-and-material sub-subcontracts to which the Subcontractor has acquired title.

4) The amount of unliquidated progress payments may exceed neither (i) the progress payments made against incomplete work (including allowable unliquidated progress payments to sub-subcontractors) nor (ii) the value, for progress payment purposes, of the incomplete work. Incomplete work shall be considered to be the supplies and services required by this subcontract, for which delivery and invoicing by the Subcontractor and acceptance by Fermilab are incomplete.

5) The total amount of progress payments shall not exceed 85 percent of the total subcontract price.

6) If a progress payment or the unliquidated progress payments exceed the amounts permitted by subparagraphs (a)(4) or (a)(5) above, the Subcontractor shall repay the amount of such excess to Fermilab on demand.

b) LIQUIDATION.

Except as provided in the Termination for Convenience of Fermilab clause, all progress payments shall be liquidated by deducting from any payment under this subcontract, other than advance or progress payments, the unliquidated progress payments, or 85 percent of the amount invoiced, whichever is less. The Subcontractor shall repay to Fermilab any amounts required by a retroactive price reduction, after computing liquidations and payments on past invoices at the reduced prices and adjusting the unliquidated progress payments accordingly. Fermilab reserves the right to unilaterally change from the ordinary liquidation rate to an alternate rate when deemed appropriate for proper subcontract financing.

c) REDUCTION OR SUSPENSION.

Fermilab may reduce or suspend progress payments, increase the rate of liquidation, or take a combination of these actions, after finding on substantial evidence any of the following conditions:

1) The Subcontractor failed to comply with any material requirement of this subcontract (which includes paragraphs (f) and (g) below).

2) Performance of this subcontract is endangered by the Subcontractor's (i) failure to make progress or (ii) unsatisfactory financial condition.

3) Inventory allocated to this subcontract substantially exceeds reasonable requirements.

4) The Subcontractor is delinquent in payment of the costs of performing this subcontract in the ordinary course of business.

5) The unliquidated progress payments exceed the fair value of the work accomplished on the undelivered portion of this subcontract.

6) The Subcontractor is realizing less profit than reflected in the establishment of any alternate liquidation rate in paragraph (b) above, and that rate is less than the progress payment rate stated in subparagraph (a)(1) above.

d) TITLE.

1) Title to the property described in this paragraph (d) shall vest in the Government. Vestiture shall be immediately upon the date of this subcontract, for property acquired or produced before that date. Otherwise, vestiture shall occur when the property is or should have been allocable or properly chargeable to this subcontract.

2) "Property" as used in this clause, includes all of the below described items acquired or produced by the Subcontractor that are or should be allocable or properly chargeable to this subcontract under sound and generally accepted accounting principles and practices.

(i) Parts, materials, and work in process;

(ii) Special tooling and special test equipment to which the Government is to acquire title under any other clause of this subcontract;

(iii) Nondurable (i.e., noncapital) tools, jigs, dies, fixtures, molds, patterns, taps, gauges, test equipment, and other similar manufacturing

aids, title to which would not be obtained as special tooling under subparagraph (ii) above; and

(iv) Drawings and technical data, to the extent the Subcontractor or sub-subcontractors are required to deliver them to Fermilab by other clauses of this subcontract.

3) Although title to property is in the Government under this clause, other applicable clauses of this subcontract, e.g., the termination clause, shall determine the handling and disposition of the property.

4) The Subcontractor may sell any scrap resulting from the production under this subcontract without requesting Fermilab's approval, but the proceeds shall be credited against the costs of performance.

5) To acquire for its own use or dispose of property to which title is vested in the Government under this clause, the Subcontractor must obtain Fermilab's advance approval of the action and the terms. The Subcontractor shall (i) exclude the allocable costs of the property from the costs of subcontract performance, and (ii) repay to Fermilab any amount of unliquidated progress payments allocable to the property. Repayment may be by cash or credit memorandum.

6) When the Subcontractor completes all of the obligations under this subcontract, including liquidation of all progress payments, title shall vest in the Subcontractor for all property (or the proceeds thereof) not—

(i) Delivered to, and accepted by Fermilab under this subcontract; or

(ii) Incorporated in supplies delivered to, and accepted by, Fermilab under this subcontract and to which title is vested in the Government under this clause.

7) The terms of this subcontract concerning liability for Fermilab-furnished property shall not apply to property to which the Government acquired title solely under this clause.

e) RISK OF LOSS.

Before delivery to and acceptance by Fermilab, the Subcontractor shall bear the risk of loss for property, the title to which vests in the Government under this clause, except to the extent Fermilab expressly assumes the risk. The Subcontractor shall repay Fermilab an amount equal to the unliquidated progress payments that are based on costs allocable to property that is damaged, lost, stolen, or destroyed.

f) CONTROL OF COSTS AND PROPERTY.

The Subcontractor shall maintain an accounting system and controls adequate for the proper administration of this clause.

g) REPORTS AND ACCESS TO RECORDS.

The Subcontractor shall promptly furnish reports, certificates, financial statements, and other pertinent information reasonably requested by Fermilab for the administration of this clause. Also, the Subcontractor shall give Fermilab reasonable opportunity to examine and verify the Subcontractor's books, records and accounts.

h) SPECIAL TERMS REGARDING DEFAULT.

If this subcontract is terminated under the Default clause, (i) the Subcontractor shall, on demand, repay to Fermilab the amount of unliquidated progress payments and (ii) title shall vest in the Subcontractor, on full liquidation of progress payments, for all property for which Fermilab elects not to require delivery under the Default clause. Fermilab shall be liable for no payment except as provided by the Default clause.

i) RESERVATIONS OF RIGHTS.

1) No payment or vesting of title under this clause shall (i) excuse the Subcontractor from performance of obligations under this subcontract or (ii) constitute a waiver of any of the rights or remedies of the parties under the subcontract.

2) Fermilab's rights and remedies under this clause (i) shall not be exclusive but rather shall be in addition to any other rights and remedies provided by law or this subcontract and (ii) shall not be affected by delayed, partial, or omitted exercise of any right, remedy, power, or privilege, nor shall such exercise or any single exercise preclude or impair any further exercise under this clause or the exercise of any other right, power, or privilege of Fermilab.

j) PROGRESS PAYMENTS TO SUB-SUBCONTRACTORS.

The amounts mentioned in (a)(1)(ii) above shall be all progress payments to sub-subcontractors or divisions, if the following conditions are met:

1) The amounts included are limited to (i) the unliquidated remainder of progress payments made plus (ii) for small business concerns any unpaid sub-subcontractor requests for progress payments that the Subcontractor has approved for current payment in the ordinary course of business.

2) The sub-subcontract or interdivisional order is expected to involve a minimum of approximately 6 months between the beginning of work and the first delivery, or, if the sub-subcontractor is a small business concern, 4 months.

3) The terms of the sub-subcontract or interdivisional order concerning progress payments —

(i) Are substantially similar to the terms of the clause at 52.232-16, Progress Payments, of the Federal Acquisition Regulation (or that clause with its Alternate I for any sub-subcontractor that is a small business concern);

(ii) Are at least as favorable to Fermilab as the terms of this clause;

(iii) Are not more favorable to the sub-subcontractor or division than the terms of this clause are to the Subcontractor.

(iv) Are in conformance with the requirements of paragraph 32.504(e) of the Federal Acquisition Regulation; and

(v) Subordinate all sub-subcontractor rights concerning property to which the Government has title under the sub-subcontract to Fermilab's right to require delivery of the property to Fermilab if (A) the Subcontractor defaults or (B) the sub-subcontractor becomes bankrupt or insolvent.

4) The progress payment rate in the sub-subcontract is the customary rate used by Fermilab depending on whether the sub-subcontractor is or is not a small business concern.

5) The parties agree concerning any proceeds received by Fermilab for property to which title has vested in

the Government under the sub-subcontract terms, that the proceeds shall be applied to reducing any unliquidated progress payments by Fermilab to the Subcontractor under this subcontract.

6) If no unliquidated progress payments to the Subcontractor remain, but there are unliquidated progress payments that the Subcontractor has made to any sub-subcontractor, the Subcontractor shall be subrogated to all the rights Fermilab obtained through the terms required by this clause to be in any sub-subcontract as if all such rights had been assigned and transferred to the Subcontractor.

7) The Subcontractor shall pay the sub-subcontractor progress payment request under subdivision (j)(1)(i) above, within a reasonable time after receiving Fermilab's progress payment covering those amounts.

8) To facilitate small business participation in sub-subcontracting under this subcontract, the Subcontractor agrees to provide progress payments to small business concerns, in conformity with the standards for customary progress payments stated in Subpart 32.5 of the Federal Acquisition Regulation. The Subcontractor further agrees that the need for such progress payments shall not be considered as a handicap or adverse factor in the award of sub-subcontracts.

LABOR SURPLUS AREA SUB-SUBCONTRACTING PROGRAM

1. **DEFINITIONS.**

See the Utilization of Labor Surplus Area Concerns clause of this subcontract, for applicable definitions.

2. The Subcontractor agrees to establish and conduct a program to encourage labor surplus area (LSA) concerns to compete for sub-subcontracts within their capabilities when the sub-subcontracts are consistent with the efficient performance of the subcontract at prices no higher than obtainable elsewhere. The Subcontractor shall:

a) Designate a liaison officer who will (i) maintain liaison with authorized representatives of Fermilab on LSA matters, (ii) supervise compliance with the Utilization of Labor Surplus Area Concerns clause, and (iii) administer the Subcontractor's 'Labor Surplus Area Sub-subcontracting Program';

b) Provide adequate and timely consideration of the potentialities of LSA concerns in all "make-or-buy" decisions;

c) Ensure that LSA concerns have an equitable opportunity to compete for sub-subcontracts, particularly by arranging solicitations, time for the preparation of offers, quantities, specifications, and delivery schedules so as to facilitate the participation of LSA concerns;

d) Include the Utilization of Labor Surplus Area Concerns clause in sub-subcontracts that offer substantial LSA sub-subcontracting opportunities; and

e) Maintain records showing (i) the procedures which have been adopted and (ii) the Subcontractor's performance, to comply with this clause. The records will be kept available for review by Fermilab until the expiration of 1 year after the award of this subcontract, or for such longer period as may be required by any other clause of this subcontract or by applicable law or regulations.

f) The Subcontractor further agrees to insert, in any related sub-subcontract hereunder that may exceed $500,000 and that contains the Utilization of Labor Area Concerns clause, terms that shall conform substantially to the language of this clause, including this paragraph (f), and to notify Fermilab of the names of such sub-subcontractors.

FERMILAB FIXED PRICE SUPPLY SUBCONTRACT TERMS & CONDITIONS

1.	Changes	1
2.	Reports & Records	1
3.	Payment	1
4.	Inspection of Supplies—Fixed Price	1-2
5.	Warranty	2
6.	Responsibility for Supplies	2
7.	Termination for Convenience of Fermilab	2-4
8.	Default	4
9.	Reserved	5
10.	Buy American Act—Supplies	5
11.	Walsh-Healey Public Contracts Act	5
12.	Restrictive Legends	5
13.	Permits	5
14.	Reserved	5
15.	Extras	5

1. CHANGES

1.1 Fermilab may at any time, by a written order, and without notice to the sureties, if any, make changes within the general scope of this subcontract in any one or more of the following:

(a) drawings, designs or specifications when the supplies to be furnished are to be specially manufactured for Fermilab in accordance with the drawings, designs or specifications.

(b) method of shipment or packing.

(c) place of delivery.

1.2 If any such change causes an increase or decrease in the cost of, or the time required for, the performance of any part of the work under this subcontract, whether or not changed by the order, Fermilab shall make an equitable adjustment in the subcontract price, the delivery schedule, or both, and shall modify the subcontract.

1.3 The Subcontractor must submit any "proposal for adjustment" (hereafter referred to as proposal) under this clause within 30 days from the date of receipt of the written order. However, if Fermilab decides that the facts justify it, Fermilab may receive and act upon a proposal submitted before final payment of the subcontract.

1.4 If the Subcontractor's proposal includes the cost of property made obsolete or excess by the change, Fermilab shall have the right to prescribe the manner of the disposition of the property.

2. REPORTS AND RECORDS

2.1 The Subcontractor shall make such reports to Fermilab and maintain such records with respect to the Subcontractor's activities under this subcontract as Fermilab may require from time to time.

3. PAYMENT

Payment will be made after acceptance by Fermilab and receipt of a proper invoice. Discount time will be computed from date of delivery at place of acceptance or from receipt of proper invoice at the office specified by Fermilab, whichever is later. Payment is made, for discount purposes, when check is mailed.

4. INSPECTION OF SUPPLIES—FIXED-PRICE

4.1 Definition. "Supplies," as used in this clause, includes but is not limited to raw materials, components, intermediate assemblies, end products, and lots of supplies.

4.2 The Subcontractor shall provide and maintain an inspection system acceptable to Fermilab covering supplies under this subcontract and shall tender to Fermilab for acceptance only supplies that have been inspected in accordance with the inspection system and have been found by the Subcontractor to be in conformity with subcontract requirements. As part of the system, the Subcontractor shall prepare records evidencing all inspections made under the system and the outcome. These records shall be kept complete and made available to Fermilab during subcontract performance and for as long afterwards as the subcontract requires. Fermilab may perform reviews and evaluations as reasonably necessary to ascertain compliance with this paragraph. These reviews and evaluations shall be conducted in a manner that will not unduly delay the subcontract work. The right of review, whether exercised or not, does not relieve the Subcontractor of the obligations under the subcontract.

4.3 Fermilab has the right to inspect and test all supplies called for by the subcontract, to the extent practicable, at all places and times, including the period of manufacture, and in any event before acceptance. Fermilab shall perform inspections and tests in a manner that will not unduly delay the work. Fermilab assumes no contractual obligation to perform any inspection and test for the benefit of the Subcontractor unless specifically set forth elsewhere in this subcontract.

4.4 If Fermilab performs inspection or test on the premises of the Subcontractor or a sub-subcontractor, the Subcontractor shall furnish, and shall require sub-subcontractors to furnish, without additional charge, all reasonable facilities and assistance for the safe and convenient performance of these duties. Except as otherwise provided in the subcontact, Fermilab shall bear the expense of Fermilab inspections or tests made at other than the Subcontractor's or sub-subcontractor's premises; *provided*, that in case of rejection, Fermilab shall not be liable for any reduction in the value of inspection or test samples.

4.5 (a) When supplies are not ready at the time specified by the Subcontractor for inspection or test, Fermilab may charge to the Subcontractor the additional cost of inspection or test.

(b) Fermilab may also charge the Subcontractor for any additional cost of inspection or test when prior rejection makes reinspection or retest necessary.

4.6 Fermilab has the right either to reject or to require correction of nonconforming supplies. Supplies are nonconforming when they are defective in material or workmanship or are otherwise not in conformity with subcontract requirements. Fermilab may reject nonconforming supplies with or without disposition instructions.

4.7 The Subcontractor shall remove supplies rejected or required to be corrected. However, Fermilab may require or permit correction in place, promptly after notice, by and at the expense of the Subcontractor. The Subcontractor shall not tender for acceptance corrected or rejected supplies without disclosing the former rejection or requirement for correction, and, when required, shall disclose the corrective action taken.

4.8 If the Subcontractor fails to promptly remove, replace, or correct rejected supplies that are required to be removed or to be replaced or corrected, Fermilab may either (a) by subcontract or otherwise, remove, replace, or correct the supplies and charge the cost to the Subcontractor or (b) terminate the subcontract for default. Unless the Subcontractor corrects or replaces the supplies within the delivery schedule, Fermilab may require their delivery and make an equitable price reduction.

4.9 Fermilab shall accept or reject supplies as promptly as practicable after delivery, unless otherwise provided in the subcontract. Fermilab failure to inspect and accept or reject the supplies shall not relieve the Subcontractor from responsibility, nor impose liability on Fermilab, for nonconforming supplies.

4.10 Inspections and tests by Fermilab do not relieve the Subcontractor of responsibility for defects or other failures to meet subcontract requirements discovered before acceptance. Acceptance shall be conclusive, except for latent defects, fraud, gross mistakes amounting to fraud, or as otherwise provided in the subcontract.

4.11 If acceptance is not conclusive for any of the reasons in paragraph 4.10 hereof, Fermilab, in addition to any other rights and remedies provided by law, or under other provisions of this subcontract, shall have the right to require the Subcontractor (a) at no increase in subcontract price, to correct or replace the defective or nonconforming supplies at the original point of delivery or at the Subcontractor's plant at Fermilab's election, and in accordance with a reasonable delivery schedule as may be agreed upon between the Subcontractor and Fermilab; *provided*, that Fermilab may require a reduction in subcontract price if the Subcontractor fails to meet such delivery schedule, or (b) within a reasonable time after receipt by the Subcontractor of notice of defects or nonconformance, to repay such portion of the subcontract as is equitable under the circumstances if Fermilab elects not to require correction or replacement. When supplies are returned to the Subcontractor, the Subcontractor shall bear the transportation cost from the original point of delivery to the Subcontractor's plant and return to the original point when that point is not the Subcontractor's plant. If the Subcontractor fails to perform or act as required in (a) or (b) above and does not cure such failure within a period of 10 days (or such longer period as Fermilab may authorize in writing) after receipt of notice from Fermilab specifying such failure, Fermilab shall have the right to contract or otherwise to replace or correct such supplies and charge to the Subcontractor the cost occasioned Fermilab thereby.

5. WARRANTY

5.1 Subcontractor warrants: All supplies, materials, and related services, hereinafter called "supplies", furnished under this subcontract will conform to the specifications and all other requirements of this subcontract and will be free from defects in material or workmanship.

5.2 Such warranties together with Subcontractor's service warranties and guarantees, if any, shall survive inspection, tests, acceptance of and payment for the supplies and shall run to Fermilab, its successors and assigns. The Subcontractor shall, within a reasonable time after receipt of written notice thereof, repair or replace, at its own expense, including transportation costs, if any, and without cost to Fermilab, any defects in materials or workmanship or nonconformance with specifications which may appear during the period ending on a date twelve months after initial use or eighteen months after delivery, whichever is earlier, unless a different warranty period is provided in this subcontract. If, within a reasonable time, Subcontractor is unable or refuses to correct or replace such defective or nonconforming supplies, Fermilab may, at its option, either return for credit or may by subcontract or otherwise repair or replace such supplies and assess Subcontractor the cost occasioned thereby. The rights and remedies of Fermilab provided in this clause are in addition to and do not limit any rights afforded to Fermilab by law or by any other clause of this subcontract.

5.3 If the specifications provide for the furnishing of designs by the Subcontractor, the Subcontractor shall have complete responsibility for the adequacy of designs to meet performance requirements.

6. RESPONSIBILITY FOR SUPPLIES

6.1 Title to supplies furnished under this subcontract shall pass to the Government upon formal acceptance, regardless of when or where Fermilab takes physical possession, unless the subcontract specifically provides for earlier passage of title.

6.2 Unless the subcontract specifically provides otherwise, risk of loss of or damage to supplies shall remain with the Subcontractor until, and shall pass to Fermilab upon—

(a) Delivery of the supplies to a carrier, if transportation is f.o.b. origin; or

(b) Acceptance by Fermilab or delivery of the supplies to Fermilab at the destination specified in the subcontract, whichever is later, if transportation is f.o.b. destination.

6.3 Paragraph 6.2 above shall not apply to supplies that so fail to conform to subcontract requirements as to give a right of rejection. The risk of loss of or damage to such nonconforming supplies remains with the Subcontractor until cure or acceptance. After cure or acceptance, paragraph 6.2 above shall apply.

6.4 Under paragraph 6.2 above, the Subcontractor shall not be liable for loss of or damage to supplies caused by the negligence of officers, agents, or employees of Fermilab acting within the scope of their employment.

7. TERMINATION FOR CONVENIENCE OF FERMILAB

7.1 Fermilab may terminate peformance of work under this subcontract in whole or, from time to time, in part if it determines that a termination is in Fermilab's interest. Fermilab shall terminate by delivering to the Subcontractor a Notice of Termination specifying the extent of termination and the effective date.

7.2 After receipt of a Notice of Termination, and except as directed by Fermilab, the Subcontractor shall immediately proceed with the following obligations, regardless of any delay in determining or adjusting any amounts due under this clause:

(a) Stop work as specified in the notice.

(b) Place no further sub-subcontracts or orders (referred to as sub-subcontracts in this clause) materials, services, or facilities, except as necessary to complete the continued portion of the subcontract.

(c) Terminate all sub-subcontracts to the extent they relate to the work terminated.

(d) Assign to Fermilab, as directed by Fermilab, all right, title, and interest of the Subcontractor under the sub-subcontracts terminated, in which case Fermilab shall have the right to settle or to pay any termination settlement proposal arising out of those terminations.

(e) With approval or ratification, to the extent required by Fermilab, settle all outstanding liabilities and termination settlement proposals arising from the termination of sub-subcontracts; the approval or ratification will be final for purposes of this clause.

(f) As directed by Fermilab, transfer title and deliver to Fermilab (i) the fabricated or unfabricated parts, work in process, completed work, supplies, and other material produced or acquired for the work terminated, and (ii) the completed or partially completed plans, drawings, information, and other property that, if the subcontract had been completed, would be required to be furnished to Fermilab.

(g) Complete performance of the work not terminated.

(h) Take any action that may be necessary, or that Fermilab may direct, for the protection and preservation of the property related to this subcontract that is in the possession of the Subcontractor and in which Fermilab has or may acquire an interest.

(i) Use its best efforts to sell, as directed or authorized by Fermilab, any property of the types referred to in subparagraph (f) above; *provided,* however, that the Subcontractor (i) is not required to extend credit to any purchaser and (ii) may acquire the property under the conditions prescribed by, and at prices approved by, Fermilab. The proceeds of any transfer or disposition will be applied to reduce any payments to be made by Fermilab under this Subcontract, credited to the price or cost of the work, or paid in any other manner directed by Fermilab.

7.3 After expiration of the plant clearance period as defined in Subpart 45.6 of the Federal Acquisition Regulation, the Subcontractor may submit to Fermilab a list, certified as to quantity and quality, of termination inventory not previously disposed of, excluding items authorized for disposition by Fermilab. The Subcontractor may request Fermilab to remove those items or enter into an agreement for their storage. Within 15 days, Fermilab will accept title to those items and remove them or enter into a storage agreement. Fermilab may verify the list upon removal of the items, or if stored, within 45 days from submission of the list, and shall correct the list, as necessary, before final settlement.

7.4 After termination, the Subcontractor shall submit a final termination settlement proposal to Fermilab in the form and with the certification prescribed by Fermilab. The Subcontractor shall submit the proposal promptly, but no later than 1 year from the effective date of termination, unless extended in writing by Fermilab upon written request of the Subcontractor within this 1-year period. However, if Fermilab determines that the facts justify it, a termination settlement proposal may be received and acted on after 1 year or any extension. If the Subcontractor fails to submit the proposal within the time allowed, Fermilab may determine, on the basis of information available, the amount, if any, due the Subcontractor because of the termination and shall pay the amount determined.

7.5 Subject to preceding paragraph 7.4, the Subcontractor and Fermilab may agree upon the whole or any part of the amount to be paid because of the termination. The amount may include a reasonable allowance for profit on work done. However, the agreed amount, whether under this paragraph 7.5 or paragraph 7.6 below, exclusive of costs shown in subparagraph 7.6 (3) below, may not exceed the total subcontract price as reduced by (a) the amount of payments previously made and (2) the subcontract price of work not terminated. The subcontract shall be amended, and the Subcontractor paid the agreed amount. Paragraph 7.6 below shall not limit, restrict, or affect the amount that may be agreed upon to be paid under this paragraph.

7.6 If the Subcontractor and Fermilab fail to agree on the whole amount to be paid because of the termination of work, Fermilab shall pay the Subcontractor the amounts determined by Fermilab as follows, but without duplication of any amounts agreed on under paragraph 7.5 above:

(1) The subcontract price for completed supplies or services accepted by Fermilab (or sold or acquired under subparagraph 7.2 (a) on previous page) not previously paid for, adjusted for any saving of freight and other charges.

(2) The total of—

i) The costs incurred in the performance of the work terminated, including initial costs and preparatory expense allocable thereto, but excluding any costs attributable to supplies or services paid or to be paid under subparagraph 7.6 (1) above;

ii) The cost of settling and paying termination settlement proposals under terminated sub-subcontracts that are properly chargeable to the terminated portion of the subcontract if not included in subdivision (i) above; and

iii) A sum, as profit on subdivision (i) above, determined by Fermilab under 49.202 of the Federal Acquisition Regulation, in effect on the date of this subcontract, to be fair and reasonable; however, if it appears that the Subcontractor would have sustained a loss on the entire subcontract had it been completed, Fermilab shall allow no profit under this subdivision (iii) and shall reduce the settlement to reflect the indicated rate of loss.

(3) The reasonable costs of settlement of the work terminated, including—

i) Accounting, legal, clerical, and other expenses reasonably necessary for the preparation of termination settlement proposals and supporting data;

ii) The termination and settlement of sub-subcontracts (excluding the amounts of such settlements); and

iii) Storage, transportation, and other costs incurred, reasonably necessary for the preservation, protection, or disposition of the termination inventory.

7.7 Except for normal spoilage, and except to the extent that Fermilab expressly assumed the risk of loss, Fermilab shall exclude from the amounts payable to the Subcontractor under paragraph 7.6 above, the fair value, as determined by Fermilab, of property that is destroyed, lost, stolen, or damaged so as to become undeliverable to Fermilab or to a buyer.

7.8 The cost principles and procedures of Part 31 of the Federal Acquisition Regulation, in effect on the date of this subcontract, shall govern all costs claimed, agreed to, or determined under this clause.

7.9 In arriving at the amount due the Subcontractor under this clause, there shall be deducted—

(1) All unliquidated advance or other payments to the Subcontractor under the terminated portion of this subcontract;

(2) Any claim which Fermilab has against the Subcontractor under this subcontract; and

(3) The agreed price for, or the proceeds of sale of, materials, supplies, or other things acquired by the Subcontractor or sold under the provisions of this clause and not recovered by or credited to Fermilab.

7.10 If the termination is partial, the Subcontractor may file a proposal with Fermilab for an equitable adjustment of the price(s) of the continued portion of the Subcontract. Fermilab shall make any equitable adjustment agreed upon. Any proposal by the Subcontractor for an equitable adjustment under this clause shall be requested within 90 days from the effective date of termination unless extended in writing by Fermilab.

7.11 (1) Fermilab may, under the terms and conditions it prescribes, make partial payments and payments against costs incurred by the Subcontractor for the terminated portion of the subcontract, if Fermilab believes the total of these payments will not exceed the amount to which the Subcontractor will be entitled.

(2) If the total payments exceed the amount finally determined to be due, the Subcontractor shall repay the excess to Fermilab upon demand, together with interest computed at the rate established by the Secretary of the Treasury under 50 U.S.C. App. 1215(b)(2). Interest shall be computed for the period from the date the excess payment is received by the Subcontractor to the date the excess is repaid. Interest shall not be charged on any excess payment due to a reduction in the Subcontractor's termination settlement proposal because of retention or other disposition of termination inventory until 10 days after the date of the retention or disposition, or a later date determined by Fermilab because of the circumstances.

7.12 Unless otherwise provided in this subcontract or by statute, the Subcontractor shall maintain all records and documents relating to the terminated portion of this subcontract for 3 years after final settlement. This includes all books and other evidence bearing on the Subcontractor's costs and expenses under this subcontract. The Subcontractor shall make these records and documents available to Fermilab, at the Subcontractor's office, at all reasonable times, without any direct charge. If approved by Fermilab, photographs, microphotographs, or other authentic reproductions may be maintained instead of original records and documents.

8. DEFAULT

8.1 (a) Fermilab may, subject to following paragraphs 8.3 and 8.4, by written notice of default to the Subcontractor, terminate this subcontract in whole or in part if the Subcontractor fails to—

i) Deliver the supplies or to perform the services within the time specified in this subcontract or any extension;

ii) Make progress, so as to endanger performance of this subcontract; or

iii) Perform any of the other provisions of this subcontract.

(b) Fermilab's right to terminate this subcontract under subdivisions 8.1 (a) (ii) and 8.1 (a) (iii) above, may be exercised if the Subcontractor does not cure such failure within 10 days (or more if authorized in writing by Fermilab) after receipt of the notice from Fermilab specifying the failure.

8.2 If Fermilab terminates this subcontract in whole or in part, it may acquire, under the terms and in the manner it considers appropriate, supplies or services similar to those terminated, and the Subcontractor will be liable to Fermilab for any excess costs for those supplies or services. However, the Subcontractor shall continue the work not terminated.

8.3 Except for defaults of sub-subcontractors at any tier, the Subcontractor shall not be liable for any excess costs if the failure to perform the subcontract arises from causes beyond the control and without the fault or negligence of the Subcontractor. Examples of such causes include (1) acts of God or of the public enemy, (2) acts of the Government in its sovereign capacity, (3) fires, (4) floods, (5) epidemics, (6) quarantine restrictions, (7) strikes, (8) freight embargoes, and (9) unusually severe weather. In each instance the failure to perform must be beyond the control and without the fault or negligence of the Subcontractor.

8.4 If the failure to perform is caused by the default of a sub-subcontractor at any tier, and if the cause of the default is beyond the control of both the Subcontractor and sub-subcontractor, and without the fault or negligence of either, the Subcontractor shall not be liable for any excess costs for failure to perform, unless the sub-subcontracted supplies or services were obtainable from other sources in sufficient time for the Subcontractor to meet the required delivery schedule.

8.5 If this subcontract is terminated for default, Fermilab may require the Subcontractor to transfer title to the Government, and deliver to Fermilab as directed by it, any (1) completed supplies, and (2) partially completed supplies and materials, parts, tools, dies, jigs, fixtures, plans, drawings, information, and contract rights (collectively referred to as "manufacturing materials" in this clause) that the Subcontractor has specifically produced or acquired for the terminated portion of this Subcontract. Upon direction of Fermilab, the Subcontractor shall also protect and preserve property in its possession in which the Government or Fermilab has an interest.

8.6 Fermilab shall pay the subcontract price for completed supplies delivered and accepted. The Subcontractor and Fermilab shall agree on the amount of payment for manufacturing materials delivered and accepted and for the protection and preservation of the property. Fermilab may withhold from these amounts any sum it determines to be necessary to protect it against loss because of outstanding liens or claims of former lien holders.

8.7 If, after termination, it is determined that the Subcontractor was not in default, or that the default was excusable, the rights and obligations of the parties shall be the same as if the termination had been issued for the convenience of Fermilab.

8.8 The rights and remedies of Fermilab in this clause are in addition to any other rights and remedies provided by law or under this subcontract.

9. RESERVED

10. BUY AMERICAN ACT—SUPPLIES

10.1 The Buy American Act (41 U.S.C. 10) provides that the Government give preference to domestic end products. As used in this clause:

(a) "Components" means those articles, materials, and supplies which are directly incorporated into the end product;

(b) "Domestic end product" means

1) an unmanufactured end product mined or produced in the United States, or

2) an end product manufactured in the United States if the cost of all its components mined, produced, or manufactured in the United States exceeds 50 percent of the cost of all its components. Components of foreign origin of the same type or kind as the products referred to in subparagraph 10.2 (c) or (d) of this clause shall be treated as domestic. Scrap generated, collected, and prepared for processing in the United States is considered domestic.

(c) "End products" means those articles, materials, and supplies to be acquired for public use under this subcontract.

10.2 The Subcontractor shall deliver only domestic source end products, except those:

(a) For use outside the United States;

(b) That the Government determines are not mined, produced, or manufactured in the United States in sufficient and reasonably available commercial quantities and of a satisfactory quality;

(c) For which the Department determines that domestic preference would be inconsistent with the public interest; or

(d) For which the Department determines the cost to be unreasonable.

(The foregoing requirements are administered in accordance with Executive Order No. 10582, dated December 17, 1954, as amended, and Subpart 25.1 of the Federal Acquisition Regulation).

11. WALSH-HEALEY PUBLIC CONTRACTS ACT

11.1 If this subcontract is for the manufacture or furnishing of materials, supplies, articles, or equipment in an amount which exceeds or may exceed $10,000 and is subject to the Walsh-Healey Public Contracts Act, as amended (41 U.S.C. 35-45),

(a) All representations and stipulations required by the Act and regulations issued by the Secretary of Labor (41 CFR Chapter 50) are incorporated by reference. These representations and stipulations are subject to all applicable rulings and interpretations of the Secretary of Labor that are now, or may hereafter, be in effect.

(b) All employees whose work relates to this subcontract shall be paid not less than the minimum wage prescribed by regulations issued by the Secretary of Labor (41 CFR 50-202.2). Learners, student learners, apprentices, and handicapped workers may be employed at less than the prescribed minimum wage (see 41 CFR 50-202.3) to the same extent that such employment is permitted under Section 14 of the Fair Labor Standards Act (41 U.S.C. 40).

12. RESTRICTIVE LEGENDS

12.1 Subcontractor shall not, unless expressly authorized by this subcontract, furnish, supply or deliver any data that is of a proprietary nature, is a trade secret or bears a restrictive legend. Fermilab assumes no liability with respect to data delivered without express authorization.

13. PERMITS

13.1 Except as otherwise directed by Fermilab, the Subcontractor shall procure all necessary permits or licenses and abide by all applicable laws, regulations, and ordinances of the United States and of the State, territory, and political subdivision in which the work under this subcontract is performed.

14. RESERVED

15. EXTRAS

15.1 Except as otherwise provided in this subcontract, no payment for extras shall be made unless such extras and the price therefor have been authorized in writing by Fermilab.

ADDENDUM 1 TO FL-2 & FL-3

1. DEFINITIONS

As used throughout this Addendum, the following terms shall have the meaning set forth below:

(a) The words "contract" or "Contractor" shall mean "subcontract" or "Subcontractor", respectively.

(b) The words "subcontract" or "Subcontractor" shall mean "sub-subcontract" or "Sub-subcontractor", respectively.

2. ADDITIONAL TECHNICAL DATA REQUIREMENTS

(a) In addition to the technical data specified elsewhere in this contract to be delivered, Fermilab or the Government may at any time during the contract performance or within one year after final payment call for the Contractor to deliver any technical data first produced or specifically used in the performance of this contract except technical data pertaining to items of standard commercial design.

(b) The provisions of the "Rights in Technical Data" clause included in this contract are applicable to all technical data called for under this "Additional Technical Data Requirements" clause. Accordingly, nothing contained in this clause shall require the Contractor to actually deliver any technical data, the delivery of which is excused by paragraph (e) of the "Rights in Technical Data" clause.

(c) When technical data are to be delivered under this clause, the Contractor will be compensated for appropriate costs for converting such data into the prescribed form, for reproduction, and for delivery.

3. RIGHTS IN TECHNICAL DATA — (Long Form)

(a) DEFINITIONS

(1) "Technical data" means recorded information regardless of form or characteristic, of a scientific or technical nature. It may, for example, document research, experimental, developmental, or demonstration, or engineering work, or be usable or used to define a design or process, or to procure, produce, support, maintain, or operate material. The data may be graphic or pictorial delineations in media such as drawings or photographs, text in specifications or related performance or design type documents or computer software (including computer programs, computer software data bases, and computer software documentation). Examples of technical data include research and engineering data, engineering drawings and associated lists, specifications, standards, process sheets, manuals, technical reports, catalog item identification, and related information. Technical data as used herein do not include financial reports, cost analyses, and other information incidental to contract administration.

(2) "Proprietary data" means technical data which embody trade secrets developed at private expense, such as design procedures or techniques, chemical composition of materials, or manufacturing methods, processes, or treatments, including minor modifications thereof, provided that such data:

(i) Are not generally known or available from other resources without obligation concerning their confidentiality;

(ii) Have not been made available by the owner to others without obligation concerning their confidentiality; and

(iii) Are not already available to the Government without obligation concerning their confidentiality.

(3) "Contract data" means technical data first produced in the performance of the contract, technical data which are specified to be delivered under the contract, technical data that may be called for under the "Additional Technical Data Requirements" clause of the contract, if any, or technical data actually delivered in connection with the contract.

(4) "Unlimited rights" means rights to use, duplicate, or disclose technical data, in whole or in part, in any manner and for any purpose whatsoever, and to permit others to do so.

(b) ALLOCATION OF RIGHTS

(1) The Government shall have:

(i) Unlimited rights in contract data except as otherwise provided below with respect to proprietary data.

(ii) The right to remove, cancel, correct or ignore any markings not authorized by the terms of this contract on any technical data furnished hereunder, if in response to a written inquiry by DOE concerning the propriety of the markings, the Contractor fails to respond thereto within 60 days or fails to substantiate the propriety of the markings. In either case DOE will notify the Contractor of the action taken.

(iii) No rights under this contract in any technical data which are not contract data.

(2) The Contractor shall have:

(i) The right to withhold proprietary data in accordance with the provisions of this clause; and

(ii) The right to use for its private purposes, subject to patent, security or other provisions of this contract, contract data it first produced

in the performance of this contract, provided the data requirements of this contract have been met as of the date of the private use of such data. The Contractor agrees that to the extent it receives or is given access to proprietary data or other technical, business or financial data in the form of recorded information from DOE or a DOE contractor or subcontractor, the Contractor shall treat such data in accordance with any restrictive legend contained thereon, unless use is specifically authorized by prior written approval of DOE.

(3) Nothing contained in this "Rights in Technical Data" clause shall imply a license to the Government under any patent or be construed as affecting the scope of any licenses or other rights otherwise granted to the Government under any patent.

(c) COPYRIGHTED MATERIAL

(1) The Contractor shall not, without prior written authorization of DOE, establish a claim to statutory copyright in any contract data first produced in the performance of the contract. To the extent such authorization is granted, the Government reserves for itself and others acting on its behalf a royalty-free, nonexclusive, irrevocable world-wide license for Governmental purposes to publish, distribute, translate, duplicate, exhibit and perform any such data copyrighted by the Contractor.

(2) The Contractor agrees not to include in the technical data delivered under the contract any material copyrighted by the Contractor and not to knowingly include any material copyrighted by others, without first granting or obtaining at no cost a license therein for the benefit of the Government of the same scope as set forth in paragraph (c) (1) above. If such royalty-free license is unavailable and the Contractor nevertheless determines that such copyrighted material must be included in the technical data to be delivered, rather than merely incorporated therein by reference, the Contractor shall obtain the written authorization of DOE to include such copyrighted material in the technical data prior to its delivery.

(d) SUBCONTRACTING

It is the responsibility of the Contractor to obtain from its subcontractors technical data and rights therein, on behalf of the Government, necessary to fulfill the Contractor's obligations to the Government with respect to such data. In the event of refusal by a subcontractor to accept a clause affording the Government such rights, the Contractor shall:

(1) Promptly submit written notice to DOE via Fermilab setting forth reasons for the subcontractor refusal and other pertinent information which may expedite disposition of the matter; and

(2) Not proceed with the subcontract without the written authorization of DOE.

(e) WITHHOLDING OF PROPRIETARY DATA

Notwithstanding the inclusion of the "Additional Technical Data Requirements" clause in this contract or any provision of this contract specifying the delivery of technical data, the Contractor may withhold proprietary data from delivery, provided that the Contractor furnishes in lieu of any such proprietary data so withheld technical data disclosing the source, size, configuration, mating and attachment characteristics, functional characteristics and performance requirements ("Form, Fit and Function" data, e.g., specification control drawings, catalog sheets, envelope drawings, etc.) or a general description of such proprietary data where "Form, Fit and Function" data are not applicable. The Government shall acquire no rights to any proprietary data so withheld except that such data shall be subject to the "inspection rights" provisions of paragraph (f), and, if included, the "Limited rights in proprietary data" provisions of paragraph (g) and the "Contractor licensing" provisions of paragraph (h).

(f) INSPECTION RIGHTS

Except as may be otherwise specified in this contract for specific items of proprietary data which are not subject to this paragraph, Fermilab's and the Government's representatives, at all reasonable times up to three (3) years after final payment under this contract, may inspect at the Contractor's facility any proprietary data withheld under paragraph (e) for the purposes of verifying that such data properly fell within the withholding provision of paragraph (e), or for evaluating work performance.