Storage Dewar U-Tube Design

3740.510-EN-220

July 5, 1989

K. Dixon

Checked by G. T. Mullen 11/9/89

INTRODUCTION

Eight (8) u-tubes, or transfer line jumpers, are to be assembled, tested, cleaned, and installed in the argon and nitrogen storage dewar piping at DAB. All jumpers have been assigned a DØ Cryogenic Piping Component Number and can be identified on the cryogenic flow piping schematic, drg. no. 3740-ME-222394. The design is essentially consistent with the rest of the cryogenic transfer lines within the building: a 1 1/2" NPS, St. Stl. 304 process flow line and a concentric 3" NPS outer line of the same material which contains the insulating vacuum and superinsulation. All jumpers are provided with Cryolab bayonets and CVI insulating space pumpout/relief valves (model no.s listed on the drawings in the appendix).

Two (2) nearly identical nitrogen dewar jumpers (Appendix, pps.1,2) provide liquid nitrogen to the transfer lines feeding the argon storage dewar and cryostat condensers. These jumpers, the only ones built at this time, will be pressure tested when the current line modifications are complete.

A 1" NPS Annubar® flowmeter is present in the argon storage dewar liquid argon jumper which flows to/from the line leading to the cryostats (Appendix, p.7). Cryogenic filters (see 3740.660-EN-188) are a part of this line, the gaseous argon line which essentially parallels the liquid line destination(App., p.6), and the condenser inlet line to the argon dewar. The filters are relatively heavy (approximately 70-80 lbs. empty) compared to the rest of the piping and are the largest contributor to the overall heat leak to the inner line. The filters have been separately pressure tested to 270 psig recently.

The condenser inlet jumper (App., p.8) is the most complicated line. It has a cryofilter in addition to a cooldown/operate flowmeter assembly (see drg. no. 3740.513-ME-273812) containing a Cryolab CV8 series "Y" valve. Just the opposite is true at the other side of the condenser, the outlet jumper (App., p.3) is the simplest argon dewar jumper to analyze and build.

Two jumpers are needed to connect the argon dewar to the tanker fill line: one routing liquid to the gas space of the storage dewar (App., p.5) for routine filling operations and the other allowing a pressurized dewar to

flow liquid upwards into a tanker (App., p.4) should the argon become contaminated and need to be exchanged.

Where appropriate, Circle Seal valves relieve trapped volumes and A and N Corp. vacuum fittings (see App., p.40 for detail, not currently shown on jumper drawings) access to the inner lines of the jumpers. These vacuum fittings were selected for their ability to hold up to 100 psig, their ease of use, and their ability to maintain a low leak rate during pump and purge operations.

STRESS ANALYSIS MODEL

All jumpers were first modeled (see App., pps. 10-15) using height dimensions that would provide the necessary clearance to easily view gages and not interfere with other dewar piping. A survey team provided the centerline to centerline distances of the female bayonets and the angular displacements (App., p. 16) and orientation of the existing argon dewar and mating flanges. Pages 17,18 in the Appendix outline most of the data used in the models. The effect of internal pressure was ignored in the analysis since it was much smaller than that due to thermal contraction.

The inner line of each male bayonet connection is welded to a rigid end plate which is tightly fixed into position by the inner diameter of each inner female bayonet (App., p.19). The outer piping of each line is rigidly terminated at each bayonet flange connection. Therefore, the model conservatively fixes the inner line end at the end plate and the outer at the flange which is several inches above this plate.

The cryofilters have a similar end plate. But to simplify the model, the inner and outer line are attached to this plate and are allowed to swing free. In order to conservatively compensate for the extra weight of the filter assembly not accounted for, a 70 lb. flange is hung on the outer piping at the same location as the o-ring flange. To reduce the thermal stresses due to length differences between the filters and vertical legs, and to ease installation, all cryofilters are located at the midspan between the jumper legs.

Modifications to the model of the standoffs, or 1/2" NPS non-process flow

connections at the corner tees, had to be made to compensate for the axial thermal gradient from liquid nitrogen to room temperature. The length of these standoffs was halved and the wall thickness was also substantially reduced to allow the same amount of movement in the rest of the piping allowed by the original length . The same provisions were made for the support tube of the extended bonnet of the Cryolab valve, part of the cooldown/operate flowmeter assembly (see App., pps.22,23). The small 1/2" NPS branch of that assembly was neglected in this analysis.

ANALYSIS and RESULTS

A number of analytical methods were initially employed to determine the maximum stresses and displacements encountered in the piping throughout the jumpers after the inner line had reached liquid nitrogen temperatures. The ANSYS® method was used because it takes into account many variables, the output tends to be more realistic and less conservative than the other simple approaches investigated (a comparison is shown in the Appendix, page 41 for one simple case). ANSYS® easily allows angular displacements to be a part of the input. This was either awkward or a non-existent feature for the other methods of stress analysis.

The only areas of concern in the piping displacements are at the corners of the jumpers. After looking at the worst case displacements (long vertical and horizontal span), it appeared that the inner pipe elbow cleared the outer miter joint by a only a few mils. To be on the safe side, all elbows were changed to short radius. Although this introduced a 25% increase in the stress level at the elbow, it is clear from later discussion that this is not a problem.

All jumpers, with the exception of the nearly identical nitrogen jumpers, are assigned a unique pipe run number 1-7. A "B" next to the numeral indicates that bellows are included in the outer 3 in. jackets and a "D" indicates angular displacements were accounted for at the ends of the legs. "BD" means that both of the above are included. A dash next to the number indicates that there are no angular displacements nor bellows assigned to that run. The small 2" OD bellows are included in all runs with standoffs.

All stresses listed on page 22, 23 of the Appendix are those greater than

12,750 psi (nodes found in App. pps. 24-31). According to the rules in ANSI/ASME B31.3 Piping Code (ref. 1), these stresses are large enough to place limitations on the thermal cycles that the jumpers will undergo (TP304, fusion welded piping). The stresses represented by the bold numerals are those that have exceeded 25,500 psi, the maximum allowable thermal stress limit. Even at this maximum value, the Code allows 7000 cycles. The number of full temperature range thermal cycles that we expect to see for a given line is about two orders of magnitude less than this number.

All stresses followed by an up arrow character (^) are false due to the inherent flaws of the model. By thinning the pipe walls and shortening the length of standoffs in the model, a stress 4Xs larger resulted. At the tee junctions of the model, one branch was reduced by ANSYS® to the diameter of the standoff at the vertex of the tee which introduced a unrealistically high stress intensity. Lastly, another reason to discount these stresses is that ANSYS® does not credit the bellows with the ability to take lateral displacements-which clearly the 2 in. bellows are capable of with a minimum of effort.

For pipe runs 1-5, none of the stresses determined by the ANSYS® output, except at standoffs, exceed the maximum allowed by the Code. Run 5, the gaseous argon jumper, does have stresses that will limit the number of cooldown cycles to 7000. Runs 6 and 7 clearly indicate that bellows are needed to keep the stresses from exceeding the maximum allowed.

The Achilles' heel of these jumpers appears to be at the inner line weld connection to the bayonets (see App., pps. 19, 42-43). Others from around the Lab have experienced problems with this weld cracking on transfer lines. From calculations using allowable stresses from the AISC for the strength of welds loaded in shear, the maximum allowable moment in the XZ plane is 1300 in-lbs. This maximum will even be lower for appreciable axial forces.

Another soft spot occurs with the outer line also at the bayonet. If we use the v-band retainer couplings currently stocked at Fermilab, Voss PN 1185-090BA, the maximum allowable moment in the XZ plane is 1000 in-lbs given that the axial forces are low (see App., p.44). This is based on a 300 psi maximum operating pressure and a 3-4 factor of safety given by a company representative.

For a given horizontal displacement, the inner line stresses can be reduced linearly with a reduction in pipe diameter and are proportional to the length of the vertical leg squared in the simple lines without filters. Reducing the diameter will also add pressure drop to the piping and increasing the leg lengths will make the u-tubes more awkward to install /remove and could be counterproductive for the lines with filters. Furthermore, none of these solutions remedies the problems with the outer piping.

By allowing a female bayonet on one end to "float" (relatively unrestricted motion in the horizontal plane), we can virtually eliminate all stresses at the bayonets. A much smaller moment will still be present at the bayonet due to the weight of the piping and filter (630 in-lb worse case). Floating the bayonets can be accomplished fairly easily by modifying the building-side piping supports to give us this movement and to ensure that all u-tubes have bellows allowing the inner piping to contract. All u-tubes will be constructed in situ-this will help alleviate additional stresses due to length mismatches, line skewing, etc.

Approximate heat leak values have also been calculated for all jumpers (App., p.45). Most values obtained were scaled from Cryolab Technical Data Bulletins (refs. 2,3). The estimate obtained for the filter was based on a similar 3"X5" bayonet assembly. No effort was made to determine the impact of this heat input to valve sizing, heat exchanger effectiveness, etc.

CONCLUSIONS

ANSYS® is a useful tool when looking at slightly complicated, relatively large diameter, u-tubes such as the ones to be built for DØ. The other analysis methods studied are useful to check the ANSYS® output and for simple u-tubes when a very conservative result is acceptable.

Future bayonet designs should have more moment resistance where the inner line attaches to the bayonet; perhaps a completely redesigned weld prep. For our piping, the simplest way to relieve the bayonet/clamp stresses due to these moments, is to allow horizontal movement in the building-side piping and provide bellows on the outer line of the jumpers.

ACKNOWLEDGEMENT

Thanks is given to Kay Weber for her patience and cooperation while programming and executing the ANSYS® runs for each model.

REFERENCES

1. Chemical Plant and Petroleum Refinery Piping, ANSI/ASME B31.3, 1984

2. Cryolab Technical Data, Bulletin Number A019A, 1985

3. Cryolab Technical Data, Bulletin Number A035A, 1987

4. Formulas for Stress and Strain, 5th Ed., Roark and Young, McGraw-Hill, 1975.

5. Manual of Steel Construction, 8th Ed., American Institute of Steel, 1980

6. Mechanical Engineering Design, 3rd Ed., Shigley, McGraw-Hill, 1977

APPENDIX

Argon Dewar Condenser, LN2 Supply U-Tube drg.	1
Cryostat Condenser, LN2 Supply U-Tube drg.	2
Condenser Outlet U-Tube drg.	3
LAr from Tanker U-Tube drg.	4
LAr to Tanker U-Tube drg.	5
GAr to/from Cryostats U-Tube drg.	6
LAr to/from Cryostats U-Tube drg.	7
Condenser Inlet U-Tube drg.	8
LN2 supply to Condensers Model	9
Condenser Outlet U-Tube Model	10
LAr from Tanker U-Tube Model	11
LAr to Tanker U-Tube Model	12
GAr to/from Cryostats U-Tube Model	13
LAr to/from Cryostats U-Tube Model	14
Condenser Inlet U-Tube Model	15
Measured Bayonet Displacements	16
Argon U-Tube Stress Analysis Data	17, 18
Bayonet Assembly	19
Model Y-Valve w/ANSYS	20, 21
U-Tube Stresses	22, 23
LN2 supply to Condensers Node Locations, Inner	24
LN2 supply to Condensers Node Locations, Outer	25
Condenser Outlet U-Tube Node Locations, Inner	26
Condenser Outlet U-Tube Node Locations, Outer	27
LAr from Tanker U-Tube Node Locations, Inner	28
LAr from Tanker U-Tube Node Locations, Outer	29
LAr to Tanker U-Tube Node Locations, Inner	30
LAr to Tanker U-Tube Node Locations, Outer	31
GAr to/from Cryostats U-Tube Node Locations, Inner	32
GAr to/from Cryostats U-Tube Node Locations, Outer	33
LAr to/from Cryostats U-Tube Node Locations, Inner	34
LAr to/from Cryostats U-Tube Node Locations, Outer	35
Condenser Inlet U-Tube Node Locations, Inner	36
Condenser Inlet U-Tube Node Locations, Inner Profile	37
Condenser Inlet U-Tube Node Locations, Outer	38
Condenser Inlet U-Tube Node Locations, Outer Profile	39
A&N Corp. Vacuum Couplings	40
Single Case Comparison of Various Analytical Approaches	41

Stresses at Bayonet End Weldment 42, 43
Max. Bending Moment for V-Band Coupling 44
U-Tube Transfer Line Heat Leak 45

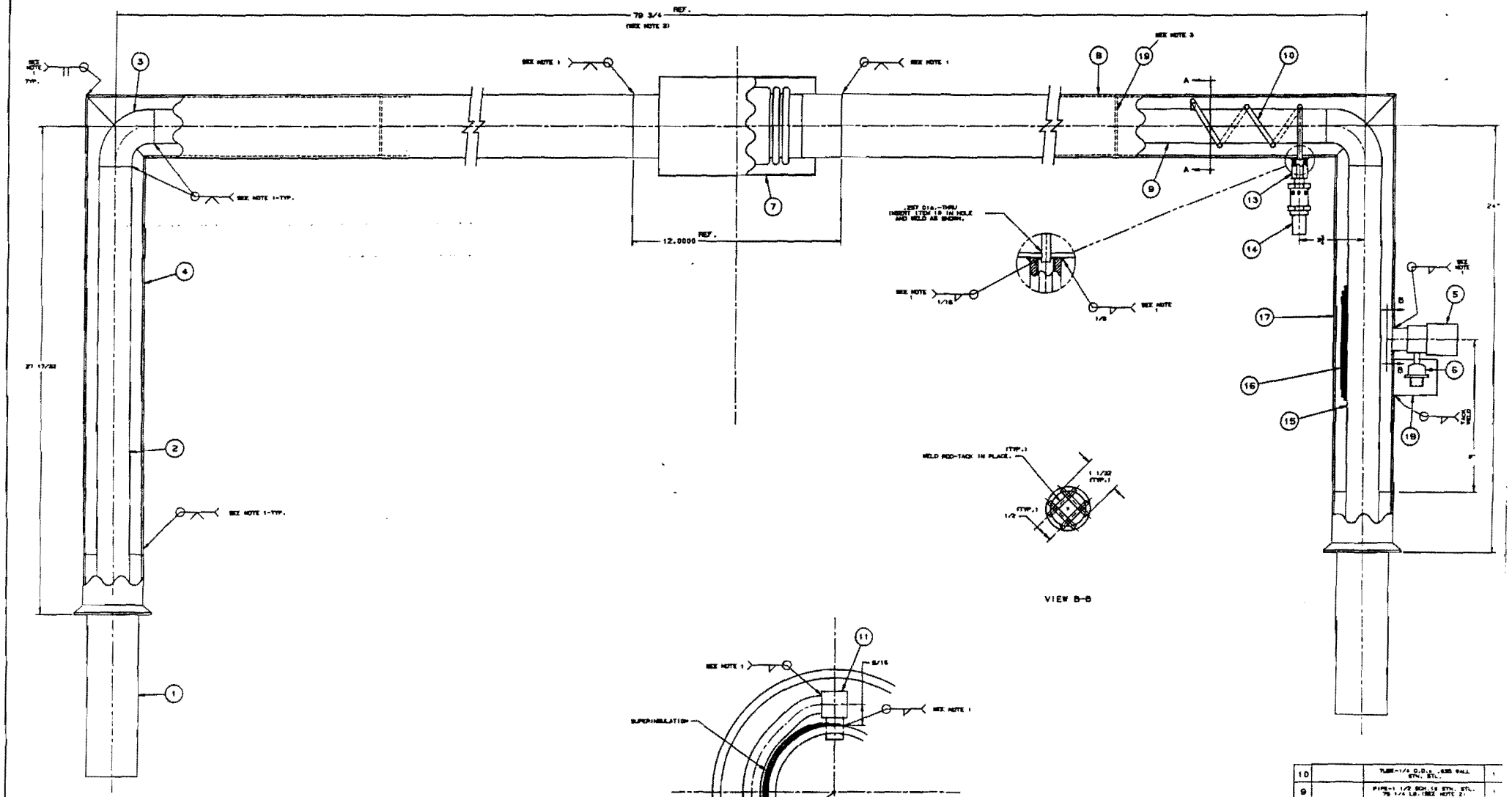

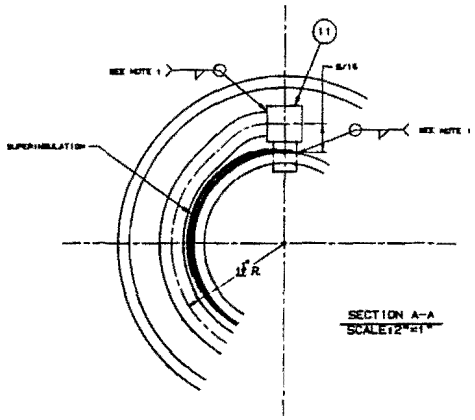

SECTION A-A
SCALE:2"=1"

#1

NOTE 1

1. VACUUM TESTING LEAK SHALL BE DETECTABLE ON THE MOST SENSITIVE SCALE OF A HELIUM LEAK DETECTOR WITH A MINIMUM SENSITIVITY OF 1X10-8 STAL CC/SEC.

2. FINAL DIMENSION TO BE DETERMINED AT FIELD.

3. SPACER(ITEM 19)-TYP REQUIRED PER ASSY. AS SHOWN.
(3/4" High Alum Blocks LAE)

19	MP-NF7722 or MP-XE6108	SPACER	2
18	3740.513-ME 273076	PROTECTOR	1
17		PIPE-3" SCH.10 STN. STL. 52 5/16 LB.	1
16		SUPERINSULATION-30 LAYERS	AR
15		PIPE-1 1/2 SCH.10 STN. STL. 31? LB.	1
14		RELIEF VALVE-CIRCLE SEAL 05120T-SS-100	1
13	3740.513-ME 273078	HEX COUPLING	1
12			
11	3740.513-ME 273077	1/4 TUBE ADAPTER	1
ITEM NO.	PART NO.	DESCRIPTION OR SIZE	QTY. REQ.

10		TUBE-1/4 O.D.x .035 WALL STN. STL.	1
9		PIPE-1 1/2 SCH.10 STN. STL. 79 1/4 LB. (SEE NOTE 2)	1
8		PIPE-3" SCH.10 STN. STL. 85 5/8 LB.	2
7		EXPANSION JOINT-HYSPAN 646723	1
6		VACUUM THERMOCOUPLE GAGE HASTINGS HCV-5P	1
5		VACUUM SEAL OFF VALVE-CV1 PV-1844-31	1
4		PIPE-3" SCH.10 STN. STL. 25 27/32 LB.	1
3		ELBOW-90 LB. RADIUS 1 1/2 SCH.10 STN. STL.	2
2		PIPE-1 1/2 SCH.10 STN. STL. 34 17/32 LB.	1
1		BAYONET-1 1/2 PIPE x 3 PIPE CRYOLAB-HCS3-812-BAP1	2

UNLESS OTHERWISE SPECIFIED		ORIGINATOR	K.DIXON
FRACTIONS	DECIMALS	ANGLES	DRAWN	M.GADEN
±	±	±	CHECKED	T.Peterson	12-5-91
1. FIT ON ALL CONNECTIONS 2. DO NOT SCALE DRAWING. 3. DIM. TO BE ON FINISH 4. DIM. ON ASSY. SUPPORTS			APPROVED		
			USED ON	
MATERIAL	SEE PARTS LIST			

FERMI NATIONAL ACCELERATOR LABORATORY
UNITED STATES DEPARTMENT OF ENERGY

D0 DETECTOR
ARGON DEWAR CONDENSER
LN_2 SUPPLY JUMPER -H_2 DEWAR

SCALE	FILEID	DRAWING NUMBER	REV
HALF		3740.513-ME-273075	

CREATED WITH CD/2000 VERSION 1.62

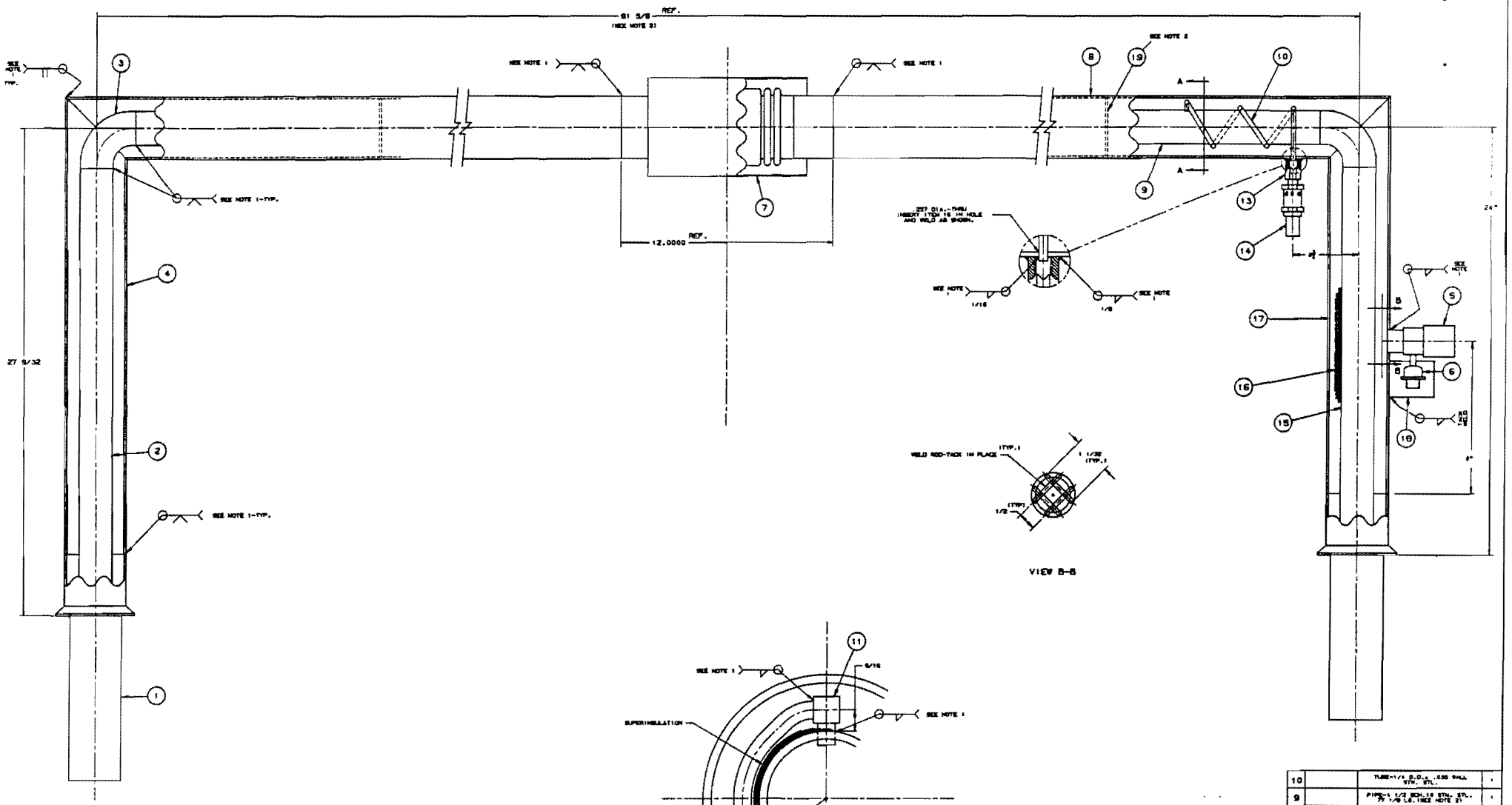

NOTE:

1. VACUUM TESTING LEAK SHALL BE DETECTABLE ON THE MOST SENSITIVE SCALE OF A HELIUM LEAK DETECTOR WITH A MINIMUM SENSITIVITY OF 10E-8 ATM. CC/SEC.
2. FINAL DIMENSION TO BE DETERMINED AT FIELD.
3. SPACER(ITEM 19)-TWO REQUIRED PER ASSY. AS SHOWN. (24" MIN. from original LVC)

19	MD-177172 or MD-172140	SPACER	2	
18	3740.513-MC 273078	PROTECTOR	1	
17		PIPE-3" SCH.10 STN. STL. 22 5/16 LB.	1	
16		SUPERINSULATION-20 LAYERS	AS REQ.	
15		PIPE-1 1/2 SCH.10 STN. STL. 31" LG.	1	
14		RELIEF VALVE-CIRCLE SEAL RS1207-20-100	1	
13	3740.513-MB 273076	HDI COUPLING	1	
12			1	
11	3740.513-MB 273077	1/4 TUBE ADAPTER	1	
ITEM NO.	PART NO.	DESCRIPTION OR SIZE	QTY. REQ.	

10		TUBE-1/4 O.D.x .035 WALL STN. STL.	1
9		PIPE-1 1/2 SCH.10 STN. STL. 77 1/8 LG.(SEE NOTE 2)	1
8		PIPE-3" SCH.10 STN. STL. 36 5/16 LG.	2
7		EXPANSION JOINT-HYSPAN 442723	1
6		VACUUM THERMOCOUPLE GAGE HASTINGS DV-6R	1
5		VACUUM SEAL OFF VALVE-CV1 RV-1046-31	1
4		PIPE-3" SCH.10 STN. STL. 25 15/32 LG.	1
3		ELBOW-90.LG. RADIUS 1 1/2 SCH.10 STN. STL.	2
2		PIPE-1 1/2 SCH.10 STN. STL. 34 9/32 LG.	1
1		BAYONET-1 1/2 PIPE x 3 PIPE CRYOLAB-KCB3-013-SHP1	2

UNLESS OTHERWISE SPECIFIED	ORIGINATOR: X.DIXON
FRACTIONS / DECIMALS / ANGLES	DRAWN: K.CADENA
± / ± / ±	CHECKED: T.P. ADLER 1-21-98
1. REMOVE ALL SHARP EDGES AND BURRS	APPROVED: 1/21/98
2. DO NOT SCALE DRAWING	USED ON:
3. DIM. TO BE IN INCHES	MATERIAL: SEE PARTS LIST
4. DIM. ALL AGAIN BEFORE	

FERMI NATIONAL ACCELERATOR LABORATORY
UNITED STATES DEPARTMENT OF ENERGY

D0-DETECTOR
CRYOSTAT CONDENSER
LN_2 SUPPLY JUMPER-N_2 DEWAR

SCALE: HALF | SHEET: | DRAWING NUMBER: 3740.513-ME-273070 | REV.

CREATED WITH CD/2000 VERSION 1.02

REV.	DESCRIPTION	DRAWN	DATE
		APPD	DATE

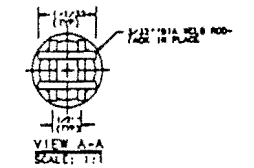

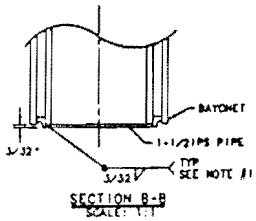

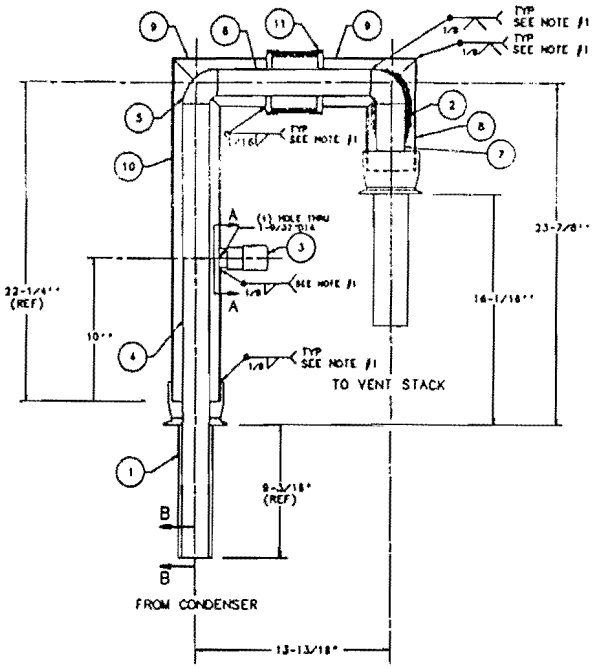

NOTES:
1.) VACUUM TEST: NO LEAK SHALL BE DETECTABLE ON THE MOST SENSITIVE SCALE OF A HELIUM LEAK DETECTOR WITH A MIN. SENSITIVITY OF 10^{-9} ATM cc/sec.
2.) ALL PARTS MUST BE FREE OF OIL, GREASE, OR ANY OTHER CONTAMINANTS PRIOR TO ANY WELDING OR ASSEMBLY.
3.) ALL 1-1/2" PIPE BUTT WELDS TO HAVE AN INERT GAS (ARGON) PURGE ON THE INTERIOR OF THE PIPE DURING WELDING.
4.) COMPLETE INNER LINE MUST BE "SUPER-INSULATED"
5.) INNER LINE MUST BE SWABBED THOROUGHLY W/ALCOHOL AND RINSED A FINAL TIME W/DISTILLED WATER. ENDS MUST BE CAPPED.

ITEM	PART NO.	DESCRIPTION OR SIZE	QTY.
11	MD-278500	4"DIA BELLOWS FOR 3"-IPS PIPE	1
10	16KJ-0300	3"-IPS SCH 10 PIPE x 24 1/8	1
9	16KJ-0290	3"-IPS SCH 10 PIPE x 9 1/4	1
8	16KJ-0280	3"-IPS SCH 10 PIPE x 8"	1
7	16KJ-0270	1-1/2"-IPS SCH 10 PIPE x 15 1/4	1
6	16KJ-0260	1-1/2"-IPS SCH 10 PIPE x 10 1/4	1
5	1077-0100	1-1/2"-IPS SCH10-90°90 BUTT-WELD ELBOW	1
4	16KJ-0220	1-1/2"-IPS SCH10 PIPE x 21 1/4	1
3	GRI [illegible]-31	1"-PURGUE/VAC. MAGNET RELIEF	1
2		ALUMINIZED MYLAR SUPER INSULATION 30 LAYERS	6/ft
1	CRYOLAB [illegible]	MALE BAYONET 1-1/2" PIPE X 3" PIPE	1

PARTS LIST

UNLESS OTHERWISE SPECIFIED			ORIGINATOR	KELLY BIRCH	3/7/99
.XX	.XXX	ANGLES	DRAWN	C.D.CARR	3/7/99
± .01	± 1/32	±	CHECKED		
1. BREAK ALL SHARP EDGES 0.01 MAX.			APPROVED		
2. DO NOT SCALE DRAWING.			USED ON	20K GALLON ARGON STORAGE DEWAR	
3. DIMENSIONS MADE UPON ASST TO 80-1000					
4. DEL. ALL SHAR. DRAWING			MATERIAL	SEE PARTS LIST	

FERMI NATIONAL ACCELERATOR LABORATORY
UNITED STATES DEPARTMENT OF ENERGY

DO DETECTOR
ARGON DEWAR U-TUBES
GH2 from Condenser, 1-1/2" x 3" 4BSC

SCALE	FINISH	DRAWING NUMBER	REV.
1:4		3740.512-MD-278501	

CADFILE: 278501.DWG | CREATED WITH I-DEAS 4.0 | USER NAME: RICHARD

3

NOTES:
1.) VACUUM TEST: NO LEAK SHALL BE DETECTABLE ON THE MOST SENSITIVE SCALE OF A HELIUM LEAK DETECTOR WITH A MIN. SENSITIVITY OF 10^{-4} ATM cc/sec.
2.) ALL PARTS MUST BE FREE OF OIL, GREASE, OR ANY OTHER CONTAMINANTS PRIOR TO ANY WELDING OR ASSEMBLY.
3.) ALL 1-1/2" PIPE BUTT WELDS TO HAVE AN INERT GAS (ARGON) PURGE ON THE INTERIOR OF THE PIPE DURING WELDING.
4.) * = FIELD VERIFY DIMENSION
5.) COMPLETE INNER LINE MUST BE "SUPER-INSULATED"
6.) INNER LINE MUST BE SWABBED THOROUGHLY W/ALCOHOL AND RINSED A FINAL TIME W/DISTILLED WATER, ENDS MUST BE CAPPED.
7.) SEE DETAIL A FOR ITEMS 29-31

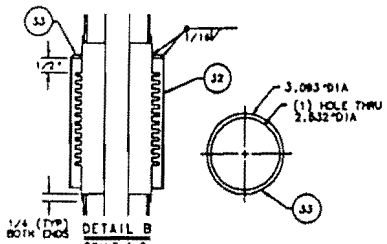

DETAIL B
SCALE 1:2

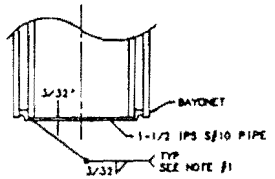

SECTION C-C
SCALE: 1:1

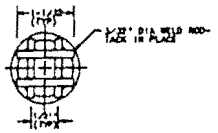

VIEW A-A
SCALE: 1:1

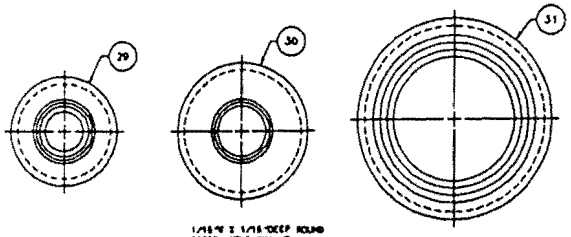

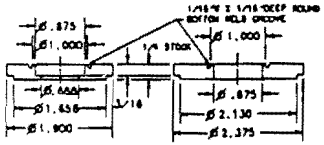

DETAIL A
SCALE: 1:1

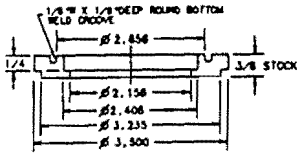

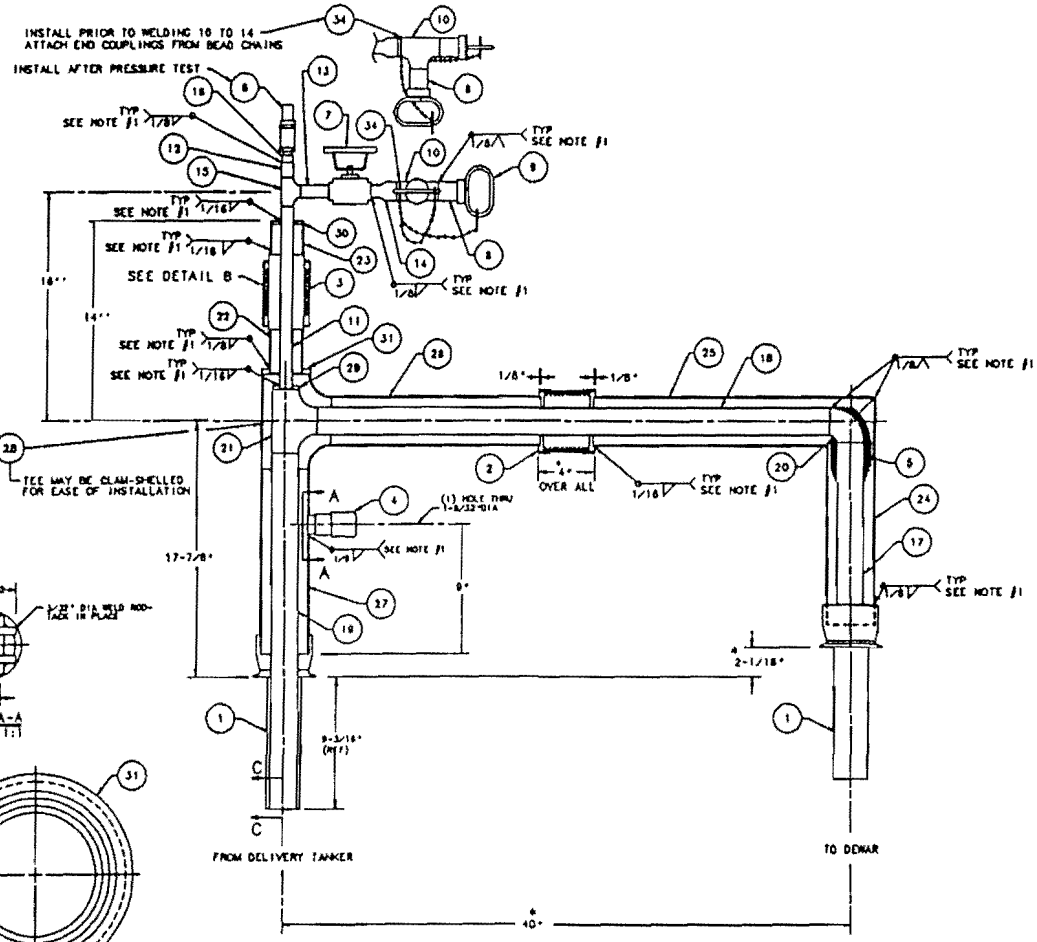

REV.	DESCRIPTION		

ITEM	PART NO.	DESCRIPTION OR SIZE	QTY.
34		1-1/2" SPLIT RING (KEY RING)	1
33		1/8" THK 304 SS COVER PLATE X 3-1/4" DIA ROUGH STOCK	1
32	1000-7400	[illegible]	1
31		3/8" THK 304 SS COVER PLATE X 3-3/4" DIA ROUGH STOCK	1
30		1/8" THK 304 SS COVER PLATE X 3-3/4" DIA ROUGH STOCK	1
29		1/8" THK 304 SS COVER PLATE X 3-1/4" DIA ROUGH STOCK	1
28	1077-6324	3" IPS SCH40 304 S.S. BUTT-WELD TEE	1
27	1053-[illegible]	3" IPS-SCH 10 304 SS PIPE X 11"	1
* 26	1053-[illegible]	3" IPS-SCH 10 304 SS PIPE X 14-1/4"	1
* 25	1053-[illegible]	3" IPS-SCH 10 304 SS PIPE X 19-7/8"	1
24	1053-[illegible]	3" IPS-SCH 10 304 SS PIPE X 18"	1
23	1053-[illegible]	3" IPS-SCH 10 304 SS PIPE X 3"	1
22	1053-[illegible]	3" IPS-SCH 10 304 SS PIPE X 3"	1
21	1077-[illegible]	1-1/2" IPS SCH40 304 S.S. BUTT-WELD TEE	1
20	1077-[illegible]	1-1/2" IPS SCH 304 SS-[illegible] BUTT-WELD CLOSE	1
19	1053-[illegible]	1-1/2" IPS-SCH 10 304 SS PIPE X [illegible]	1
18	1053-[illegible]	1-1/2" IPS-SCH 10 304 SS PIPE X [illegible]	1
17	1053-[illegible]	1-1/2" IPS-SCH 10 304 S.S. PIPE X [illegible]	1
16		1/2" NPT, 1000# HALF-COUPL [illegible]	1
15	1077-[illegible]	1/2" IPS SCH40 304 S.S. BUTT-WELD TEE	1
14		[illegible] 40 304 S.S. 1" X 1/2" [illegible] REDUCER	1
13	1053-[illegible]	1/2" IPS SCH40 304 S.S. PIPE X 3"	1
12	1053-[illegible]	1/2" IPS SCH40 304 S.S. PIPE X 3"	1
11	1053-[illegible]	1/2" IPS SCH40 304 S.S. PIPE X [illegible]	1
10		1" IPS SCH 40 304 S.S. BUTT-WELD TEE	1
9	HC-[illegible]	1" VACUUM PLUG WITH HANDLE	2
8	AIR CORPORATION [illegible]	304 S.S. VACUUM COUPLING	3
7	SWITZY [illegible]	S.S. 1/2" BALL VALVE	1
6	CIRCLE SEAL 01307-207-100	1/4" NPT SOLID VALVE	1
5		ALUMINIZED MYLAR SUPER INSULATION 35 LAYERS	A/R
4	[illegible]-31	VALVE, VAC SEAL OFF, VALVE-OFF	1
3	[illegible]	2" BELLOWS [illegible] PRECISION PRODUCTS	1
2	MD-[illegible]	[illegible] BELLOWS FOR 3" IPS PIPE	1
1	CRYOLAB [illegible]	BAYONET-1-1/2" PIPE X 3" PIPE	3

PARTS LIST

UNLESS OTHERWISE SPECIFIED .XX ±.01 .XXX ±.005 .XXXX ±.0005	ORIGINATOR	K. BIRCH	7/07/96
	DRAWN	C.B. CARR	7/07/96
	CHECKED		
1. BREAK ALL SHARP EDGES 125 MAX. 2. DO NOT SCALE DRAWING. 3. [illegible] 4. DEBURR ALL GROUND SURFACES	APPROVED		
	USED ON: 20K GALLON ARGON STORAGE DEWAR		
	MATERIAL: SEE PARTS LIST		

FERMI NATIONAL ACCELERATOR LABORATORY
UNITED STATES DEPARTMENT OF ENERGY

DO DETECTOR
ARGON DEWAR U-TUBES
LAr from Tanker, 1-1/2" x 3" 465LA

SCALE	FINISH	DRAWING NUMBER	REV.
1:4		3740.512-MD-278504	

CADFILE: 278504.DWG | CREATED WITH I-DEAS 4.0 | USER NAME: RICHARD

4

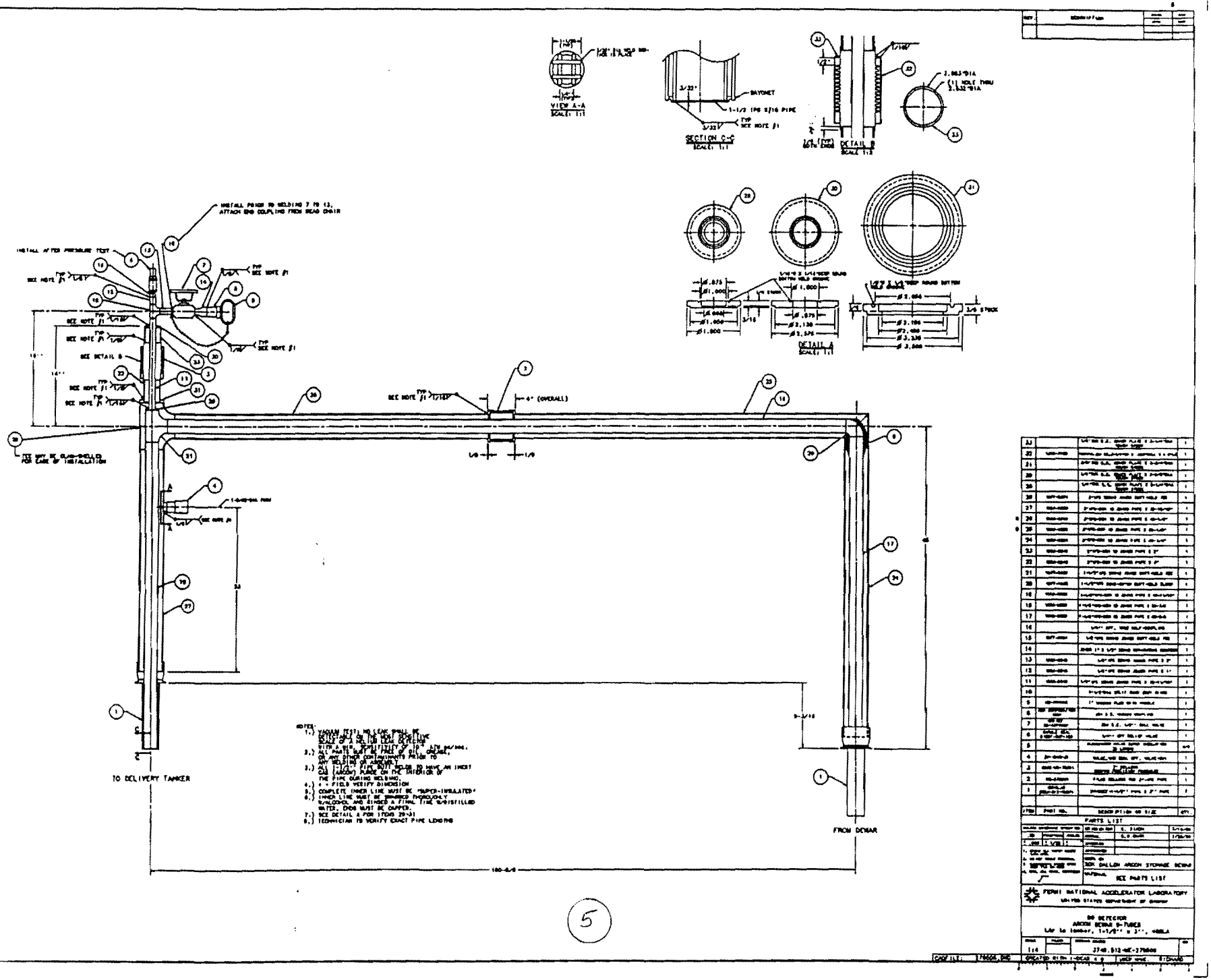
VIEW A-A
SCALE: 1:1
SECTION C-C
SCALE: 1:1
BAYONET
DETAIL B
SCALE: 1:2
DETAIL A
SCALE: 1:1
INSTALL PRIOR TO WELDING 7 TO 13, ATTACH END COUPLING FROM DEAD CHAIR
INSTALL AFTER PRESSURE TEST
SEE NOTE #1
SEE DETAIL B
4" (OVERALL)
TO DELIVERY TANKER
FROM DEWAR
NOTES:
1.) VACUUM TEST: NO LEAK SHALL BE DETECTABLE ON THE WEST SPECTRUM SCALE OF A HELIUM LEAK DETECTOR WITH A MIN. SENSITIVITY OF 10^-8 ATM CM/SEC.
2.) ALL PARTS MUST BE FREE OF OIL, GREASE, OR ANY OTHER CONTAMINANTS PRIOR TO ANY WELDING OR ASSEMBLY.
3.) ALL 1-1/2" PIPE BUTT WELDS TO HAVE AN INERT GAS (ARGON) PURGE ON THE INTERIOR OF THE PIPE DURING WELDING.
4.) 4 - FIELD VERIFY DIMENSION
5.) COMPLETE INNER LINE MUST BE "SUPER-INSULATED"
6.) INNER LINE MUST BE SWABBED THOROUGHLY W/ALCOHOL AND RINSED A FINAL TIME W/DISTILLED WATER. ENDS MUST BE CAPPED.
7.) SEE DETAIL A FOR ITEMS 29-31
8.) TECHNICIAN TO VERIFY EXACT PIPE LENGTHS
PARTS LIST
SEE PARTS LIST
FERMI NATIONAL ACCELERATOR LABORATORY
UNITED STATES DEPARTMENT OF ENERGY
D0 DETECTOR
ARGON DEWAR 9-TUBES
1:4
CADFILE:
CREATED WITH I-DEAS 4.0
USER NAME: RICHARD
5

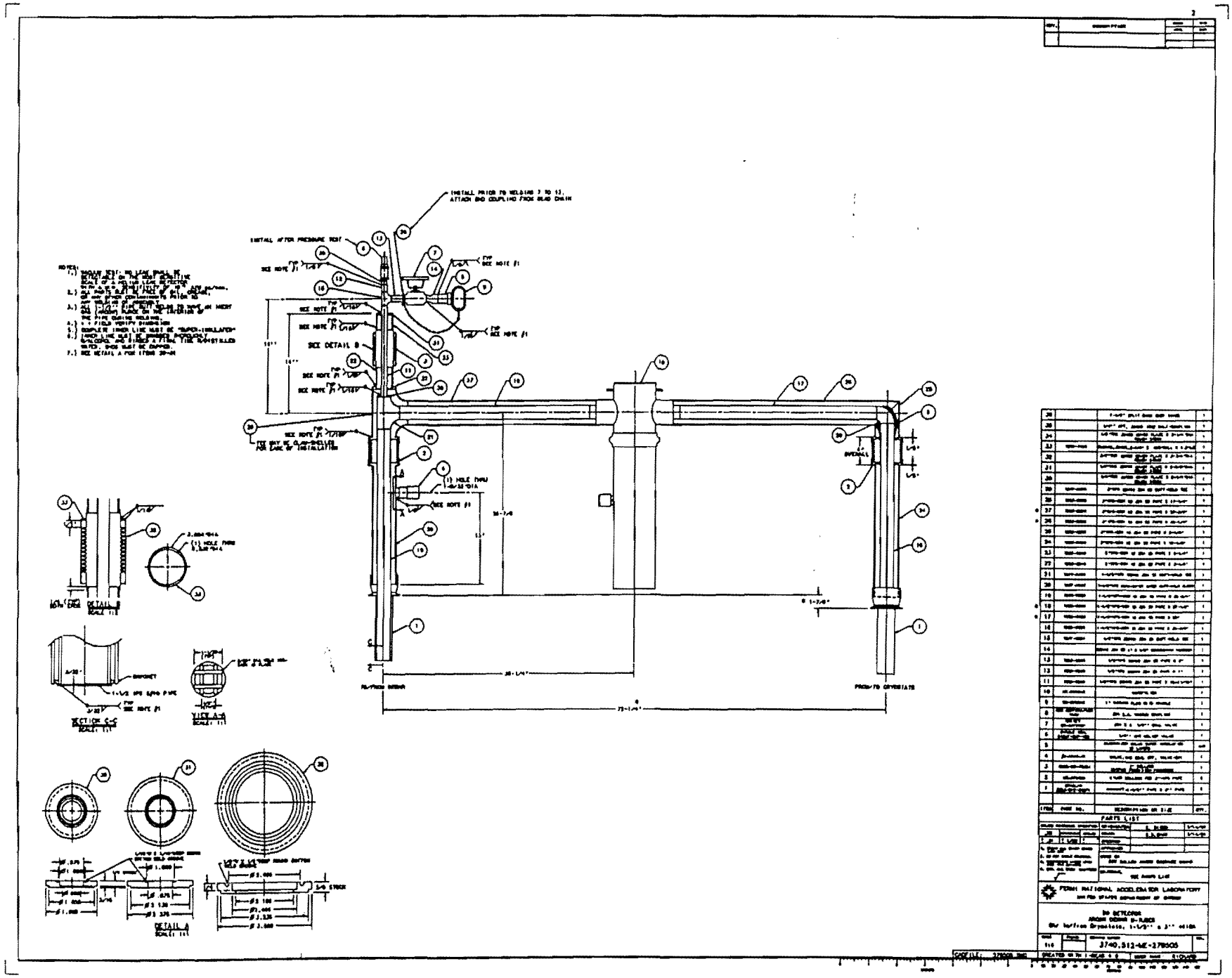

INSTALL PRIOR TO WELDING 7 TO 13, ATTACH END COUPLING FROM BEAD CHAIN
INSTALL AFTER PRESSURE TEST
SEE DETAIL B
SECTION C-C
VIEW A-A
DETAIL A
PARTS LIST
FERMI NATIONAL ACCELERATOR LABORATORY
3740.512-ME-278505

6

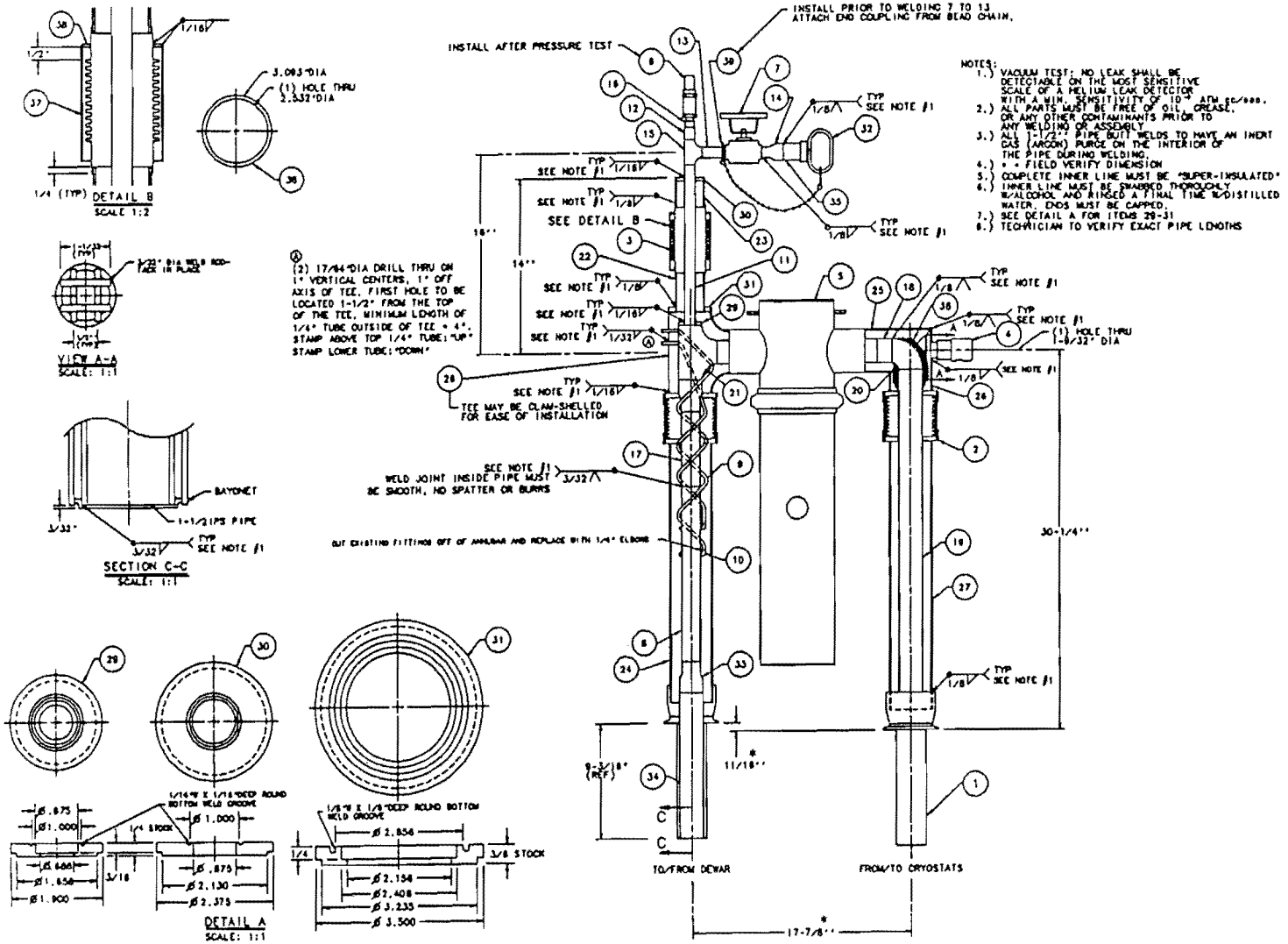

REV.	DESCRIPTION		
39		1-1/2" SPLIT RING (KEY RING)	1
38		1/8"THK S.S. COVER PLATE X 3-1/4"DIA ROUGH STOCK	1
37	[illegible]	[illegible]	1
36		ALUMINIZED MYLAR SUPER INSULATION 25 LAYERS	4/9
35	[illegible]	304 S.S. VACUUM COUPLING	1
34	[illegible]	1-1/2"-IPS-SCH 10 TP304 PIPE X 11-1/2"	1
33		1-1/2" X 1" CONCENTRIC REDUCER	2
32	[illegible]	1" VACUUM PLUG WITH HANDLE	1
31		3/8"THK S.S. COVER PLATE X 3-3/4"DIA ROUGH STOCK	1
30		1/4"THK S.S. COVER PLATE X 3-3/4"DIA ROUGH STOCK	1
29		1/4"THK S.S. COVER PLATE X 3-1/4"DIA ROUGH STOCK	1
28	[illegible]	3"-IPS SCH10 S.S. BUTT-WELD TEE	1
27	[illegible]	3"-IPS-SCH 10 TP304 PIPE X 10-7/8"	1
26	[illegible]	3"-IPS-SCH 10 TP304 PIPE X 6"	1
* 25	[illegible]	3"-IPS-SCH 10 TP304 PIPE X 5-7/16"	1
24	[illegible]	3"-IPS-SCH 10 TP304 PIPE X 10-3/16"	1
23	[illegible]	2"-IPS-SCH 10 TP304 PIPE X 3-1/4"	1
22	[illegible]	2"-IPS-SCH 10 TP304 PIPE X 3-1/4"	1
21	[illegible]	1-1/2"IPS SCH10 S.S. BUTT-WELD TEE	1
20	[illegible]	1-1/2"IPS SCH10-90°SR BUTT-WELD ELBOW	1
19	[illegible]	1-1/2"-IPS-SCH 10 TP304 PIPE X 20-7/16"	1
* 18	[illegible]	1-1/2"-IPS-SCH 10 TP304 PIPE X 1-1/4"	1
17	[illegible]	1"-IPS-SCH 10 TP304 PIPE X 8"	1
16		1/4" NPT, 150# HALF COUPLING	1
15	[illegible]	1/2"IPS SCH10 S.S. BUTT-WELD TEE	1
14		1" X 1/2" CONCENTRIC REDUCER	1
13	[illegible]	1/2"IPS SCH10 S.S. PIPE X 3"	1
12	[illegible]	1/2"IPS SCH10 S.S. PIPE X 1"	1
11	[illegible]	1/2"IPS SCH10 S.S. PIPE X 12"	1
10		ELBOW, TP304, 1/4"OD	2
9	[illegible]	TUBING, TP304, 1/4"OD	4/9
8	[illegible]	1" SCH10 FLOW SENSOR	1
7	[illegible]	S.S. 1/2" BALL VALVE	1
6	CIRCLE SEAL [illegible]	1/4" NPT RELIEF VALVE	1
5	[illegible]	CRYOFILTER	1
4	[illegible]	VALVE, VAC SEAL OFF, VALVE-CRY	1
3	[illegible]	3" BELLOWS HYSPAN PRECISION PRODUCTS	1
2	[illegible]	4"LNG BELLOWS FOR 3"-IPS PIPE	2
1	CRYOLAB [illegible]	BAYONET-1-1/2" PIPE X 3" PIPE	2
ITEM	PART NO.	DESCRIPTION OR SIZE	QTY.

PARTS LIST

ORIGINATOR	KELLY BIRCH		7/7/99
DRAWN	C.D.CARR		7/7/99
CHECKED			
APPROVED			
USED ON	30K GALLON ARGON STORAGE DEWAR		
MATERIAL	SEE PARTS LIST		

FERMI NATIONAL ACCELERATOR LABORATORY
UNITED STATES DEPARTMENT OF ENERGY

DO DETECTOR
ARGON DEWAR U-TUBES
LAr to/from Cryostats, 1-1/2" x 3" 440LA

SCALE	FILMED	DRAWING NUMBER	REV.
1:4		3740.512-MD-278502	

CADFILE: 278502.DWG | CREATED WITH I-DEAS 4.0 | USER NAME: RICHARD

7

REV.	DESCRIPTION	DRAWN	DATE
		APPD	DATE

NOTES:
1.) VACUUM TEST: NO LEAK SHALL BE DETECTABLE ON THE MOST SENSITIVE SCALE OF A HELIUM LEAK DETECTOR WITH A MIN. SENSITIVITY OF 10^{-8} ATM cc/sec.
2.) ALL PARTS MUST BE FREE OF OIL, GREASE, OR ANY OTHER CONTAMINANTS PRIOR TO ANY WELDING OR ASSEMBLY.
3.) ALL 1-1/2" PIPE BUTT WELDS TO HAVE AN INERT GAS (ARGON) PURGE ON THE INTERIOR OF THE PIPE DURING WELDING.
4.) * = FIELD VERIFY DIMENSION
5.) COMPLETE INNER LINE MUST BE "SUPER-INSULATED"
6.) INNER LINE MUST BE SCRUBBED THOROUGHLY W/ALCOHOL AND RINSED A FINAL TIME W/DISTILLED WATER. ENDS MUST BE CAPPED.

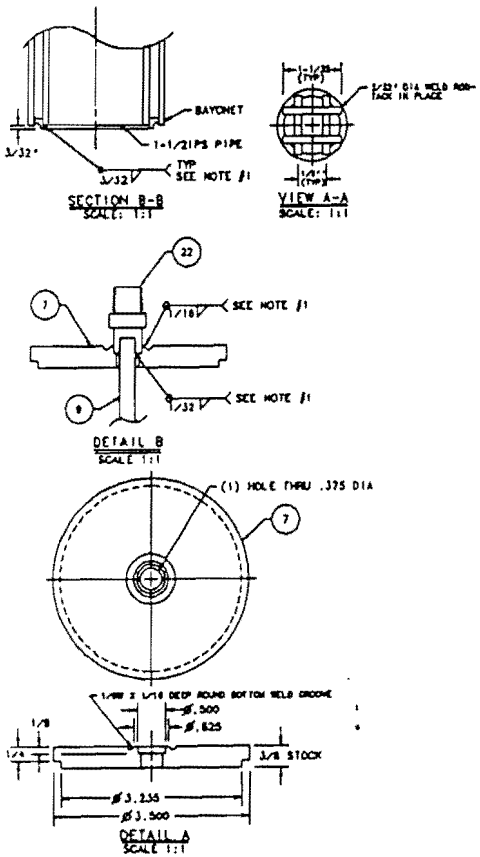

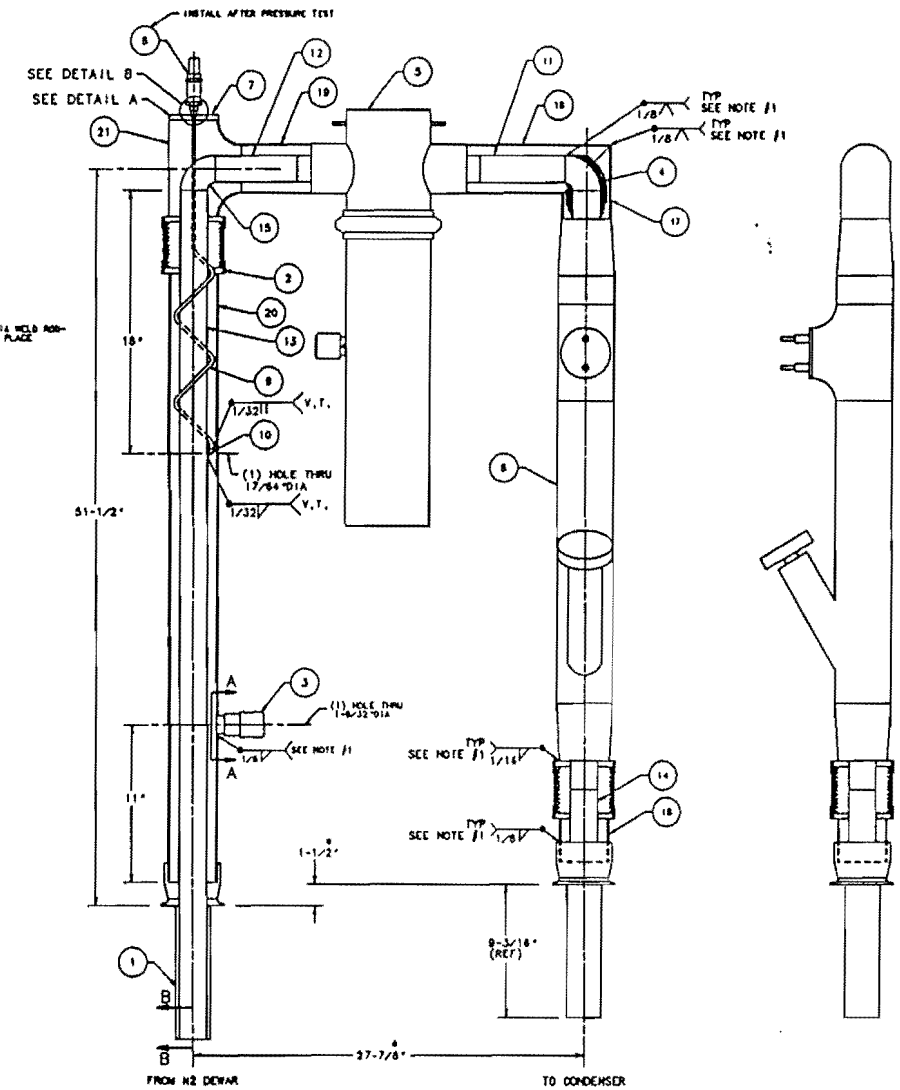

ITEM	PART NO.	DESCRIPTION OR SIZE	QTY.
22	CAJON SS-4-TSP-1-4	1/4 FUNE SOCKET WELD VALVE CONNECTOR	1
21	1077-6134	3" IPS SCH40 S.S. BUTT-WELD TEE	1
20	1083-0000	3"-IPS-SCH 10 TP304 PIPE X 42-1/2"	1
* 19	1083-0000	3"-IPS-SCH 10 TP304 PIPE X 6"	1
* 18	1083-0000	3"-IPS-SCH 10 TP304 PIPE X 18-1/4"	1
17	1083-0000	3"-IPS-SCH 10 TP304 PIPE X 9-1/4"	1
16	1083-0000	3"-IPS-SCH 10 TP304 PIPE X 2"	1
15	1077-0102	1-1/2" IPS SCH40-90° BUTT-WELD ELBOW	1
14	1083-0030	1-1/2"-IPS-SCH 10 TP304 PIPE X 10-3/4"	1
13	1083-0030	1-1/2"-IPS-SCH 10 TP304 PIPE X 20-1/4"	1
* 12	1083-0030	1-1/2"-IPS-SCH 10 TP304 PIPE X 9-1/2"	1
* 11	1083-0030	1-1/2"-IPS-SCH 10 TP304 PIPE X 6"	1
10		ELBOW, TP304, 1-1/2"	2
9	1000-7010	FLANGE, TP304, 1-1/2"	4-9
8	NE-171011	LN2 COOLING LOOP FLOWMETER	1
7		3/8" THK S.S. COVER PLATE X 3-3/4" DIA ROUGH STOCK	1
6	CIRCLE SEAL B120T-20P-150	1/4" NPT RELIEF VALVE	1
5	NE-000040	DEWAR VENT	1
4		ALUMINIZED MYLAR SUPER INSULATION 20 LAYERS	1/4
3	GH JV-1046-31	VALVE, VAC SEAL OFF, VALVE	1
2	NE-170000	6 FLAN BELLOWS FOR 3"-IPS PIPE	1
1	OPTOLAB JCSL-01-0001	BAYONET-1-1/2" PIPE X 3" PIPE	1

PARTS LIST

ORIGINATOR	K. DIXON		7/7/99
DRAWN	C.S. CARR		7/10/99
CHECKED			
APPROVED			

USED ON: 20K GALLON ARGON STORAGE DEWAR

MATERIAL: SEE PARTS LIST

FERMI NATIONAL ACCELERATOR LABORATORY
UNITED STATES DEPARTMENT OF ENERGY

D0 DETECTOR
ARGON DEWAR U-TUBES
LN2 to Condenser, 1-1/2" x 3" 442LN

SCALE 1:4 | FOLDED | DRAWING NUMBER 3740.512-MD-278503 | REV.

CADFILE: 278503.DWG | CREATED WITH I-DEAS 4.0 | USER NAME: RIOWRD

(8)

KD
10Apr89

N_2 Dewar U-Tube Model, #1

443, 444LN

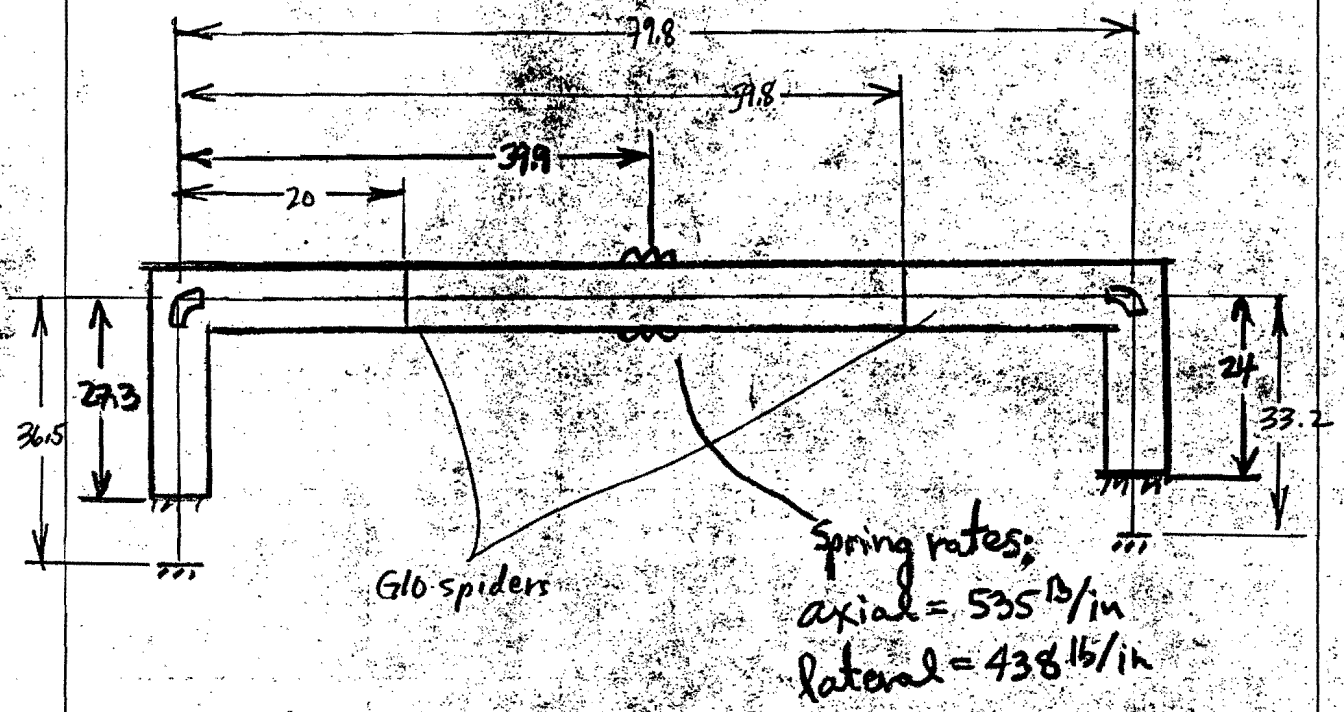

Not to scale.
All dims in inches
All outer piping 3" sch10,
inner piping 1½" Sch10.

Condenser Outlet Model, #2

466E

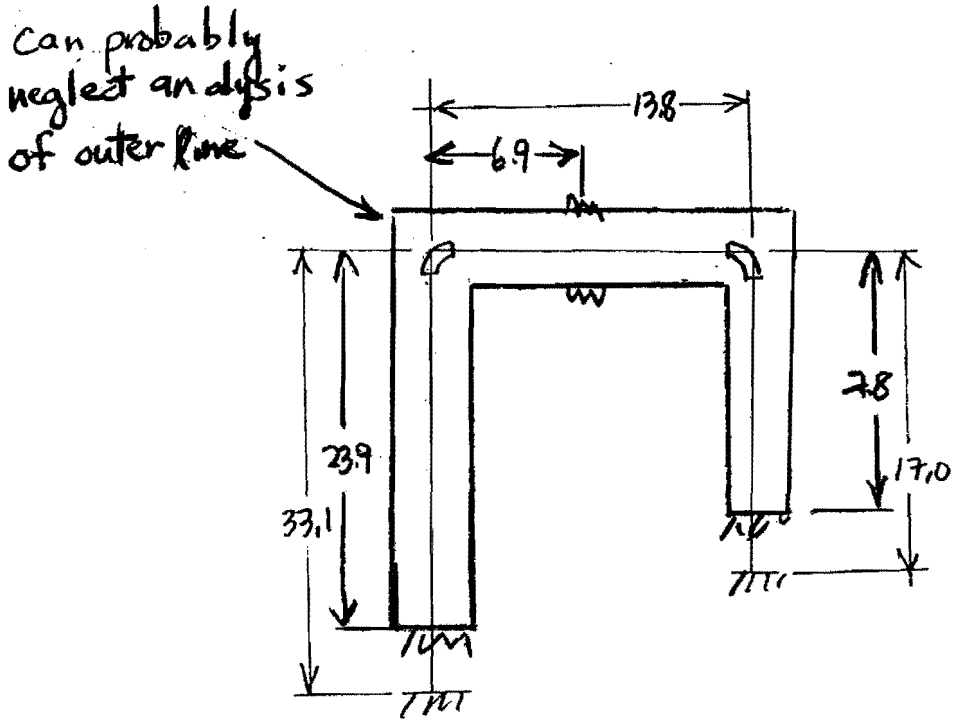

Not scale
All dims in inches.
Outer piping 3" sch 10,
inner piping 1½" sch 10

LAr from Tanker Model, #3

465 LA

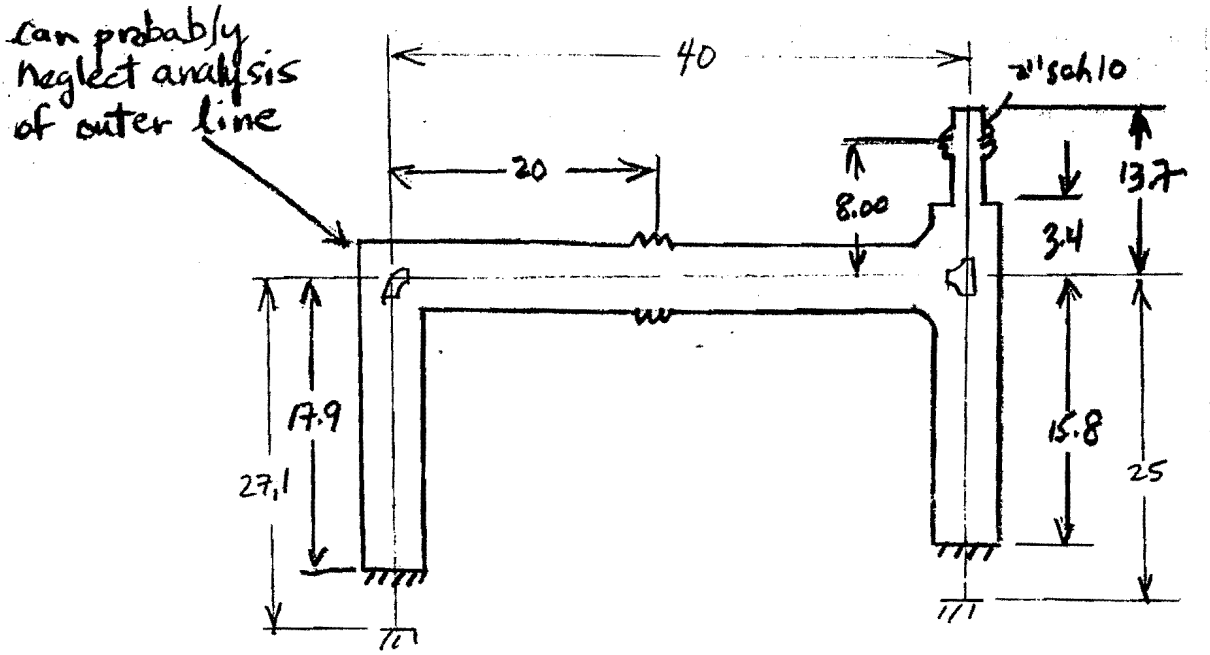

Not to scale.
All dims in inches.
Outer piping 3" sch 10, inner piping 1½ sch 10 except where noted.

LAr to Tanker Model, #4

460LA

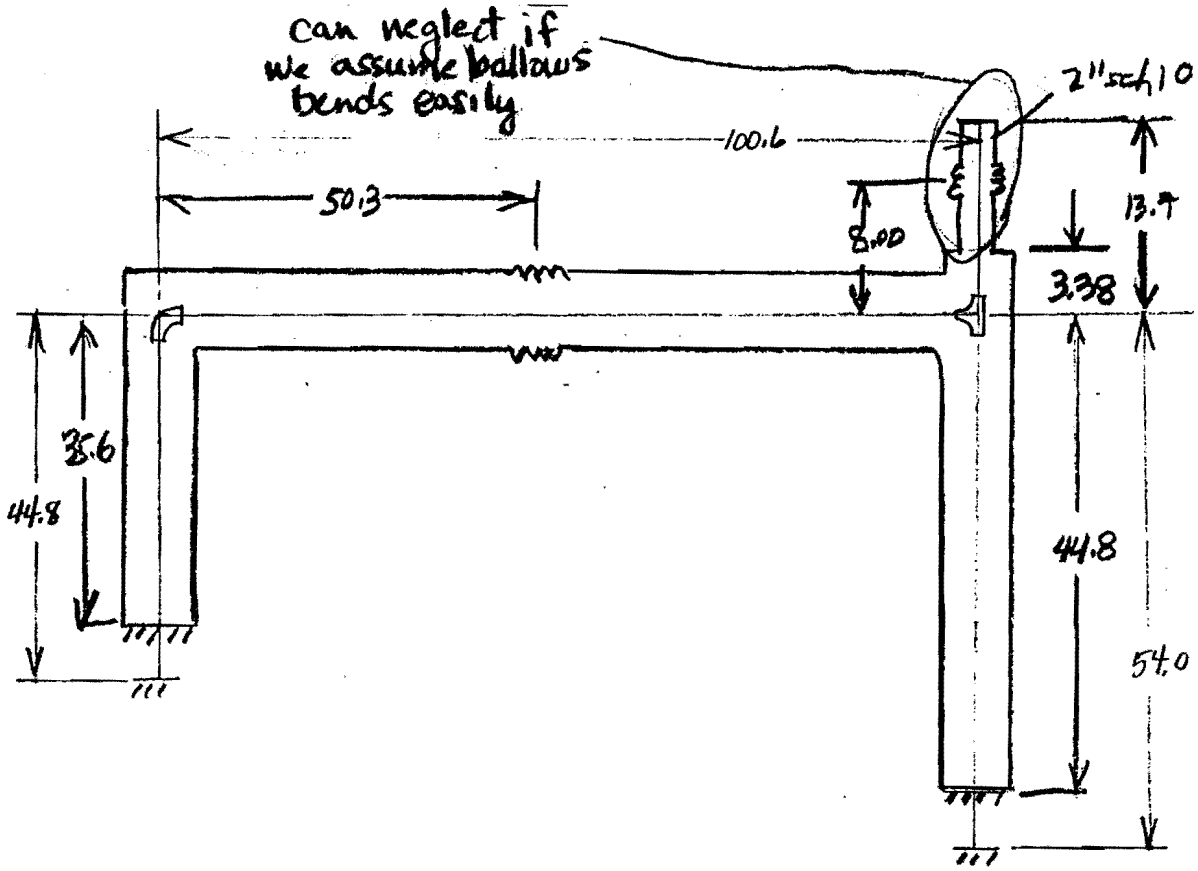

Not to scale.
All dims in inches.
Outer piping 3" Sch 10,
inner piping 1½" Sch. 10
except where noted.

GAr to/from Cryostats Model, #5

441 GA

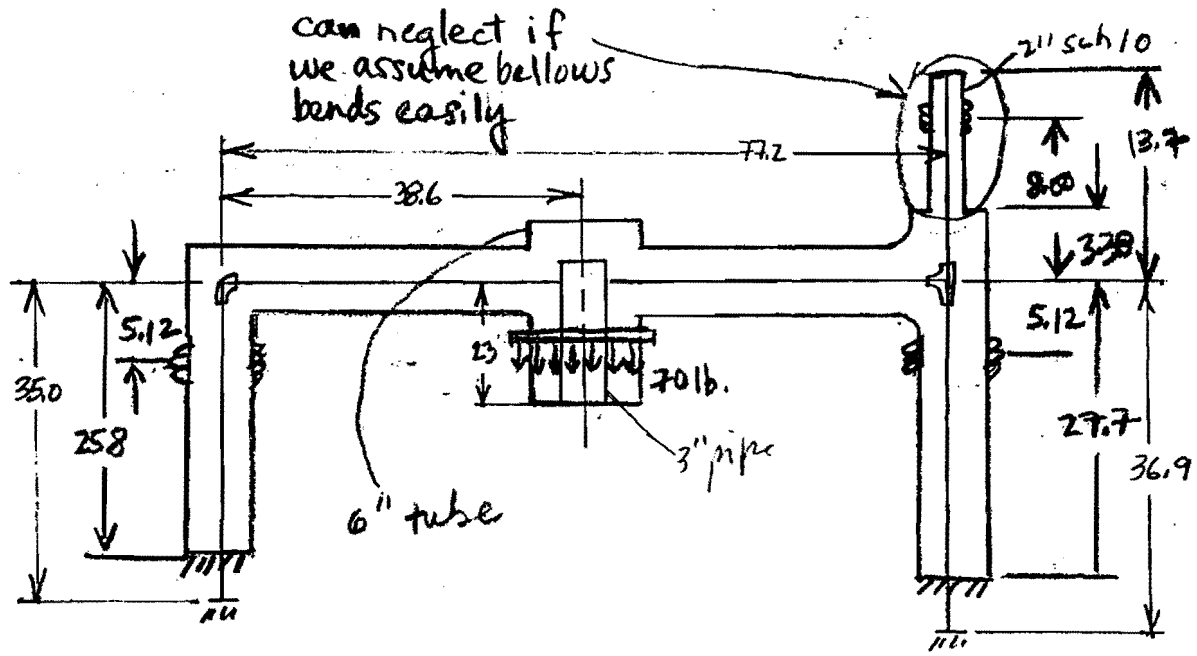

Not to scale.
All dims in inches
Outer piping 3" sch 10,
inner piping 1½" sch 10
except where noted.

LAr to/from Cryostats Model, #6

440LA

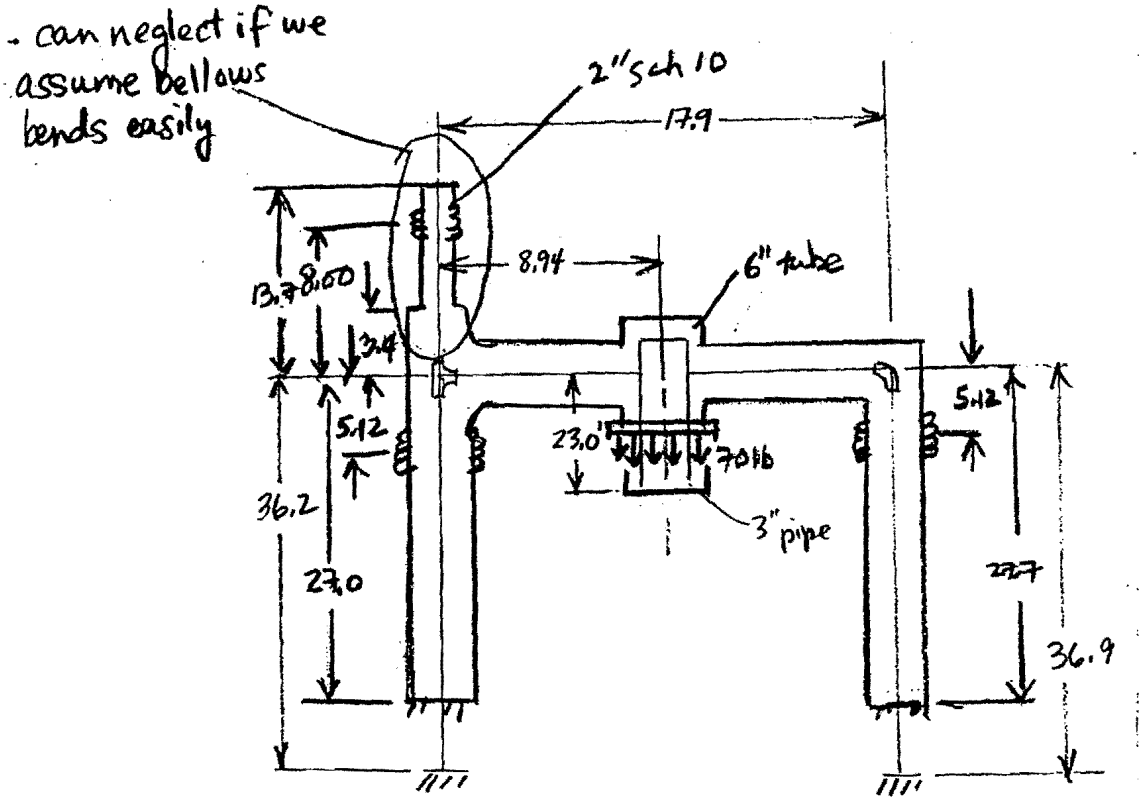

Not to scale.
All dims in inches
Outer piping 3" sch 10,
inner piping 1½ sch 10
except where noted.

Condenser Inlet Model, # 7

442 LN

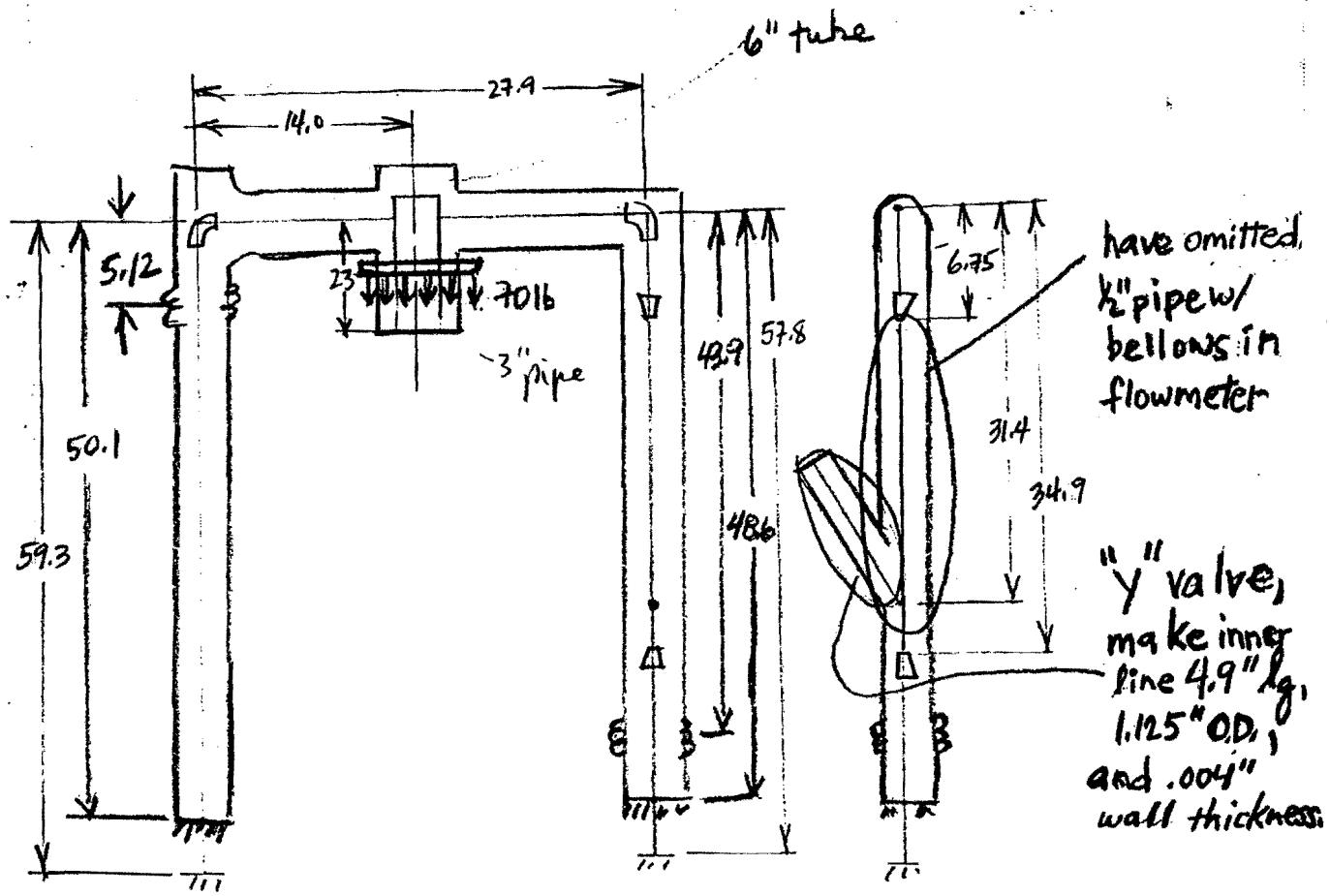

Not to scale
All dims in inches
Outer piping 3" sch 10,
inner piping 1½" sch 10
except where noted.

Measured Bayonet Angular Displacements

Pipe Run	Leg	U-Tube Description	Theta(x)	Theta(z)
2DB	R	GN2 FROM CONDENSER	-0.3	0.2
	L		-0.5	0.3
3DB	R	LAr FROM TANKER	-0.3	0.2
	L		-0.2	-0.2
4DB	R	LAr TO TANKER	0.1	-0.4
	L		-0.3	-0.1
5D,5DB	R	GAr/CRYOSTATS	-0.4	0.1
	L		-0.1	-0.8
6D,6DB	R	LAr/CRYOSTATS	0.1	0.2
	L		-0.1	-0.4
7D,7DB	R	LN2 TO CONDENSER	0.3	-0.6
	L		-0.4	0.2

Argon U-Tube Stress Analysis Data

Stainless Steel, TP304

elastic modulus.....29E6 psi
expansion coefficient.....79E-7 $^{o}R^{-1}$
cooldown temperature range.....380 ^{o}R

G-10

expansion coefficient.....55E-7 $^{o}R^{-1}$

1-1/2 in. NPS, sch 10 pipe

outer diameter.....1.900 in
thickness.....0.109 in
moment of inertia.....0.247 in^4
weight of pipe.....2.08 lb/ft
weight of argon.....1.35 lb/ft
weight of nitrogen..... 0.777 lb/ft

1-1/2 in. NPS, sch 10 fittings

90 deg., s.r. elbow, radius of curvature.....1.50 in
eccentric reducer to 3/4 in. NPS length.....2.50 in
tee, midpoint to end length.....2.25 in
thickness.....0.109 in

3 in. NPS, sch 10 pipe

outer diameter.....3.500 in
thickness.....0.120 in
moment of inertia.....1.822in^4
weight of pipe.....4.33 lb/ft

3 in. NPS, sch 10 fittings

tee, midpoint to end length.....3.38 in

3/4 in. NPS, sch 40 pipe

outer diameter.....1.050 in
thickness.....0.113 in
moment of inertia.....0.0370in^4
weight of pipe.....1.13 lb/ft
weight of argon.....0.323 lb/ft
weight of nitrogen.....0.187 lb/ft

1/2 in. NPS, sch 40 pipe

outer diameter.....0.840 in
thickness.....0.109 in
moment of inertia.....0.0171in^4
weight of pipe.....0.671 lb/ft
weight of argon.....0.185 lb/ft
weight of nitrogen.....0.107 lb/ft

6 in. OD tube

thickness.....0.120 in
moment of inertia.....4.94in^4

Pipe bellows

2 in NPS spring rate.....290 lb/in
3 in. NPS spring rate (braided).....750 lb/in

U-Tube Bayonet Assembly

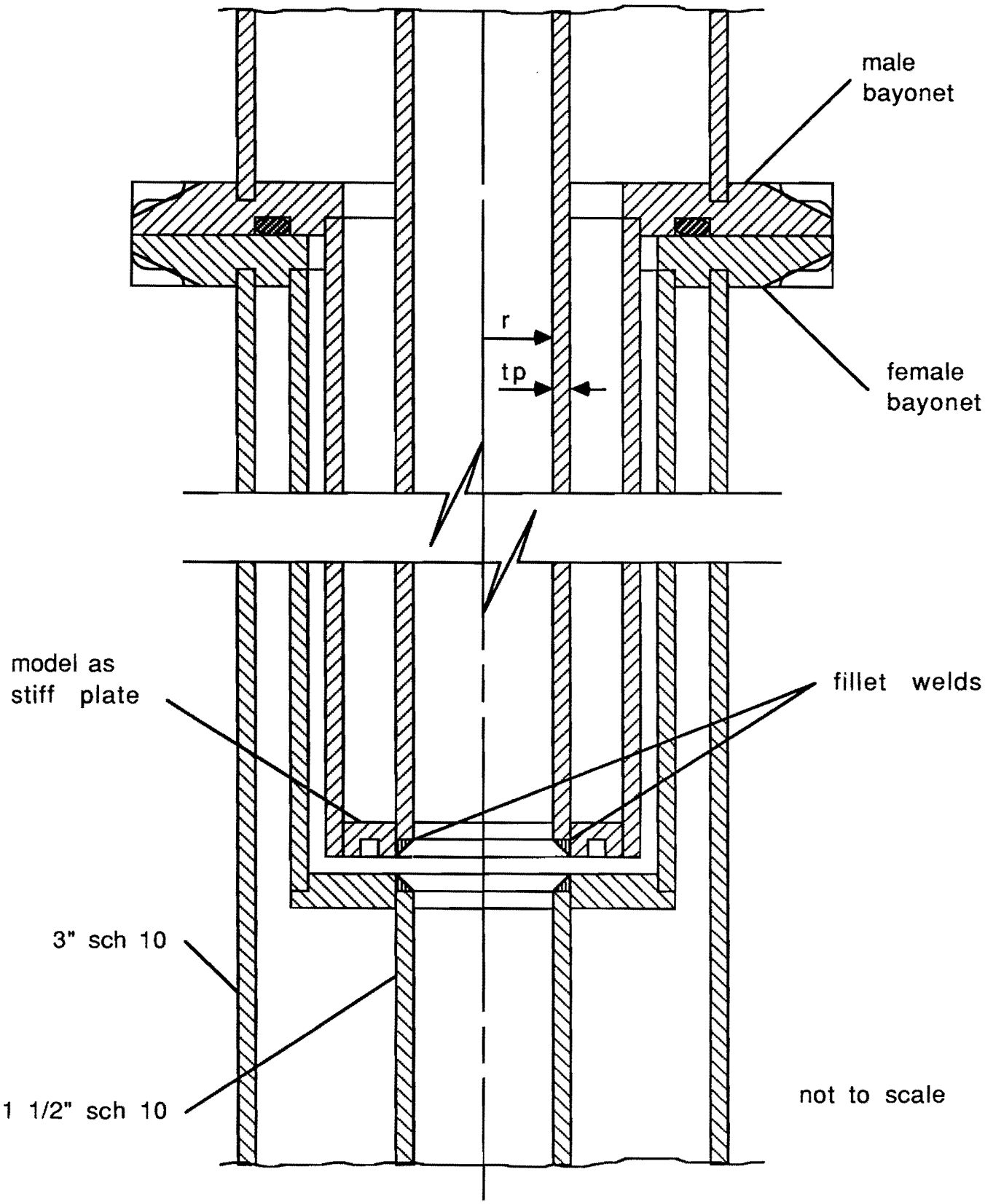

Model Y-valve w/ ANSYS

KD
18 May 89

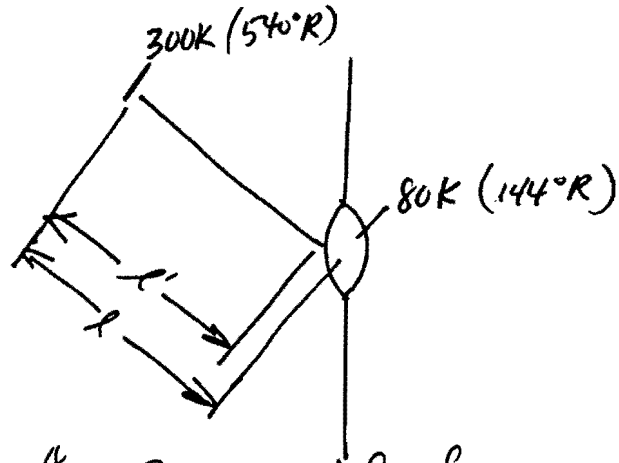

if we assume the same Δl for a bar at 80K as that of a bar with the above gradient, then $l_{80} = \frac{1}{2} l = 4.9$ in

$$F = \frac{3 E I y}{l^3} = \frac{3 E_{80} I_{80} y_{80}}{l_{80}^3}$$

$E = E_{80}$, $y = y_{80}$

$$I_{80} = \left(\frac{l_{80}}{l}\right)^3 I$$

$$= \left(\frac{1}{2}\right)^3 I \qquad I = \frac{\pi}{64}\left(d_o^4 - d_i^4\right)$$

$$= \frac{I}{8}$$

$$\frac{\pi}{64}\left(d_o^4 - d_{i_{80}}^4\right) 8 = \frac{\pi}{64}\left(d_o^4 - d_i^4\right)$$

$$-8 d_{i_{80}}^4 = \cancel{7 d_i^4} - 7 d_o^4 - d_i^4$$

$$d_{i_{80}}^4 = \frac{7d_o^4 + d_i^4}{8}$$

$$d_{i_{80}} = \left(\frac{7d_o^4 + d_i^4}{8}\right)^{1/4} \qquad d_o = 1.125 \text{ in}, \quad d_i = 1.055 \text{ in}$$

$$= 1.117 \text{ in}$$

$$t = (1.125 - 1.117)/2$$

$$= 0.004 \text{ in}$$

$\therefore$ Model new pipe w/ 4.9 in length, 1 1/8" O.D., t = .004 in, uniform temp of 80K. There will be high localized stresses at valve body due to model — these will have to be reexamined using real (non-temp adjusted) dimensions.

For 1/2" sch 40 standoffs,

$$d_i = \left[\frac{7(0.84)^4 + (0.622)^4}{8}\right]^{1/4}$$

$$\begin{array}{r} .84 \\ .218 \\ \hline .622 \end{array}$$

$$= 0.821$$

$$t = .009 \text{ in}$$

U-Tube Stresses

Pipe Run	*Date*	*Max. stresses, nodes*	*Max. XZ Moments, nodes*
1B	6/14/89		**2600, 1 2400, 10**
2B	6/14/89		970, 1 **1780, 8** 330, 13 810, 18
2DB	6/14/89		**4500, 1 2200, 8** 330, 13 810, 18
3B	6/14/89	23100, 12^ 53400, 9^ 251000, 3^	**3200, 1 1500, 8** 180, 13 **1100, 18**
3DB	6/14/89	34300, 12^ 92200, 9^ 403000, 3^	350, 1 340, 13 **2900, 8 2300, 18**
4B	6/14/89	23200, 12^ 51700, 9^ 241000, 3^	**2700, 1** 250, 8 **1400, 13 3000, 18**
4DB	6/14/89	13100, 12^ 84200, 3^	**2400, 1 2800, 8** **1500, 13 1600, 18**
5 -	6/14/89	13000, 5.5 13700, 6 13700, 6 13900, 6.5 13500, 7 49100, 13^ 132000, 10^ 580000, 8^	**3200, 1 2600, 9** **1600, 14 1500, 22**
5B	6/14/89	53600,13^ 135000, 10^ 624000, 8^	**2600, 1 2000, 9** **1500, 14 2600, 22**
5D	6/14/89	21700, 1 12800, 9 42800, 13^ 122000, 10^ 517000, 8^	**5600, 1 3300, 9** **4000, 14 2200, 22**
5DB	6/14/89	23300, 1 47000,13^ 125000,10^ 559000, 8^	**6000, 1 3200, 9** **4300, 14 2300, 22**
6 -	6/14/89	22600, 30 23200, 5 22000, 5.5 16300, 6 23500, 31 30900, 10^ 13000, 8 53400, 13^ 15200, 24 14800, 18 **45100, 3**	**1500, 1 1500, 14** 250, 8 290, 22
6B	6/14/89	14400, 13^ 36900, 10^	560, 1 110, 9

		161000, 8^	40, 14 710, 22
6D	6/14/89	17000, 1 22300, 30 **26700, 5 26000, 5.5** 20600, 6 23800, 31 34400, 10^ 16900, 12 21400, 9 19000, 8 71100, 8^ 15900,18 15800,18 **45400, 3**	**3900, 1 1300, 9** **2000, 14** 160, 22
6DB	6/14/89	19000, 13^ 45100, 10^ 207000, 8^	**2700, 1** 890, 9 **5100, 14 3700, 22**
7	6/14/89	**33600, 36 27700, 5** **26600, 5.5 32400, 37** 14600, 6.5 22000,6 14600, 12 18600, 12.5 19500, 13 21100, 16 19800, 25 16300, 18 391000, 14^ 64100, 31^ **57300, 3 30900, 14**	**1600, 1 3500, 18** **1800, 21 1700, 30**
7B	6/14/89	44500, 14^ 46100, 32^	380, 1 62, 18 270, 21 510, 30
7D	6/14/89	17300, 1 18500, 6.5 **31500, 5** **30500, 5.5 26000, 6** 16500, 12 20600, 12.5 21500, 13 23700, 16 **28700, 14 32900, 19** **27900, 18 32800, 37** 17900, 20 362000, 14^ 61300, 31^ 385000, 32^ **33600, 36 57600, 3** 20700, 40 19900, 25	**4100, 1 6500, 18** **1700, 21 2800, 30**
7DB	6/14/89	129000, 14^ 34100, 31^ 157000, 32^	**3200, 1 7500, 18** 960, 21 **2000, 30**

^ indicates a false reading due to the model

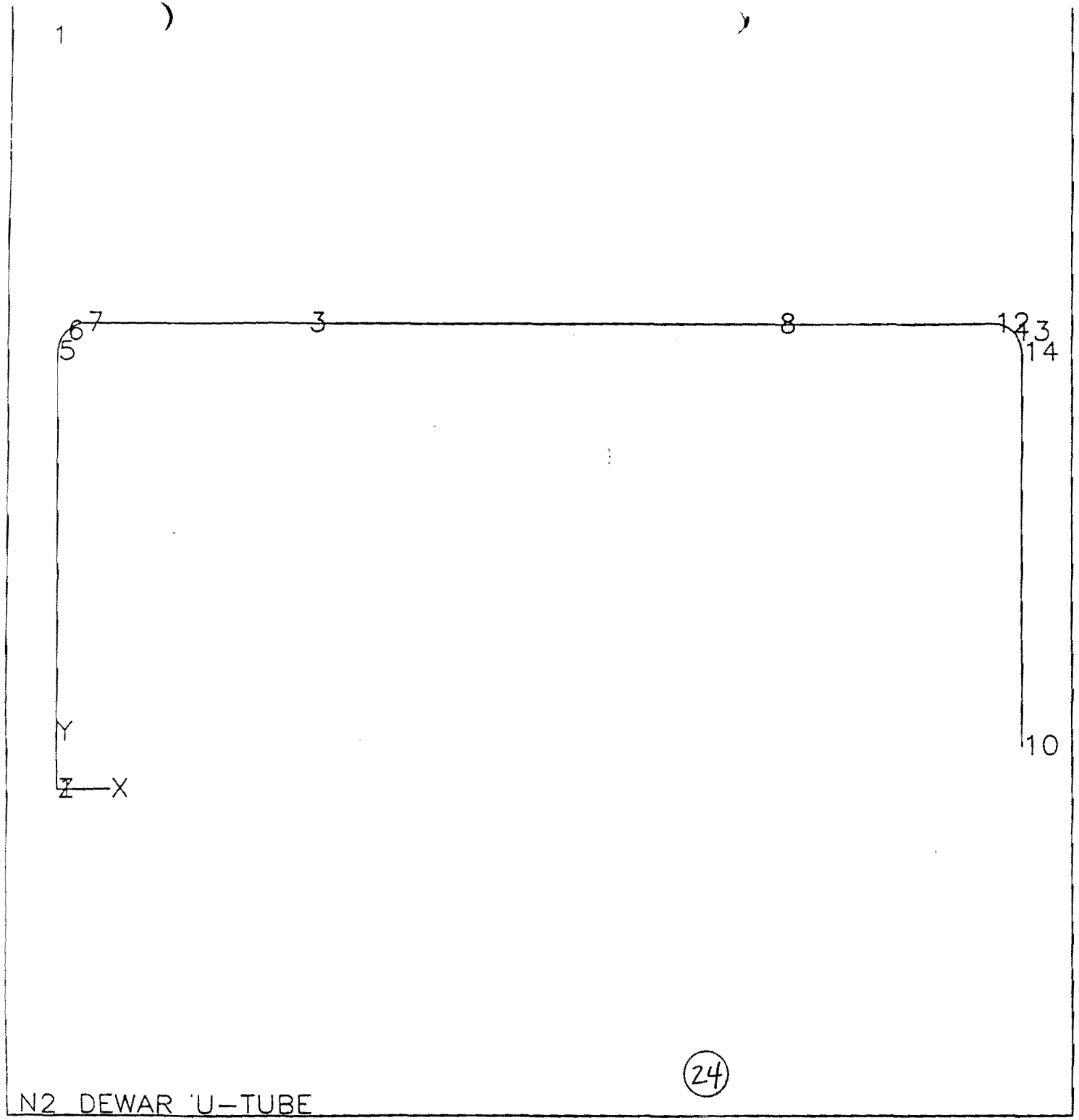

ANSYS 4.3A
APR 17 1989
9 05 43
PLOT NO. 1
PREP7 ELEMENTS

ZV =1
DIST=43.89
XF =39.9
YF =18.25

1

ANSYS 4.3A
APR 17 1989
9 06 03
PLOT NO. 2
PREP7 ELEMENTS

ZV =1
DIST=43.89
XF =39.9
YF =18.25

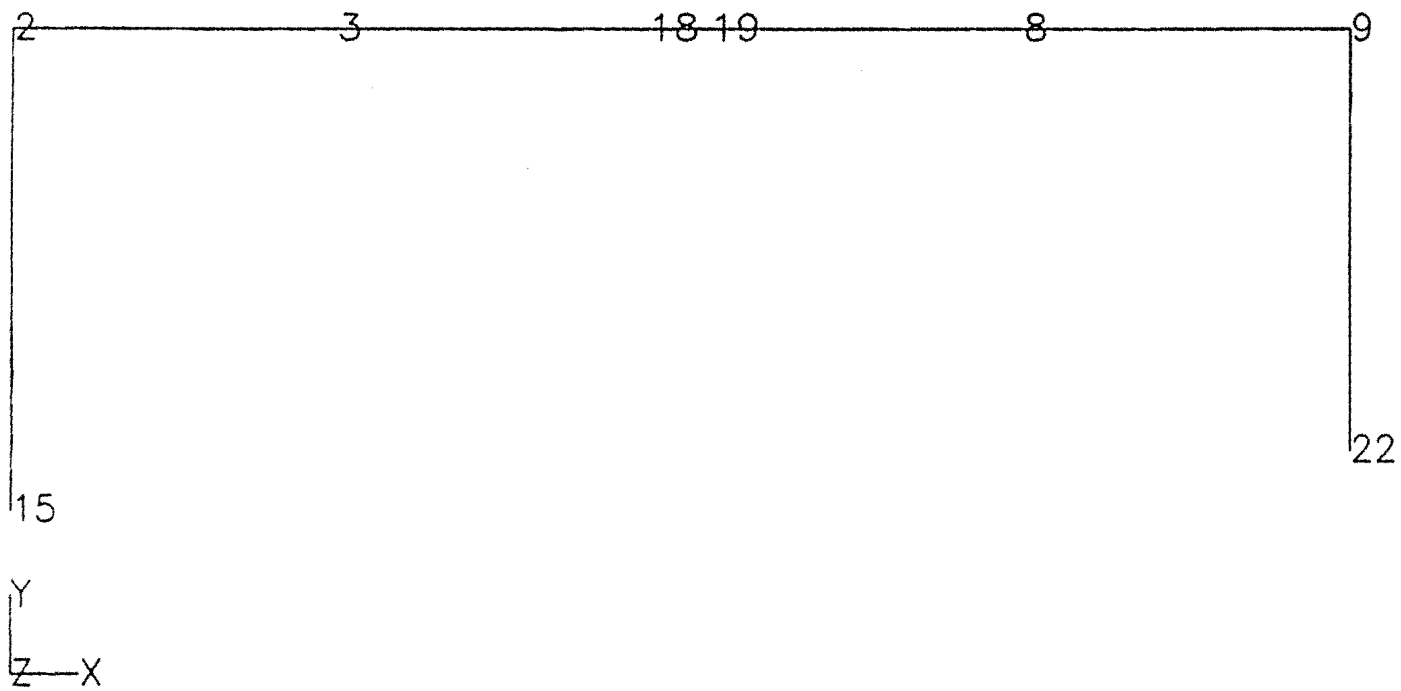

N2 DEWAR U-TUBE

25

PIPE 2

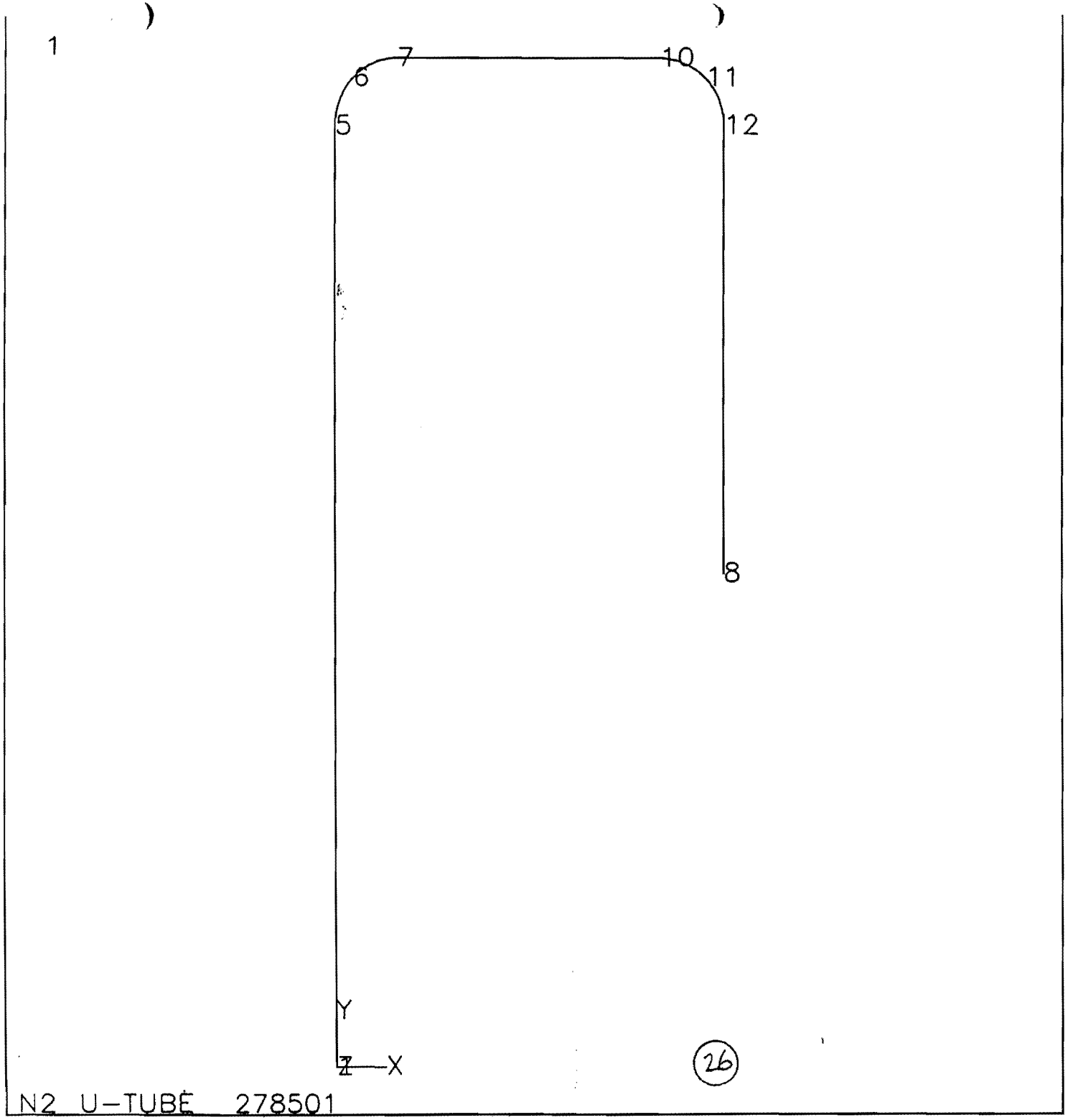

ANSYS 4.3A
APR 17 1989
8 59 48
PLOT NO. 2
PREP7 ELEMENTS

ZV =1
DIST=18.205
XF =6.9
YF =16.55

PIPE 2

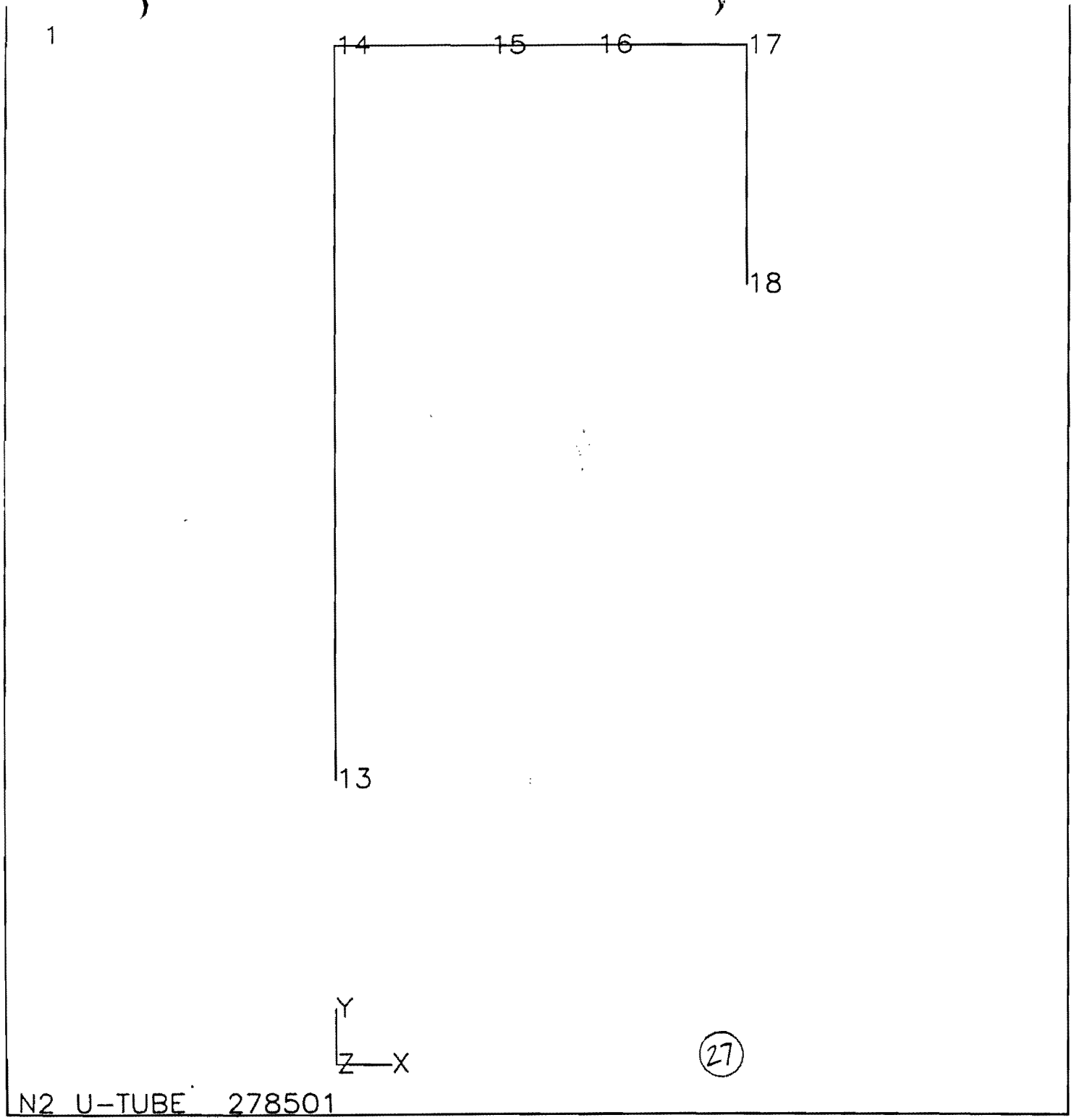

ANSYS 4.3A
APR 17 1989
8 59 54
PLOT NO. 3
PREP7 ELEMENTS

ZV =1
DIST=18.205
XF =6.9
YF =16.55

Pipe 3

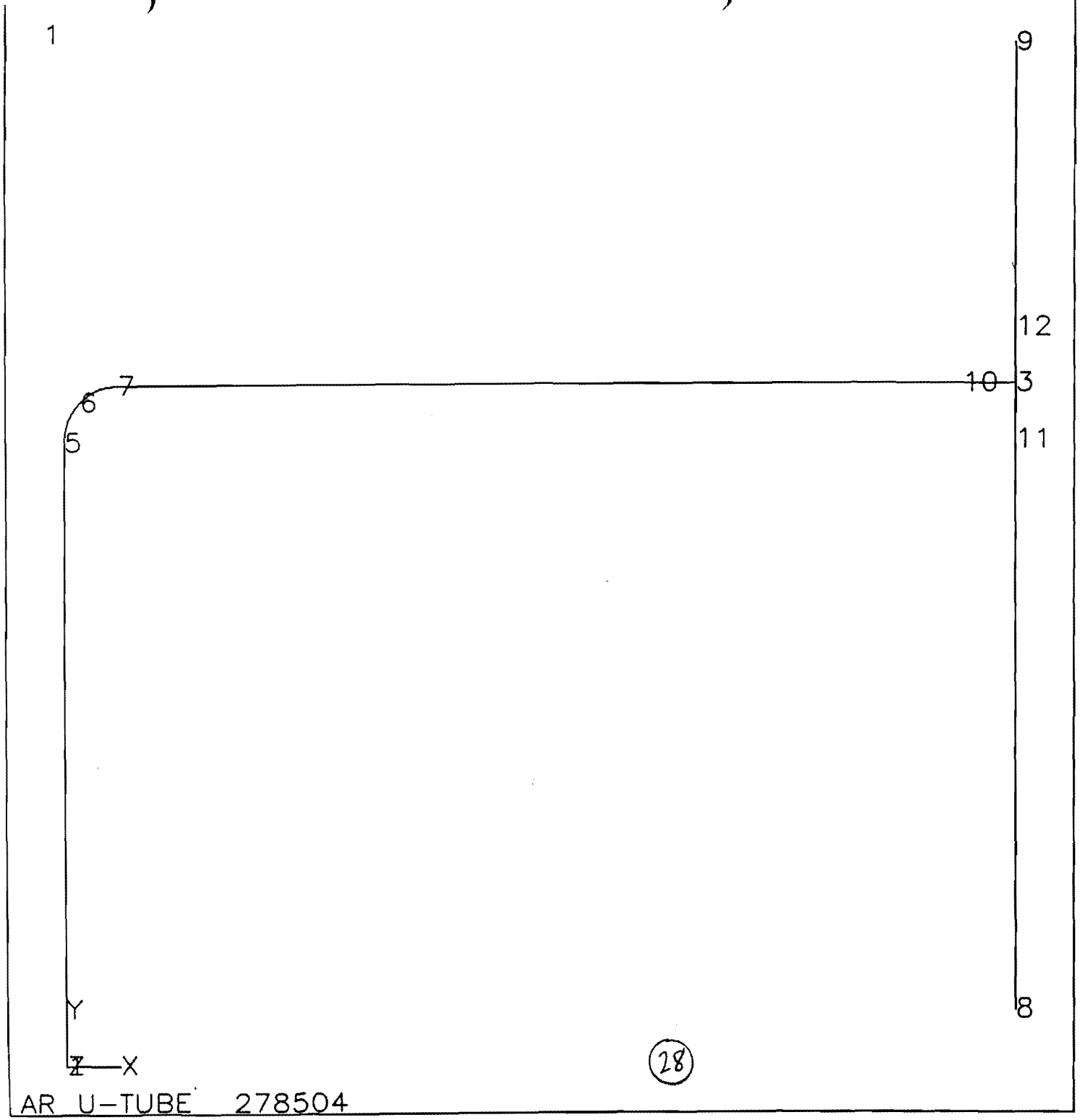

ANSYS 4.3A
APR 17 1989
9 22 22
PLOT NO. 1
PREP7 ELEMENTS

ZV =1
DIST=22.451
XF =20
YF =20.41

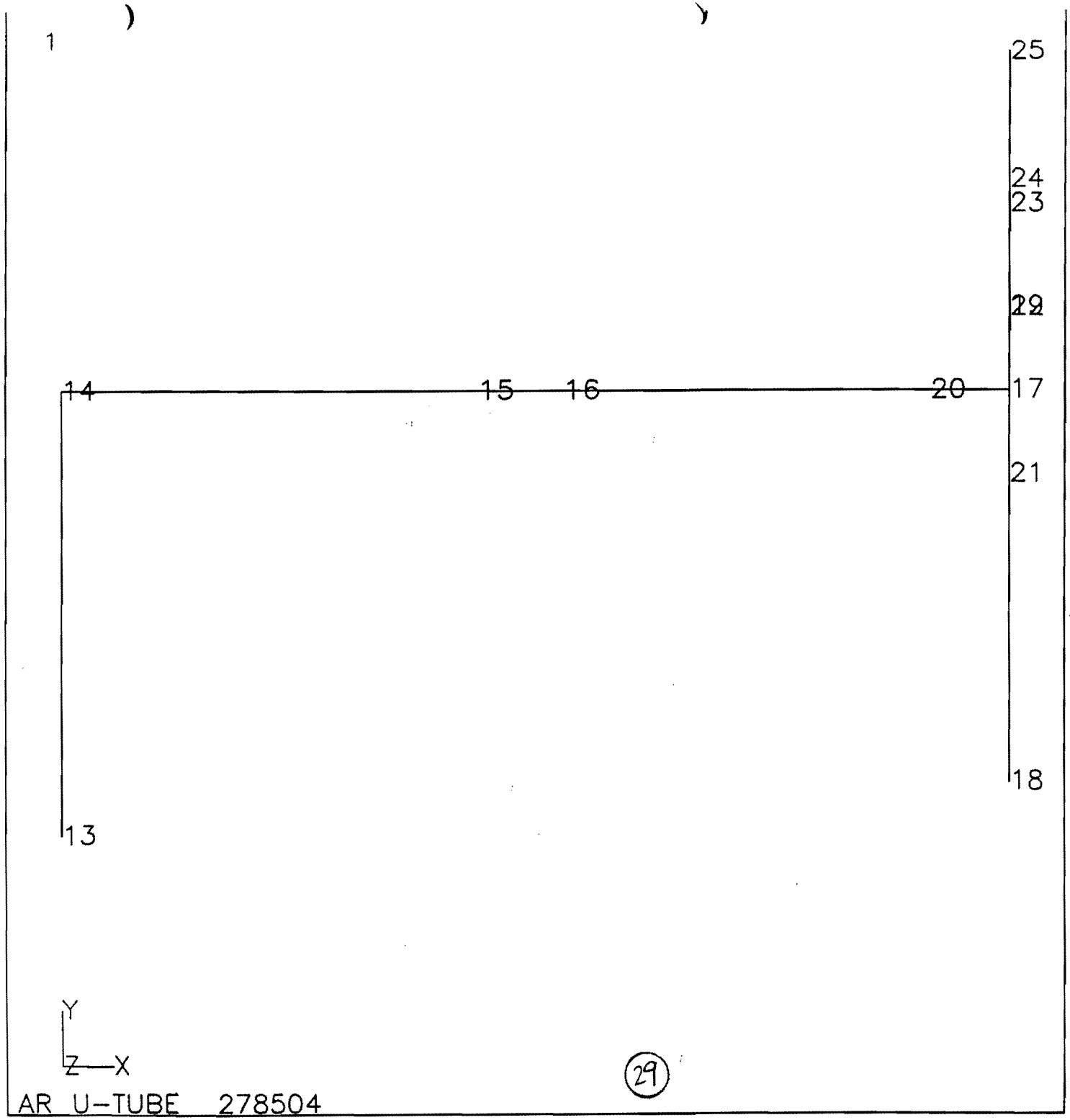

ANSYS 4.3A
APR 17 1989
9 22 24
PLOT NO. 2
PREP7 ELEMENTS

ZV =1
DIST=22.451
XF =20
YF =20.41

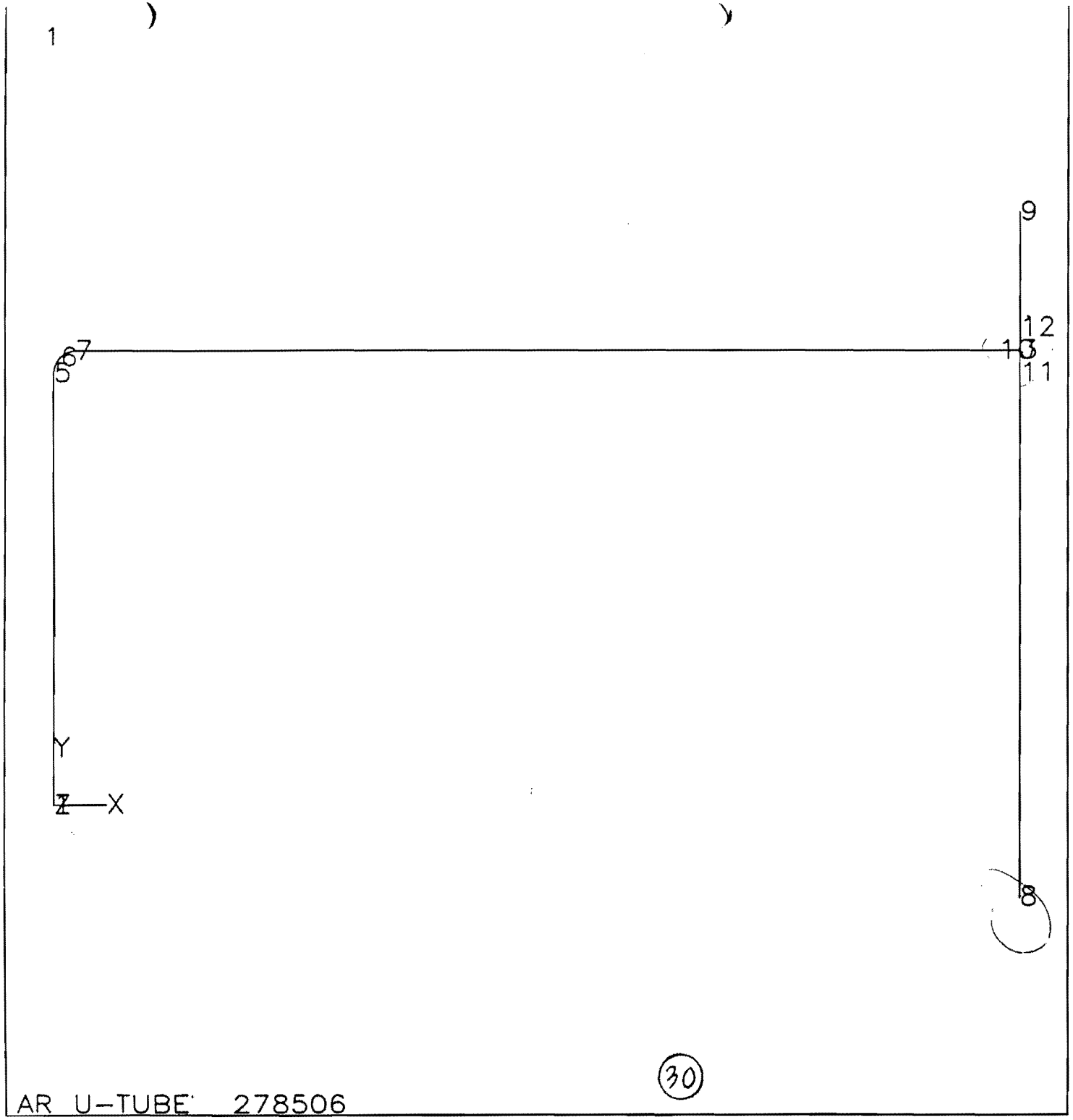

ANSYS 4.3A
APR 17 1989
9 47 51
PLOT NO. 1
PREP7 ELEMENTS

ZV =1
DIST=55.33
XF =50.3
YF =24.66

PIPE 4

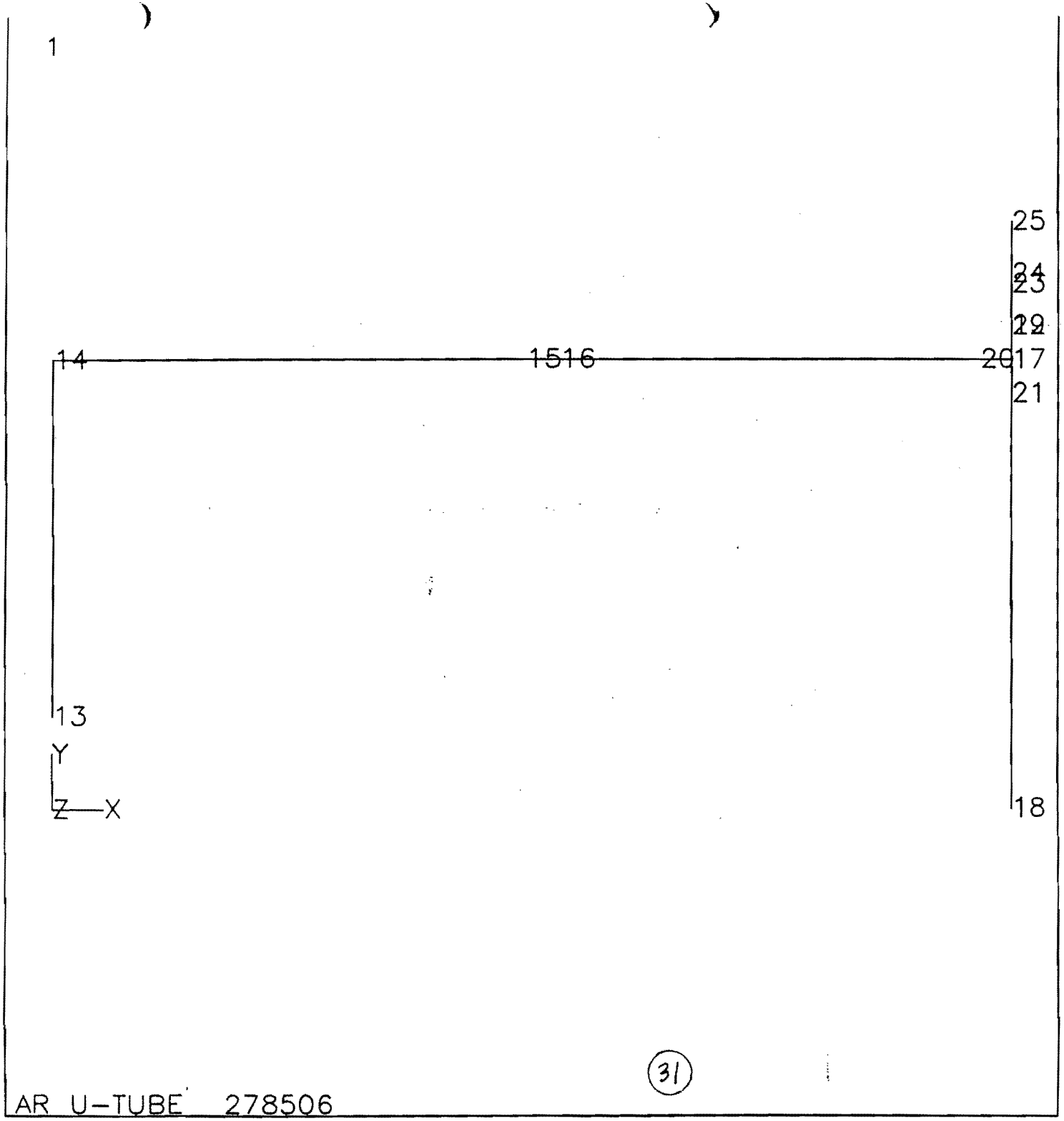

ANSYS 4.3A
APR 17 1989
9 26 51
PLOT NO. 1
PREP7 ELEMENTS

ZV =1
DIST=55.33
XF =50.3
YF =24.66

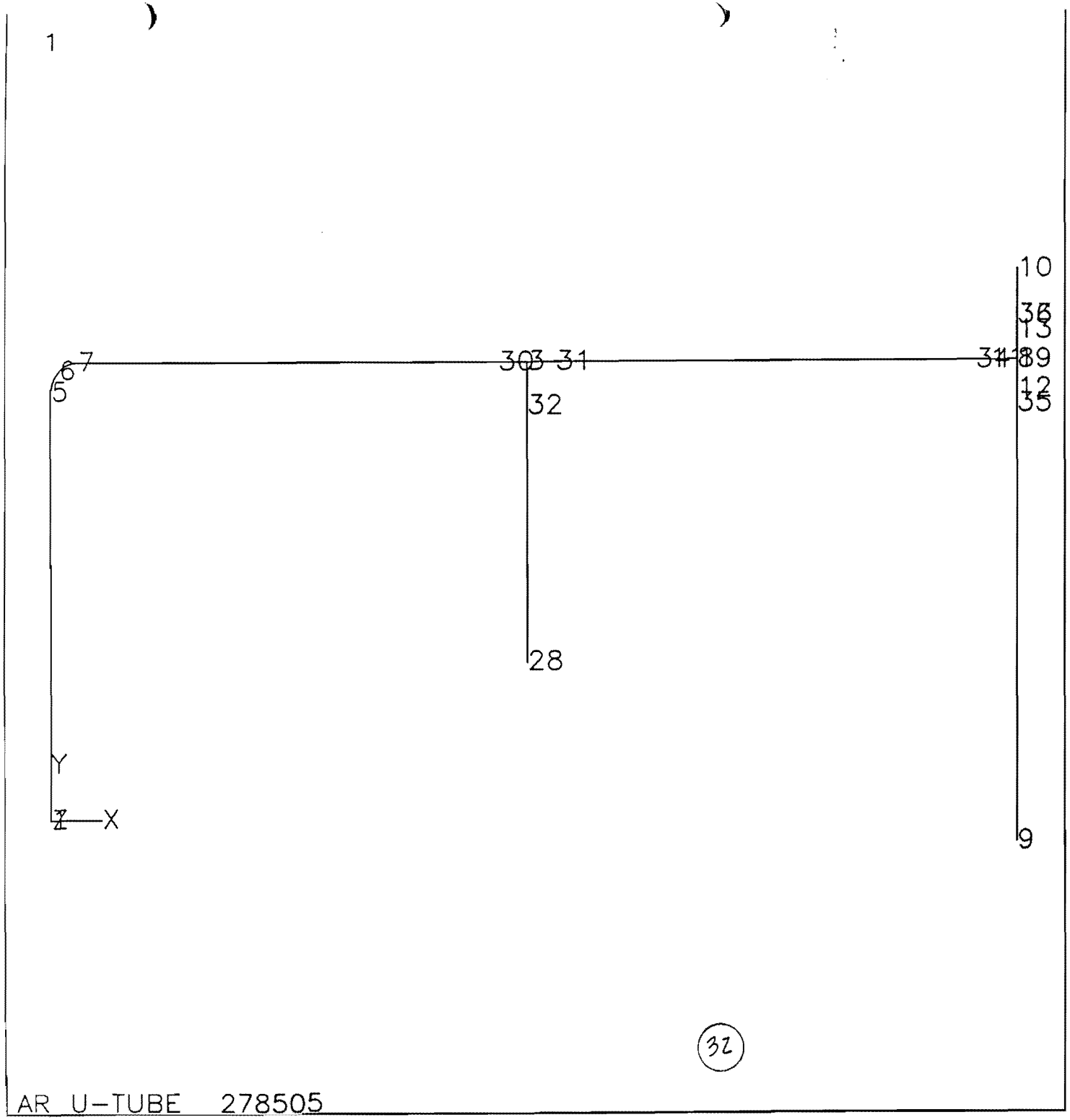

ANSYS 4.3A
JUL 7 1989
8 23 29
PLOT NO. 1
PREP7 ELEMENTS

ZV =1
DIST=42.46
XF =38.6
YF =20

AR U-TUBE 278505

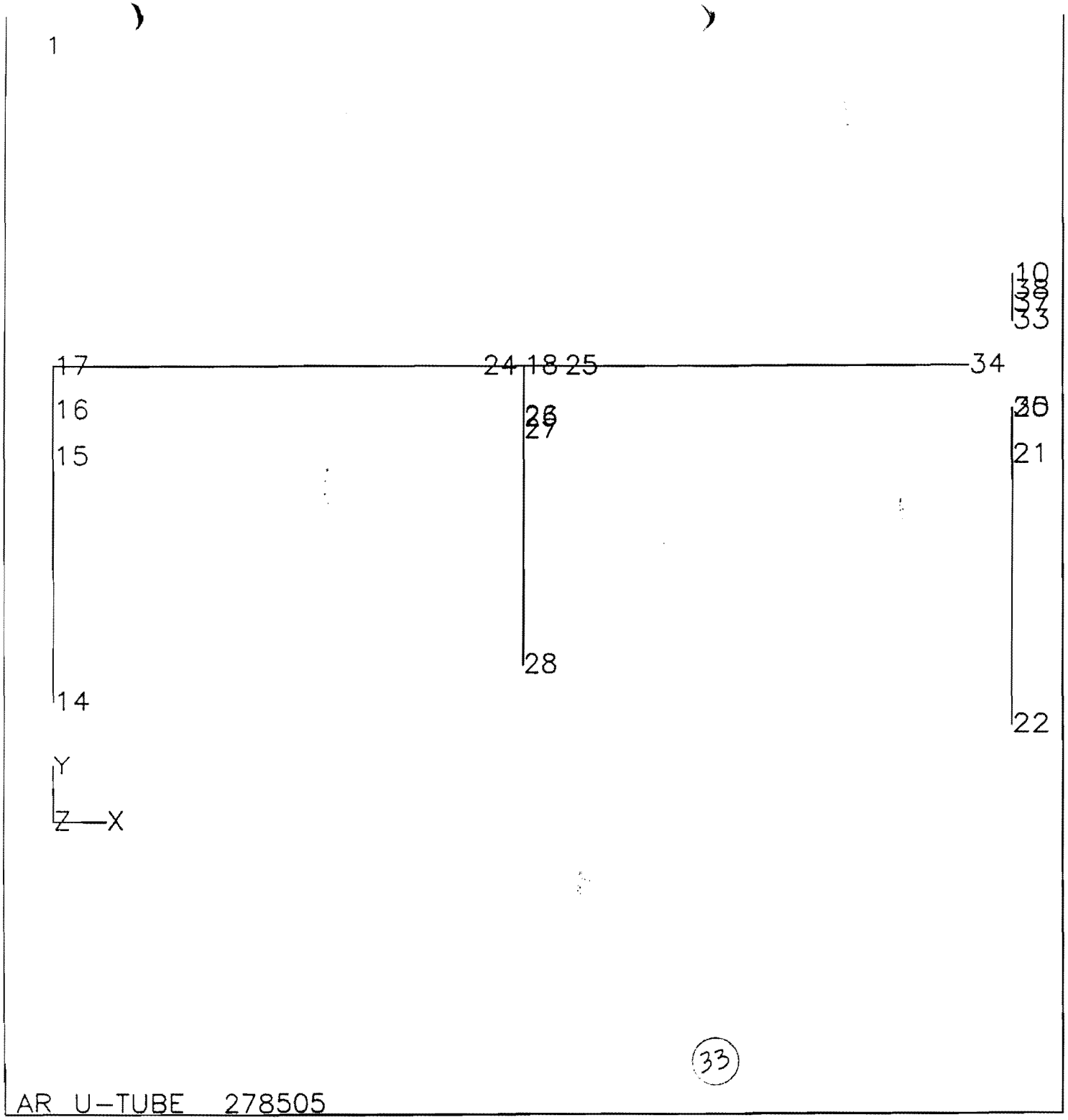

ANSYS 4.3A
JUL 7 1989
8 23 49
PLOT NO. 2
PREP7 ELEMENTS

ZV =1
DIST=42.46
XF =38.6
YF =20

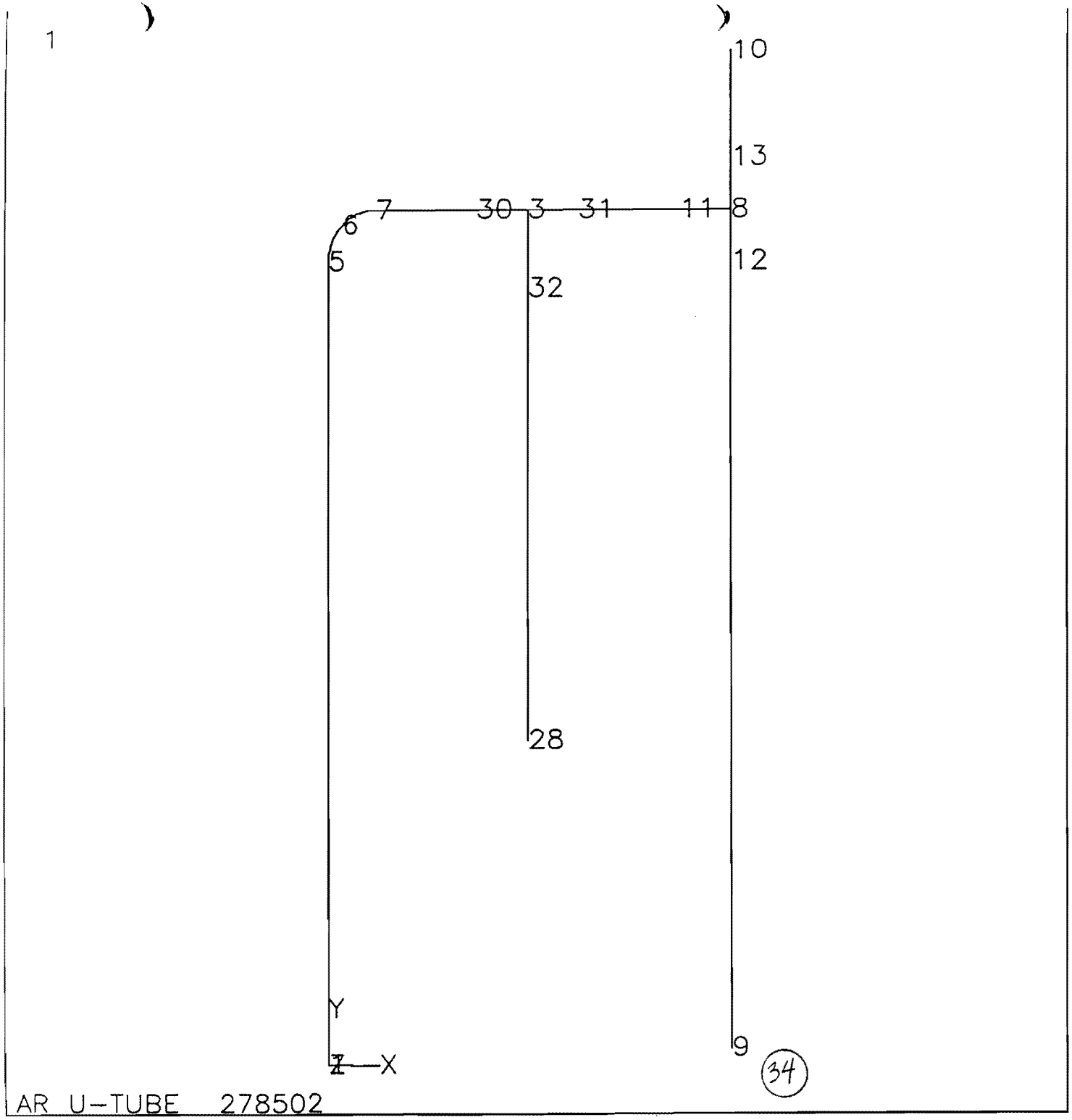

ANSYS 4.3A
JUL 7 1989
8 25 03
PLOT NO. 1
PREP7 ELEMENTS

ZV =1
DIST=24.09
XF =8.94
YF =21.9

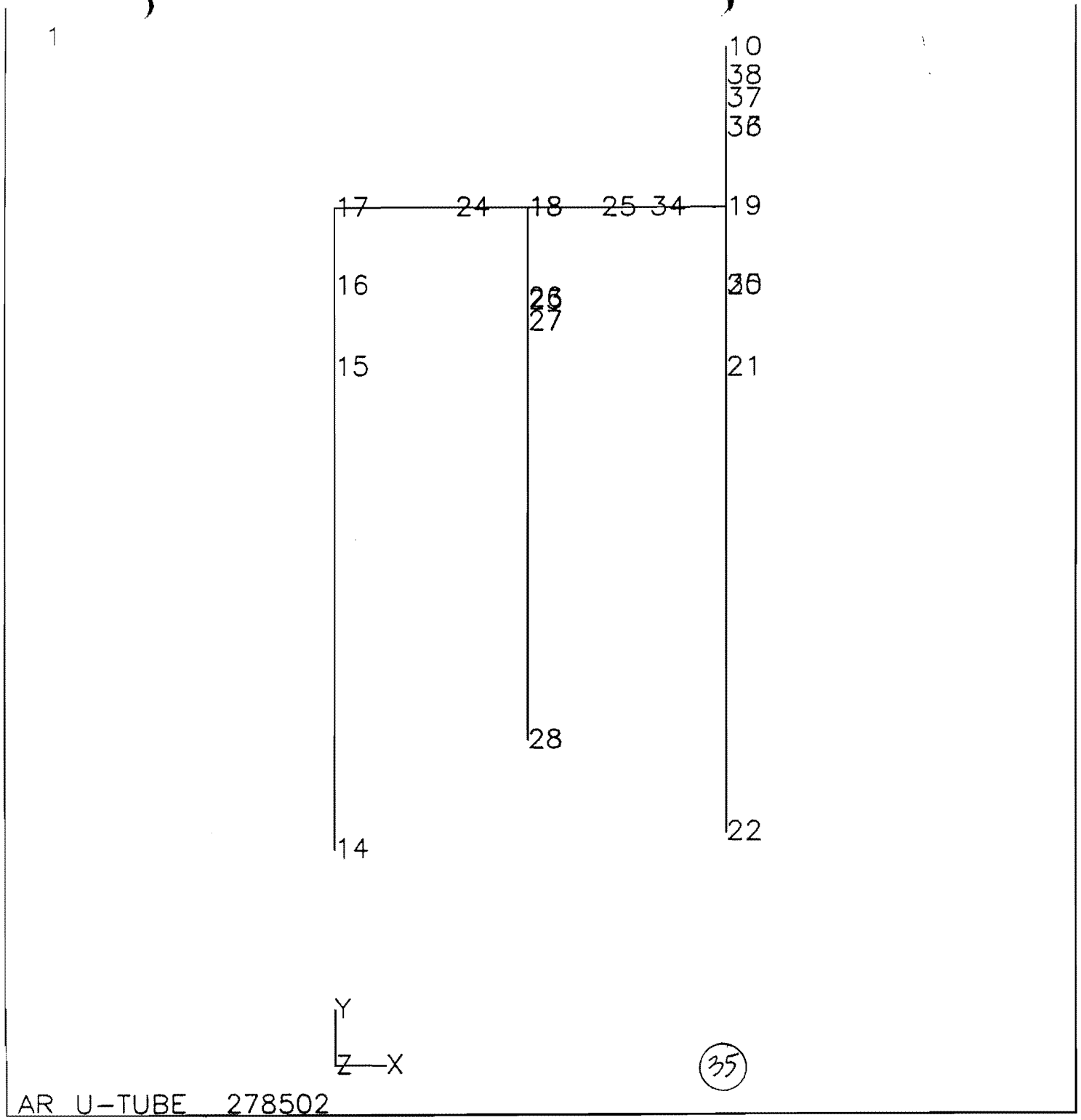

ANSYS 4.3A
JUL 7 1989
8 25 27
PLOT NO. 2
PREP7 ELEMENTS

ZV =1
DIST=24.09
XF =8.94
YF =21.9

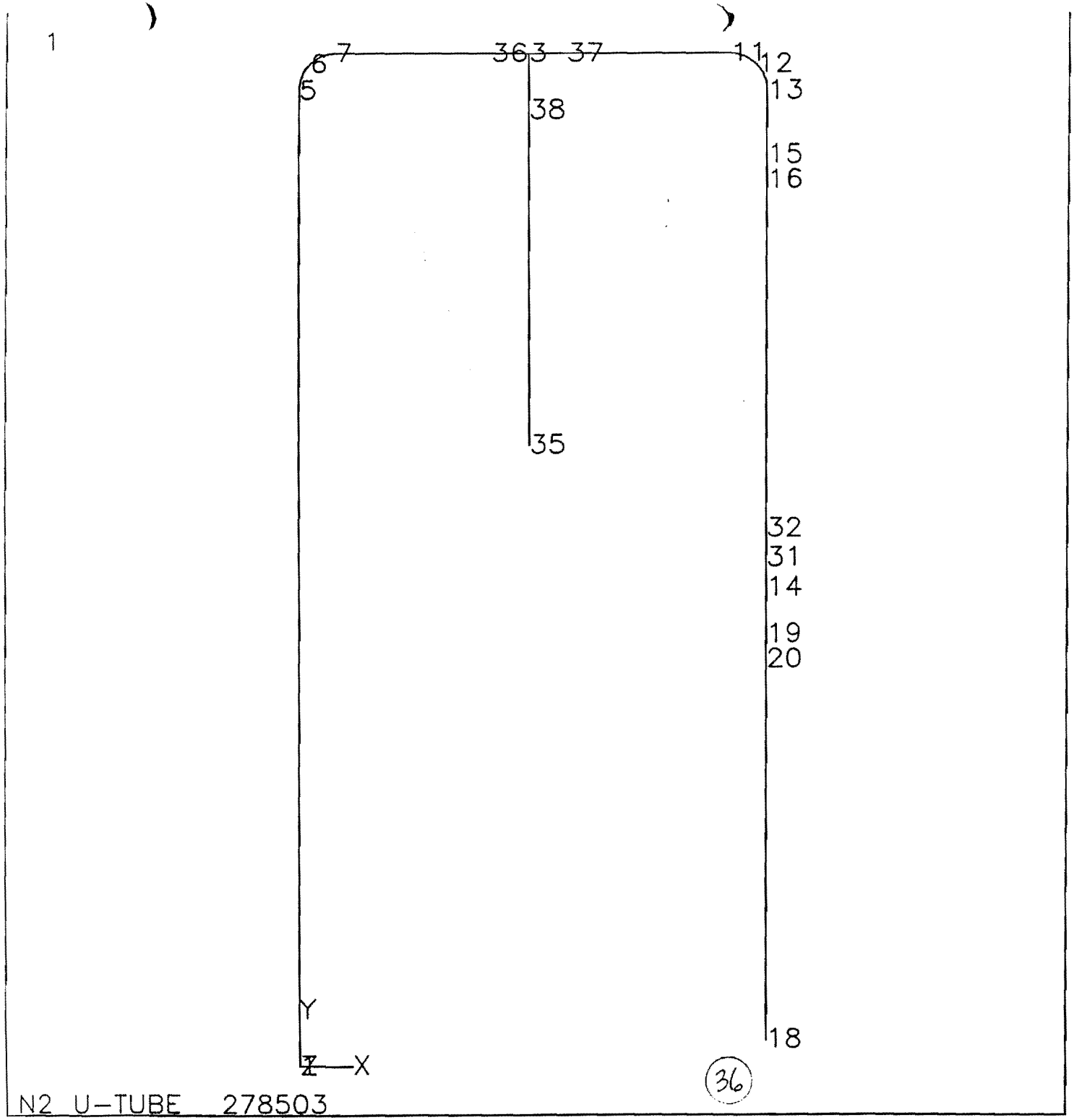

36

ANSYS 4.3A
JUL 7 1989
8 27 10
PLOT NO. 1
PREP7 ELEMENTS

ZV =1
DIST=32.615
XF =14
YF =29.65
ZF =1.733

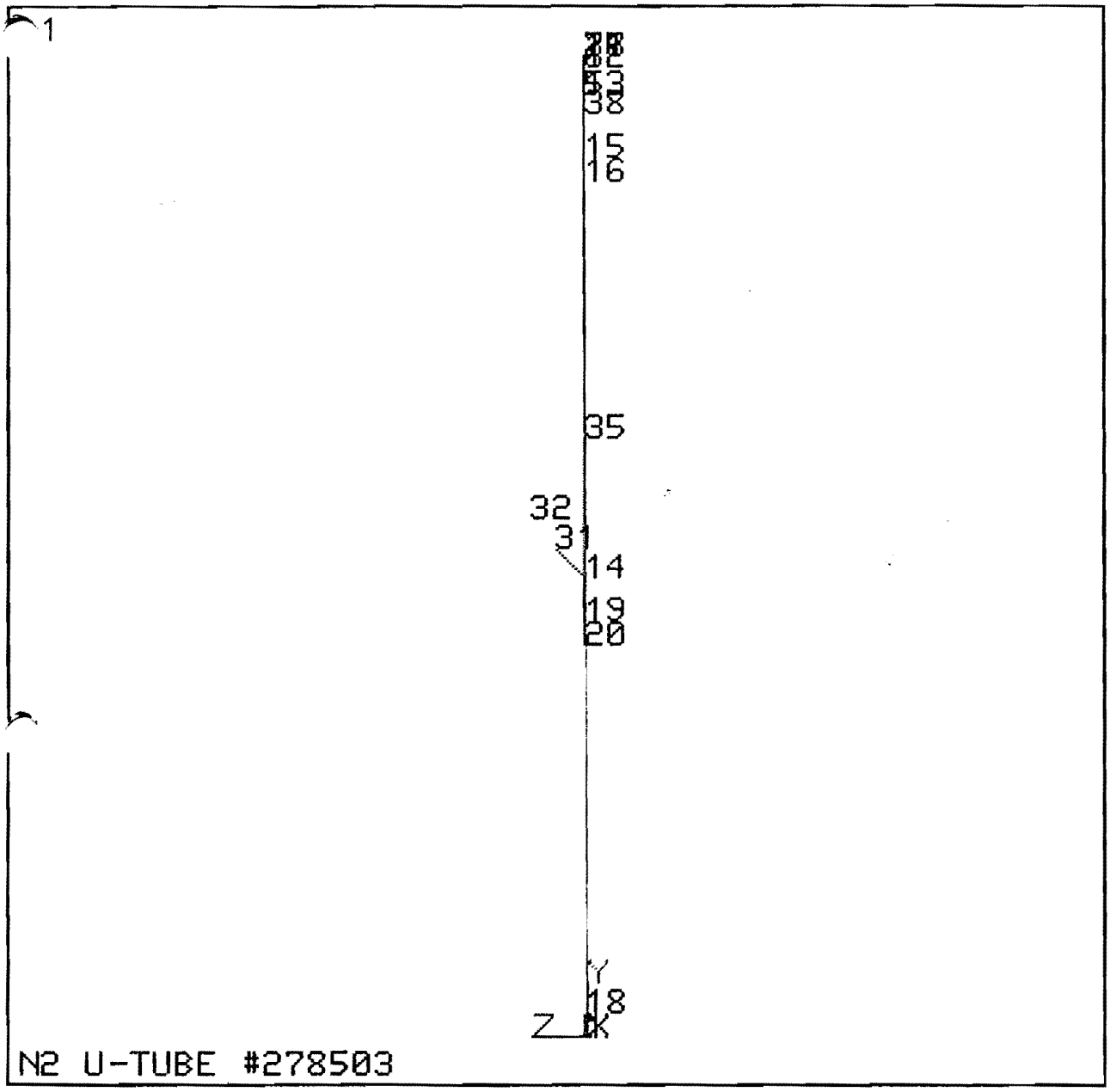

ANSYS 4.
JUN 15 198
13:21:49
PREP7 ELEM

XV =1
DIST=32.61
XF =14
YF =29.65
ZF =1.733

```
eplo

PRODUCE ELEMENT PLOT IN DSYS =    0
PREP7 -INP=
```

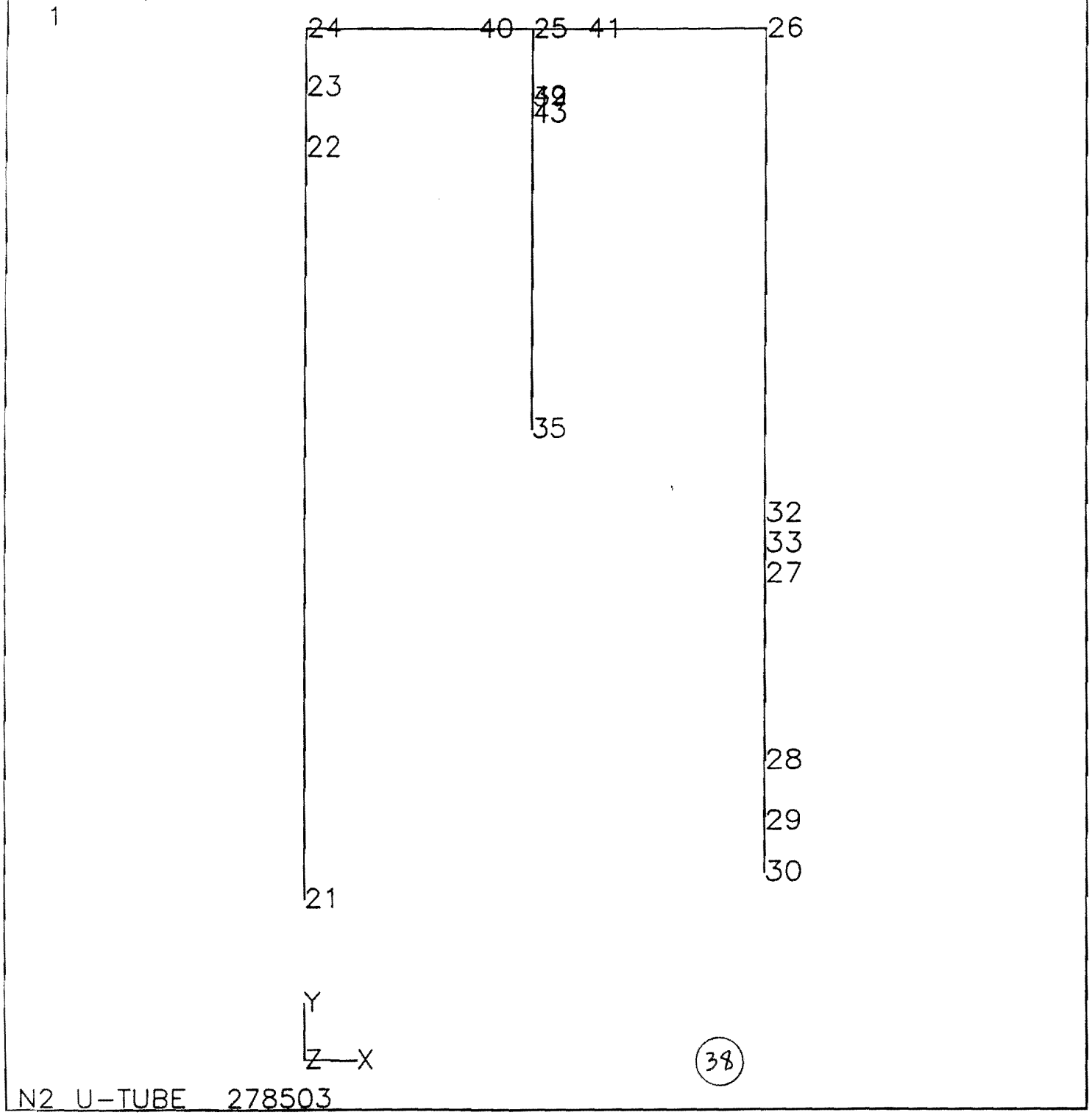

ANSYS 4.3A
JUL 7 1989
8 27 41
PLOT NO. 2
PREP7 ELEMENTS

ZV =1
DIST=32.615
XF =14
YF =29.65
ZF =1.733

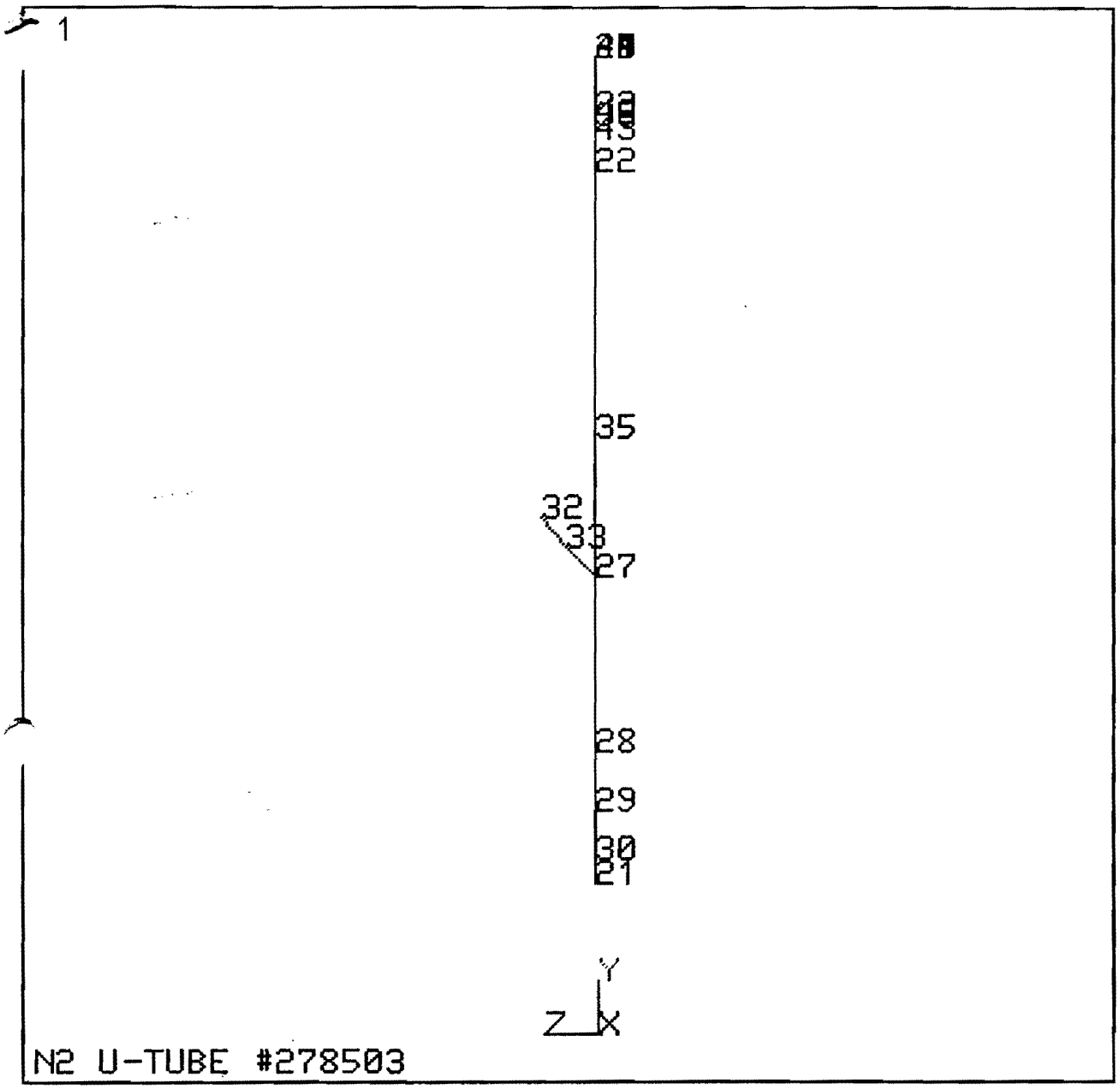

ANSYS 4.
JUN 15 198
13:25:53
PREP7 ELEM

XV =1
DIST=32.61
XF =14
YF =29.65
ZF =1.733

PRODUCE ELEMENT PLOT IN DSYS = 0
PREP7 -INP=

*

A&N CORPORATION
P. O. BOX 878 ROUTE 40 WEST INGLIS, FLORIDA 32649
TELEPHONE (904) 447-2901

VACUUM COUPLINGS

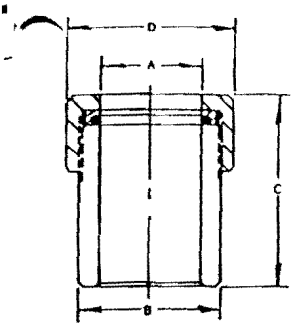

- **BRASS**
- **304 STAINLESS**
- **BRASS/STAINLESS**

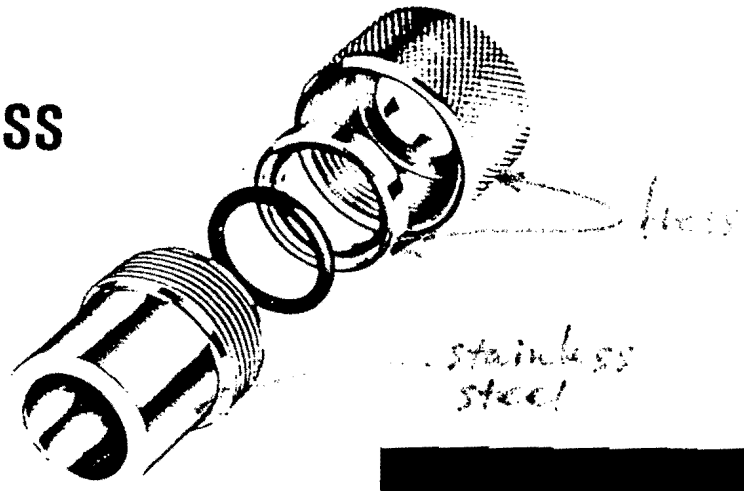

STYLE K

Part No.	Tube OD	A	B	C	D	O Ring Part No.
06-K	1/16	.072	3/8	1 3/16	1/2	2-3
12-K	1/8	.136	3/8	1 3/16	1/2	2-6
18-K	3/16	.199	3/8	1 3/16	5/8	2-8
25-K	1/4	.265	1/2	1 3/16	5/8	2-10
31-K	5/16	.328	1/2	1 3/16	7/8	2-11
38-K	3/8	.390	5/8	1 3/16	7/8	2-12
50-K	1/2	.515	3/4	1 3/16	7/8	2-14
62-K	5/8	.640	7/8	1 1/2	1 3/16	2-114
75-K	3/4	.765	1 1/8	1 3/8	1 3/8	2-116
87-K	7/8	.890	1 1/4	1 5/8	1 3/4	2-118
100-K	1	1.015	1 3/8	1 7/8	1 5/8	2-120
112-K	1 1/8	1.140	1 1/2	1 7/8	1 7/8	2-216
125-K	1 1/4	1.265	1 11/16	2	1 7/8	2-218
138-K	1 3/8	1.3.90	1 13/16	2 1/8	2	2-220
150-K	1 1/2	1.515	2	2 1/4	2 1/4	2-222
162-K	1 5/8	1.640	2 1/8	2 1/4	2 3/8	2-223
200-K	2	2.015	2 1/2	2 1/4	2 3/4	2-226

"O" Ring Groove Machined Into Retainer Ring
I.D. Dimension Allows for Tube Variations

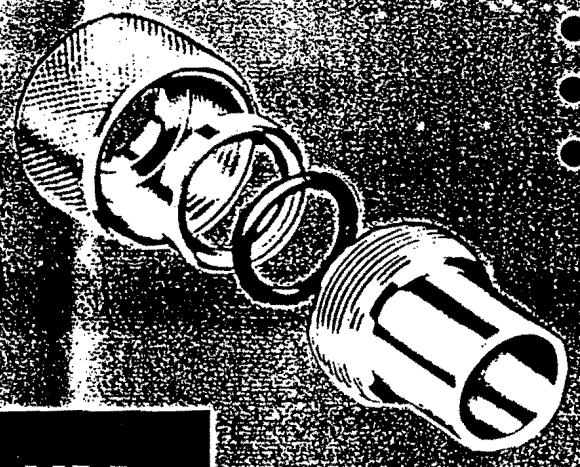

- **BRASS**
- **304 STAINLESS**
- **BRASS/STAINLESS**

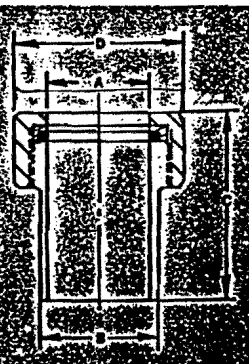

STYLE KM

Part No.	Tube OD	A	B	C	D	O Ring Part No.
06-KM	1/16	.072	3/8	1 3/16	1/2	2-3
12-KM	1/8	.136	3/8	1 3/16	1/2	2-6
18-KM	3/16	.199	3/8	1 3/16	5/8	2-8
25-KM	1/4	.265	3/8	1 3/16	5/8	2-10
31-KM	5/16	.328	1/2	1 3/16	7/8	2-11
38-KM	3/8	.390	1/2	1 3/16	7/8	2-12
50-KM	1/2	.515	5/8	1 3/8	7/8	2-14
62-KM	5/8	.640	3/4	1 1/2	1 3/16	2-114
75-KM	3/4	.765	7/8	1 3/8	1 3/8	2-116
87-KM	7/8	.890	1	1 5/8	1 3/8	2-118
100-KM	1	1.015	1 1/8	1 7/8	1 3/8	2-120
112-KM	1 1/8	1.140	1 1/4	1 7/8	1 7/8	2-216
125-KM	1 1/4	1.265	1 1/2	2	1 7/8	2-218
138-KM	1 3/8	1.390	1 5/8	2 1/8	2	2-220
150-KM	1 1/2	1.515	1 3/4	2 1/4	2 1/4	2-222
162-KM	1 5/8	1.640	1 7/8	2 1/4	2 3/8	2-223
200-KM	2	2.015	2 1/4	2 1/4	2 3/4	2-226

Sizes Nest to Next Size.
"O" Ring Groove Machined Into Retainer Ring

Effective 2-15-83

SINGLE CASE COMPARISON OF VARIOUS ANALYTIC APPROACHES

CASE: XZ MOMENT AT LEFT BAYONET CONNECTION, NODE 1, PIPE #2
(condenser outlet jumper)

APPROACH	M_{XZ} (in-lbs)
Roarke and Young (case 5q)	1020
Hand calculations (rigid corners)	5200
Hand calcs. + Roarke and Young (case 5c)	1850
Grinnel	1980
ANSYS®	970

KD

17 Apr 89

Stresses @ Bayonet End Weldment

$$I_u = \frac{\pi r^3}{2} \qquad I = 0.707\,h\,\frac{\pi r^3}{2}$$

$$\sigma_b = \frac{Mc}{I}$$

Ref: Mechanical Engr. Design, Shigley

$$\tau_{max} = \frac{Mr}{I} + \frac{F_y}{A_s}$$

$$A_s = 0.707\,h\,\pi r \times 2$$
$$= 1.414\,\pi r h$$

$$\tau_{max} = \frac{Mr}{0.707\,h\,\frac{\pi r^3}{2}} + \frac{F_y}{1.414\,\pi r h}$$

$$\tau_{max} = \frac{1}{\pi h}\left[\frac{2.83M}{r^2} + \frac{F_y}{1.414r}\right]$$

let $r = \frac{1.900}{2} = 0.95\text{ in}$, $h = t_p = 0.109\text{ in}$ $\Rightarrow 1\tfrac{1}{2}''$ sch 10

$$\boxed{\tau_{max} = 9.16M + 2.17F_y}$$

M = moment about xz plane (in.lbs)
F_y = axial load (lbs)

let $\tau_{all} = 0.4\, S_y \Big|_{\substack{parent \\ metal}}$

Ref: Manual of Steel Constr., 8th Ed., American Inst. of Steel

$S_y \Big|_{\substack{parent \\ metal}} = S_y \Big|_{\substack{304 \\ St.St}} = 30{,}000\,psi$

if we ignore axial loading, then

$$\tau_{all} = 12{,}000\,psi = 9.16\,M$$

$$\boxed{M \leq 1300 \text{ in-lbs}}$$

KO

14 June 89

Max. Bending Moment for V-Band Coupling

from Aeroquip Catalogue

$$N_b = \frac{4M}{\pi D^2}, \quad N_a = \frac{A}{\pi D}, \quad N_p = \frac{PD}{4}$$

$$P_b = \frac{4N}{D}, \quad N = N_b + N_a + N_p$$

use VOSS VC 1185-090BA "V" retainer band
(corresponds to NH100-2839)

$D = 3.0$ in, $P_{max} = 100$ psi; $P_b \equiv$ max. burst $= 300$ psi
$M =$ moment, $A =$ axial force (2-4 safety factor)

$$P_b = \frac{4}{3}\left[\frac{4M}{\pi D^2} + \frac{A}{\pi D} + \frac{PD}{4}\right]$$

$$= \frac{4}{3}\left[\frac{4M}{9\pi} + \frac{A}{3\pi} + \frac{100(3)}{4}\right]$$

$$= \frac{16M}{27\pi} + \frac{4A}{9\pi} + 100$$

$$= 0.19M + 0.14A + 100$$

$$\boxed{\therefore\ 0.19M + 0.14A \geq 200}$$

KD

22 June 89

U-Tube Transfer Line Heat Leak

3/4" Y valve: ~~5.4~~ $6.6 \times \frac{220}{280}$ = 5.2 W

rigid lines: $1.63 \times 0.293 \times 0.5$ = 0.24 W/ft

bayonets (male): $23.6 \times 0.293 \times 0.5$ = 3.46 W

filters (approx): 60×0.293 = 18 W

stand off: $\frac{27.3 \times 1.6}{14 \times 2.54}$ = 1.2 W

U-tube	length, ft	heat leak, watts
lN_2 from N_2 dewar (2)	11.1	9.6
gN_2 from condenser	3.8	7.7
lAr from tanker	6.1	9.6
lAr to tanker	15.1	11.7
gAr to/from cryostats	10.9	28.7
lAr to/from cryostats	6.0	27.6
lN_2 to condenser	10.6	32.7