Design and Test of the CC Cryostat Head Cart

Engineering Note #3740.215-EN-182

Issued: August 8, 1989

Originator: Al Jaques
Checked: _____

D-Zero Engineering Note
3740.215-EN-182
Issued 9/7/88

Design and Test of the CC Cryostat Head Cart

Al Jaques

This Engineering Note documents the design of the stand to be used to transport the CC Cryostat heads into the D-Zero clean room. Due to the width of the clean room access door, the heads will have to be upright to fit through. This head cart will hold the heads upright and wheel them into the clean room on a guided track. Before the wheels are placed on the head cart, it will be used as a stand to place the heads on for the purpose of test fitting the super insulation. The head cart will not only be structurally sufficient to support the weight of the heads but also stiff enough to allow a maximum deflection of 1/2" at the end of the 48" cylinder (see sketch in Appendix A).

The heaviest head assembly weighs about 9000 lbs. Following A.I.S.C. specifications and using a 9000 lb. design load, the head cart was initially designed and built and later modified in order to meet the deflection requirements. Bending and tension stresses were limited to two thirds the yield strength. Weld and shear stresses are limited to 0.4*Fy. The C7X12.25 channels, the L2.5X2.5X0.25 angles and the 1/2" plate are all A36 steel.

In order to validate the need for an end plate in the 48" cylinder, an ANSYS model was created of the cylinder itself to determine it's rigidity under a point load applied at it's outer end. Appendix D contains the results which demonstrate the rigidity of the cylinder-end plate assembly. Also included is a Frame-Mac simulation of the head cart which was used to estimate the deflection at the cylinder end.

A load test was performed to 133% of the rated capacity, or 12,000 lbs. The test load was incrementally applied using a crane and hook scale. A graph of deflection vs. load is shown in Appendix E. A spreader beam was designed and built to properly test the head cart. Stress calculations for this test spreader beam are included in Appendix C.

*****

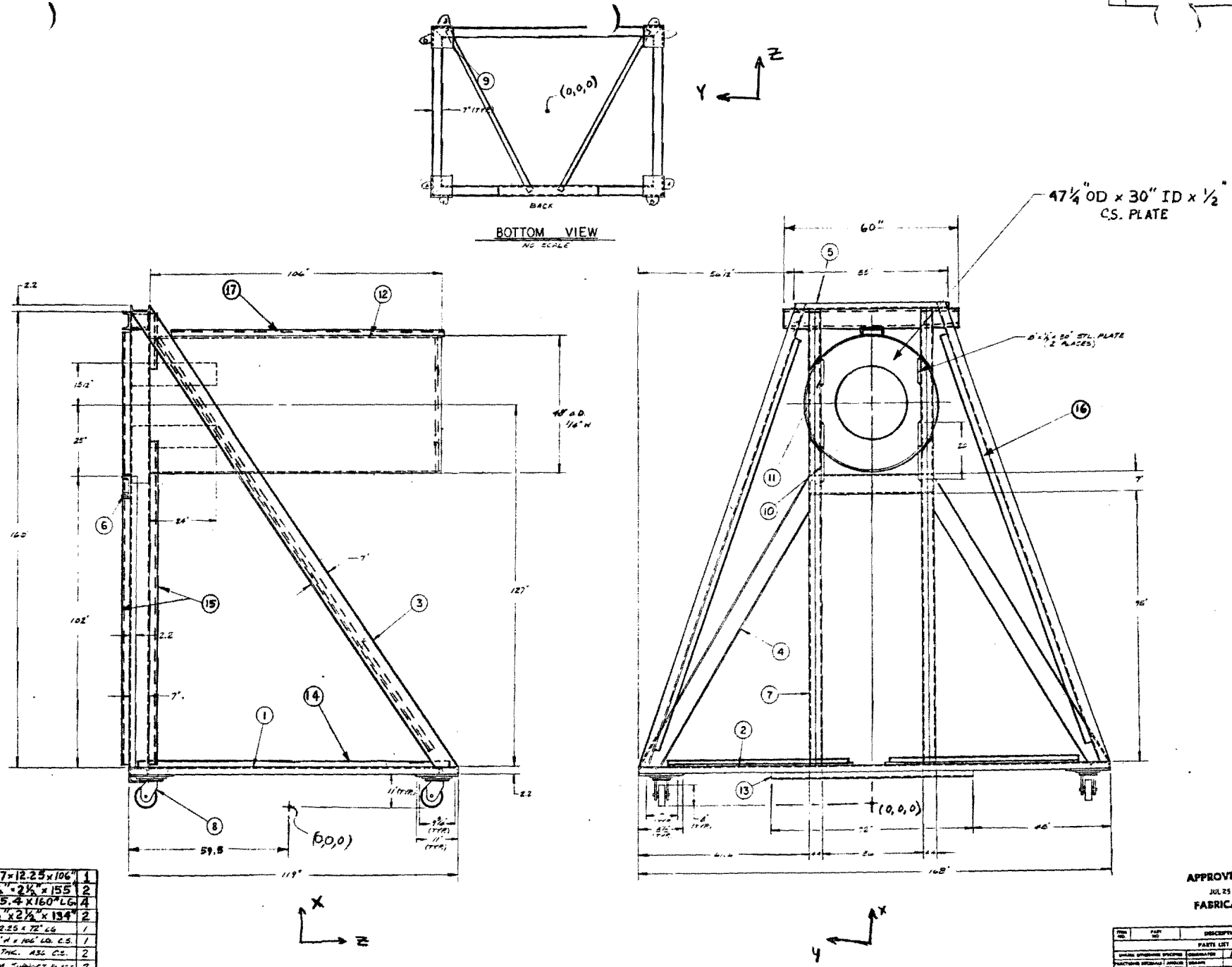

17	"C" CHANNEL C7×12.25×106"	1
16	"L" ANGLES 2½"×2½"×155"	2
15	"C" CHANNEL C4×5.4×160" LG.	4
14	"L" ANGLES 2½"×2½"×134"	2
13	'C' CHANNEL C7×12.25×72" LG.	1
12	PIPE - 48" O.D.×1/4" W×106" LG. C.S.	1
11	PLATE - 8"×80"×½" THK. A36 C.S.	2
10	MA-273201 - BOTTOM SUPPORT PLATE	2
9	PLATE - 15"×15"×½" THK. A36 C.S.	4
8	- WHEEL/CASTER ASSEMBLY	4
7	'C' CHANNEL C7×12.25×161" LG.	4
6	" " ×46" LG.	1
5	" " ×56" LG.	2
4	" " ×120" LG.	2
3	" " ×205" LG.	2
2	" " ×169" LG.	2
1	" " ×125" LG.	2

*-TYP WELD AT ALL JOINT LOCATIONS.

APPROVED FOR
JUL 25 1988
FABRICATION

DESCRIPTION OR SIZE		
PARTS LIST		
DESIGNATED	A. JAQUES	7
DRAWN	KAS	7
CHECKED		7
APPROVED		
USED ON		
MATERIAL	NOTED	

FERMI NATIONAL ACCELERATOR LABORATORY
UNITED STATES DEPARTMENT OF ENERGY

DØ DETECTOR CC CRYOSTAT
HEAD CART
ASSEMBLY

SCALE 1"=1'-0" | DRAWING NUMBER 3740.514ME273200

SIZE MEMBERS OF HEAD CART

UPRIGHTS

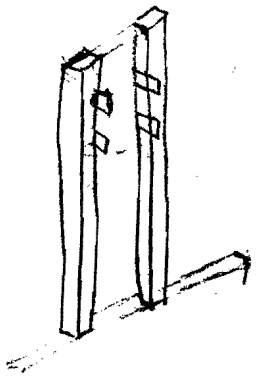

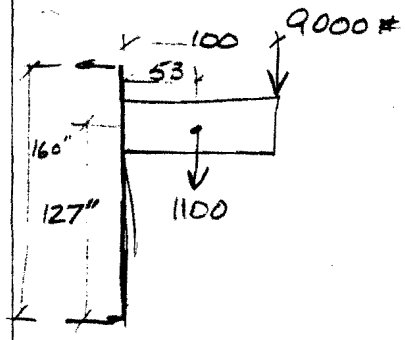

IN EACH BEAM

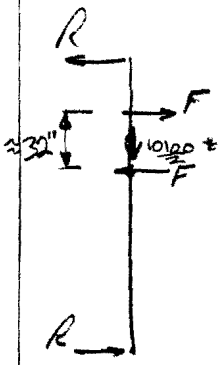

$$M = \frac{9000(100) + 1100(53)}{2}$$

$$= 480 \text{ in-k}$$

$$F = \frac{480 \text{ in-k}}{32} = 15.0^k$$

$$R = \frac{480}{160} = 3^k$$

$$M_{MAX} = 3^k(127-16)$$

$$= 333 \text{ in-k}$$

use 335 in-k

START w/ 2 C7x12.25 CHANNELS

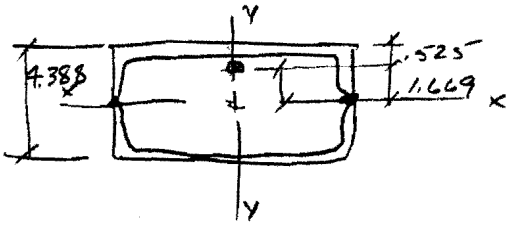

$$A = 2 \times 3.60 = 7.2 \text{ in}^2$$

$$I_{xx} = 2[1.17 + 3.6(1.669)^2]$$

$$= 22.4 \text{ in}^4$$

$$S_{xx} = \frac{22.4}{2.194} = 10.2 \text{ in}^3$$

$$I_{yy} = 2(24.2) = 48.4 \text{ in}^4$$

$$S_{yy} = \frac{48.4}{3\frac{1}{2}} = 13.83 \text{ in}^3$$

$$f_a = \frac{10100/2}{7.2} = 0.7 \text{ ksi}$$

$$\frac{f_a}{F_y} = \frac{0.7}{36} = 0.02$$

$$f_{b_{xx}} = \frac{335}{10.2} = 32.8 \text{ ksi} = 0.91 F_y \quad \text{To-High}$$

$$f_{b_{yy}} = \frac{335}{13.83} = 24.2 = 0.67 F_y$$

See if 1.5.1.4.1 applies

(1) OK

(2) N/A

(3) $\frac{1}{r_{xx}} = 22.3 < \frac{190}{\sqrt{36}} = 31.6$ OK

(4) $d/t = \frac{(4.388)}{(.366)} = 12$

$$\frac{640}{\sqrt{36}}(1 - 3.74(.09)) = 70.8 \quad \text{OK}$$

1.5.1.4.1 (cont'd)

(5) N/A

(6) $L_u = 1200\left(\frac{b}{F_y}\right) = 1200\left(\frac{4.388}{36}\right)$

$= 146''$ OK

∴ 2 C7×12.25 BEAMS

OK

NOTE: LONG SIDES OF BOX BEAMS MUST BE PARALLEL TO CYLINDER AXIS.

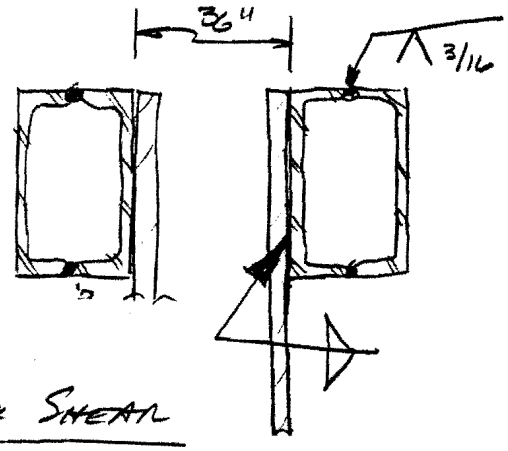

CHECK SHEAR

$V_{MAX} = 15.0$ K/BEAM

$f_v = \frac{15.0}{2(7.0)(.366)}$

$= 2.9$ KSI

$F_v = 0.4(36) = 14.4$ OK

AXIAL COMP. + BENDING (1.6.1)

$\frac{f_a}{F_a} = \frac{0.7}{.6F_y} = \frac{.7}{.6(36)} = .03 < .15$

$\therefore \frac{f_a}{F_a} + \frac{f_b}{F_b} \leq 1.0$

$\frac{0.7}{.6(36)} + \frac{24.2}{.66(36)} \leq 1.0$

$.03 + 1.01 \not\leq 1.0$ NO GOOD

AXIAL LOAD ACTS ONLY OVER A SHORT LENGTH BECAUSE DIAGONAL BRACES PICK UP THE LOAD. THEREFORE, ADD COVER PLATES TO REDUCE f_b/F_b TO LESS THAN .97

$\frac{f_b}{F_b} < .97$

$f_b < .97(.66)(36) = 23.05$ KSI

$f_b = \frac{M}{S} < 23.05$

$S > \frac{M}{23.05} = \frac{335}{23.05} = 14.57$

$S > 14.57 \text{ in}^3$

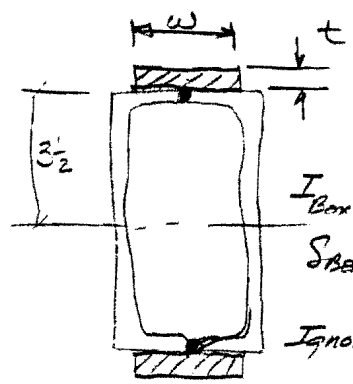

$I_{Box} = 48.4 \text{ in}^4$

$S_{Box} = 13.83$

Ignore $I_{Cover\ Pl}$

$S_{TOT} = \frac{I_{TOT}}{c} = \frac{48.4 + 2(wt)(3\frac{1}{2} + t/2)^2}{3\frac{1}{2} + t}$

Cover Pl (w×t)	S_{TOT}
$3 \times \frac{1}{4}$	$18.2\ in^3$ OK

Any Cover Pl $3 \times 1/4$ or Larger is OK.

How far down is cover pl. necessary

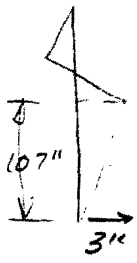

$$0.3 + \frac{f_b}{F_b} = 1.0$$

$$\frac{f_b}{F_b} = 0.97$$

$$\frac{M/S}{0.6(36)} < .97$$

$$\frac{M}{S} < 20.95$$

$$M < 20.95(13.83)$$

$$M < 289.8\ in\text{-}k$$

$$3'' \times l < 289.8$$

$$l < 96.6''$$

Cover Plate extends down to diagonal brace.

Try Cover plate only on back side.

try $3'' \times 1/4''$

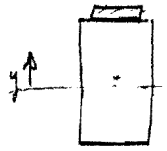

	A	y_0	Ay	Ad^2	I_0
Box	7.2			.84	48.4
Cover Pl	.75	3.625	2.719	8.08	—
	7.95		2.719	$I = 57.3$	

$\bar{y} = .342''$ $\quad S = 14.92 > 14.1$

OK

Try to Make use of 1/2" Plate which supports Cylinder

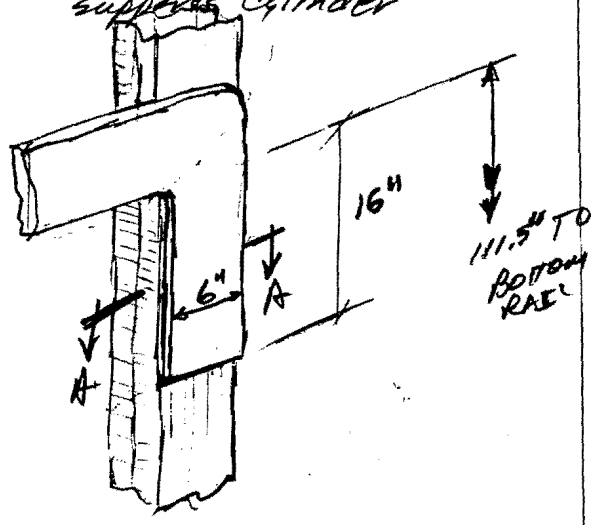

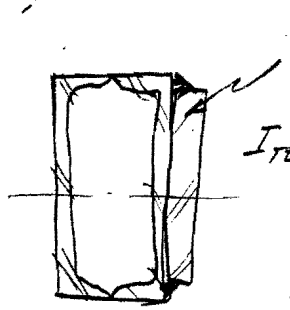

$$I_{TOT} = 48.4 + \frac{1}{12}\left(\frac{1}{2}\right)(6)^3$$

$$= 48.4 + 9.0$$

$$= 57.4\ in^4$$

$$S = \frac{57.4}{3.5} = 16.4\ in^3$$

$$f_{b_{MAX}} = \frac{335}{16.4} = 20.4 = 0.57 F_y \text{ for } F_y = 36$$

OK

Stress Max in Side Pl

$$f_b = \frac{335(3)}{57.4} = 17.5\ ksi$$

If stress is limited to $.66 F_y$

Then $F_y > \frac{17.5}{.66} = 26.5\ ksi$

Gen'l purpose C.S. plates as stocked by FWAC generally have yields of 30 ksi. Using a reduced value (90% of orig) for uncertainties gives $F_y = 27$ ksi OK.

Use Gen'l purpose plate.

Stiffened Uprights (See Frame Mac Model)

- Uprights were sufficient to safely support load but allowed excessive deflection for our needs, thus stiffening was required.

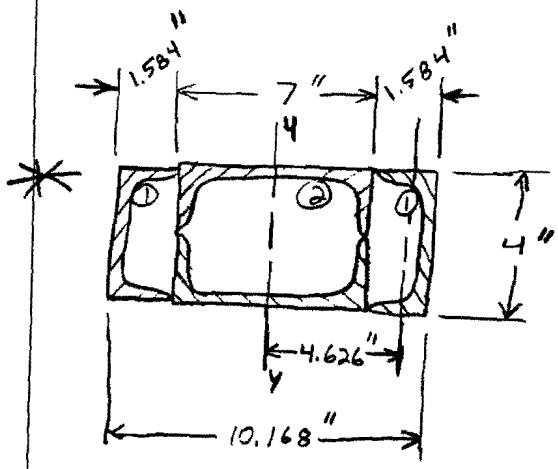

$$A = 2A_1 + 2A_2 = 2(1.59) + 2(3.60)$$
$$= 10.38 \text{ in}^2$$

(y-y) $I_{1,c} = 2(0.319) = 0.638 \text{ in}^4$

$I_{2,c} = 2(24.2) = 48.4 \text{ in}^4$

$$I_{TOT} = I_{1c} + I_{2c} + 2A_1 d^2$$
$$= 0.638 + 48.4 + 2(1.59)(4.626)^2$$
$$= \underline{117.09 \text{ in}^4}$$

$$S = \frac{I}{c} = \frac{117.09}{\left(\frac{10.168}{2}\right)} = \underline{23.03 \text{ in}^3}$$

M_{max} (page 1) $= 335$ in-k

$$f_b = \frac{M}{S} = \frac{335}{23.03} = 14.55 \text{ ksi}$$

$$\frac{14.55}{36} = \boxed{0.40 F_y \leq .66 F_y} \quad \underline{OK}$$

this criteria was already met, but a greater stiffness was required to reduce deflections.

* only single sided within radius of cylinder.

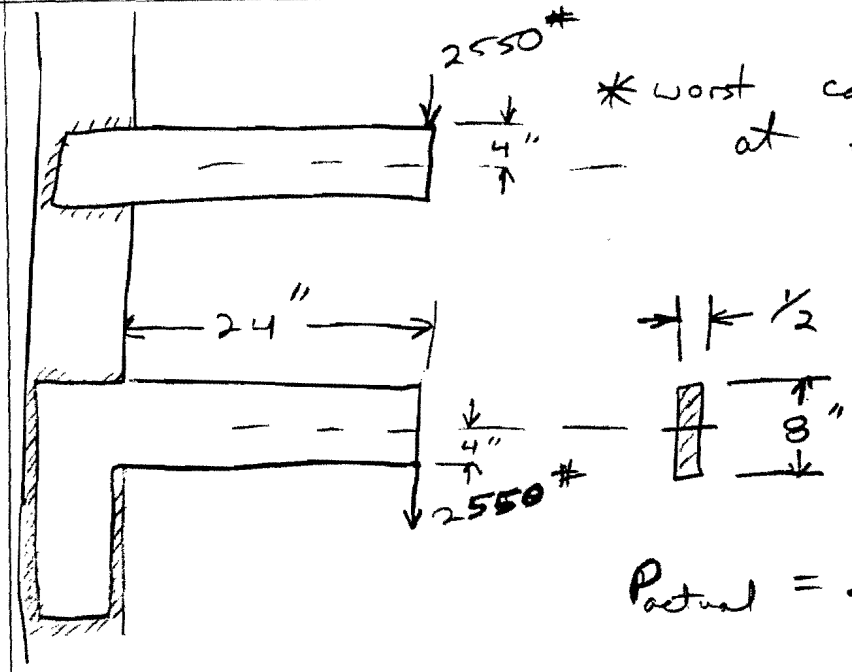

* worst case loading at ends

Head load ≈ 9000#
Cyl. weight ≈ 1200#
total load on bars ≈ 10200#

@ bar = $\frac{10200}{4}$
= 2550#

$P_{actual} = 2550\#$

buckling

(Roark p 544 ex. 12)

$$P' = \frac{0.669\, b^3 d \sqrt{\left(1-0.63\frac{b}{d}\right) EG}}{l^2}\left[1 - \frac{a}{2l}\sqrt{\frac{E}{G\left(1-0.63\frac{b}{d}\right)}}\right]$$

$b = 1/2''$
$d = 8''$
$a = 4''$
$l = 24''$

$P' = 17980\#$

in the worst situation only two of the welds (either both top or both bottom welds) will carry the load. This would give a

$$P_{actual} = \boxed{5100\# < P'}$$

OK

DIAGONAL BRACES:

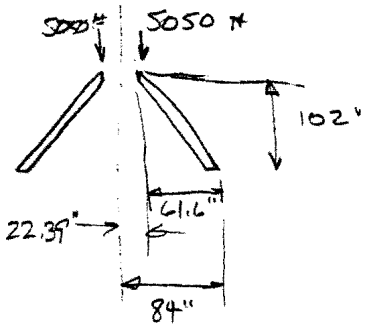

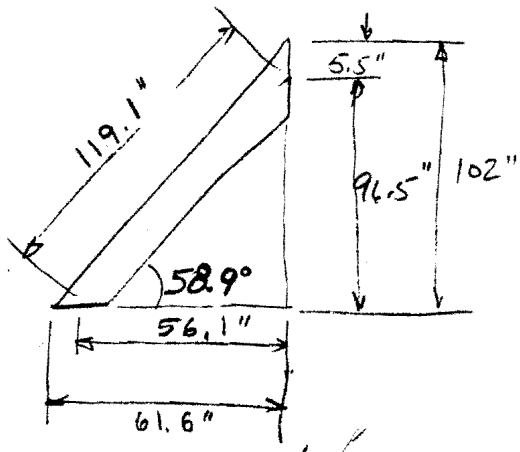

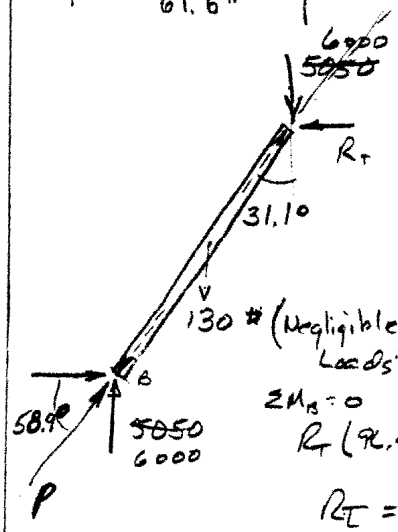

$\Sigma M_B = 0$

$R_T(96.5) = 6000(56.1)$

$R_T = 3488$

$R_B = R_T = 3500\#$

$P = \frac{6000}{\cos 31.1°} = 7007\#$

use 7000#

Try C7x12.25#

$A = 3.60 \text{ in}^2$ $r = 2.6, .571$

Sect. 1.9

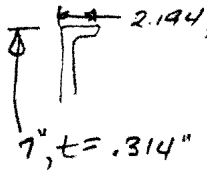

1.9.1.2

$\frac{2.194}{.366} = 6 = \frac{36}{\sqrt{F_y}}$ OK $< \frac{76}{\sqrt{F_y}}$

1.9.2.2

$\frac{7}{.314} = 22.3 = \frac{134}{\sqrt{F_y}}$ OK $< \frac{253}{\sqrt{F_y}}$

1.5.1.3

$\frac{Kl}{r} = \frac{0.65(118.3)}{0.571} = 134.7$

$C_c = \sqrt{\frac{2\pi^2(29E3)}{36}} = 126.1$

$F_a = 7.3$ (Table 3.36, AISC)

$f_a = \frac{1000}{36} = 1.94 \text{ KSI} < 7.3$

OK

CHECK BOX BEAM @ INTERSECTION

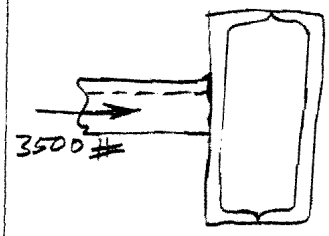

Consider side of box as flat plate w/ central load.

Look @ Cylinder

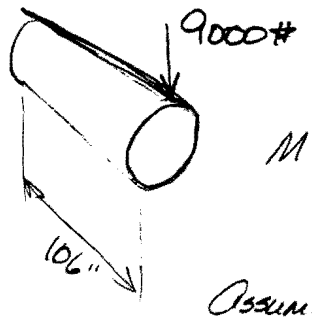

$M = 9000^{\#}(106")$
$= 954$ in-k

Assume 1/4" shell, 48" ϕ

336 in³

$S = \frac{\pi}{4}(R_o^3 - R_i^3)$

$= \frac{\pi}{4}(24^3 - 23.75^3)$

$= 336 \text{ in}^3$

$f_b = \frac{M}{S} = \frac{954}{336} = 2.8$ ksi

Check Buckling Per ASME Code. Assume 2.8 ksi uniform axial compression & use UG-23(b)

$A = \frac{0.125}{(R_o/t)} = \frac{.125}{24/.25)}$

$= \frac{.125}{96} = .00130$

Fig 5-UCS-28.1:

$B = 11500 > 2800$ psi OK

Check Shear Stress:

$\tau_{max} \approx 2\frac{V}{A} = \frac{2(9.0)}{\pi(48)(.25)} = 0.5$ ksi

OK

Check Rear Bottom Rail

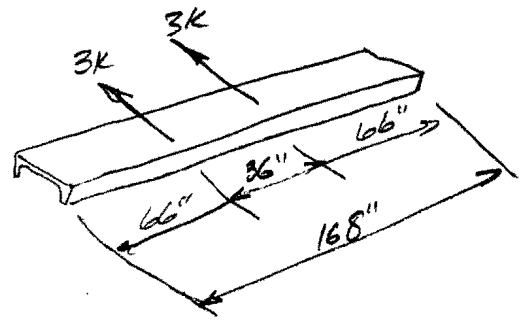

$M_{MAX} = 3(66) = 198$ in-k

$f_b = \frac{M}{S} < 0.66 F_y = 0.66(36) = 23.76$ ksi

$f_b = \frac{198}{6.93} = 28.6$ ksi > 23.76 No Good

Try making a box

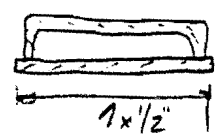

$I = 24.2 + \frac{1}{12}(\frac{1}{2})(1)^3$

$= 24.2 + 14.3$

$= 38.5 \text{ in}^4$

$S = \frac{38.5}{3.5} = 11.0$

$f_b = \frac{198}{11.0} = 18$ ksi

if we use Gen'l purpose plate,

$F_y = 0.9(30) = 27$ ksi

$F_b = 0.66 F_y = 0.66(27) = 17.8$ No Good

∴ use 2 channels in center.

Determine length of beam not requiring box:

$S = 6.93 \text{ in}^3$ C7x12.25

$f_b < 23.76$

$\frac{M}{S} < 23.76$

$M < 23.76(6.93)$

$M < 164.7 \text{ in-k}$

$R \times L < 164.7$

$3 \times L < 164.7$

$L < \frac{164.7}{3}$

$L < 54.9''$ (from ends)

Assume 48" @ each end do not require anything in excess of C7x12.25.

Use Double channel box over center 6 feet of beam.

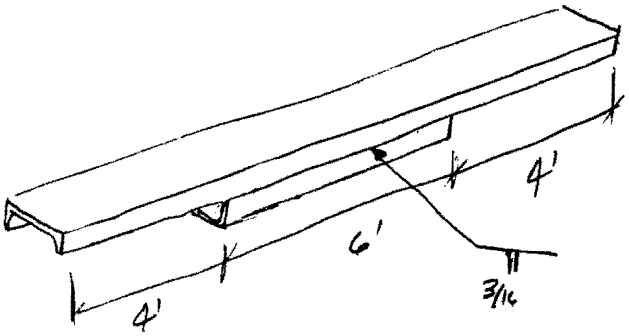

* No change *

Size Diagonal Braces for Base

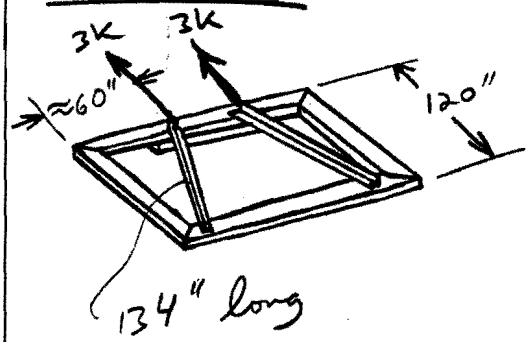

(ends fixed) $K = 0.65$

$$\frac{0.65\,l}{r} \leq 200$$

$r_{min} = 0.49''$

$l = 134''$

$$\frac{0.65(134)}{.49} = 177 \leq 200$$

OK

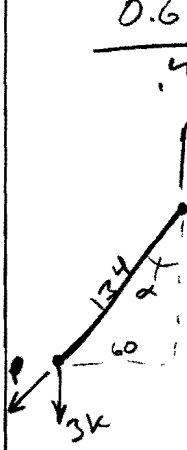

$P = \frac{3^K}{\cos 26.6^\circ} = 3.4^K$

$\alpha = \tan^{-1}\frac{60}{120} = 26.57^\circ$

$f_a = \frac{3.4}{1.19} = 2.9 \text{ ksi}$

$F_a = 0.6\,F_y = 0.6(36)$

$= 21.6$

OK

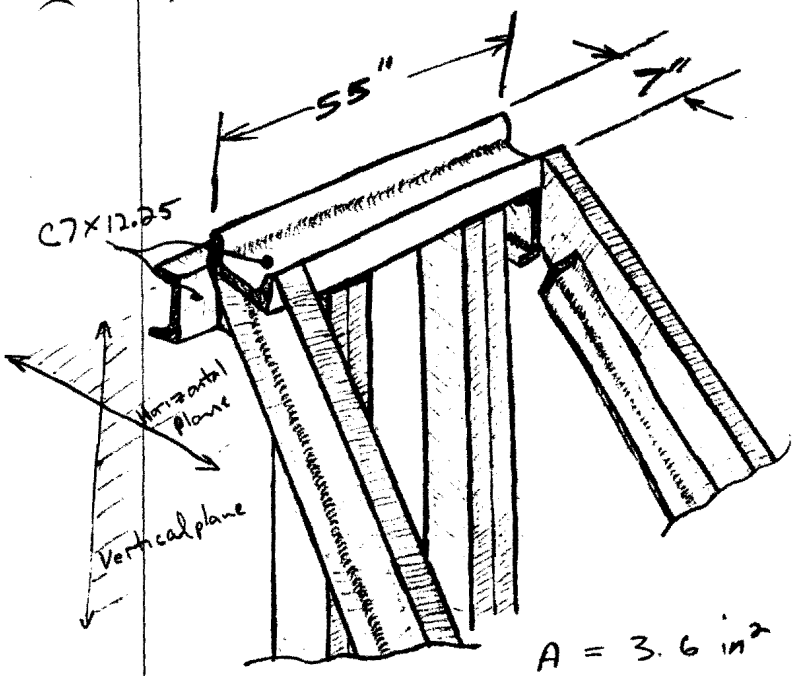

$A = 3.6 \text{ in}^2$

$S = \frac{24.2}{3.5} = 6.9 \text{ in}^3$

Horizontal Plane

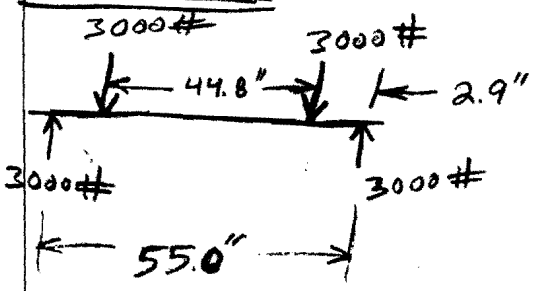

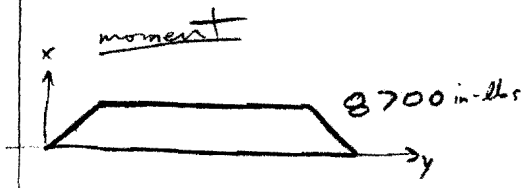

bending

$$\sigma_b = \frac{M}{S} = \frac{8700}{\left(\frac{39.86}{5.5125}\right)} = 1.2 \text{ ksi}$$

ok

shear

$$\tau_v = \frac{3000}{2(3.6)} = 0.42 \text{ ksi}$$

ok

Vertical Plane

* assume total vertical load (10100 lbs) is supported by end C-Channels (Worse Case)

(see below for I_{xx})

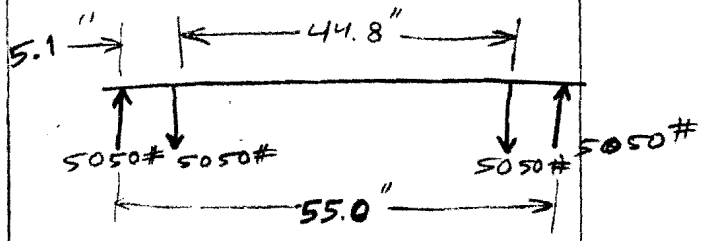

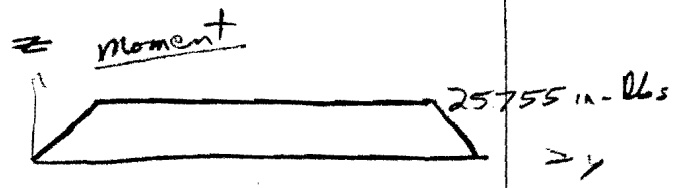

bending

$$\sigma_b = \frac{M}{S} = \frac{25755}{\left(\frac{39.86}{5.5125}\right)} = 3.6 \text{ ksi}$$

Ok

shear

$$\tau_v = \frac{5050}{2(3.6)} = 0.7 \text{ ksi}$$

OK

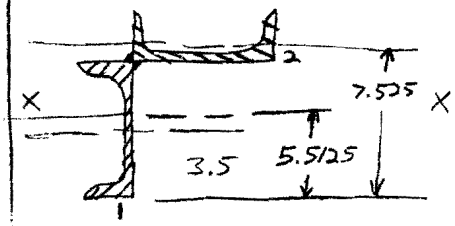

$I_{1x_c} = 24.2 \text{ in}^4$

$I_{2x_c} = 1.17 \text{ in}^4$

$A = 3.6 \text{ in}^2$

$$I_{xx} = I_{1c} + I_{2c} + Ad_1 + Ad_2$$
$$= 24.2 + 1.17 + 3.6(5.5125 - 3.5) + 3.6(7.525 - 5.5125)$$
$$= 39.86 \text{ in}^4$$

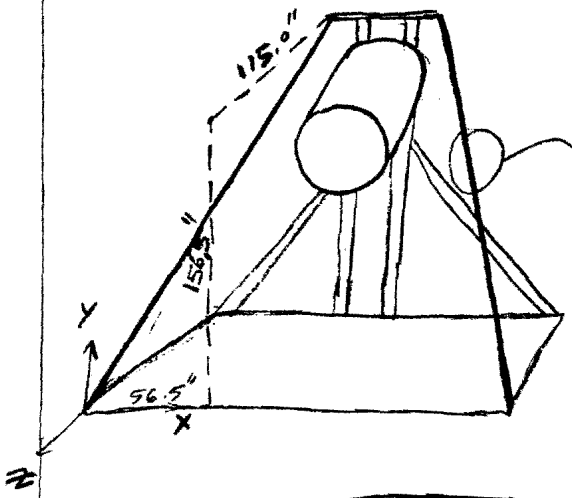

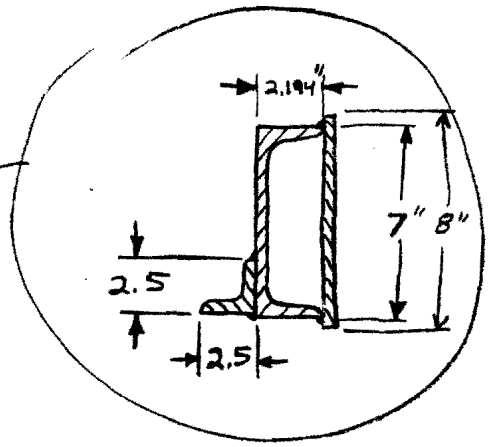

$$l = \sqrt{(56.5)^2 + (156.5)^2 + (115.0)^2}$$

$$= 202.3''$$

C 7 x 12.25
L 2½ x 2½ x ¼
½" x 8" plate

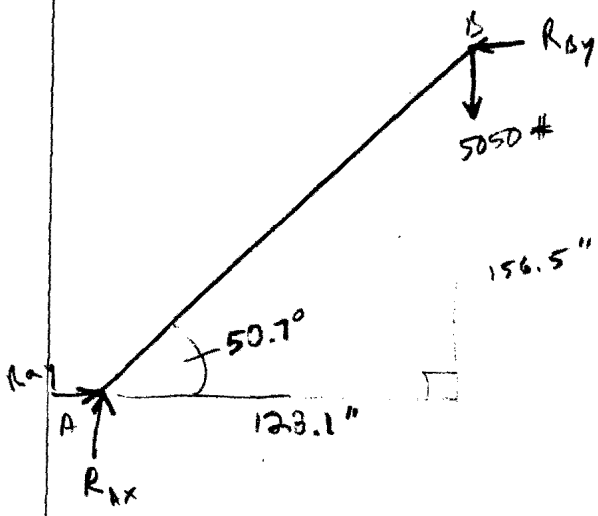

$$\Sigma M_A = 0 = R_{BY}(156.5) - 5050(128.1)$$

$$R_{BY} = 4133.6\ \#$$

$$F_R = \sqrt{R_{BY}^2 + 5050^2} = 6526\ \text{lbs}$$

<u>compression</u>

$$\sigma_{comp} = \frac{F_R}{A} = \frac{6526}{(3.6+4+1.19)} = 0.7\ \text{ksi}$$

<u>OK</u>

for buckling, see next page

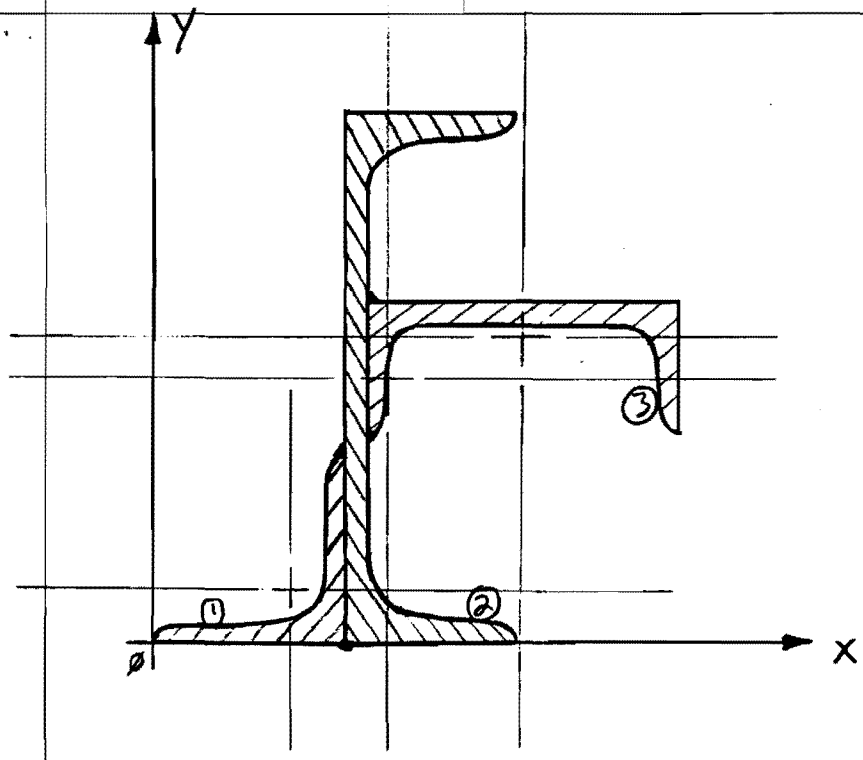

$A_1 = 1.19 \text{ in}^2$

$A_2 = 3.6 \text{ in}^2$

$A_3 = 2.13 \text{ in}^2$

$\bar{x}_1 = 1.783 \text{ in}$

$\bar{x}_2 = 3.025 \text{ in}$

$\bar{x}_3 = 4.814 \text{ in}$

$\bar{y}_1 = 0.717 \text{ in}$

$\bar{y}_2 = 3.5 \text{ in}$

$\bar{y}_3 = 4.0 \text{ in}$

$I_{1\bar{y}} = 0.703 \text{ in}^4$

$I_{2\bar{y}} = 1.17 \text{ in}^4$

$I_{3\bar{y}} = 4.59 \text{ in}^4$

$I_{1\bar{x}} = 0.703 \text{ in}^4$

$I_{2\bar{x}} = 24.2 \text{ in}^4$

$I_{3\bar{x}} = 0.433 \text{ in}^4$

$$\bar{x} = \frac{1.19(1.783) + 3.6(3.025) + 2.13(4.814)}{(1.19 + 3.6 + 2.13)} = \underline{3.36 \text{ in}}$$

$$\bar{y} = \frac{1.19(0.717) + 3.6(3.5) + 2.13(4.0)}{(1.19 + 3.6 + 2.13)} = \underline{3.18 \text{ in}}$$

$$I_{\bar{x}} = I_{1\bar{x}} + I_{2\bar{x}} + I_{3\bar{x}} + A_1(\bar{y}_1 - \bar{y})^2 + A_2(\bar{y}_2 - \bar{y})^2 + A_3(\bar{y}_3 - \bar{y})^2$$

$$= 0.703 + 24.2 + 0.433 + 1.19(0.717 - 3.18)^2 + 3.6(3.5 - 3.18)^2 + 2.13(4 - 3.18)^2$$

$$= \underline{34.36 \text{ in}^4}$$

$$I_{\bar{y}} = I_{1\bar{y}} + I_{2\bar{y}} + I_{3\bar{y}} + A_1(\bar{x}_1 - \bar{x})^2 + A_2(\bar{x}_2 - \bar{x})^2 + A_3(\bar{x}_3 - \bar{x})^2$$

$$= 0.703 + 1.17 + 4.59 + 1.19(1.783 - 3.36)^2 + 3.6(3.025 - 3.36)^2 + 2.13(4.814 - 3.36)^2$$

$$= \underline{14.33 \text{ in}^4}$$

$$r_{\bar{y}} = \sqrt{\frac{I_{\bar{y}}}{A}} = \sqrt{\frac{14.33}{1.19 + 3.6 + 2.13}} = 1.44 \text{ in}$$

$$r_{\bar{x}} = \sqrt{\frac{I_{\bar{x}}}{A}} = \sqrt{\frac{34.36}{1.19 + 3.6 + 2.13}} = 4.97 \text{ in}$$

OK

$K = 1.2$ (p 5-125 AISC Manual of Steel Construction Table C1.8.1 (c))

$$\frac{KL}{r_{\bar{y}}} = \frac{1.2(202.3)}{1.44} = \boxed{168.6 \leq 200}$$

SIZE RING STIFFENER FOR HEAD CART CYLINDER.

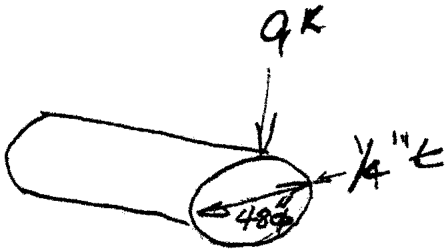

TREAT AS A RING:

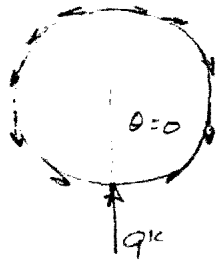

@ θ=0

ROARK & YOUNG, P236, Case 18

$M_{MAX} = .2387 WR$ @ bottom

LIMIT BENDING TO $0.6F_y$

Where $F_y = 27$ ksi (Gen'l Purp CS plate)

$0.6F_y = 16.2$ ksi

$$\frac{M}{S} < 16.2 \text{ ksi}$$

$$\frac{.2387 W R_{MAX}}{16.2} < S$$

$$\frac{.2387(9)(48)}{16.2} < S$$

$$S > 6.37 \text{ in}^3$$

$.78\sqrt{rt} = .78\sqrt{(48)(.25)} = 2.7"$

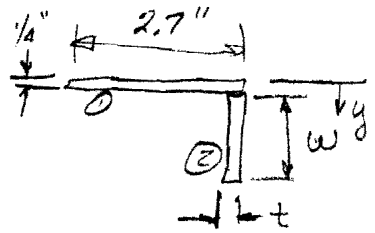

try 1/2" x 6"

	A	y	Ay	Ad²	I₀
①	.675	.125	.0844	4.39	—
②	3.0	3.25	9.75	.99	9.0
	3.675		9.834	I = 14.38	

$\bar{y} = 2.676$ $\quad S = 5.37, 4.02$

try 1/2" x 9"

	A	y	Ay	Ad²	I₀
①	.675	.125	.0844	10.92	—
②	4.5	4.75	21.375	1.64	30.38
	5.175		21.459	I = 42.93	

$\bar{y} = 4.147$ $\quad S = 10.35, 8.412$ OK

CHECK WEB CRIPPLING

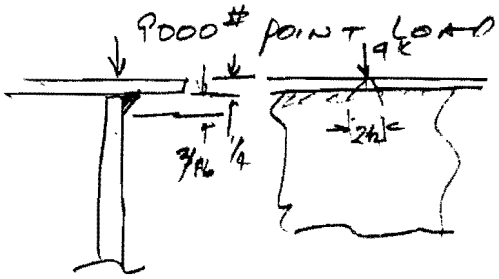

$$\frac{R}{t(N+2k)} < 0.75F_y$$

$$\frac{9}{.25(0+2(7/16))} < .75(27)$$

$$41.1 < 20.25$$

Try 1/2"

$$\frac{9}{.5(2(7/16))} = 20.6 \approx 20.25$$

OK

Since actual load will not act at point.

Concentrated load

assume pt load

Roark, p 300, case 7.

$$S_b = \frac{2.4P}{t^2} = \frac{2.4(9)}{(.25)^2} = 350 \text{ KSI} - \text{NO GOOD}$$

Use WRC-107

MEMBRANE STRESSES ARE TYPICALLY SMALL. ∴ LIMIT BENDING STRESS TO 1.5S = F_y. CHECK LONG STRESS ON LONG. AXIS. $F_y = 27$ KSI

$$\frac{r_m}{T} = \frac{48}{.25} = 192$$

$$27 \text{ KSI} = \left(\frac{M_x}{P}\right) \frac{6P}{T^2}$$

$$\frac{27(.25)^2}{6(9)} = \left(\frac{M_x}{P}\right)$$

$$\left(\frac{M_x}{P}\right) = .03125 \text{ MAX}$$

from Fig 1C-1

$$\beta_{min} = 0.15 = .875 \frac{r_o}{r_m}$$

$$r_{o\,min} = \frac{.15(48)}{.875}$$

$$= 8.2'' \quad \underline{\text{NO GOOD}}$$

∴ Put ring under load point for South Heads

Check North head.

$W_T \approx 6650\#$ use $7000\#$

$$\left(\frac{M_x}{P}\right)_{MAX} = \frac{27(.25)^2}{6(7)} = .0402$$

$$\beta = .135 = .875\frac{r_o}{R_m}$$

$$r_o = \frac{.135(48)}{.875}$$

$$= 7.5''$$

Try 1/2" Cover Plate

$$\frac{R_m}{T} = \frac{48}{.75} = 64$$

$$27 = \left(\frac{M_x}{P}\right)\left(\frac{6P}{T^2}\right)$$

$$\frac{M_x}{P} = \frac{27(.75)^2}{6(7)}$$

$$= .362$$

$\beta_{min} \leq .02$

$$r_o \approx \frac{.02(48)}{.875}$$

$$= 1.1'' \quad \underline{\underline{OK}}$$

Use 1/2" Cover plate in area of north head support. ∴ Need 1/2" Plates @ ends to support south head.

TRY CHANNEL ON TOP OF ARC

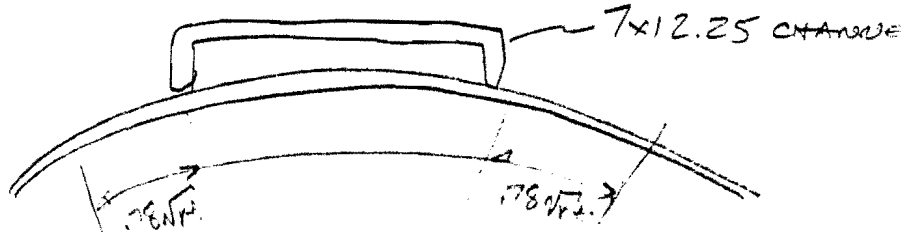

$.78\sqrt{48(1/4)} = 2.7''$

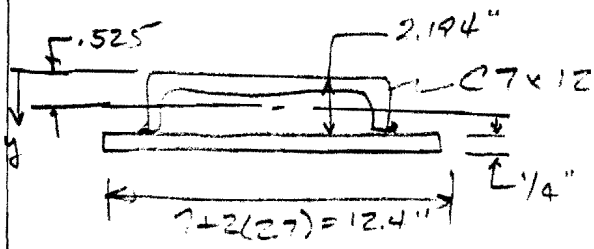

$I = 1.17 \text{ in}^4$

	A	y	Ay	Ad²	I₀
Chan.	3.6	.525	1.89	2.48	1.17
Pl.	3.1	2.319	7.19	2.88	—
	6.7		9.08		

$I = 6.53 \text{ in}^4$

$\bar{y} = 1.355$ $\quad S = 4.82,\ 2.0$

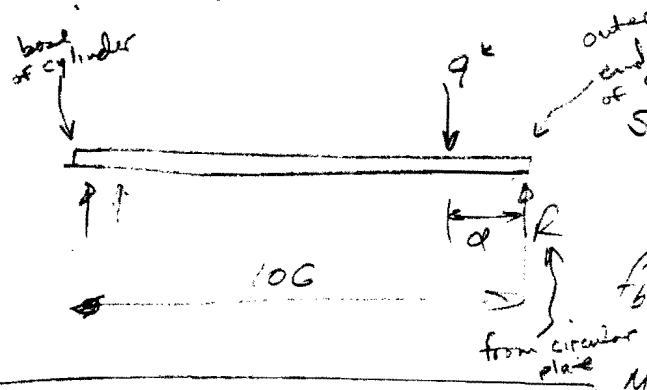

SHEAR OK BECAUSE OF CYLINDER.

$F_b = .6F = .6(36) = 21.6 \text{ ksi}$

$f_b = \frac{M}{S} < F_b$

$M < F_b S = 21.6(4.82) = 104.112$

$M = 104.112 = R\,d$

if $R = 9$ (Conservative)

$d < \frac{104}{9} = 11.6''$

if $d = 11.6$, $R = 9\left(\frac{106 - 11.6}{106}\right) = 8.0$

$M = Rd = 8d < 104.112$

$d = 13''$ OK

$\boxed{d_{max} = 13''}$

left at 13" to keep $f_b < F_b$ (21.6)

~~@ P = 7k let d = 36"~~

~~$M = \frac{P(36)(70)}{106} = 166$ NO GOOD~~

~~TRY 24"~~

~~$M = \frac{P(24)(82)}{106} = 130$~~

~~TRY 18"~~

~~$M = \frac{P(18)(88)}{106} = 104.6$~~

~~let $d_{max} = 18''$~~

* Changed *

Disc @ END

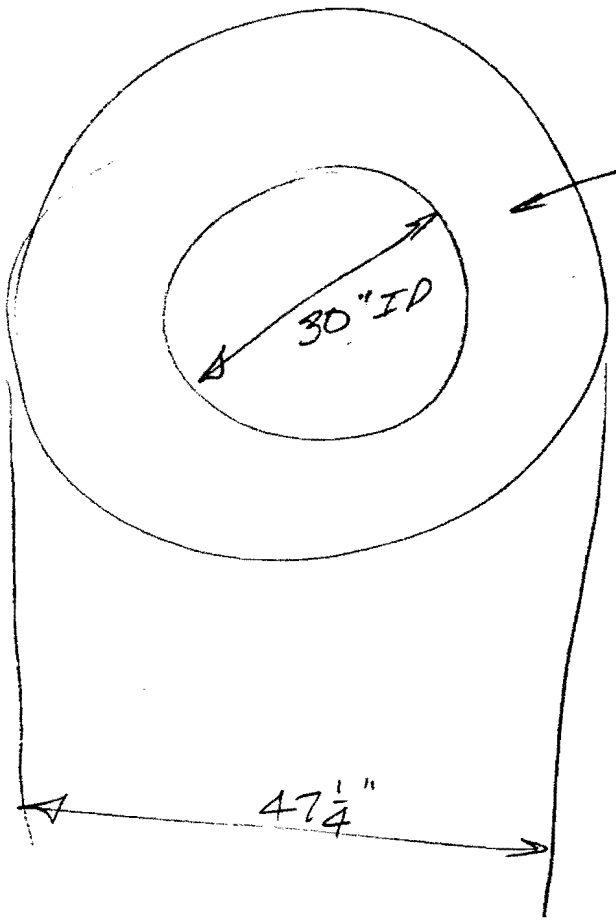

wt ≈ 150#

ADD 7x12.25 CHANNEL ALONG TOP OF CYC to support heads.

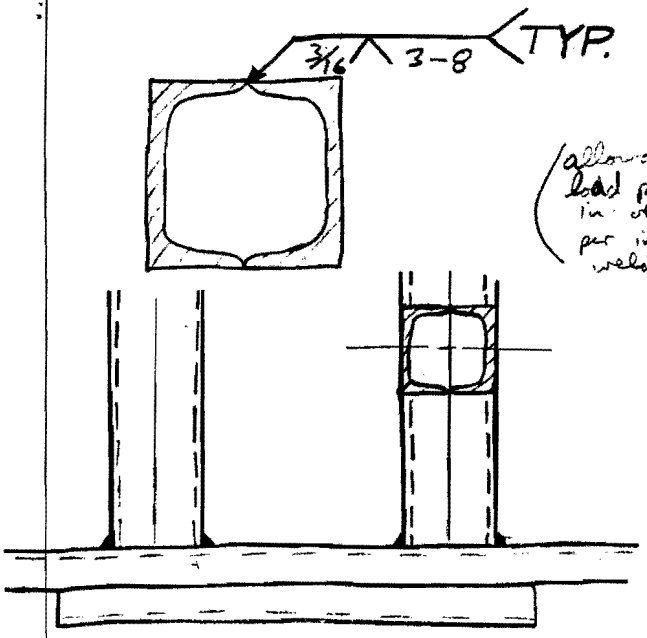

UPRIGHT Box Beams

(allowable load per line in. of weld per in. of weld size)

$$f = \sigma_{allow}(.707) = \frac{1}{2}(0.4)36(.707) = 5.09$$

$$f = f_t = 5.09$$

$$f_p = .75(f_t) = 3.82$$

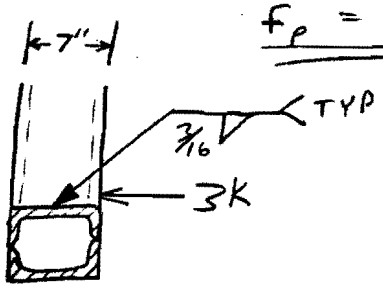

$$W_{max} = \frac{VQ}{nI} = \frac{3\ (3.6)(2.34)}{2\ (2(24.2))} = 0.2607 \text{ kip/in.weld}$$

$$w = \frac{W_{max}}{f} = \frac{0.2607}{5.09} = 0.05''$$

$\boxed{\text{use } 3/16'' \text{ weld}}$

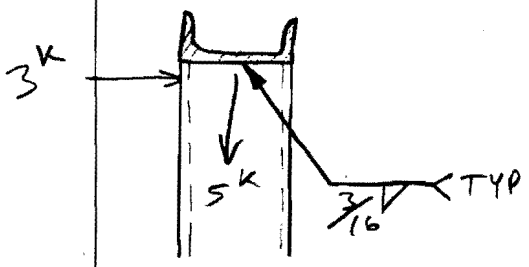

$$W_S = 0.26 \text{ kip/in}$$

$$W_H = \frac{5}{14} = 0.36 \text{ kip/in}$$

$$W = \sqrt{(0.36)^2 + \left[0.26\left(\frac{5.09}{3.82}\right)\right]^2}$$

$$= 0.5 \text{ kips/in}$$

$$w = \frac{0.5}{9.6} = 0.10''$$

$\boxed{\text{use } 3/16'' \text{ weld}}$

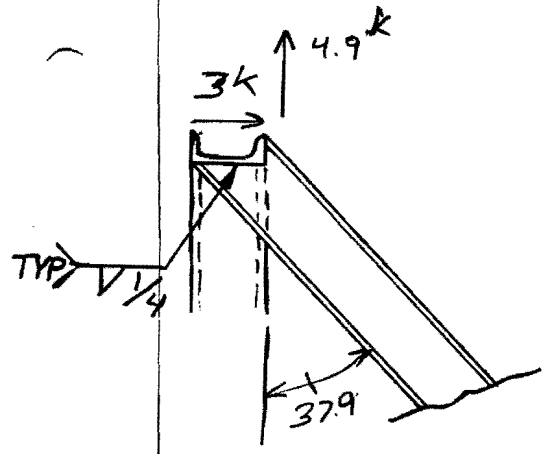

Dual Long Supports

$$W_s = \frac{VQ}{nI} = \frac{3(2.28)(2.97)}{1\ (33.67)}$$

$$W_s = .603 \text{ kips/in}$$

$$W_H = \frac{4.9}{8} = .6125 \text{ kips/in}$$

$$W = \sqrt{(.6125)^2 + \left(.603 \frac{5.09}{3.82}\right)^2}$$

$$= 1.01 \text{ kips/in}$$

$$w = \frac{W}{s} = \frac{1.21}{5.09} = 0.20$$

(use 1/4" weld)

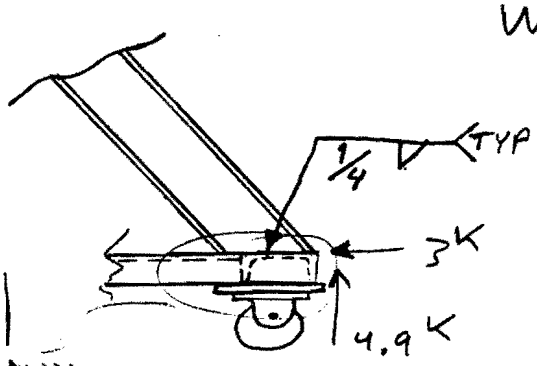

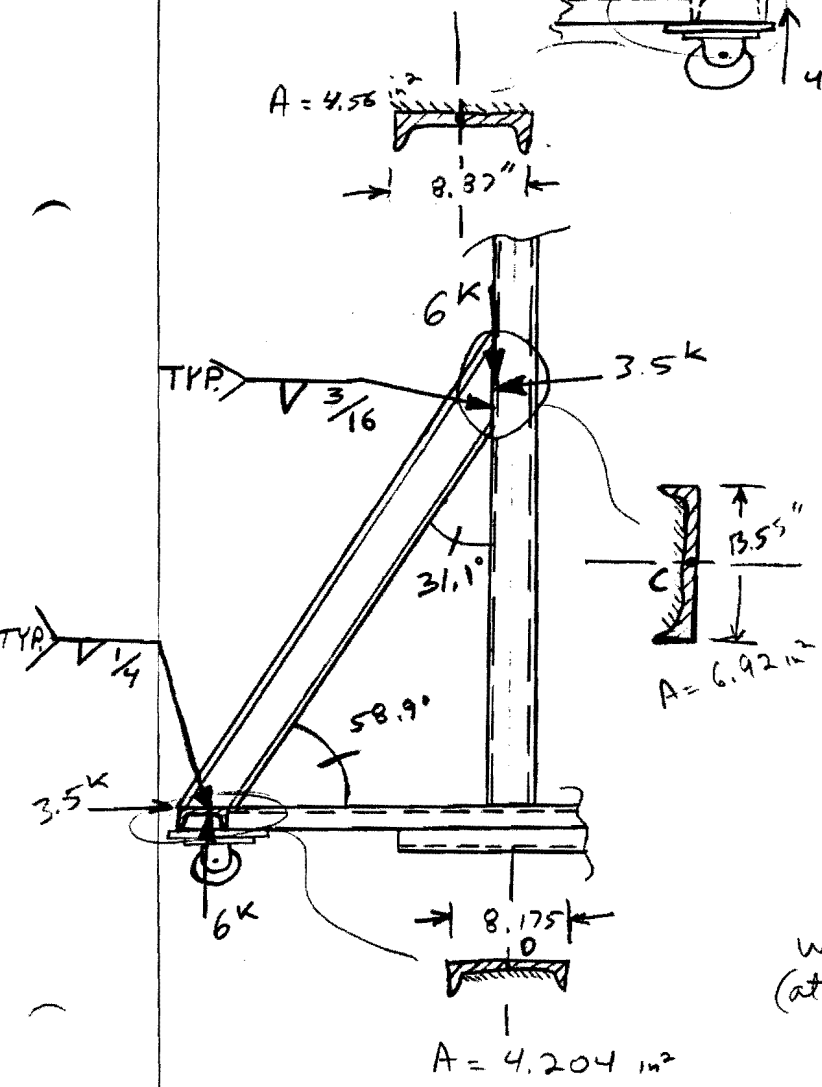

Dual Short Supports

$$W_{s\,max} \text{ (at C)} = \frac{VQ}{In} = \frac{6\ (3.46)(4.55)}{1\ (174)}$$

$$= 0.57 \text{ kips/in.}$$

$$W_H = 3.5/12.5 = 0.28 \text{ kips/in}$$

$$W = \sqrt{(0.28)^2 + \left(0.57 \frac{5.09}{3.82}\right)^2}$$

$$= 0.81$$

$$w = \frac{W}{s} = \frac{0.81}{5.09} = 0.159$$ use 3/16" weld

$$W_{max} \text{ (at D)} = \frac{VQ}{In} = \frac{3.5(2.102)(2.74)}{1\ (38.4)}$$

$$= 0.52 \text{ kips/in}$$

$$W_H = 6/7 = 0.86 \text{ kips/in}$$

$$W = \sqrt{(0.86)^2 + \left(0.52 \frac{5.09}{3.82}\right)^2} = 1.11$$

$$w = \frac{W}{s} = 0.22$$ use 1/4" weld

Rear Base

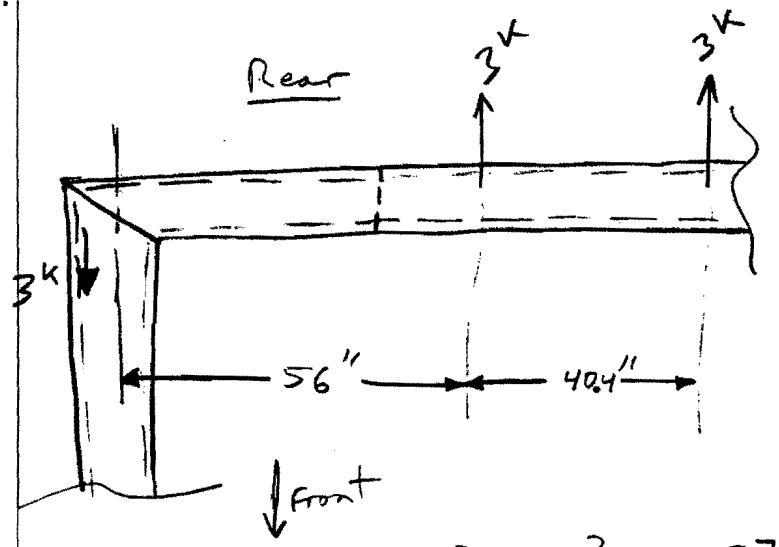

corner welds see a maximum tensile force of 3K.

$$M_{corner} = \frac{-3[(76.2)^2-(20.2)^2]}{2(76.2)} = 106 \text{ K-in}$$

$$M_{center} = \frac{3(76.2-20.2)^2}{2(76.2)} = 61 \text{ K-in}$$

Center of Rear Base

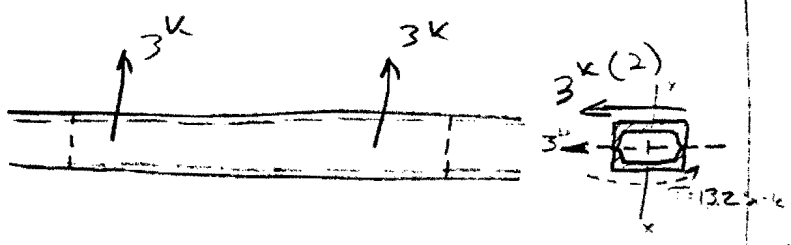

$I_{xx} = 48.4 \text{ in}^4$

$c = 3.5''$

$$\tau = \frac{T}{2(7)(4.4)(t_w)} \le 0.4 F_y$$

$$t_w > \frac{13.2}{2(7)(4.4)(.4)(36)}$$

$> .015''$

use 3/16" - 3-6

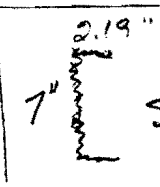

$$S_w = 7(2.19) + \frac{7^2}{6} = 23.5$$

$$W_b = \frac{M}{S_w} = \frac{106}{23.5} = 4.51$$

$$W_A = \frac{F}{A_w} = \frac{3}{7+4.38} = .26$$

$W = W_b + W_A = 4.77 \text{ k/in}$

Find req'd depth of groove weld.

$A_{w\text{-}req'd} =$ 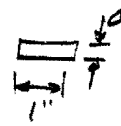

$= d$

$$f_a = \frac{4.77/\text{in}}{d(\text{in})} \le 0.6 F_y = 0.6(36)$$

$$d > \frac{4.77}{0.6(36)} = 0.22$$

1/4" Groove req'd

Cylinder Plates

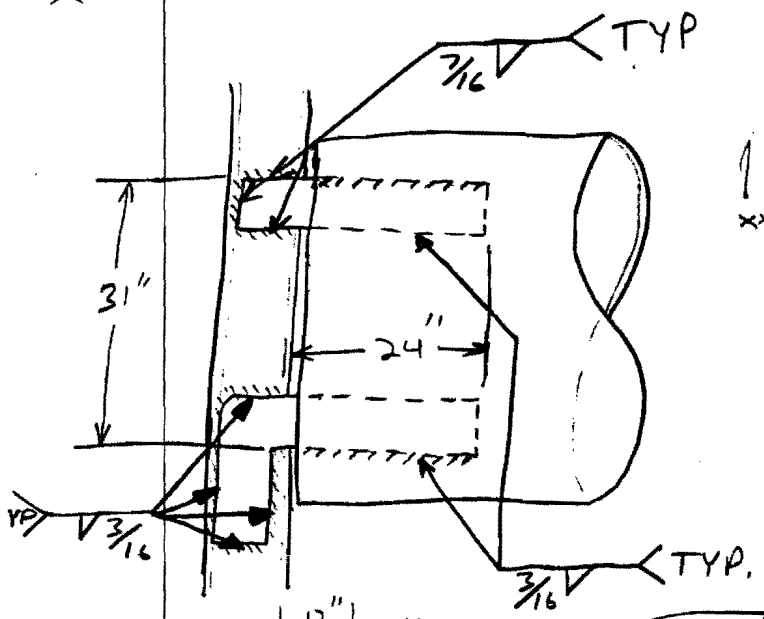

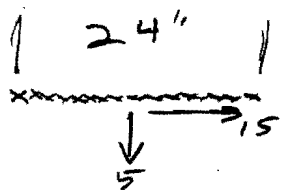

$$W_s = \frac{15}{24} = 0.625 \ k/in$$

$$W_H = \frac{5}{24} = 0.21 \ k/in$$

$$W = \sqrt{(.21)^2 + \left[0.625\left(\frac{5.09}{3.82}\right)\right]^2}$$

$$= .86$$

$$w = \frac{W}{f} = \frac{.86}{5.09} = 0.17$$

$$\boxed{\text{use } 3/16'' \text{ weld}}$$

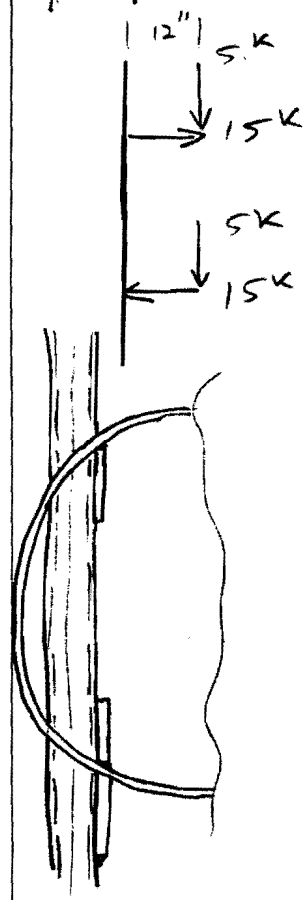

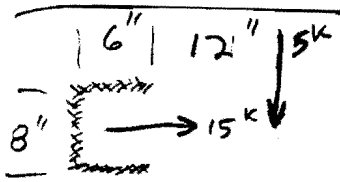

$$J_w = \frac{[2(6)+8]^3}{12} - \frac{6^2(6+8)^2}{2(6)+8}$$

$$= 313.9 \ in^3$$

$$\bar{x} = \frac{6^2}{2(6)+8} = 1.8''$$

$$c_v = 4''$$

$$c_h = 6 - \bar{x} = 4.2''$$

$$W_H = \frac{T c_v}{J_w} = \frac{5(12+4.2)\ 4}{313.9}$$

$$= 1.032 \ kips/in$$

$$W_v = \frac{T c_H}{J_w} = 1.084 \ kips/in$$

$$W_{SV} = \frac{5}{6+6+8} = 0.25 \ kips/in$$

$$W_{SH} = \frac{15}{6+6+8} = 0.75 \ kips/in$$

$$W = \sqrt{(1.084 + 0.25)^2 + [(1.032 + 0.75)]}$$

$$= 2.22 \text{ kips per line in.}$$

$$w = \frac{W}{f} = \frac{2.22}{5.09} = 0.437$$

$$\boxed{\text{use } 7/16'' \text{ weld}}$$

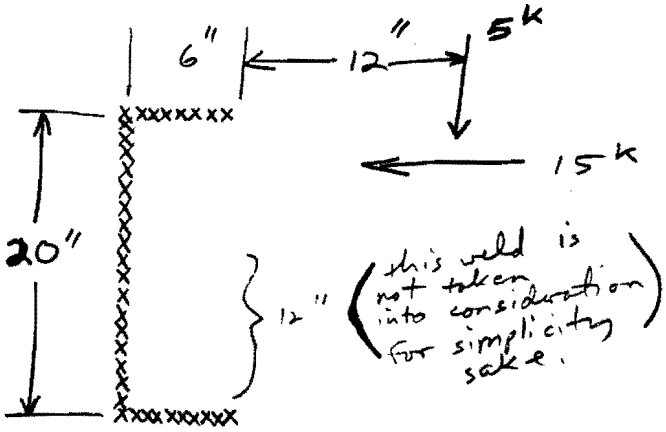

Cylinder Plates (con't)

$$J_w = \frac{(2(6)+20)^3}{12} - \frac{(6)^2(6+20)}{2(6)+20}$$

$$= 1970.2 \text{ in}^3$$

$$\bar{x} = \frac{(6)^2}{2(6)+20} = 1.125''$$

$$c_v = 10''$$

$$c_h = 6 - \bar{x} = 4.875''$$

$$W_H = \frac{T\,c_v}{J_w} = \frac{5(12+4.875)\,10}{1970.2}$$

$$= 0.43 \text{ kips/in}$$

$$W_v = \frac{T\,c_H}{J_w} = \frac{5(12+4.875)\,4.875}{1970.2}$$

$$= 0.21 \text{ kips/in}$$

$$w_{sv} = \frac{5}{20+6+6} = 0.16 \text{ kips/in}$$

$$w_{sH} = \frac{15}{20+6+6} = 0.47 \text{ kips/in}$$

$$W = \sqrt{(0.43+0.47)^2 + (0.21+0.16)^2}$$

$$= 0.97 \text{ kips/in}$$

$$w = \frac{0.97}{5.09} = 0.19\ *$$

$$\boxed{\text{use } 3/16'' \text{ weld}}$$

* Since approximately 12" of weld was not included in calcs, a 3/16" (= 0.1875) should be sufficient.

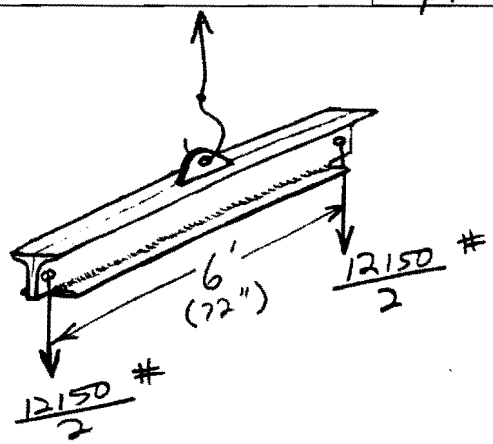

This spreader beam will be used to lift a J and D shielding blocks (~12150#) in order to load test the CC Cryostat Head Cart.

Material = A36 structural steel

$\sigma_{A36} = 36$ ksi

$\sigma_{allow} = \frac{36}{3} = 12$ ksi

per ANSI/ASME B30.20 (design factor of 3) = ½(AISC)

bending

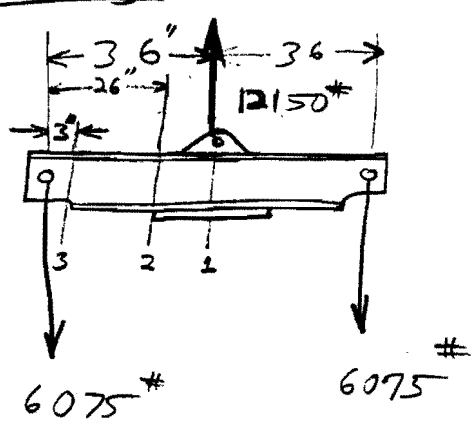

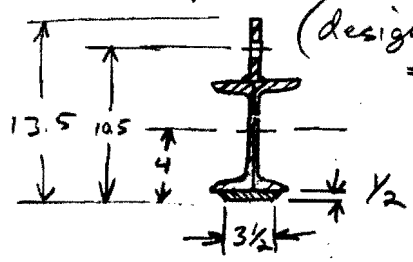

$$\bar{y} = \frac{2(3.6)\,4 + \frac{1}{2}(3.5)\,\frac{1}{4} + \frac{1}{2}(6)(10.5) - \frac{1}{2}(2)\,10}{\frac{1}{2}(3.5) + 2(3.6) + \frac{1}{2}(6) - \frac{1}{2}(2)}$$

$= 4.59$ in

$$I = \tfrac{1}{2}(3.5)(0.5)^3 + 2(24.2) + \tfrac{1}{12}(0.5)\,6^3 - \tfrac{1}{12}(0.5)(2)^3 + \tfrac{1}{2}(3.5)(4.59-.25)^2 + 2(3.6)(4.59-4)^2 + \tfrac{1}{2}(6)(10.5-4.59)^2 - \tfrac{1}{2}(2)(10.5-4.59)^2$$

$= \underline{162.43 \text{ in}^4}$

$c_{max} = 13.5 - \bar{y} = \underline{8.91 \text{ in}}$

$M_1 = M_{max} = 6075(36)$
$= 218700$ in-lbs

$S = \frac{I}{c} = \frac{162.43}{8.91} = 18.23 \text{ in}^3$

$\sigma_{b_1} = \frac{M_{max}}{S} = \frac{218700}{18.23}$

$= \boxed{11.997 < 12 \text{ ksi}}$

Ok

$M_2 = 26\,(6075)$

$= 157950$ in-lbs

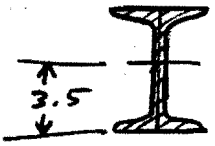

$I = 2(24.2)$

$= 48.4 \text{ in}^4$

$c_{max} = 3.5$ in

$\bar{y} = 3.5$ in

$S_2 = \frac{I}{c} = \frac{48.4}{3.5} = 13.83$

$\sigma_{b_2} = \frac{M_2}{S_2} = \frac{157950}{13.83}$

$= \boxed{11.422 < 12 \text{ ksi}}$

OK

$M_3 = 3\,(6075)$

$= 18225$ in-lbs

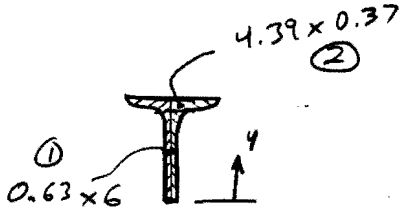

$S_3 = \frac{I}{c} = \frac{22.87}{3.96} = 5.78$

$\sigma_{b_3} = \frac{M_3}{S_3} = \frac{18225}{5.78}$

$= \boxed{3.156 < 12 \text{ ksi}}$

OK

$\bar{y} = \frac{11.34 + 10.02}{3.78 + 1.62}$

$= 3.96$ in

$A_1 d^2 \quad A_2 d^2$

$I = 11.34 + 0.02 + 3.45 + 7.44$

$= 22.87 \text{ in}^4$

$c_{max} = 3.96$ in

Shear

*Most critical at point 3.

$V = 6.075$ Kips

$A = 3.78 + 1.62 = 5.4$

$\sigma_v = \frac{V}{A} = \frac{6.075}{5.4} = 1.125$ ksi

$\boxed{1.125 < 7.2 \text{ ksi}}$ ok

Shear allowable:

(AISC) $F_v = 0.4 F_y$

$= 0.4(36)$

$\sigma_{v_{allow}} = \frac{1}{2} F_v = 7.2$ ks

Bearing

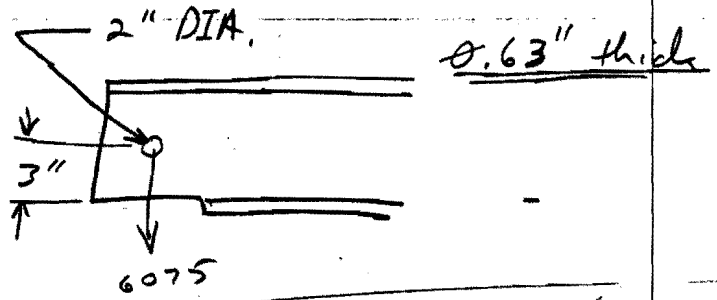

$F = 6.075$ kips

*assume 1" DIA shackle pins

$A = 1(.63) = 0.63$

$\sigma_p = \frac{F}{A} = 9.64$ ksi

$\boxed{9.64 < 32.4 \text{ ksi}}$

OK

bearing allowable:

(AISC) $F_p = 0.9 F_y = 0.9(36)$
$= 32.4$ ksi

$\sigma_{p_{allow}} = F_p = \underline{32.4 \text{ ksi}}$

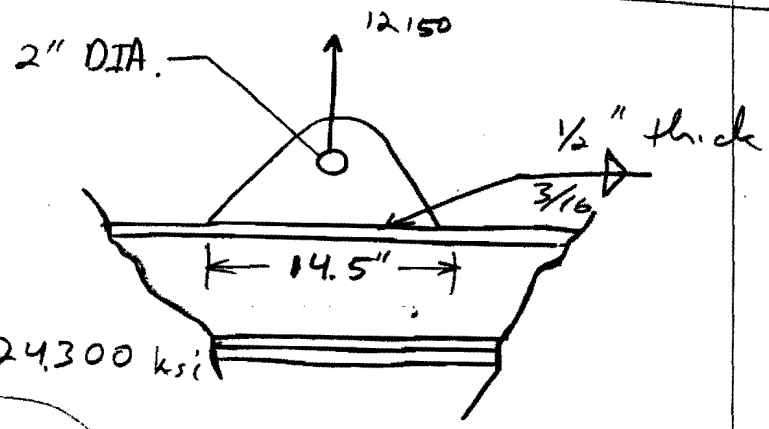

$F = 12,150$ kips

$A = 1(.5) = 0.5$ *

$\sigma_p = \frac{F}{A} = \frac{12,150}{0.5} = 24,300$ ksi

$\boxed{24.3 < 32.4 \text{ ksi}}$

ok

Welds

$L_w = 14.5(2) = 29''$

$F_w = 12.150$ kips

$f = \frac{12.15}{29} = 0.42$ kips/in

$\boxed{0.42 < 0.95 \text{ kips/in}}$

OK

see above

weld allowable: 3/16" weld

(AISC) $f = (0.4)(36)(3/16)(.707)$
$= 1.91$ k/in

$f_{allow} = \frac{1}{2} f = \underline{0.95}$ k/in

FRAME MAC file: HEAD CART III; Last modified at 11:24:48 AM on Mon, Aug 15, 1988
Above each load are the magnitudes in lb, lb/in, and lb-in.
Next to each support are reactions in lb and lb-in.
Next to each node are deformations in inch and radians.
Positive reactions and deformations are to the right, upwards, and counter-clockwise.

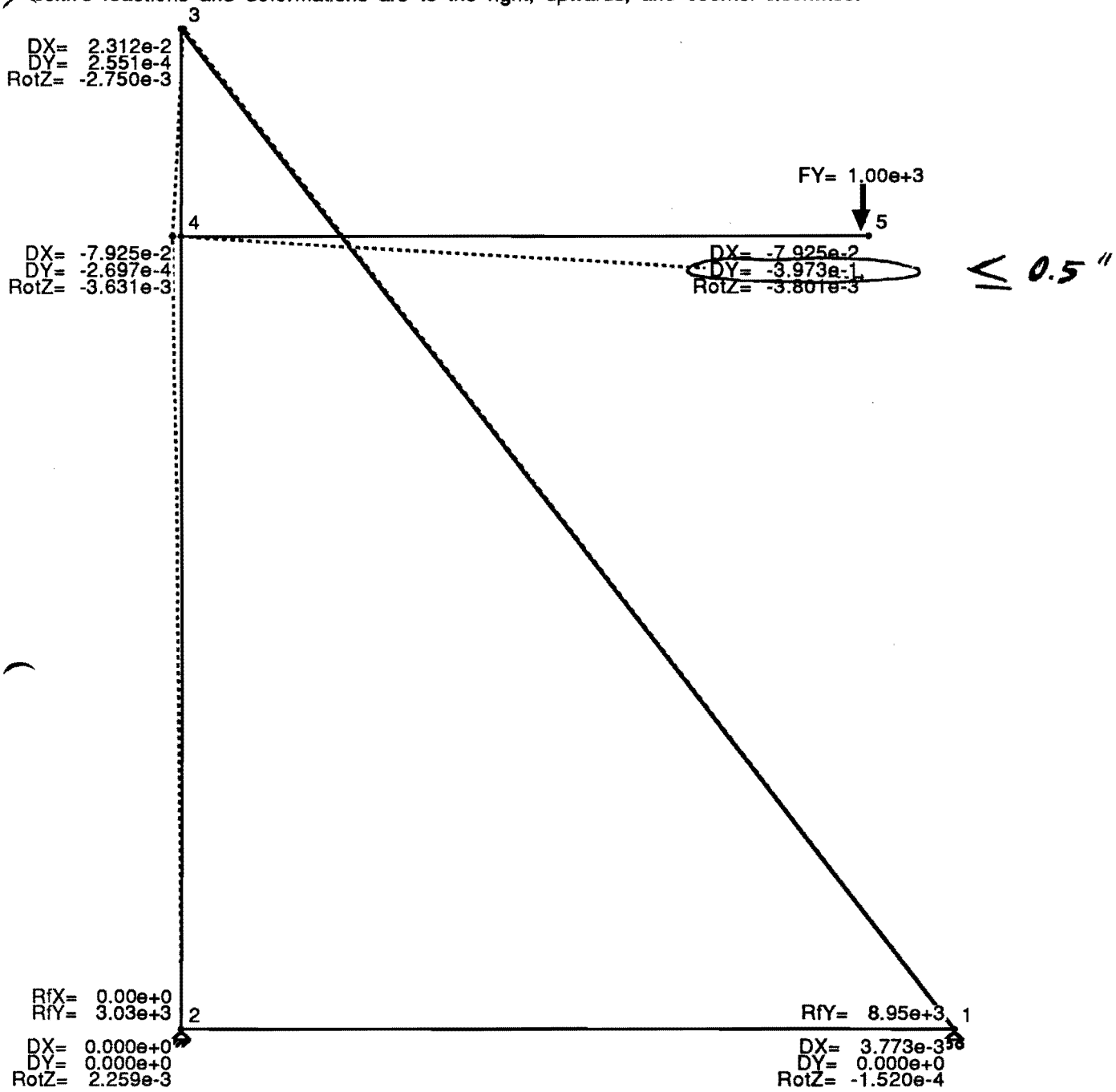

FRAME MAC file: HEAD CART; Last modified at 11:24:48 AM on Mon, Aug 15, 1988

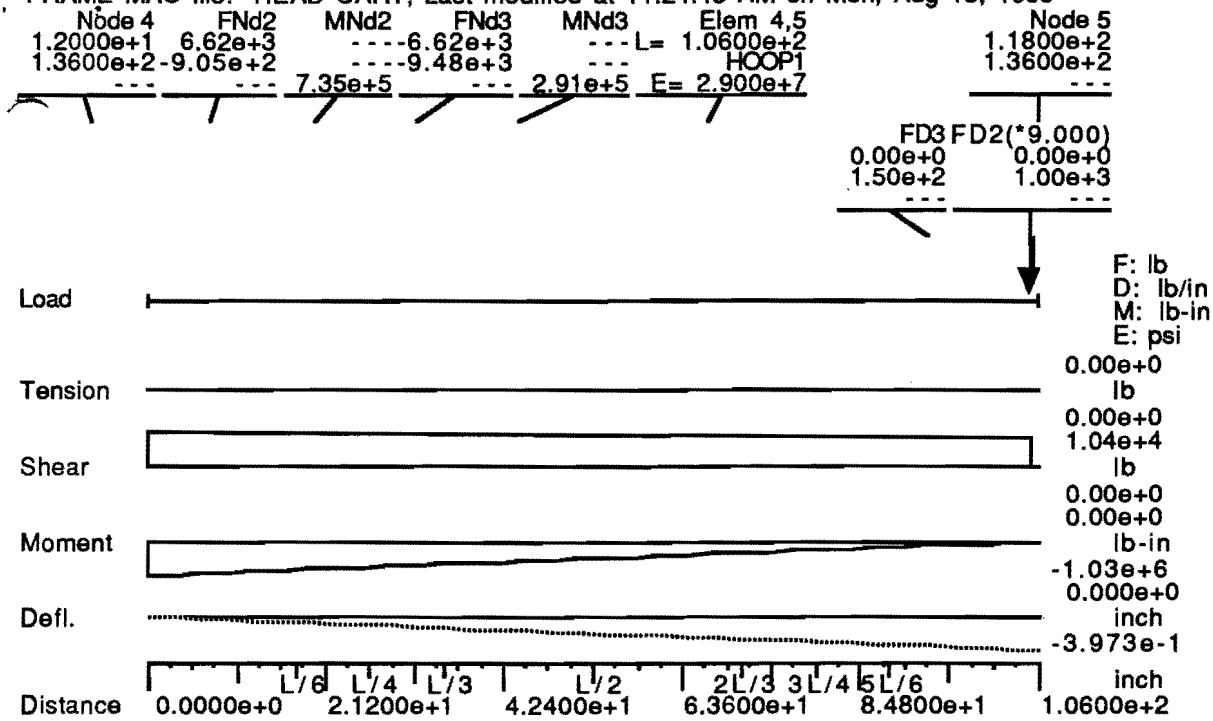

ANSYS Input file

```
/prep7
/title, "Head Cart Cylinder"
et,1,63
r,1,0.25
r,2,0.5
r,3,0.33
ex,1,29e06
dens,1,7.3308465e-4
gxy,1,11.5e06
acel,,386.04
nuxy,1,0.27
csys,1
n,1,23.875,90.0
n,2,23.875,81.57
n,6,23.875,40.721
fill
n,14,23.875,-40.721
fill
n,19,23.875,-90.0
fill
ngen,9,20,1,19,1,,,3.0
ngen,16,20,161,179,1,,,5.4
ngen,2,20,461,479,1,,,1.0
ngen,3,40,461,479,1,-4.4375
csys,0
ngen,2,560,2,482,20,,2.2
ngen,3,1,562,1042,20,-1.75
nrsel,node,564,1044,20
nmodif,all,1.0e-8
nall
csys,1
e,1,2,22,21
egen,18,1,1
egen,24,20,1,18
real,2
e,461,462,502,501
egen,18,1,433
egen,2,40,433,450
real,3
e,2,22,582,562
e,562,582,583,563
e,563,583,584,564
egen,24,20,469,471
knode,1,166
knode,2,6
k,3,23.875,40.721,-6.0
knode,7,174
knode,8,14
k,14,23.875,-40.721,-6.0
csys,0
real,2
kgen,2,1,3,1,,-8.0,,3
kgen,2,7,8,1,,8.0
kgen,2,10,,,,,-6.0
kgen,2,10,11,,,-20.0
l,2,1,8
l,8,7,8
l,8,10,4
l,5,2,4
```

```
l,8,12,6
l,8,14,3
a,2,1,4,5
a,8,7,9,10
elsize,2,,2
a,3,2,5,6
a,10,11,14,8
a,8,14,13,12
amesh,all
merge,0.001
arrsel,area,3,5,1
lsar
lsusel,line,3,4
lsusel,line,6
nline,1
d,all,all,0.0
arall
lsall
nall
nrsel,z,0.0
nrsel,x,18.4,22.4
d,all,all,0.0
nall
symbc,0,0,0
nrsel,z,105.0
nrsel,y,25.75,26.0
nrsel,x,3.45,3.55
f,all,fy,-4500
nall
wsort,z
iter,1,1
krf,1
afwrit,,1
finish
/exe
/input,27
finish
```

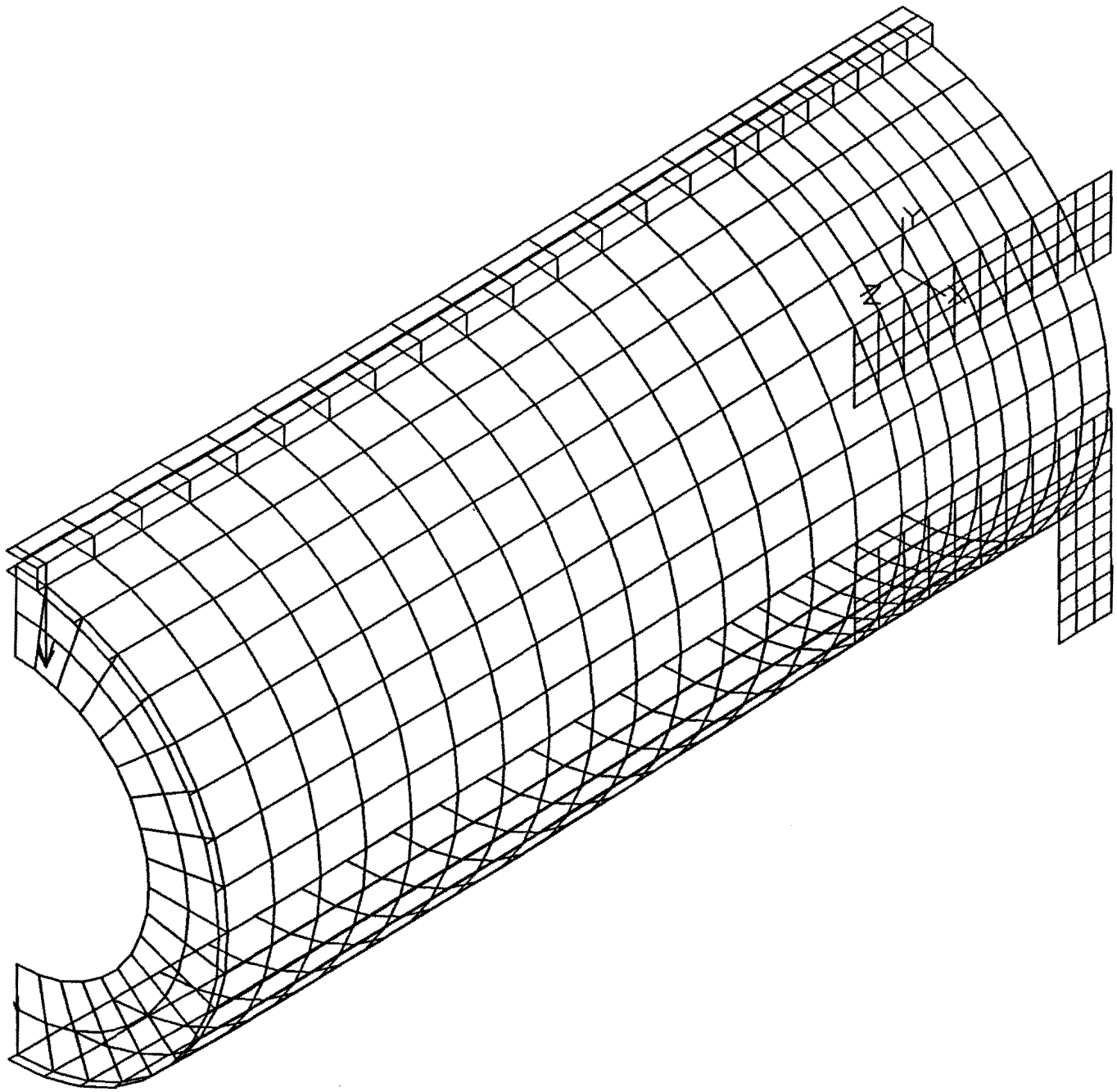

ANSYS 4.3
AUG 17 1988
13:30:12
PLOT NO. 1
PREP7 ELEMENTS
FORC BC

ORIG
XV=1
YV=1
ZV=1
DIST=50.6
XF=7.8
YF=1.35
ZF=48.7

"HEAD CART CYLINDER"

1

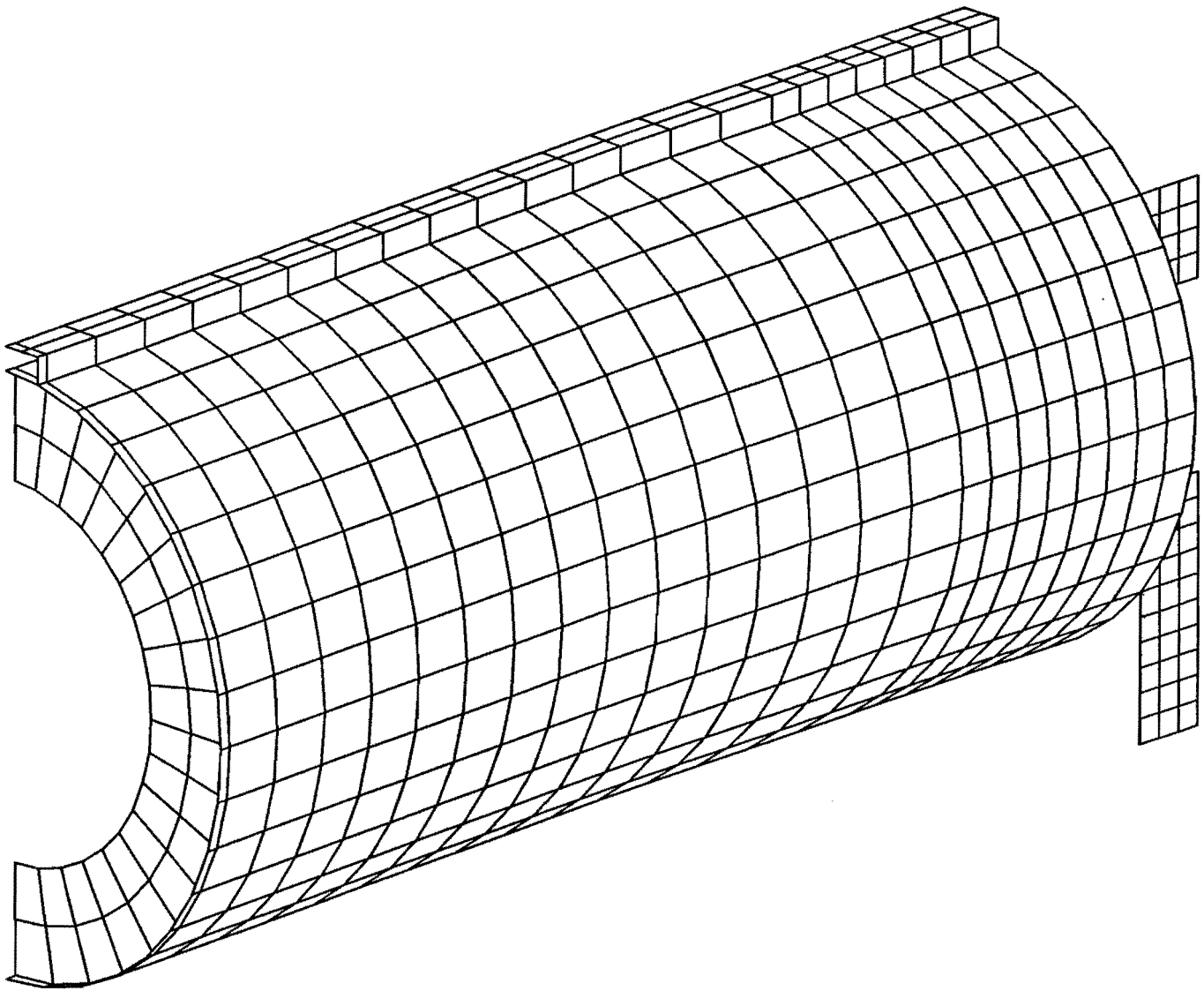

"HEAD CART CYLINDER"

1

ANSYS 4.3
AUG 16 1988
10:06:11
PLOT NO. 1
PREP7 ELEMENTS

ORIG
XV=1
YV=.5
ZV=1
DIST=50.6
XF=9.15
YF=2.2
ZF=50.1
HIDDEN

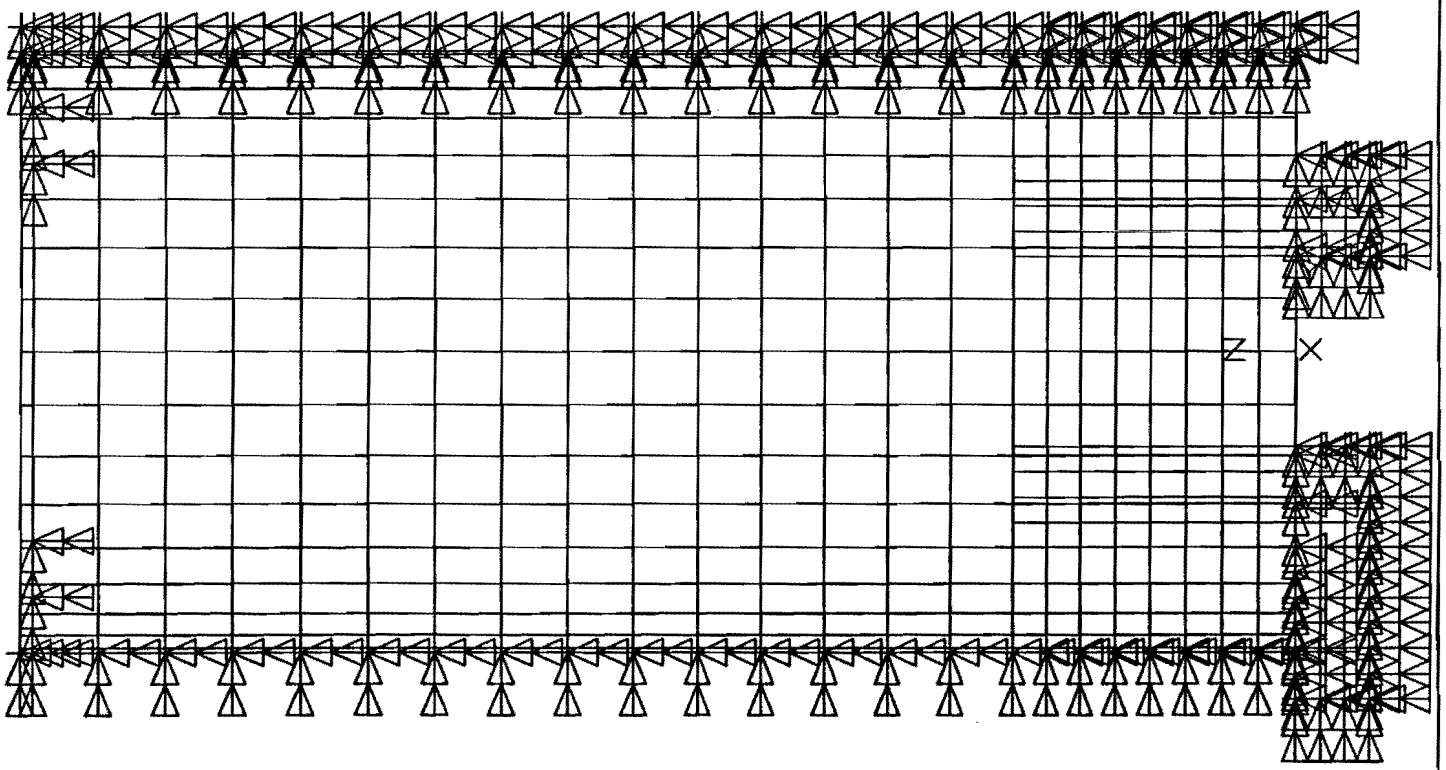

ANSYS 5.3
AUG 22 1988
11:24:35
PLOT NO. 4
PREP7 ELEMENTS
TDIS BC
RDIS BC

ORIG
XV=1
DIST=61.6
XF=11.9
YF=-.879
ZF=50

"HEAD CART CYLINDER"

1

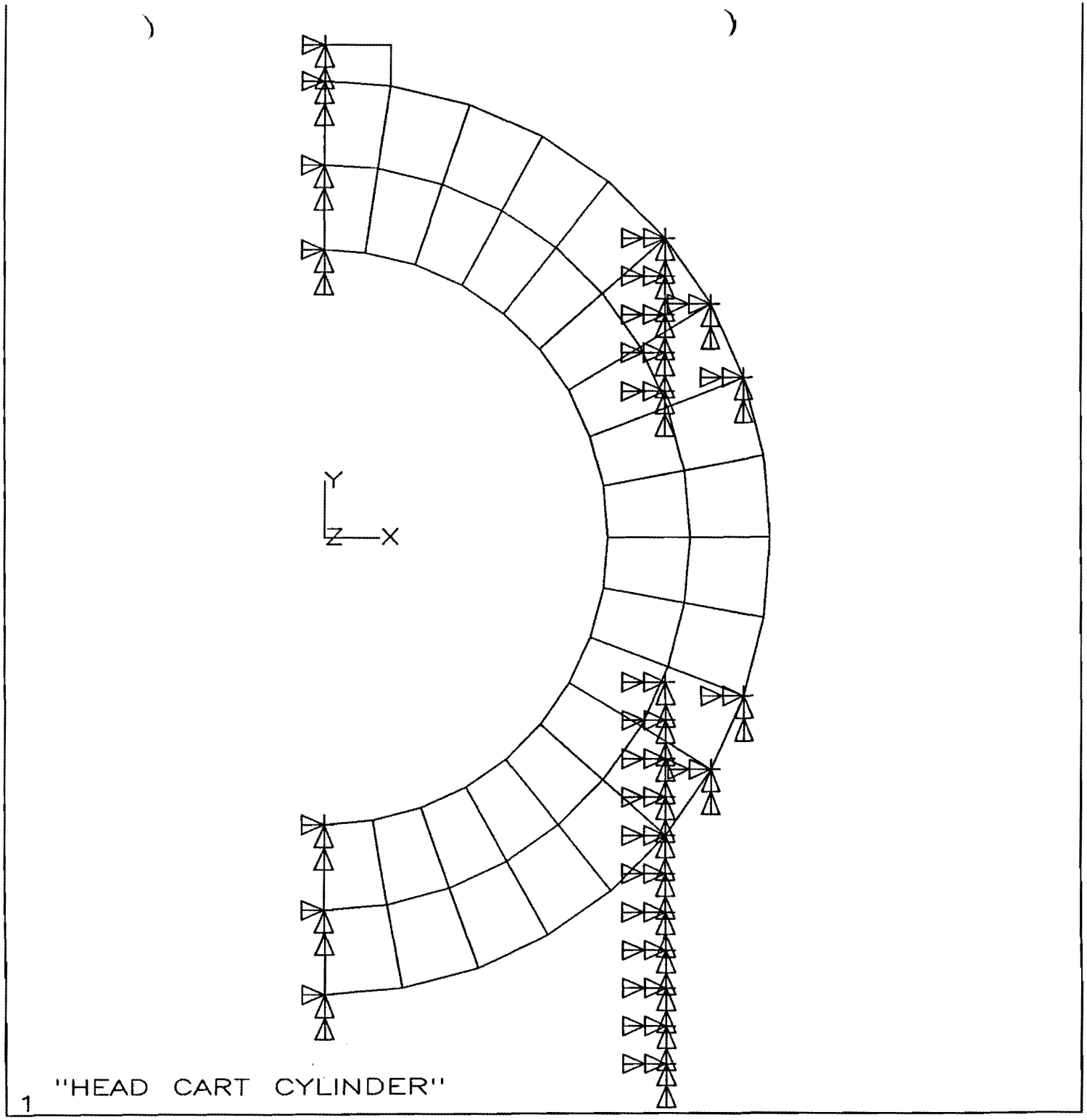

ANSYS 3
AUG 22 1988
11:30:41
PLOT NO. 5
PREP7 ELEMENTS
TDIS BC
RDIS BC

ORIG
ZV=1
DIST=29.4
XF=11.9
YF=-.879
ZF=50

ANSYS 5.3
AUG 23 1988
13:03:33
PLOT NO. 1
POST1 DISPL.
STEP=1
ITER=1

ORIG
XV=1
DIST=61.6
XF=11.9
YF=-.879
ZF=50
DMAX=.0441
DSCA=140

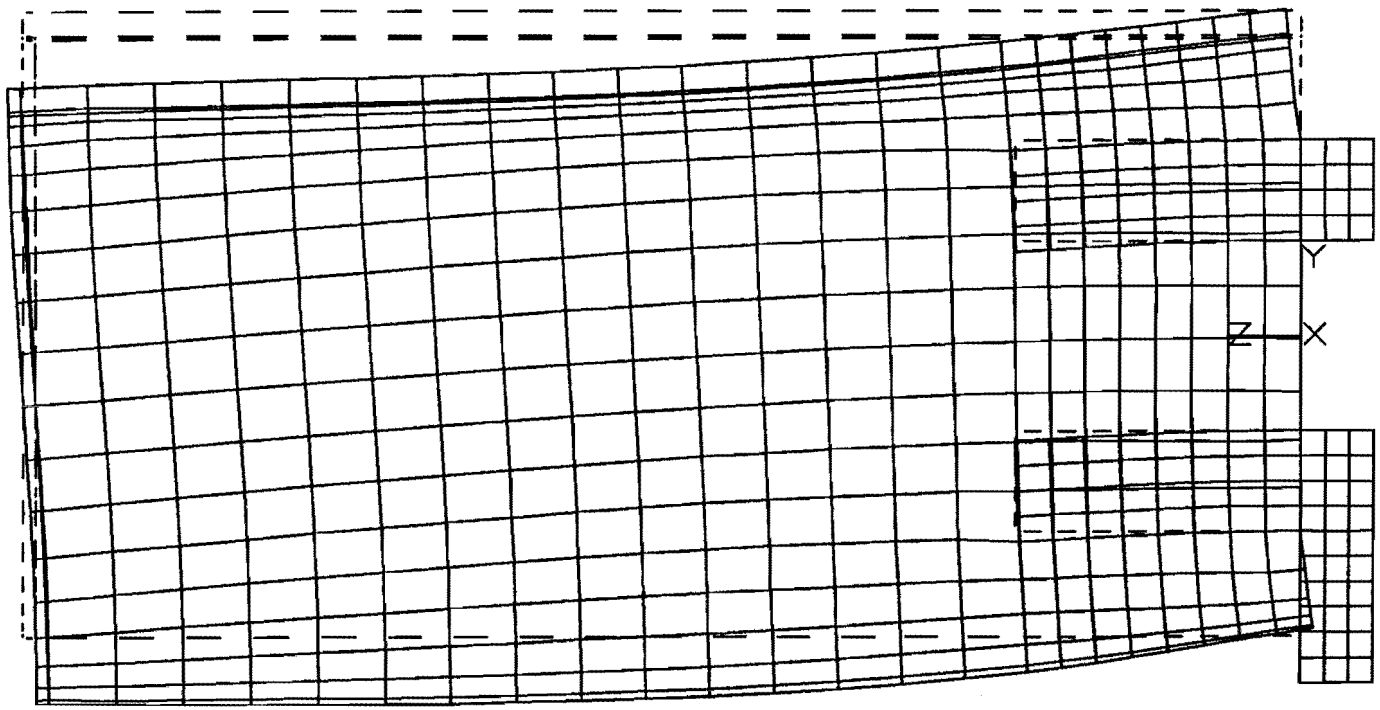

"HEAD CART CYLINDER"

1

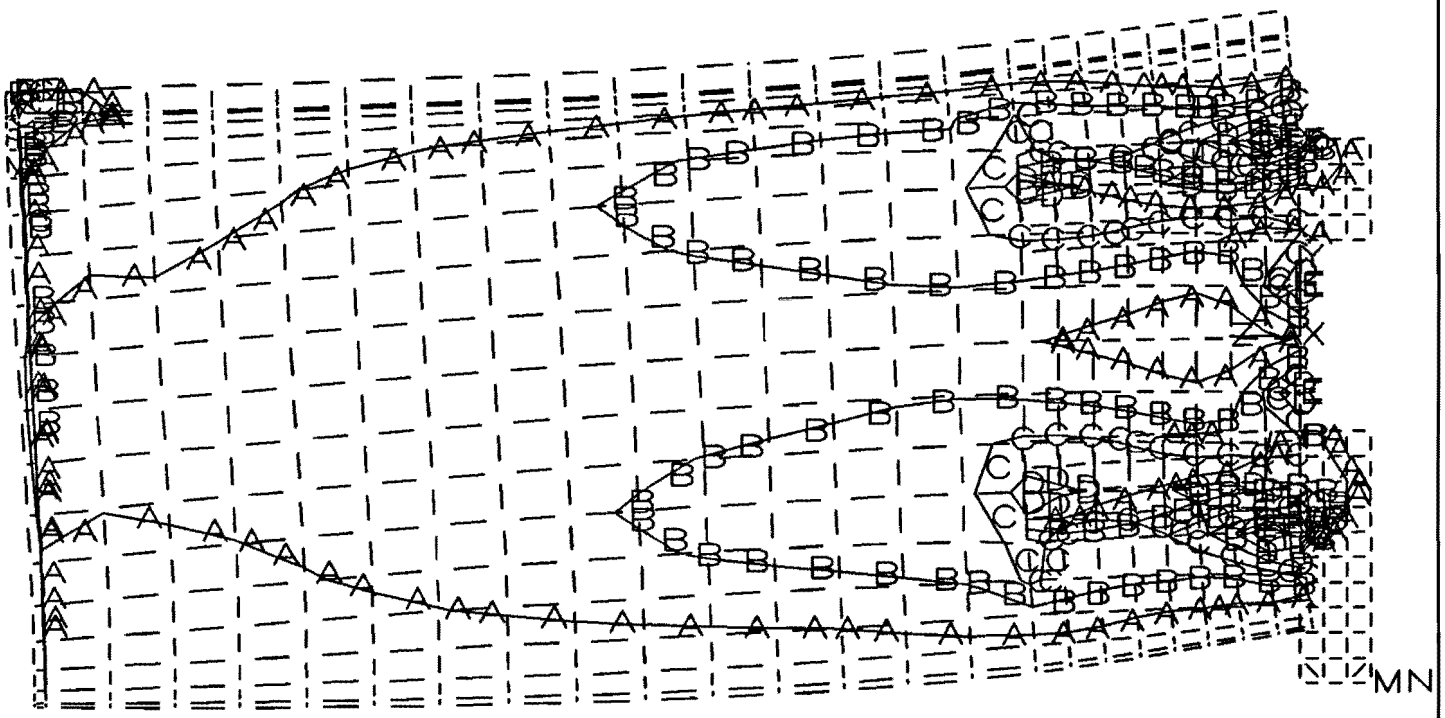

ANSYS 4.3
AUG 23 1988
13:06:05
PLOT NO. 2
POST1 STRESS
STEP=1
ITER=1
SI (AVG)
TOP

ORIG
XV=1
DIST=61.6
XF=11.9
YF=-.879
ZF=50
MX=8036
MN=4.4
A=1150
B=2298
C=3446
D=4594
E=5742
F=6890

"HEAD CART CYLINDER"

1

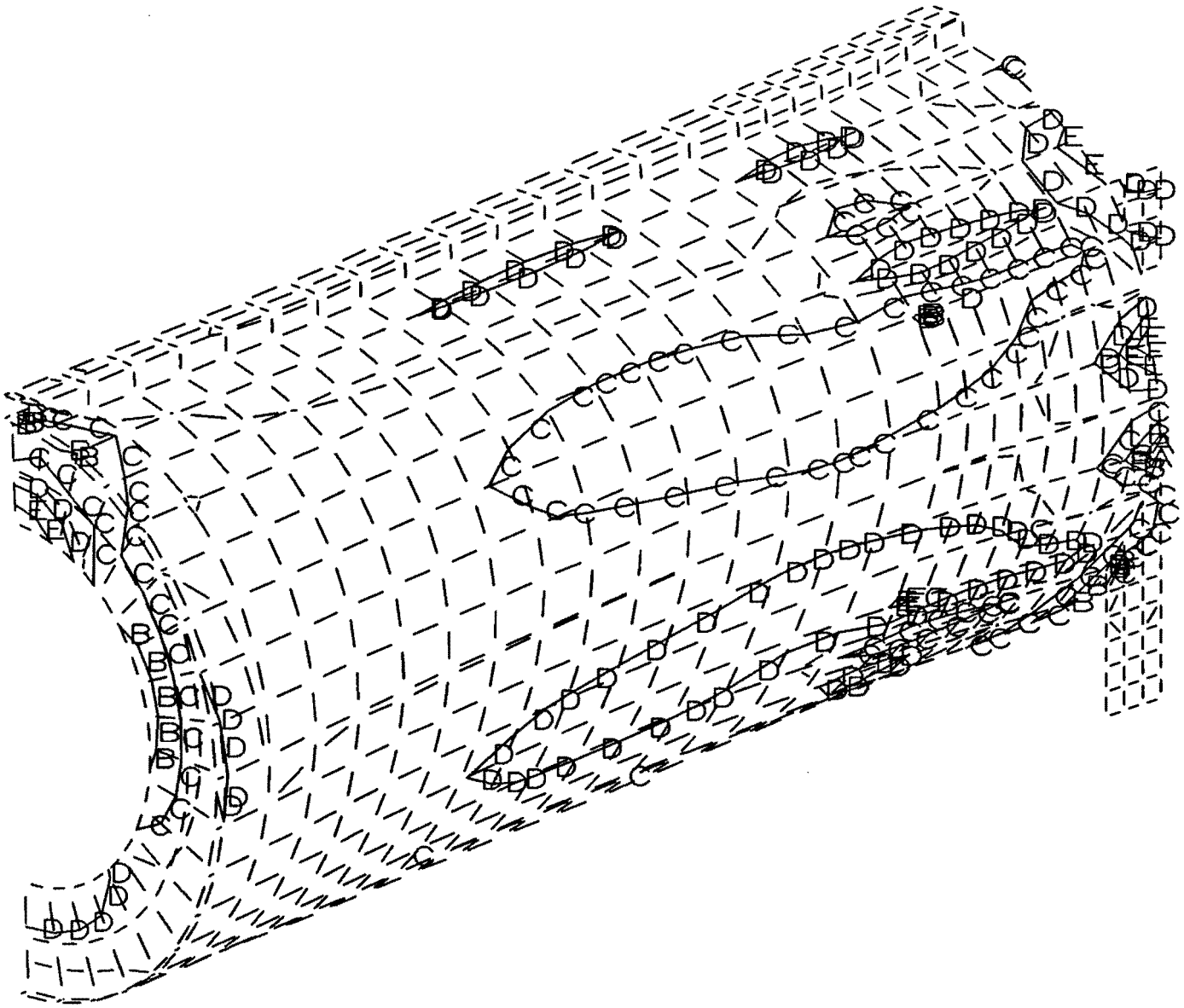

"HEAD CART CYLINDER"

1

ANSYS 4.3
AUG 23 1988
14:02:12
PLOT NO. 5
POST1 STRESS
STEP=1
ITER=1
SX (AVG)
TOP
STRESS ELEM CS

ORIG
XV=1
YV=.5
ZV=1
DIST=50.6
XF=9.15
YF=2.2
ZF=50.1
HIDDEN
MX=5372
MN=-5414
A=-3873
B=-2332
C=-791
D=750
E=2291
F=3832

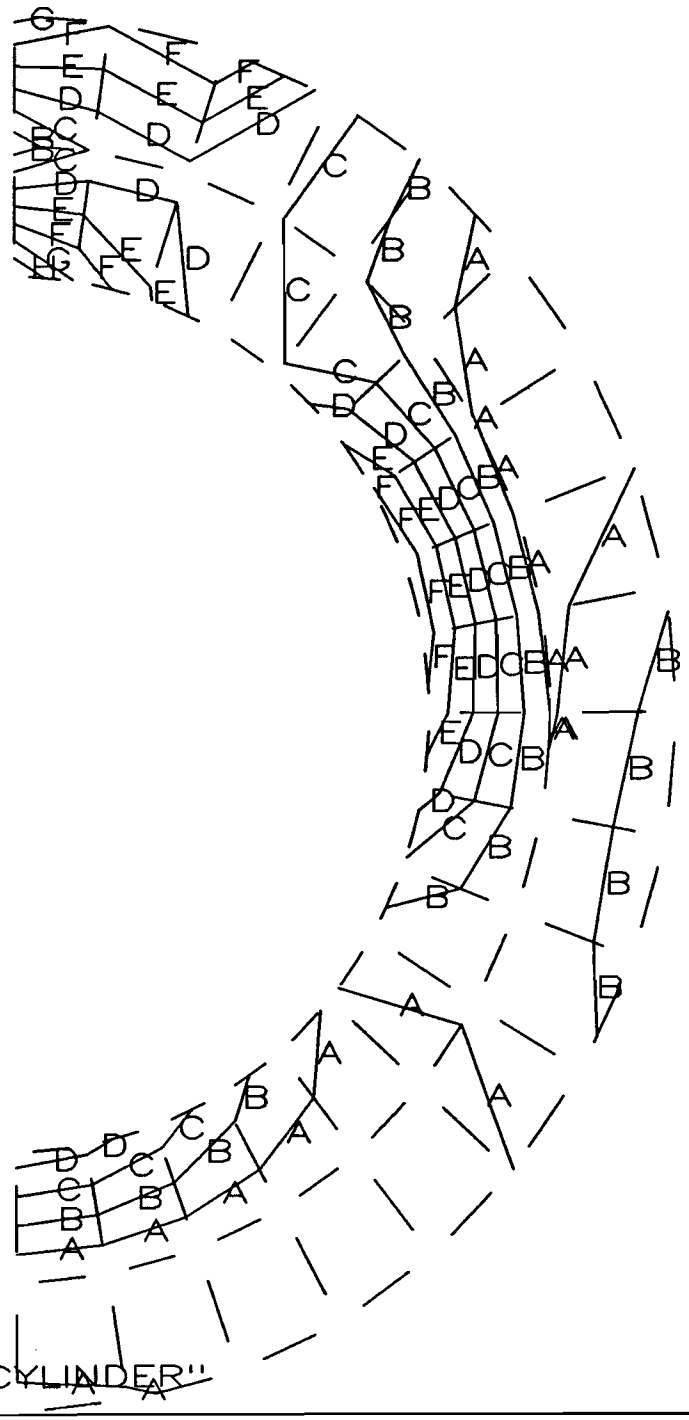

"HEAD CART CYLINDER"

1

ANSYS 4.3
AUG 23 1988
15:10:19
PLOT NO. 1
POST1 STRESS
STEP=1
ITER=1
SI (AVG)
TOP

ORIG
ZV=1
DIST=26.3
XF=11.9
ZF=105
HIDDEN
MX=4091
MN=407
A=814
B=1224
C=1634
D=2044
E=2454
F=2864
G=3274
H=3684

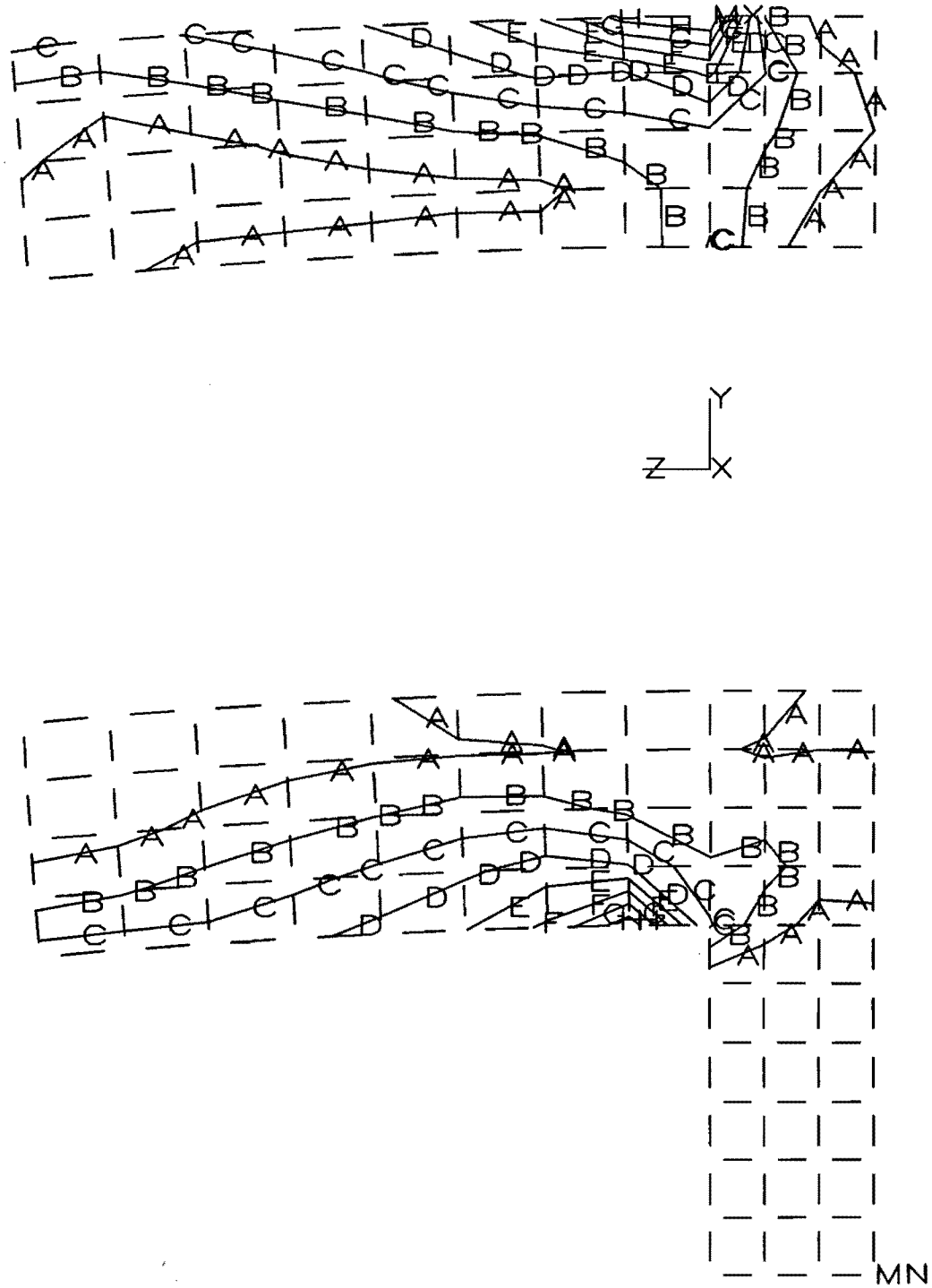

ANSYS 4.3
AUG 23 1988
15:34:53
PLOT NO. 3
POST1 STRESS
STEP=1
ITER=1
SI (AVG)
BOTTOM

ORIG
XV=1
DIST=23.7
XF=18.1
YF=-6
ZF=9
MX=7034
MN=4.5
A=782
B=1564
C=2346
D=3128
E=3910
F=4692
G=5474
H=6256

"HEAD CART CYLINDER"

1

W/O Angle Braces

From: FNAL::MULHOLLAND 11-AUG-1988 16:27
To: JAQUES,MULHOLLAND
Subj: Update

From: FNAL::MULHOLLAND 10-AUG-1988 17:19
To: JAQUES,MULHOLLAND
Subj: Proposed Head Cart Procedure

Head Cart Load Test Procedure.....8/10/88
Updated.....8/11/88

1. Design and fabricate a suitable spreader beam for the Head Cart load.

2. Test the spreader beam to >125% of intended service, i.e.

> 1.25*1.25*9,000# = 14063#

3. Support the Head Cart ONLY at the four corners, and position to put the test load and test position neatly under the building crane.

4. Make a load of > 1.25*9,000 = 11,250# of stackable materials, sling acccording to good practice, include a 25,000# spring scale, and lift to weigh the load.

5. Mark the spreader beam center clearly and carefully, mark the longitudinal point of head load on the Head Cart cylinder so it can be easily seen and check and correct the level of the Cart cylinder, as required.

6. Rope off the area of the test.

7. Provide a means of deflection measurement of the cylinder end. That means should not interfere with the loading, allow accurate (1/16" resolution) determination, and be read without compromising the safety of the reader.

8. Notify any and all interested observers of the impending test not yet contacted.

9. Lift and load the Head Cart by gradual reduction of the crane load on the spring scale. Measure the deflection at approximately,

2,500#.....0.18
5,000#.....0.33
7,000#.....0.50
10,000#.....0.70
and Full load.....0.85
(12,000#)

Plot the deflection as a function of load and cease loading if any significant deviation from linearity is seen or suspected. Begin again as may be required.

Continue loading to Full load and hold for 10 minutes. Lift the load and measure the return toward the initial cylinder position. Repeat the loading cycle to test repeatability. When the Full load deflections are demonstrated to have no hysteresis and the deflections are less than a half inch, the test is complete. Secure the load, take down the ropes, and secure the crane.

---- 30 -----

PLEASE MAKE YOUR COMMENT AND SUGGESTIONS TO AL JAQUES (X3009, 'JAQUES')

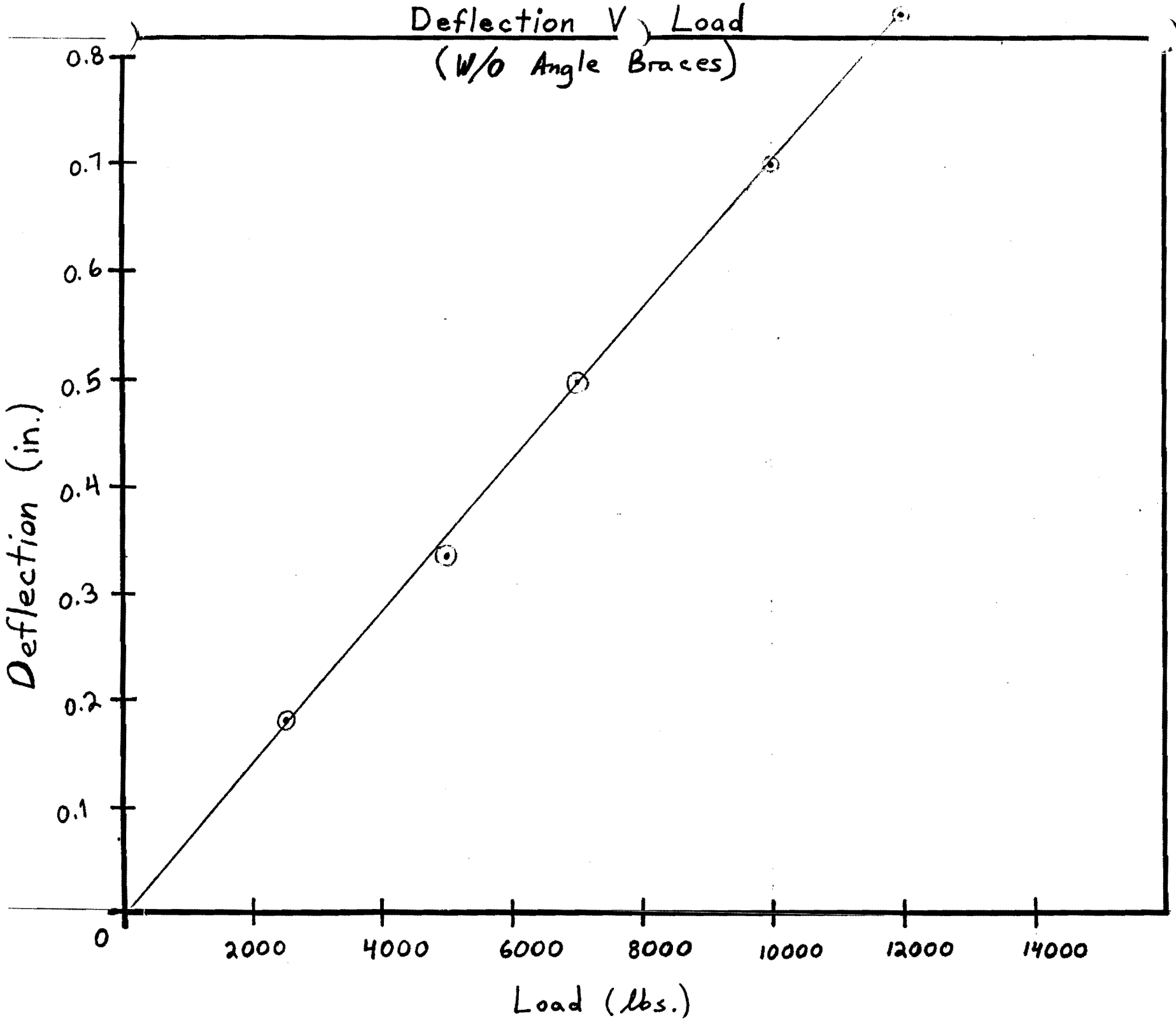
Deflection V. Load
(W/O Angle Braces)
Deflection (in.)
0.8
0.7
0.6
0.5
0.4
0.3
0.2
0.1
0
2000
4000
6000
8000
10000
12000
14000
Load (lbs.)

From: FNAL::MULHOLLAND 11-AUG-1988 16:27
To: JAQUES,MULHOLLAND
Subj: Update

W/Angle Braces

From: FNAL::MULHOLLAND 10-AUG-1988 17:19
To: JAQUES,MULHOLLAND
Subj: Proposed Head Cart Procedure

Head Cart Load Test Procedure.....8/10/88
Updated.....8/11/88

1. Design and fabricate a suitable spreader beam for the Head Cart load.

2. Test the spreader beam to >125% of intended service, i.e.

> 1.25*1.25*9,000# = 14063#

3. Support the Head Cart ONLY at the four corners, and position to put the test load and test position neatly under the building crane.

4. Make a load of > 1.25*9,000 = 11,250# of stackable materials, sling acccording to good practice, include a 25,000# spring scale, and lift to weigh the load.

5. Mark the spreader beam center clearly and carefully, mark the longitudinal point of head load on the Head Cart cylinder so it can be easily seen and check and correct the level of the Cart cylinder, as required.

6. Rope off the area of the test.

7. Provide a means of deflection measurement of the cylinder end. That means should not interfere with the loading, allow accurate (1/16" resolution) determination, and be read without compromising the safety of the reader.

8. Notify any and all interested observers of the impending test not yet contacted.

9. Lift and load the Head Cart by gradual reduction of the crane load on the spring scale. Measure the deflection at approximately,

2,500#.....0.15
5,000#.....0.29
7,500#.....0.42
10,000#.....0.58
and Full load.....0.70
(12,000 #)

Plot the deflection as a function of load and cease loading if any significant deviation from linearity is seen or suspected. Begin again as may be required.

Continue loading to Full load and hold for 10 minutes. Lift the load and measure the return toward the initial cylinder position. Repeat the loading cycle to test repeatability. When the Full load deflections are demonstrated to have no hysteresis and the deflections are less than a half inch, the test is complete. Secure the load, take down the ropes, and secure the crane.

PLEASE MAKE YOUR COMMENT AND SUGGESTIONS TO AL JAQUES (X3009, 'JAQUES')

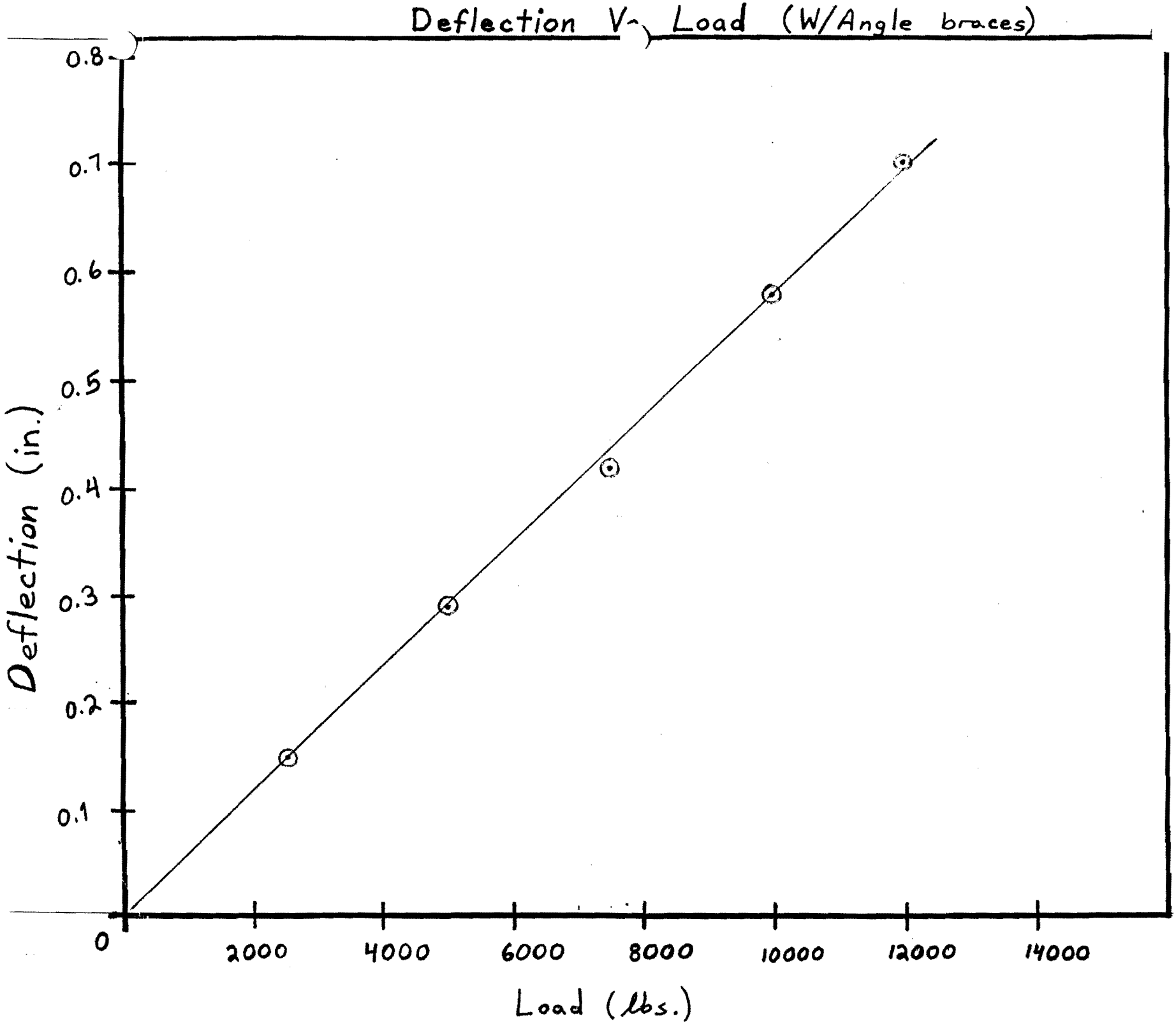
Deflection V. Load (W/Angle braces)
Deflection (in.)
0.8
0.7
0.6
0.5
0.4
0.3
0.2
0.1
0
2000
4000
6000
8000
10000
12000
14000
Load (lbs.)

Center of Gravity

The Head Cart is broken down into two sections (for symmetrical reasons). The central section, consisting of the base, the long diagonal supports and the cylinder assembly has it's CG lying on the vertical line passing through the center of the base. The rear support section has its CG lying in the plane (z = -56) of the dual 7" box beam supports.

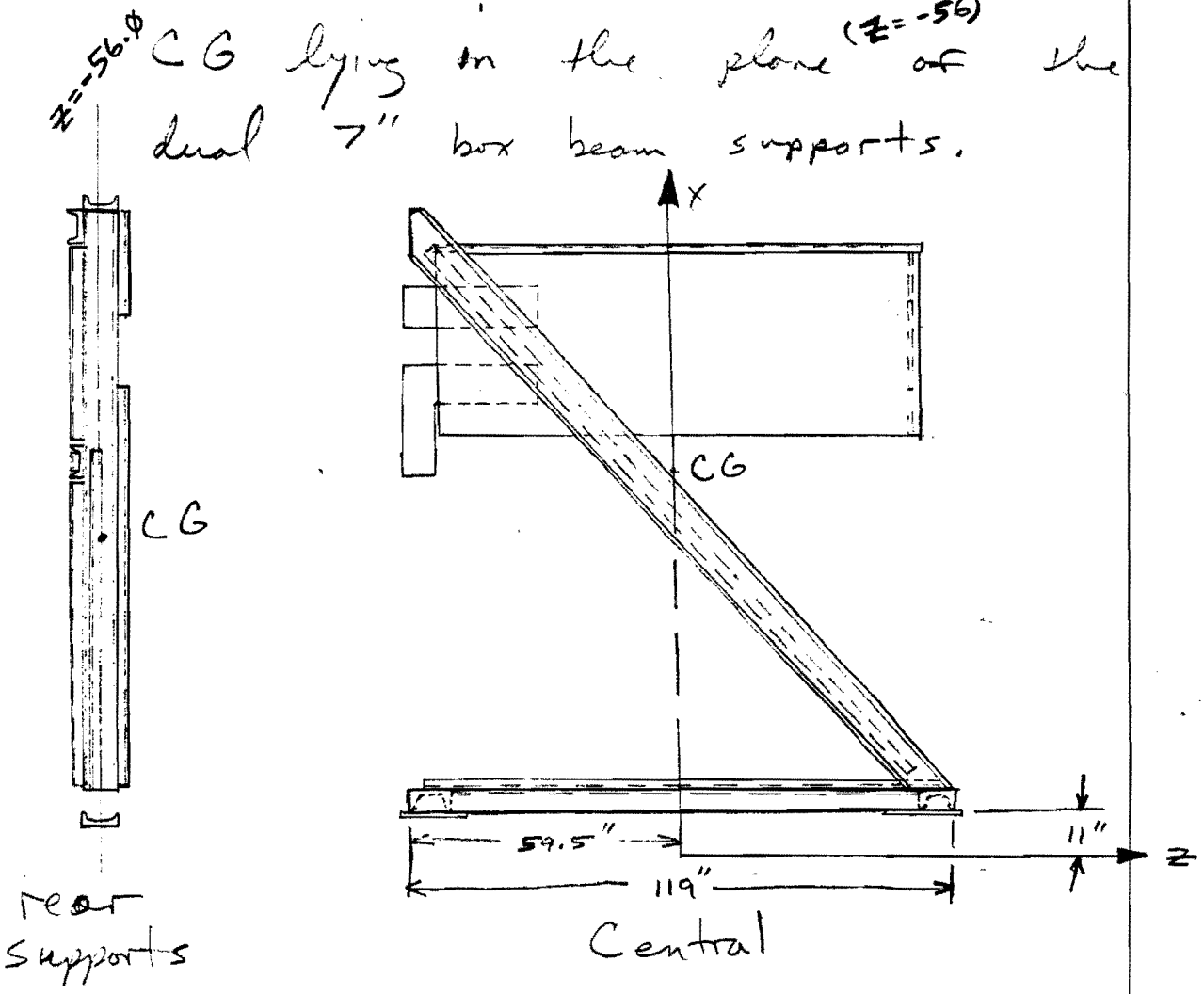

- Central Section

Wheel Mounting Plates -
$\left(0.283 \frac{lbs}{in^3}\right)$

$$V = 15(15)\tfrac{1}{2} = 112.5 \text{ in}^3$$

$$4V(0.283) = \underline{127.4 \text{ lbs}}$$

$$\underline{x = 11''}$$

7" Channel Base -
$\left(12.25 \frac{lbs}{ft}\right)$ $\quad L = \dfrac{2(112) + 2(161)}{12} = 45.5 \text{ ft}$

$$L(12.25) = \underline{557.4 \text{ lbs}}$$

$$\underline{x = 12''}$$

L-angle Braces -
$\left(4.1 \frac{lbs}{ft}\right)$ $\quad L = \dfrac{2(134)}{12} = 22.3 \text{ ft}$

$$\underline{L(4.1) = 91.6 \text{ lbs}}$$

$$\underline{x = 14''}$$

- Central Section (Con't)

7" Channel Diagonal Supports -

$\left(12.25 \frac{lbs}{ft}\right)$ $L = \frac{2(202.6)}{12} = 33.8$ ft

$L(12.25) = \underline{413.7 \text{ lbs}}$

$\underline{x = 93.2''}$

L-angle reinforcements (on above ↑) -

$\left(4.1 \frac{lbs}{ft}\right)$ $L = \frac{2(190)}{12} = 31.7$ ft

$L(4.1) = \underline{129.8 \text{ lbs}}$

$\underline{x = 93.2''}$

Cylinder Assembly -

$\left(0.283 \frac{lb}{in^3} \text{ and } 12.25 \frac{lbs}{ft}\right)$

(cylinder, 4 mounting plates + ring) $V = 48\pi(106)\frac{1}{4} + \pi\left[\left(\frac{47.25}{2}\right)^2 - (15)^2\right]\frac{1}{2}$

$+ 4(8)\frac{1}{2}(30) + 2(12)7\left(\frac{1}{2}\right)$

$= 5083.3 \text{ in}^3$

(7" Channel Reinforcement) $L = 106$ in

$L(12.25) + V(0.283) = \underline{2737.1 \text{ lbs}}$

$\underline{x = 141''}$

- Central Section (Con't)

$$\bar{X}_{cs} = \frac{127.4(11) + 557.4(12) + 91.6(14) + 413.7(93.2) + 129.8(93.2) + 2737.1(141)}{127.4 + 557.4 + 91.6 + 413.7 + 129.8 + 2737.1}$$

$$\frac{445864.3}{4057} = \underline{\underline{109.9''}} \quad (109.9, \emptyset, \emptyset)$$

- Rear Supports Section
(all members are C-channels)

7" Base Reinforcement -
$(12.25 \frac{lbs}{ft})$

$$L = \frac{72}{12} = 6 \text{ ft}$$

$$L(12.25) = \underline{73.5 \text{ lbs}}$$

$$\underline{x = 10''}$$

7" Diagonal Supports -
$(12.25 \frac{lbs}{ft})$

$$L = \frac{2(111.1)}{12} = 18.5 \text{ ft}$$

$$L(12.25) = \underline{226.8 \text{ lbs}}$$

$$\underline{x = 60.7''}$$

– Rear Supports Section (con't)

7" Box Beam cross brace (Lower) –
$\left(12.25 \frac{lbs}{ft}\right)$

$L = \frac{45}{12} = 3.75$

$L(12.25) = \underline{45.9 \text{ lbs}}$

$\underline{x = 111.7''}$

7" Dual Box Beams —
$\left(12.25 \frac{lbs}{ft}\right)$

$L = \frac{4(160)}{12} = 53.3 \text{ ft}$

$L(12.25) = \underline{653.3 \text{ lbs}}$

$\underline{x = 93''}$

7" Box Beam cross Brace (upper – 2) –
$\left(12.25 \frac{lbs}{ft}\right)$

$L_1 = \frac{55}{12} = 4.6 \text{ ft}$

$L_2 = \frac{60}{12} = 5 \text{ ft}$

$L_1(12.25) = \underline{56.1 \text{ lbs}}$

$\underline{x_1 = 174''}$

$L_2(12.25) = \underline{61.25 \text{ lbs}}$

$\underline{x_2 = 170''}$

4" Reinforcing channel –
$\left(5.4 \frac{lbs}{in}\right)$

$$L = \frac{4(152)}{12} = 50.7 \text{ ft.}$$

$$L(5.4) = 273.6 \text{ lbs}$$

$$x = 89''$$

$$\bar{x}_{RSS} = \frac{73.5(10) + 226.8(60.7) + 45.9(111.7) + 653.3(93) + 56.1(174) + 61.25(170) + 273.6(8\cdot}{73.5 + 226.8 + 45.9 + 653.3 + 56.1 + 61.25 + 273.6}$$

$$= \frac{124909.99}{1390.45} = 89.8'' \quad (89.8, 0, -56)$$

$$\bar{x}_{cart} = \frac{1390.45(89.8) + 4057(109.9)}{1390.45 + 4057}$$

$$= \boxed{104.8''}$$

$$\bar{z}_{cart} = \frac{1390.45(-56) + 4057(0.0)}{1390.45 + 4057}$$

$$= \boxed{-14.3''}$$

*in the middle third of height, width + depth →

$$\boxed{C.G_{cart} = (104.8, 0.0, -14.3)}$$

5447 lbs total

Inner Vessel Head -

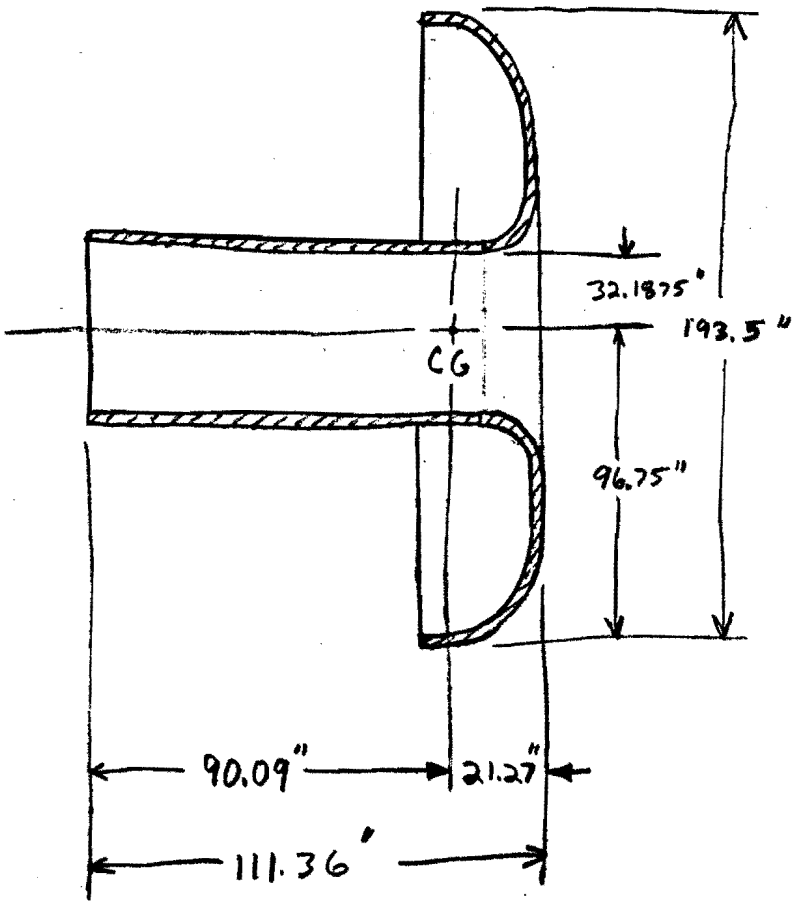

W = 8165 lbs

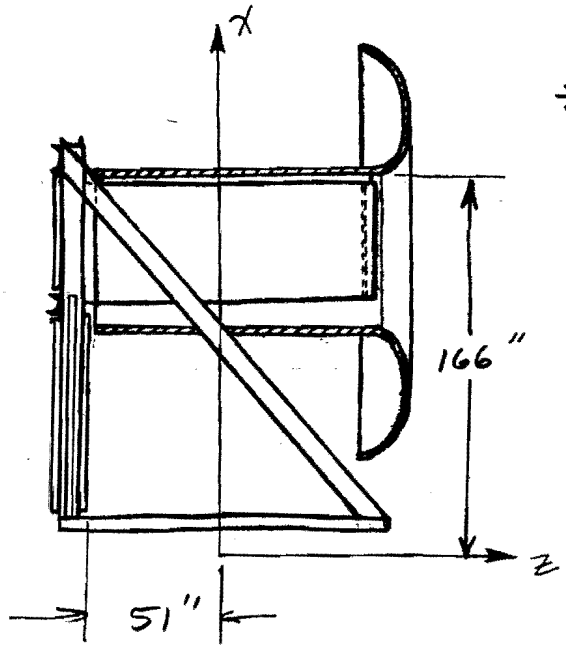

* in Head Cart coordinate System

$$CG_{Head\ Cart} = (\overset{x}{104.8}, \overset{y}{0.0}, \overset{z}{-14.3})$$

$$CG_{Head} = [(166-32.1875), 0.0, (111.36-51-21.27)]$$

$$= (133.8, 0.0, 39.1)$$

$$x_{CG_{Total}} = \frac{104.8\,(5447) + 133.8\,(8165)}{5447 + 8165}$$

$$= 122.2''$$

$$y_{CG_{Total}} = 0.0$$

$$z_{CG_{total}} = \frac{-14.3\,(5447) + 39.1\,(8165)}{5447 + 8165}$$

$$= 17.7''$$

Loaded Head Cart CG = (122.2, 0.0, 17.7)
@ 13,612 lbs

CG is in the middle third of base with respect to y and z. ($y \leq \pm 28''$, $z \leq \pm 19''$).

Maximum Velocity (y-direction)

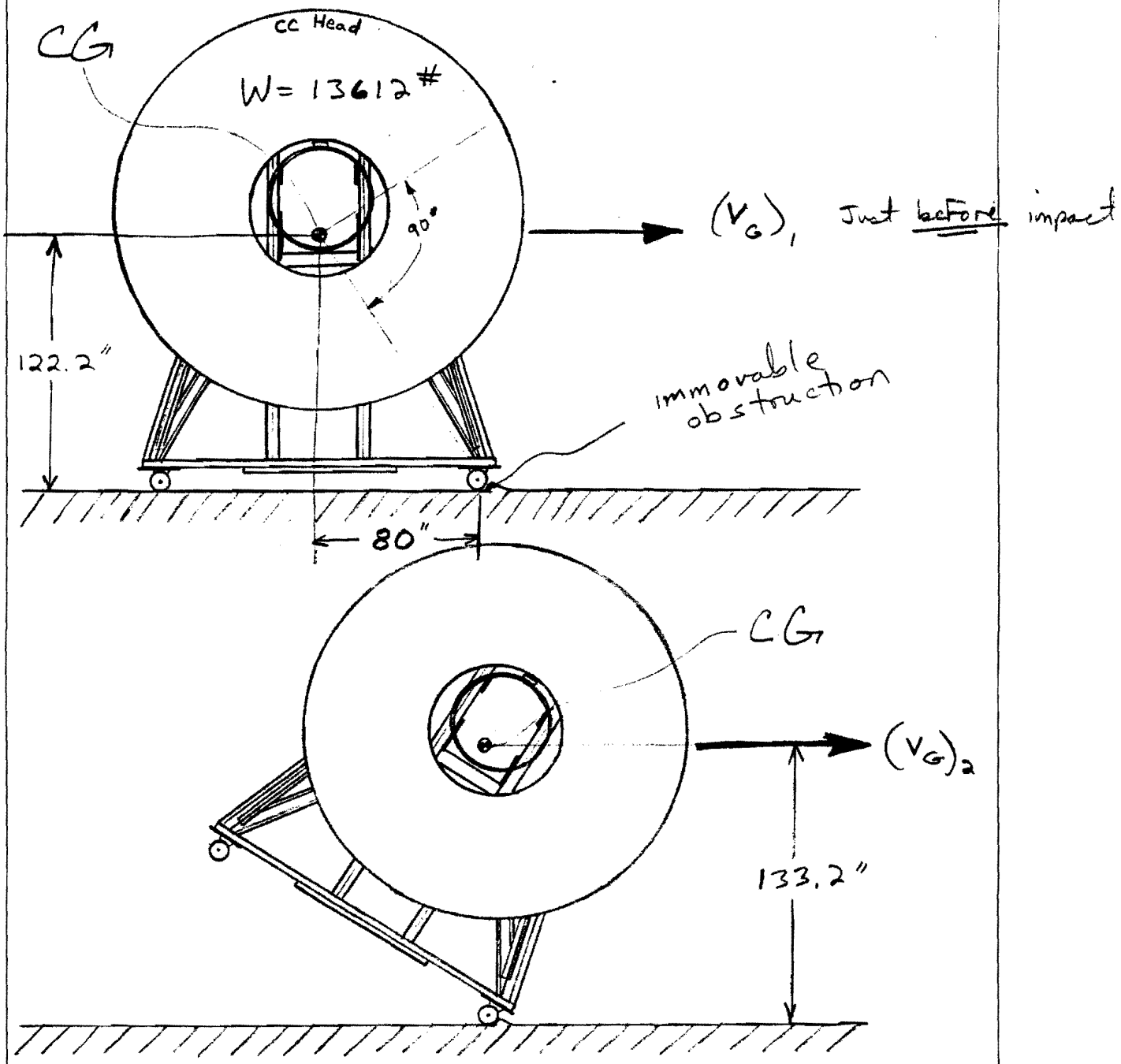

Conservation of Energy

$$KE_1 + PE_1 = KE_2 + PE_2$$

$$\frac{1}{2}\,\frac{13612}{32.174}\,(V_G)_1^2 + 0 = 0 + 13612(133.2 - 122.2)$$

$$\boxed{(V_G)_1 = 26.6\ \frac{ft}{s}}$$

Maximum Velocity (z-direction)

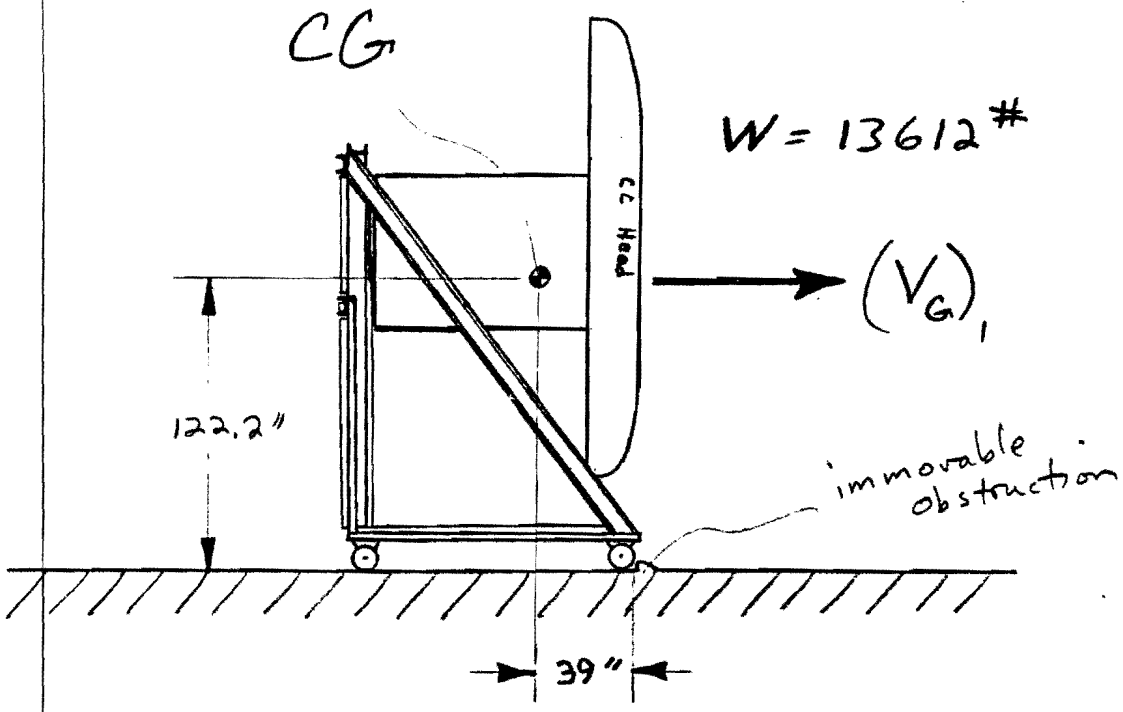

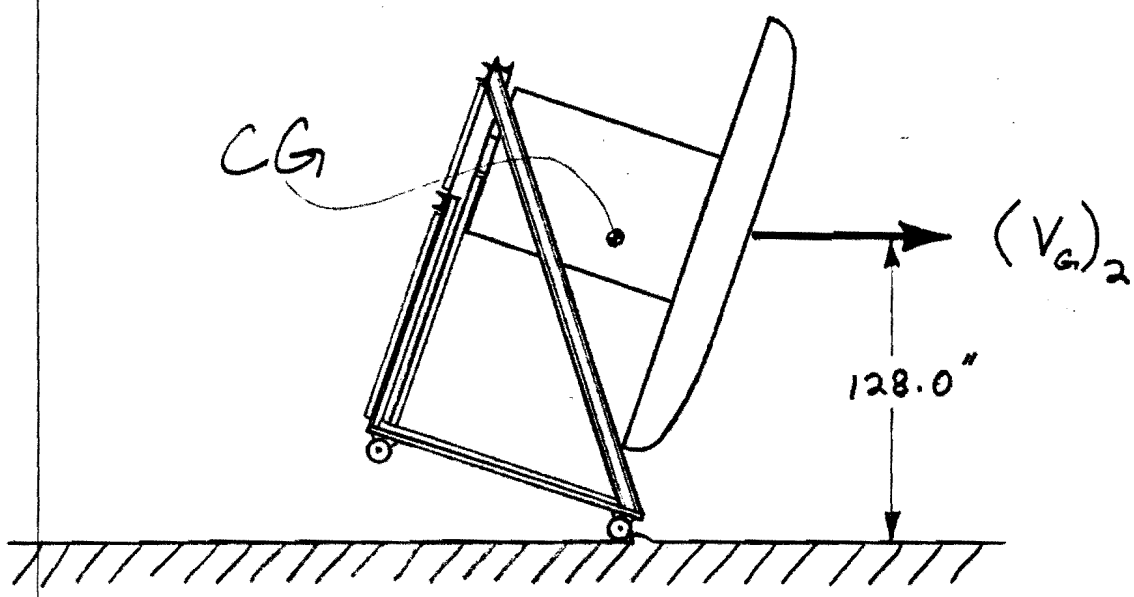

Conservation of Energy

$$KE_1 + PE_1 = KE_2 + PE_2$$

$$\frac{1}{2}\,\frac{13612}{32.174}\,(V_G)_1^2 = 13612\,(128.0 - 122.2)$$

$$\boxed{(V_G)_1 = 19.3\ \frac{ft}{s}}$$

The loaded Head Cart is primarily intended for rolling use in the y-direction. It would be rolled in the z-direction only to align itself with the Clean Room door prior to entry. In entering the Clean Room, the loaded Head Cart would realistically travel at approximately 1 ft/sec. Based on the previous calculations there is little danger of tipping the structure over.

Weight Distribution on Wheels

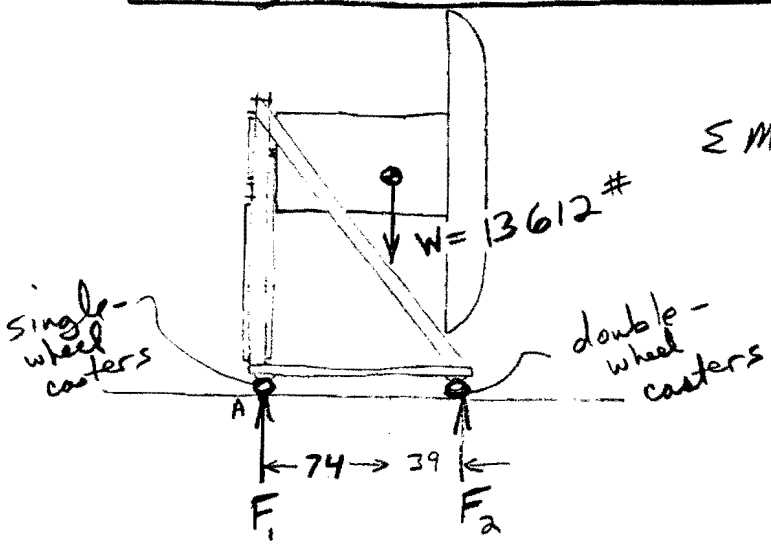

$$\Sigma M_A = \emptyset = -W(74) + F_2(113)$$

$$F_2 = \frac{W(74)}{113}$$

$$= \underline{8914\#}$$

$$F_1 = W - F_2$$

$$= \underline{4698\#}$$

Force Analysis

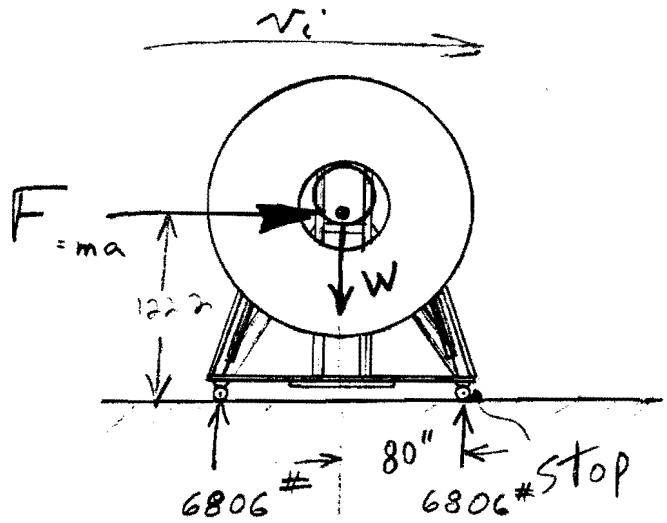

$W = 13612\#$

$g = 32.174 \ \frac{ft}{s^2}$

$$m = \frac{13612}{32.174} = 423 \text{ slugs}$$

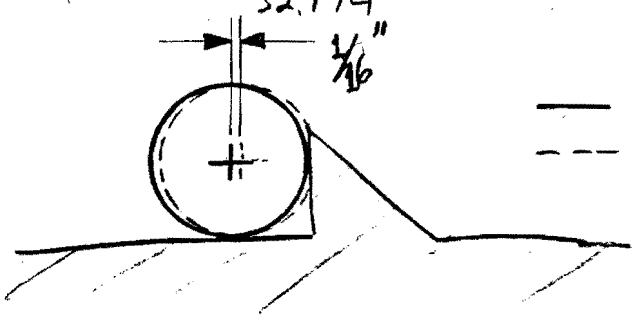

— wheel, just before impact

--- wheel, at it's maximum deformation due to impact with stop.

$$a = \frac{V_f^2 - V_i^2}{2d} = \frac{\emptyset^2 - V_i^2}{2(\frac{1}{16}")(\frac{1'}{12"})}$$

(at impact) $\Sigma M_{stop} = \emptyset = W(80) - F_{cnt}(122.2)$ (Wheels just sta on ground)

$$F_{cnt} = \frac{W(80)}{122.2} = \underline{8911.3 \text{ lbs}}$$

$$F_{cnt} = ma = 423\left(\frac{-V_i^2}{2(\frac{1}{16})(\frac{1}{12})}\right)$$

$$(\text{max.})\ V_i = \sqrt{\frac{8911.3\,(2)(\frac{1}{16})\frac{1}{12}}{423}}$$

$$= .468 \ \frac{ft}{s} = \boxed{5.62 \ \frac{in}{sec}}$$

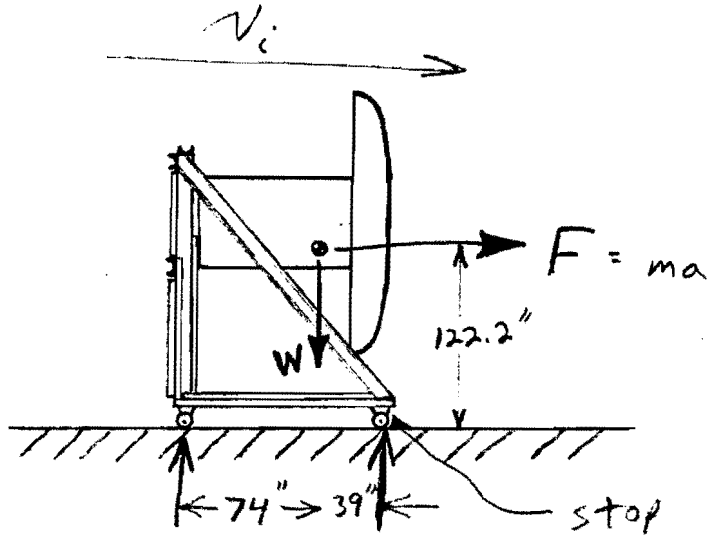

$W = 13612\#$

$g = 32.174 \frac{ft}{s^2}$

$$m = \frac{W}{g} = 423 \text{ slugs}$$

$$a = \frac{\cancel{v_f^2}^{\,0} - v_i^2}{2d} = \frac{-v_i^2}{2\left(\frac{1}{16}\right)\left(\frac{1''}{12''}\right)}$$

(at impact) $\Sigma M_{stop} = 0 = W(39) - F_{cnt.}(122.2)$

so that rear wheel does not leave the ground

$$F_{cnt} = \frac{W(39)}{122.2} = \underline{4344 \text{ lbs}}$$

$$F_{cnt.} = ma = 423\left(\frac{-v_i^2}{2\left(\frac{1}{16}\right)\frac{1}{12}}\right) = 4344$$

$$v_i = \sqrt{\frac{4344(2)\frac{1}{16}\left(\frac{1}{12}\right)}{423}}$$

$$= .327 \frac{ft}{sec} = \boxed{3.92 \frac{in}{sec}}$$

3 ⇒ Member # label

3 ⇒ Joint # label

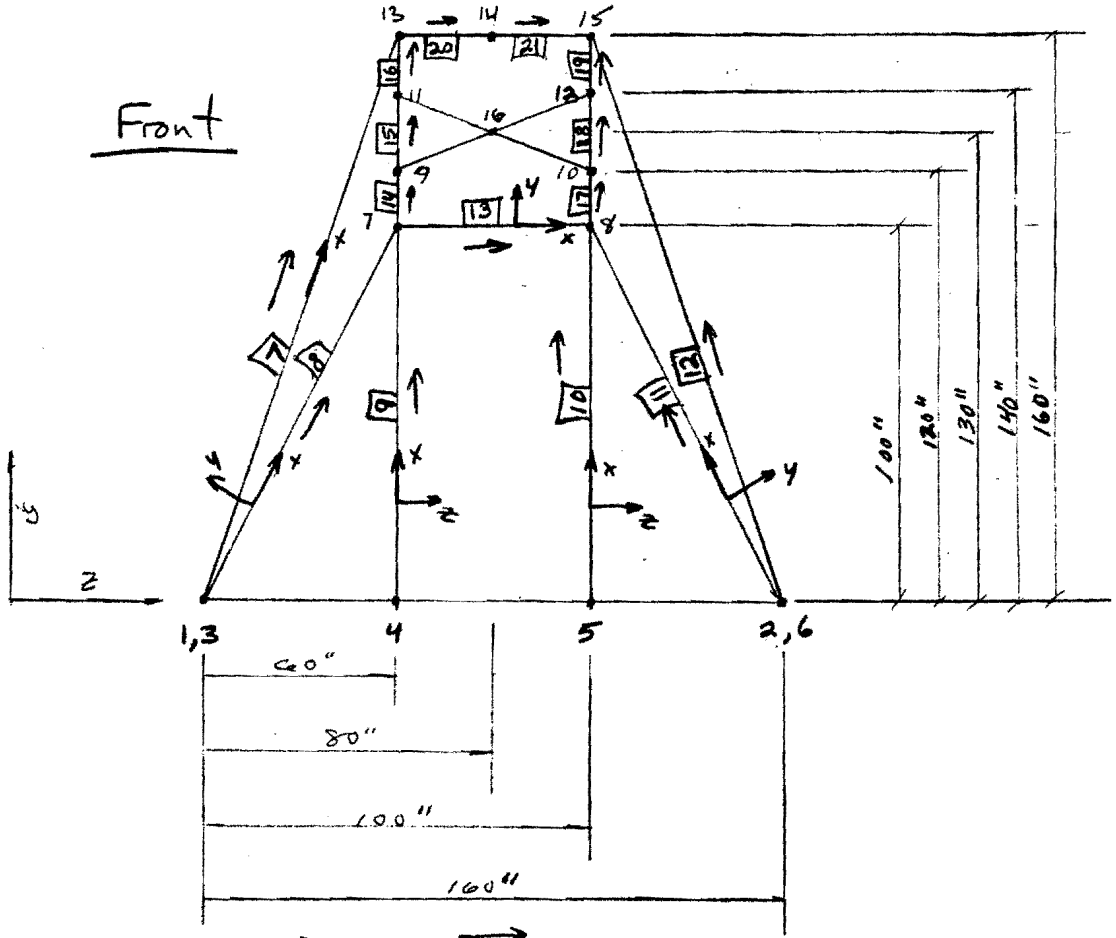

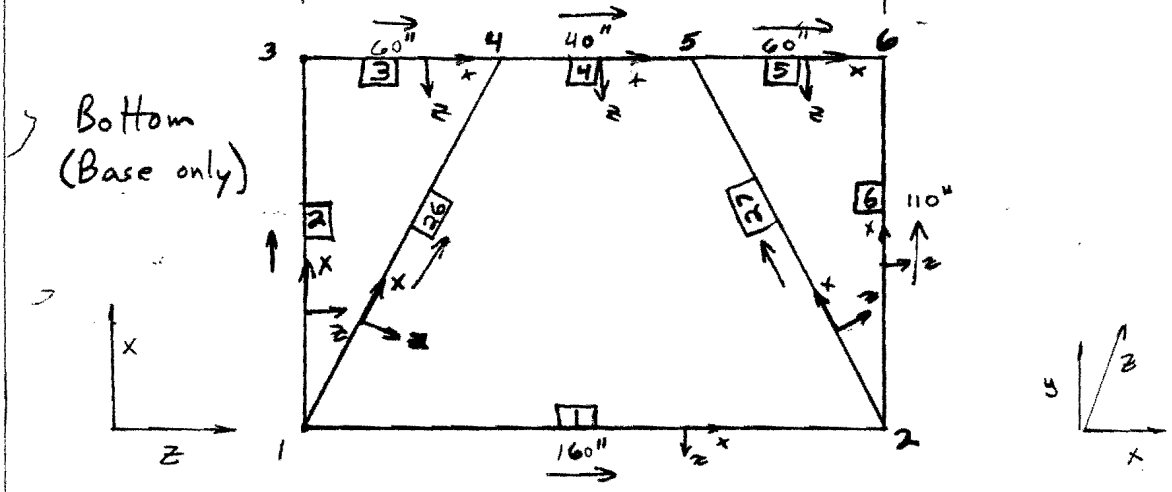

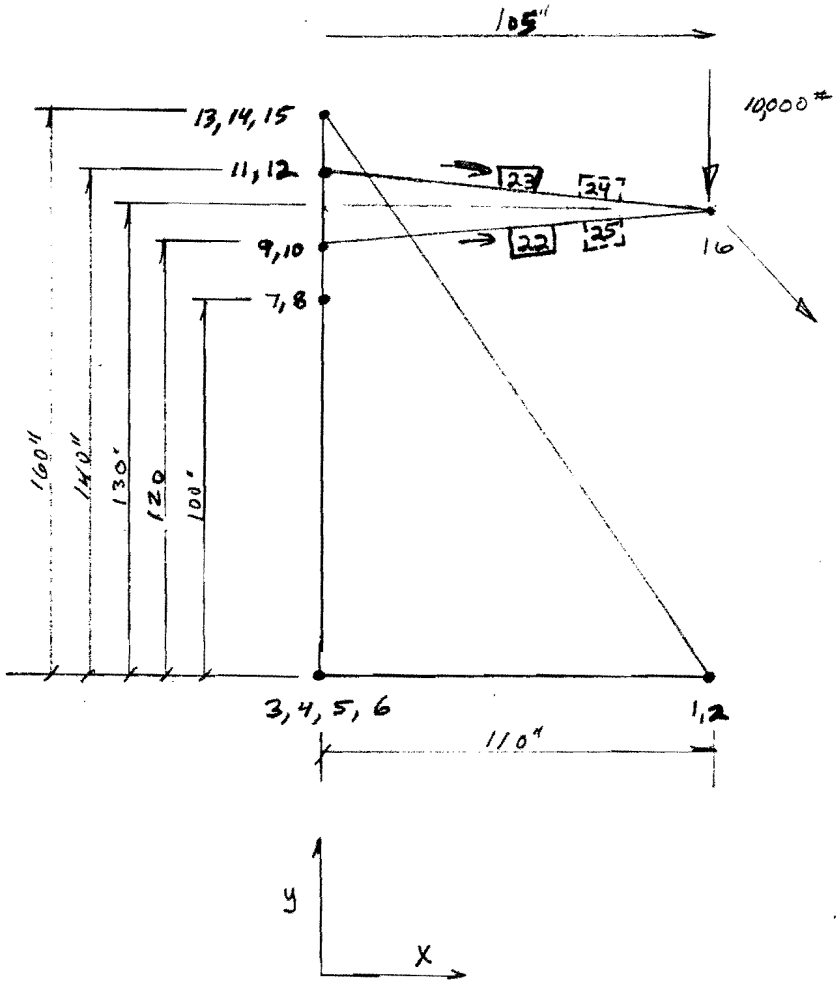
105"
10,000#
13, 14, 15
11, 12
9, 10
7, 8
23
24
22
25
16
160"
140"
130"
120
100"
3, 4, 5, 6
1, 2
110"
y
x

Member Stresses

Member #	Analysis Tensile or Compressive stress	Analysis Bending stress	Hand Calculated stress
1	$\frac{81.33}{3.6} = 22.6$ psi	$\frac{177.14}{0.7} = 253.1$ psi	where stresses are significantly high (ie ≥ 10000 ps
2	$\frac{213.7}{3.6} = 59.4$ psi	$\frac{1832.3}{0.7} = 2615.3$ psi	
3	$\frac{162.5}{3.6} = 45.1$ psi	$\frac{6487.41}{6.91} = 938.3$ psi	
4	$\frac{1710.47}{7.2} = 237.6$ psi	$\frac{6239.77}{13.83} = 451.2$ psi	
5	$\frac{162.41}{3.6} = 45.1$ psi	$\frac{6485.24}{6.91} = 937.9$ psi	
6	$\frac{213.66}{3.6} = 59.4$ psi	$\frac{1832.23}{0.7} = 2615.2$ psi	
7	$\frac{5981.6}{4.79} = 1248.8$ psi	$\frac{38033.34}{7.78} = 4888.3$ psi	
8	$\frac{222.85}{3.6} = 61.9$ psi	$\frac{3326.08}{0.7} = 4747.5$ psi	
9	$\frac{28.73}{10.38} = 2.8$ psi	$\frac{302555.19}{23.05} = 13126.5$ psi	14550 psi (p.4
10	$\frac{28.8}{10.38} = 2.8$ psi	$\frac{302553.41}{23.05} = 13126.0$ psi	14550 psi (p.4
11	$\frac{222.67}{3.6} = 61.9$ psi	$\frac{3325.96}{0.7} = 4747.3$ psi	
12	$\frac{5981.84}{4.79} = 1248.8$ psi	$\frac{38032.88}{7.78} = 4888.3$ psi	
13	$\frac{691.47}{3.6} = 192.1$ psi	$\frac{1149.15}{6.91} = 166.2$ psi	
14	$\frac{165.27}{10.38} = 15.9$ psi	$\frac{367224.25}{23.05} = 15932.2$ psi	14550 psi (p 4)
15	$\frac{4011.13}{10.38} = 386.4$ psi	$\frac{25257.5}{23.05} = 1095.8$ psi	

Member Stresses

Member #	Analysis Tensile or Compressive stress	Analysis Bending stress	Hand Calculated Stress
16	$\frac{4834.8}{10.38} = 465.8$ psi	$\frac{95981.5}{23.05} = 4164.1$ psi	
17	$\frac{164.98}{10.38} = 15.9$ psi	$\frac{367220.75}{23.05} = 15931.5$ psi	14550 psi (p.4)
18	$\frac{4011.45}{10.38} = 386.4$ psi	$\frac{25256.5}{23.05} = 1095.7$ psi	
19	$\frac{4835.09}{10.38} = 465.8$ psi	$\frac{95982.75}{23.05} = 4164.1$ psi	
20	$\frac{2635.58}{7.2} = 366.1$ psi	$\frac{4614.53}{7.23} = 638.2$ psi	
21	$\frac{2635.54}{7.2} = 366.1$ psi	$\frac{4614.12}{7.23} = 638.2$ psi	
22	Done on Ansys		
23	filename		
24	"Head Cart Cylinder		
25			
26	$\frac{3276.43}{1.19} = 2753.3$ psi	$\frac{2047.10}{0.39} = 5183.3$ psi	
27	$\frac{3276.52}{1.19} = 2753.3$ psi	$\frac{2047.09}{0.39} = 5183.3$ psi	

Tensile or compressive stress $= \frac{F}{A}$ (axial force from Analysis)

Bending stress $= \frac{M}{S}$ (Analysis Moment from the most highly stressed axis of the member)

$S = \frac{I}{c}$ (I = moment of inertia in the most highly stressed axis of the Member)

High stress in members $\boxed{14}$ + $\boxed{17}$

$$f_{High} = 15.9 \text{ ksi}$$

Allowable stress $F_a = 0.66 f_y$ $\quad f_y = 36$ ksi

$= 23.76$ ksi

$$\boxed{f_{high} = 15.9 < F_a = 23.76 \text{ ksi}}$$

OK

INPUT DATA FROM FILE NAME 3995.SF

DATE 08-30-1989

FERMILAB
DO HEAD CART

UNITS USED THROUGHOUT ANALYSIS

Moment : In-Lbs
Coordinates : Inch
Member Weight : Lbs./ Ft.
Moment of Inertia : In ^ 4
Cross Sectional Area : Sq.In.
Modulus of Elasticity : Psi

Rotation of Support Joint : Radians
Shear Modulus of Elasticity : Psi
Applied Load or Force Transmitted : Pounds
Torsional Constant of a Cross - Section : In ^ 4
Displacement of Neutral Axis or Support : Inch

JOINT DATA

JOINT #	+, -X COORD Inch	+, -Y COORD Inch	+, -Z COORD Inch
******1	**********+0.0000	**********+0.0000	**********+0.0000
******2	**********+0.0000	**********+0.0000	*********+160.0000
******3	*********+110.0000	**********+0.0000	**********+0.0000
******4	*********+110.0000	**********+0.0000	*********+60.0000
******5	*********+110.0000	**********+0.0000	*********+100.0000
******6	*********+110.0000	**********+0.0000	*********+160.0000
******7	*********+110.0000	*********+100.0000	*********+60.0000
******8	*********+110.0000	*********+100.0000	*********+100.0000
******9	*********+110.0000	*********+120.0000	*********+60.0000
*****10	*********+110.0000	*********+120.0000	*********+100.0000
*****11	*********+110.0000	*********+140.0000	*********+60.0000
*****12	*********+110.0000	*********+140.0000	*********+100.0000
*****13	*********+110.0000	*********+160.0000	*********+60.0000
*****14	*********+110.0000	*********+160.0000	*********+80.0000
*****15	*********+110.0000	*********+160.0000	*********+100.0000
*****16	**********+5.0000	*********+130.0000	*********+80.0000

INPUT DATA FROM FILE NAME 3995.SF

DATE 08-30-1989

FERMILAB
DO HEAD CART

SUPPORT JOINT RESTRAINTS

0 = NO RESTRAINT
1 = FULL RESTRAINT

	TRANSLATION			ROTATION		
JOINT #	JTX	JTY	JTZ	JRX	JRY	JRZ
******1	**1	**1	**0	**0	**0	**0
******2	**0	**1	**1	**0	**0	**0
******3	**0	**1	**0	**0	**0	**0
******4	**0	**0	**0	**0	**0	**0
******5	**0	**0	**0	**0	**0	**0
******6	**0	**1	**0	**0	**0	**0
******7	**0	**0	**0	**0	**0	**0
******8	**0	**0	**0	**0	**0	**0
******9	**0	**0	**0	**0	**0	**0
*****10	**0	**0	**0	**0	**0	**0
*****11	**0	**0	**0	**0	**0	**0
*****12	**0	**0	**0	**0	**0	**0
*****13	**0	**0	**0	**0	**0	**0
*****14	**0	**0	**0	**0	**0	**0
*****15	**0	**0	**0	**0	**0	**0
*****16	**0	**0	**0	**0	**0	**0

MEMBER DATA

MEMBER #	MEMBER FROM	MEMBER TO	CROSS SECTIONAL AREA Sq.In.	MODULUS OF ELASTICITY Psi	SHEAR MODULUS OF ELASTICITY Psi
*****1	*****1	*****2	*******3.6000	****29000000.00	****11200000.00
*****2	*****1	*****3	*******3.6000	****29000000.00	****11200000.00
*****3	*****3	*****4	*******3.6000	****29000000.00	****11200000.00
*****4	*****4	*****5	*******7.2000	****29000000.00	****11200000.00
*****5	*****5	*****6	*******3.6000	****29000000.00	****11200000.00
*****6	*****2	*****6	*******3.6000	****29000000.00	****11200000.00
*****7	*****1	****13	*******4.7900	****29000000.00	****11200000.00
*****8	*****3	*****7	*******3.6000	****29000000.00	****11200000.00
*****9	*****4	*****7	******10.3800	****29000000.00	****11200000.00

INPUT DATA FROM FILE NAME 3995.SF

DATE 08-30-1989

FERMILAB
DO HEAD CART

MEMBER DATA CONTINUED

MEMBER #	MEMBER FROM	MEMBER TO	CROSS SECTIONAL AREA Sq.In.	MODULUS OF ELASTICITY Psi	SHEAR MODULUS OF ELASTICITY Psi
****10	*****5	*****8	******10.3800	****29000000.00	****11200000.00
****11	*****6	*****8	*******3.6000	****29000000.00	****11200000.00
****12	*****2	****15	*******4.7900	****29000000.00	****11200000.00
****13	*****7	*****8	*******3.6000	****29000000.00	****11200000.00
****14	*****7	*****9	******10.3800	****29000000.00	****11200000.00
****15	*****9	****11	******10.3800	****29000000.00	****11200000.00
****16	****11	****13	******10.3800	****29000000.00	****11200000.00
****17	*****8	****10	******10.3800	****29000000.00	****11200000.00
****18	****10	****12	******10.3800	****29000000.00	****11200000.00
****19	****12	****15	******10.3800	****29000000.00	****11200000.00
****20	****13	****14	*******7.2000	****29000000.00	****11200000.00
****21	****14	****15	*******7.2000	****29000000.00	****11200000.00
****22	*****9	****16	******10.5000	****29000000.00	****11200000.00
****23	****11	****16	******10.5000	****29000000.00	****11200000.00
****24	****12	****16	******10.5000	****29000000.00	****11200000.00
****25	****10	****16	******10.5000	****29000000.00	****11200000.00
****26	*****1	*****4	*******1.1900	****29000000.00	****11200000.00
****27	*****2	*****5	*******1.1900	****29000000.00	****11200000.00

MEMBER PROPERTIES

MEMBER #	MOMENT OF INERTIA IY In ^ 4	c_y	MOMENT OF INERTIA IZ In ^ 4	c_z	TORSIONAL CONSTANT J In ^ 4
******1	********24.200	3.5	*********1.170	1.67	*********0.161
******2	********24.200	3.5	*********1.170	1.67	*********0.161
******3	********24.200	3.5	*********1.170	1.67	*********0.161
******4	********48.400	3.5	********22.420	2.2	********43.930
******5	********24.200	3.5	*********1.170	1.67	*********0.161
******6	********24.200	3.5	*********1.170	1.67	*********0.161
******7	*********3.250	2.71	********32.600	4.19	*********0.180
******8	*********1.170	1.67	********24.200	3.5	*********0.161
******9	********30.100	2.2	********117.090	5.25	********62.530
******10	********30.100	[illegible]	********117.090	[illegible]	********62.530

INPUT DATA FROM FILE NAME 3995.SF

DATE 08-30-1989

FERMILAB
DO HEAD CART

MEMBER PROPERTIES CONTINUED

MEMBER #	MOMENT OF INERTIA IY In ^ 4	C_y	MOMENT OF INERTIA IZ In ^ 4	C_z	TORSIONAL CONSTANT J In ^ 4
*****11	********1.170	1.67	********24.200	3.5	*********0.161
*****12	*********3.250	2.71	********32.600	4.19	*********0.180
*****13	*********1.170	1.67	********24.200	3.5	*********0.161
*****14	********30.100	2.2	********117.090	5.08	********62.530
*****15	********30.100	2.2	********117.090	5.08	********62.530
*****16	********30.100	2.2	********117.090	5.08	********62.530
*****17	********30.100	2.2	********117.090	5.08	********62.530
*****18	********30.100	2.2	********117.090	5.08	********62.530
*****19	********30.100	2.2	********117.090	5.08	********62.530
*****20	********39.860	5.51	********39.860	5.51	*********0.186
*****21	********39.860	5.51	********39.860	5.51	*********0.186
*****22	****10,713.000	—	****12,940.000	—	*****5,344.000
*****23	****10,713.000	—	****12,940.000	—	*****5,344.000
*****24	****10,713.000	—	****12,940.000	—	*****5,344.000
*****25	****10,713.000	—	****12,940.000	—	*****5,344.000
*****26	*********0.703	1.78	********0.703	1.78	*********0.023
*****27	*********0.703	1.78	********0.703	1.78	*********0.023

MEMBER DESCRIPTION

MEMBER #	MEM.WT./LENGTH Lbs./ Ft.	MEMBER DESCRIPTION (max. 50 chrs.)
******1	*********12.25	
******2	*********12.25	
******3	*********12.25	
******4	*********24.50	
******5	*********12.25	
******6	*********12.25	
******7	*********16.35	
******8	*********12.25	
******9	*********35.30	
*****10	*********35.30	
*****11	*********12.25	
*****12	*********16.35	

INPUT DATA FROM FILE NAME 3995.SF

DATE 08-30-1989

FERMILAB
DO HEAD CART

MEMBER DESCRIPTION CONTINUED

MEMBER #	MEM.WT./LENGTH Lbs./ Ft.	MEMBER DESCRIPTION (MAX. 50 CHRS.)
*****13	*********12.25	
*****14	*********35.30	
*****15	*********35.30	
*****16	*********35.30	
*****17	*********35.30	
*****18	*********35.30	
*****19	*********35.30	
*****20	*********24.50	
*****21	*********24.50	
*****22	*********34.90	
*****23	*********34.90	
*****24	*********34.90	
*****25	*********34.90	
*****26	**********4.10	
*****27	**********4.10	

JOINT LOADS (CONCENTRATED LOADS)

Global Force Components

JOINT #	+, -WX Pounds	+, -WY Pounds	+, -WZ Pounds
*****16	**********+0.000	*******-10,000.000	**********+0.000

END OF DATA INPUT

STRESS CALCULATION RESULTS FOR FILE NAME 3995.SF

DATE 08-30-1989

FERMILAB
DO HEAD CART

UNITS USED THROUGHOUT ANALYSIS

Moment : In-Lbs
Coordinates : Inch
Member Weight : Lbs./ Ft.
Moment of Inertia : In ^ 4
Cross Sectional Area : Sq.In.
Modulus of Elasticity : Psi

Rotation of Support Joint : Radians
Shear Modulus of Elasticity : Psi
Applied Load or Force Transmitted : Pounds
Torsional Constant of a Cross Section : In ^ 4
Displacement of Neutral Axis or Support : Inch

JOINT DISPLACEMENTS (Translations)

JOINT #	+, -X DISP Inch	+, -Y DISP Inch	+, -Z DISP Inch
******1	*******+0.0000	*******+0.0000	*******-0.0001
******2	*******+0.0310	*******+0.0000	*******+0.0000
******3	*******+0.0002	*******+0.0000	*******-0.0216
******4	*******+0.0252	*******-0.0004	*******-0.0216
******5	*******+0.0330	*******-0.0004	*******-0.0212
******6	*******+0.0312	*******+0.0000	*******-0.0211
******7	*******+0.1765	*******-0.0004	*******-0.0215
******8	*******+0.1843	*******-0.0004	*******-0.0213
******9	*******+0.1284	*******-0.0004	*******-0.0217
*****10	*******+0.1361	*******-0.0004	*******-0.0211
*****11	*******+0.0598	*******-0.0001	*******-0.0214
*****12	*******+0.0676	*******-0.0001	*******-0.0214
*****13	*******-0.0050	*******+0.0002	*******-0.0211
*****14	*******-0.0010	*******-0.0006	*******-0.0214
*****15	*******+0.0027	*******+0.0002	*******-0.0216
*****16	*******+0.0980	*******-0.3656	*******-0.0010

STRESS CALCULATION RESULTS FOR FILE NAME 3995.SF

DATE 08-30-1989

FERMILAB
DO HEAD CART

JOINT DISPLACEMENTS (Rotations)

JOINT #	+, -X Rot. Radians	+, -Y Rot. Radians	+, -Z Rot. Radians
******1	*******+0.00042	*******+0.00013	******-0.00100
******2	******-0.00042	*******+0.00025	******-0.00100
******3	*******+0.00002	*******+0.00041	******-0.00098
******4	*******+0.00000	*******+0.00028	******-0.00298
******5	*******+0.00001	*******+0.00010	******-0.00298
******6	*******+0.00000	*******+0.00000	******-0.00098
******7	*******+0.00000	*******+0.00025	*******+0.00145
******8	*******+0.00003	*******+0.00014	*******+0.00145
******9	*******+0.00008	*******+0.00019	*******+0.00343
*****10	*******+0.00000	*******+0.00020	*******+0.00343
*****11	*******+0.00002	*******+0.00019	*******+0.00346
*****12	*******+0.00000	*******+0.00019	*******+0.00346
*****13	*******+0.00008	*******+0.00021	*******+0.00308
*****14	*******+0.00000	*******+0.00019	*******+0.00308
*****15	*******+0.00000	*******+0.00018	*******+0.00308
*****16	*******+0.00000	*******+0.00019	*******+0.00349

MEMBER END LOADS (Forces)

AT JOINT #'S LABLED * POSITIVE AXIAL FORCE VALUE = TENSION FORCE

MEMBER #	JOINT #	AXIAL FORCE +, - FX Pounds	SHEAR +, -FY Pounds	SHEAR +, -FZ Pounds
1	1	*******-81.33	*********+0.00	*********+0.00
	2*	*******+81.33	*********+0.00	*********+0.00
2	1	******-213.70	*******-33.23	*******-52.64
	3*	******+213.70	*******+33.23	*******+52.64
3	3	******-162.50	********-0.09	******+167.46
	4*	******+162.50	*********+0.09	******-167.46

STRESS CALCULATION RESULTS FOR FILE NAME 3995.SF

DATE 08-30-1989

FERMILAB
DO HEAD CART

MEMBER END LOADS (Forces) Continued

AT JOINT #'S LABLED * POSITIVE AXIAL FORCE VALUE = TENSION FORCE

MEMBER #	JOINT #	AXIAL FORCE +, - FX Pounds	SHEAR +, -FY Pounds	SHEAR +, -FZ Pounds
4	4	*****-1710.47	********-0.04	********-0.03
	5*	*****+1710.47	********+0.04	********+0.03
5	5	******-162.41	********+0.09	******-167.42
	6*	******+162.41	********-0.09	******+167.42
6	2	******-213.66	*******-33.23	*******+52.64
	6*	******+213.66	*******+33.23	*******-52.64
7	1	*****+5981.60	******+203.11	*******+14.74
	13*	*****-5981.60	******-203.11	*******-14.74
8	3	******+222.85	********+5.60	*******+46.24
	7*	******-222.85	********-5.60	*******-46.24
9	4	*******-28.73	*****+3044.14	*******-20.43
	7*	*******+28.73	*****-3044.14	*******+20.43
10	5	*******-28.80	*****+3044.12	*******+20.40
	8*	*******+28.80	*****-3044.12	*******-20.40
11	6	******+222.67	********+5.59	*******-46.24
	8*	******-222.67	********-5.59	*******+46.24
12	2	*****+5981.84	******+203.10	*******-14.74
	15*	*****-5981.84	******-203.10	*******+14.74
13	7	******-691.47	********-0.02	********+0.00
	8*	******+691.47	********+0.02	********+0.00
14	7	******+165.27	*****+3090.44	******+780.89
	9*	******-165.27	*****-3090.44	******-780.89
15	9	*****-4011.13	*****+1943.25	******+795.14
	11*	*****+4011.13	*****-1943.25	******-795.14

STRESS CALCULATION RESULTS FOR FILE NAME 3995.SF

DATE 08-30-1989

FERMILAB
DO HEAD CART

MEMBER END LOADS (Forces) Continued

AT JOINT #'S LABLED * POSITIVE AXIAL FORCE VALUE = TENSION FORCE

MEMBER #	JOINT #	AXIAL FORCE +, - FX Pounds	SHEAR +, -FY Pounds	SHEAR +, -FZ Pounds
16	11	*****-4834.80	*****+3090.25	******+933.19
	13*	*****+4834.80	*****-3090.25	******-933.19
17	8	******+164.98	*****+3090.36	******-780.84
	10*	******-164.98	*****-3090.36	******+780.84
18	10	*****-4011.45	*****+1943.16	******-795.11
	12*	*****+4011.45	*****-1943.16	******+795.11
19	12	*****-4835.09	*****+3090.31	******-933.13
	15*	*****+4835.09	*****-3090.31	******+933.13
20	13	*****+2635.58	********+0.05	********+0.00
	14*	*****-2635.58	********-0.05	********+0.01
21	14	*****+2635.54	********+0.00	********+0.00
	15*	*****-2635.54	********+0.00	********+0.00
22	9	*****+1508.43	*****+4053.63	******+228.65
	16*	*****-1508.43	*****-4053.63	******-228.65
23	11	*****-1224.32	******+712.75	*******-79.02
	16*	*****+1224.32	******-712.75	*******+79.02
24	12	*****-1224.43	******+712.75	*******+79.03
	16*	*****+1224.43	******-712.75	*******-79.03
25	10	*****+1508.29	*****+4053.50	******-228.65
	16*	*****-1508.29	*****-4053.50	******+228.65
26	1	*****-3276.43	*******-28.68	********+0.59
	4*	*****+3276.43	*******+28.68	********-0.59
27	2	*****-3276.52	*******-28.68	********-0.59
	5*	*****+3276.52	*******+28.68	********+0.59

STRESS CALCULATION RESULTS FOR FILE NAME 3995.SF

DATE 08-30-1989

FERMILAB
DO HEAD CART

MEMBER END LOADS (Moments)

MEMBER #	JOINT #	TWISTING MOMENT +, -MX In-Lbs	BENDING MOMENT +, -MY In-Lbs	BENDING MOMENT +, -MZ In-Lbs
1	1	*********+0.00	******-519.00	******-177.09
	2	*********+0.00	******+519.23	******+177.14
2	1	*********+6.52	******+1152.38	******-1832.30
	3	*********-6.52	******+4638.06	******-1822.86
3	3	********+60.10	******-3560.39	********-17.08
	4	********-60.10	******-6487.41	********+11.60
4	4	*********-0.37	******+6239.77	******+181.72
	5	*********+0.37	******-6238.50	******-183.15
5	5	********-60.10	******+6485.24	********-11.55
	6	********+60.10	******+3560.17	********+17.08
6	2	*********-6.52	******-1152.53	******-1832.23
	6	*********+6.52	******-4637.81	******-1822.80
7	1	********-10.69	******-914.61	******+3242.62
	13	********+10.69	******-2081.43	****+38033.34
8	3	********-17.16	******-2066.01	********+10.56
	7	********+17.16	******-3326.08	******+642.19
9	4	*******+260.52	*******+784.56	******+1858.88
	7	*******-260.52	******+1258.14	***+302555.19
10	5	*******-259.58	*******-783.17	******+1858.09
	8	*******+259.58	******-1256.63	***+302553.41
11	6	********+17.17	******+2065.95	********+10.56
	8	********-17.17	******+3325.96	******+641.61

STRESS CALCULATION RESULTS FOR FILE NAME 3995.SF

DATE 08-30-1989

FERMILAB
DO HEAD CART

MEMBER END LOADS (Moments) Continued

MEMBER #	JOINT #	TWISTING MOMENT +, -MX In-Lbs	BENDING MOMENT +, -MY In-Lbs	BENDING MOMENT +, -MZ In-Lbs
12	2	*******+10.69	******+914.52	*****+3242.57
	15	*******-10.69	*****+2081.22	****+38032.88
13	7	********+0.00	*******+87.87	*****+1148.20
	8	********+0.00	*******-87.79	*****-1149.15
14	7	*****+1869.19	*****-3048.53	***-305416.25
	9	*****-1869.19	****-12569.34	***+367224.25
15	9	*******-62.26	****-10621.25	****+13606.25
	11	*******+62.26	*****-5281.59	****+25257.50
16	11	******-477.14	*****-6509.76	****+95981.50
	13	******+477.14	****-12153.96	****-34177.00
17	8	*****-1868.26	*****+3047.39	***-305414.00
	10	*****+1868.26	****+12569.38	***+367220.75
18	10	*******+62.25	****+10620.94	****+13605.25
	12	*******-62.25	*****+5281.32	****+25256.50
19	12	******+476.93	*****+6509.15	****+95982.75
	15	******-476.93	****+12153.42	****-34177.00
20	13	********+0.00	******+797.90	*****-4613.44
	14	********+0.00	******-797.79	****+4614.53
21	14	********+0.00	******+797.85	****-4614.12
	15	********+0.00	******-797.82	*****+4614.10
22	9	****-48088.50	*****+6439.00	***+378448.00
	16	****+48088.50	****-30985.00	****+56728.00
23	11	****-11094.36	******-619.50	***+121304.00
	16	****+11094.36	*****+9102.50	****-44784.00

STRESS CALCULATION RESULTS FOR FILE NAME 3995.SF

DATE 08-30-1989

FERMILAB
DO HEAD CART

MEMBER END LOADS (Moments) Continued

MEMBER #	JOINT #	TWISTING MOMENT +, -MX In-Lbs	BENDING MOMENT +, -MY In-Lbs	BENDING MOMENT +, -MZ In-Lbs
24	12	****+11094.51	******+619.25	***+121304.00
	16	****-11094.51	*****-9104.00	****-44784.00
25	10	****+48088.39	*****-6438.00	***+378448.00
	16	****-48088.39	****+30984.00	****+56720.00
26	1	********+2.72	*******-61.05	*****-1546.13
	4	********-2.72	*******-12.88	*****-2047.10
27	2	********-2.72	*******+61.03	*****-1546.12
	5	********+2.72	*******+12.83	*****-2047.09

MEMBER LENGTH AND WEIGHT

MEMBER #	MEMBER LENGTH Inch	MEMBER WT./ L Lbs./ Ft.	TOTAL MEM. WT.
******1	********160.000	*********12.25	********163.33
******2	********110.000	*********12.25	********112.29
******3	*********60.000	*********12.25	*********61.25
******4	*********40.000	*********24.50	*********81.67
******5	*********60.000	*********12.25	*********61.25
******6	********110.000	*********12.25	********112.29
******7	********203.000	*********16.35	********276.59
******8	********117.000	*********12.25	********119.44
******9	********100.000	*********35.30	********294.17
*****10	********100.000	*********35.30	********294.17
*****11	********117.000	*********12.25	********119.44
*****12	********203.000	*********16.35	********276.59
*****13	*********40.000	*********12.25	*********40.83
*****14	*********20.000	*********35.30	*********58.83
*****15	*********20.000	*********35.30	*********58.83
*****16	*********20.000	*********35.30	*********58.83
*****17	*********20.000	*********35.30	*********58.83
*****18	*********20.000	*********35.30	*********58.83

STRESS CALCULATION RESULTS FOR FILE NAME 3995.SF

DATE 08-30-1989

FERMILAB
DO HEAD CART

MEMBER LENGTH AND WEIGHT CONTINUED

MEMBER #	MEMBER LENGTH Inch	MEMBER WT./ L Lbs./ Ft.	TOTAL MEM. WT.
*****19	*********20.000	*********35.30	*********58.83
*****20	*********20.000	*********24.50	*********40.83
*****21	*********20.000	*********24.50	*********40.83
*****22	********107.000	*********34.90	********311.19
*****23	********107.000	*********34.90	********311.19
*****24	********107.000	*********34.90	********311.19
*****25	********107.000	*********34.90	********311.19
*****26	********125.000	**********4.10	*********42.71
*****27	********125.000	**********4.10	*********42.71
		TOTAL =	********3,778.15

SUPPORT REACTIONS (Forces)

JOINT #	+, -RX Pounds	+, -RY Pounds	+, -RZ Pounds
******1	**********-0.10	*********+4,772.68	**********+0.00
******2	**********+0.00	*********+4,772.88	**********-0.03
******3	**********+0.00	***********+227.11	**********+0.00
******6	**********+0.00	***********+226.95	**********+0.00

SUPPORT REACTIONS (Moments)

JOINT #	+, -MX In-Lbs	+, -MY In-Lbs	+, -MZ In-Lbs

END OF ANALYSIS

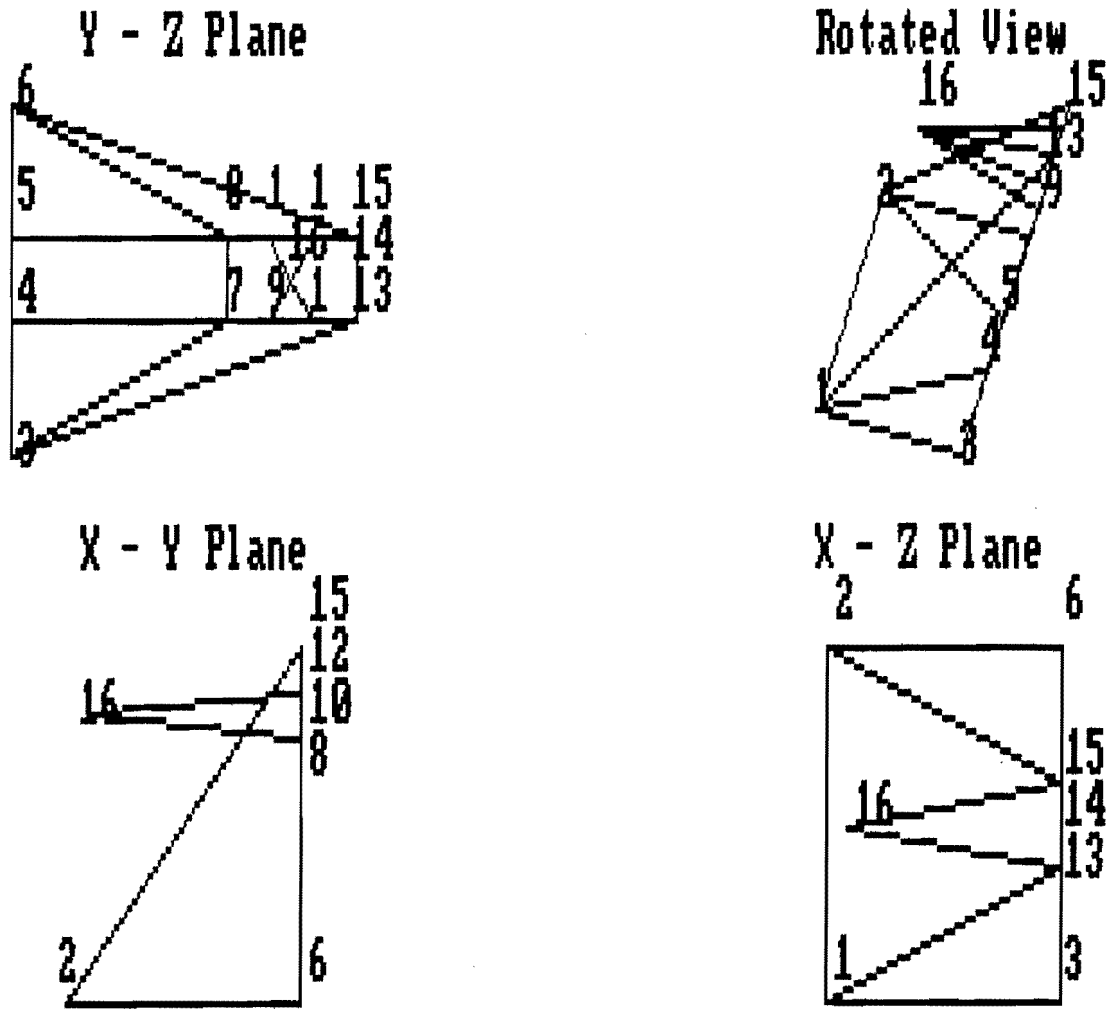

Plot of truss geometry for file name 3995.SF

Rotated View

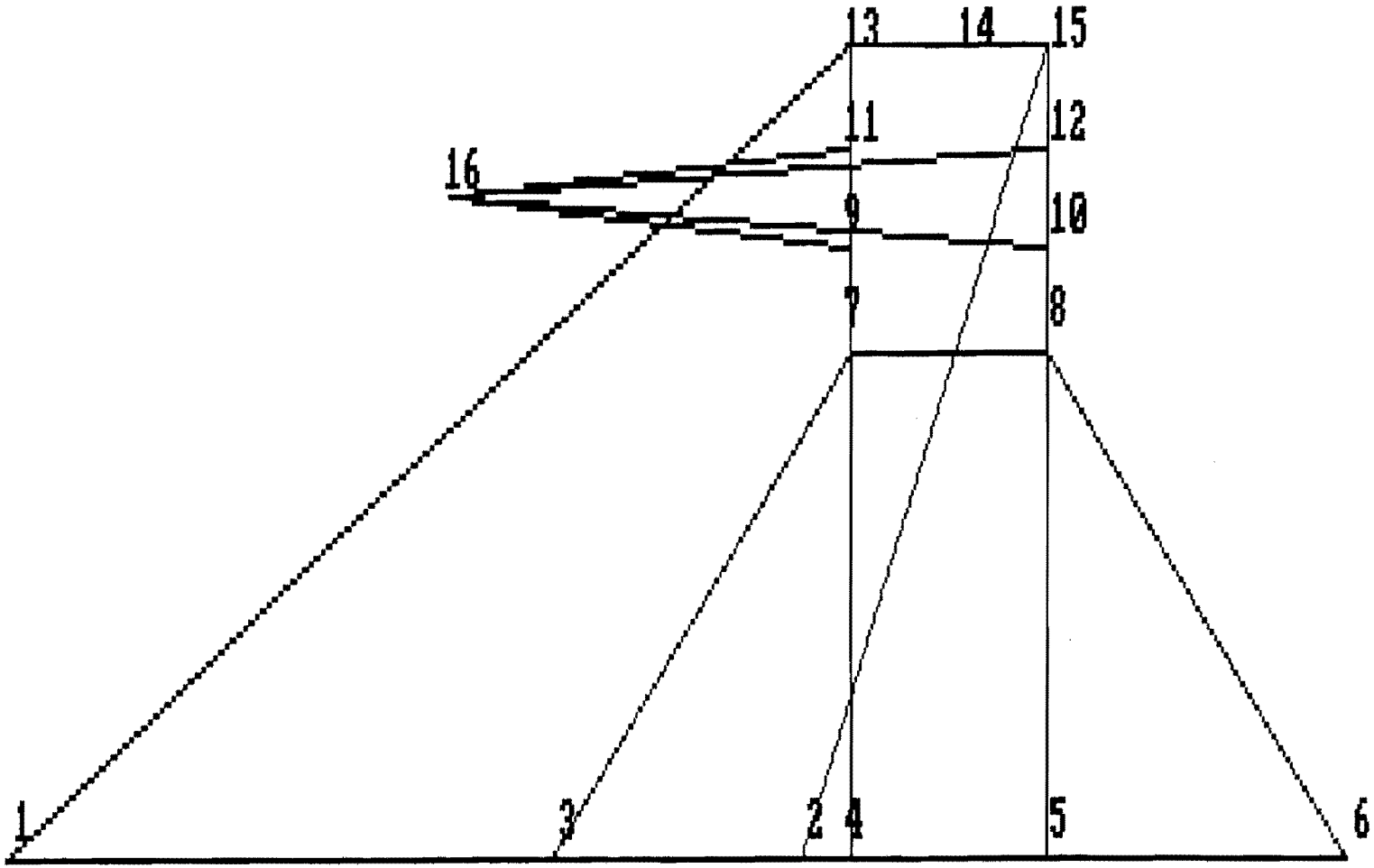

Plot of truss geometry for file name 3995.SF

Rotated View

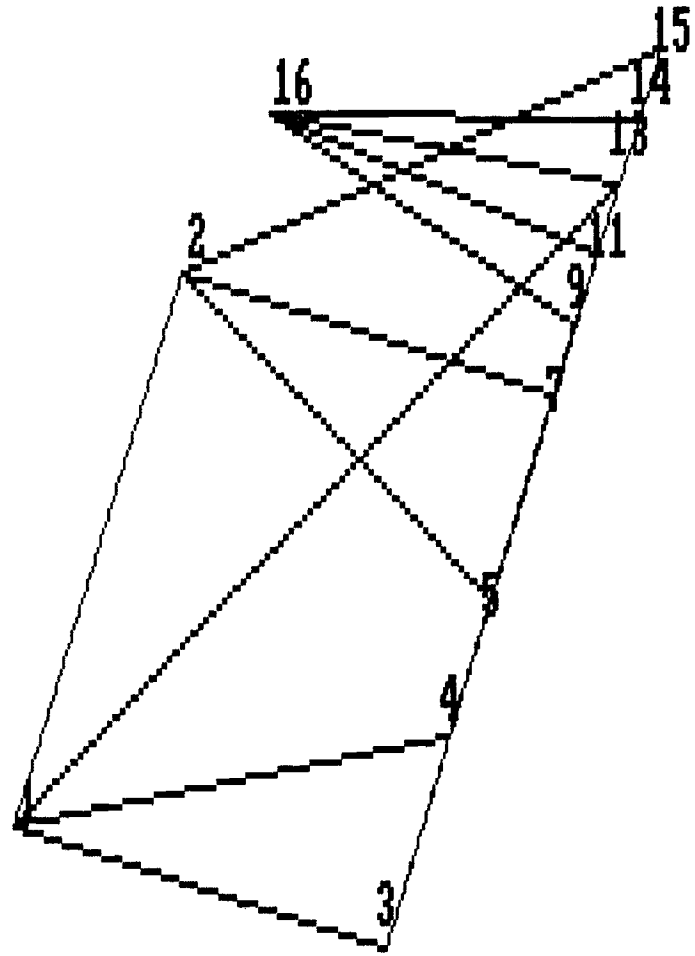

Plot of truss geometry for file name 3995.SF

Head Cart Load Test Procedure

1. Position Head Cart in designated area and attach come-alongs to front, rear and both right and left sides.

2. Anchor the free ends of come-alongs and lock Head Cart wheels in place.

3. Obtain a "B" size concrete shielding block for the load test.

   8165# x 125% = 10206.25#

   (Head wt. = 8165#, "B" block wt. = 10150#)

4. Position slings approximately 12" from the outer end of the barrel, ready to accept load.

5. Load "B" block onto Head Cart barrel and slings using a forklift.

6. Once the barrel is fully bearing the load, stop and inspect the Head Cart visually for any signs of yield or fracture.

7. Lock wheels in lateral direction and move the loaded Head Cart with the come-alongs about 4 or 5 feet.

8. Lock wheels in forward direction and place 1.5" ramps in front of the two front wheels. Move the loaded Head Cart over the two 1.5" ramps using the come-alongs.

* A second sling attached to the "B" block and accessible to the overhead crane will be loosely fitted to the load and crane as a back-up in case of Head Cart failure.

Safety Reviewer [illegible] 6/7/92 Engineer/Tester [illegible]

Safety Witness R. E. Scherr

HEAD CART PROCEDURE

1. Place the cart on the south sidewalk outside the prep room with the tube pointing north. Lock the casters for E-W motion.

2. Clean the cart by wiping with solvent coated rags, paying special attention to the tube.

3. Using the overhead crane position the south head on the tube of the cart. Secure the bottom edge of the head to the rear bottom rail of the cart to prevent swaying of the head on the cart.

4. Position ramps on the floor of the prep room to allow the cart to roll over the tracks on the floor. Attach a chain-fall, come-along, or similar manual towing mechanism to an anchor(s) in the east wall of the prep room. Attach a similar device (to be used for braking) at some point on the sidewalk to the west of the cart.

5. Raise the prep room overhead door and attach the chain-falls to the bottom rails of the cart near the corners.

6. Draw the cart into the prep room in line with the cryostat, disconnect the chain-falls, and close the overhead door.

7. Wipe clean the head and the cart.

8. Rotate the casters on the cart 90 degrees and lock. Place ramps over the tracks on the cleanroom floor.

9. Attach a towing device to the north bottom rail of the cart and a braking device to the south rail.

10. Draw the cart into the cleanroom under the overhead crane.

11. Rig and lift the head off the cart.

12. Return the cart to the south sidewalk for the next head.