D-Zero Engineering Note
September 22,1987
3740.210-EN-113
P. McGivern
K. Weber

CENTRAL CALORIMETER TRANSPORTER CART DESIGN

INTRODUCTION

The purpose of the cryostat transporter cart is to provide a means of rolling the CC cryostat in and out of a building, and to provide a means of support for the cryostat while it is being worked on. The constraints on the cart are:

1. There should be a minimum amount of clearance between the cryostat and the ground, in order to be able to roll the cart and cryostat into a building.
2. The cart must be able to support the weight of the cryostat as well as the weight of approximately 4,000 gallons of liquid nitrogen.
3. The cart must allow access to the underside of the cryostat for work that must be done.

This report will address the design of the transporter cart, as well as any additional equipment needed to accomplish the above mentioned tasks.

TRANSPORTER CART

The transporter cart was designed around an old 50 ton magnet mover. The magnet mover consisted of two wheel assemblies under a 2" plate. The wheel assemblies are sets of rubber wheels (six sets in front and four sets in the rear) inbetween two channels. One wheel assembly pivots for steering.

The wheel assemblies (21 1/2"x80"), as well as the 2" plate covering the assemblies were cut from the magnet mover. Two wide flanges (W12x22) were welded to the front and back sides of both wheel assemblies. A 3" plate, twelve feet long was welded across both wheel assemblies to act as a top plate.

Two pieces of wide flange (W8x24) were welded to both the cross pieces (W12x22) and the 3" plate on the outside of both ends of the wheel assemblies. The inner beam is to serve as a place to jack on, and jackstands will be placed under the outer beams.

After the cryostat is rolled into position and jacked to an appropriate height, the transporter cart must not be moveable. To accomplish this, the two beams (W8x18) which tie the two wheel assemblies together with four 5/8" bolts at each end will be removed.

A locking bolt on the pivoting wheel assembly assures that the transporter cart can be locked into position when rolling in a straight line is desired, and unlocked for steering. A 1/2" plate with a hole was welded to the rear wheel assembly, in the center of the 3" plate, to allow for pulling the transporter cart in the other direction.

A coefficient of friction was experimentally determined for the empty cart, then used to calculate the frictional resistance load for the loaded cart. This gives a low end value. For a high end value, the highest coefficient of friction from a table of rolling friction (Marks handbook, Table 2, page 3-40) was applied to the full load. The frictional resistance load for level ground is 1500-3000 Lb.

Calculations are at the end of this report. The transporter cart assembly drawing is 3740.214-MD-224606.

TRANSPORTER CART STANDOFF ASSEMBLIES

In order for the bottom of the cryostat to clear the ground while being rolled into the building, as well as providing a means of fixing the cryostat to the transporter cart, standoff assemblies will be used. The standoff assembly consists of a piece of 8" 40S pipe welded to a 1/2" plate. On the end of the 8" pipe a ring is welded which fits into the counterbore on the foot of the cryostat. To the underside of the 1/2" plate, 1/4" thick rubber has been glued, in order to provide self leveling of the cryostat on the transporter cart. To insure the stability of the cryostat, a piece of 2"x2" angle is placed on each side of the standoff plate and welded to the transporter plate after the cryostat is placed on the standoffs. The cryostat is also tack welded to the standoff ring. See figure 1.

The standoff assembly drawing is 3740.214-MC-224638.

LOAD CONDITIONS

4,000 Gallons N_2 = 27,000 Lb
CC Cryostat = 50,000 Lb
77,000 Lb

Load @ each foot = 20,000 Lb

TRUCK ASSEMBLY (3" PLATE OVER 2 W12x22)

Worst case condition = point loads

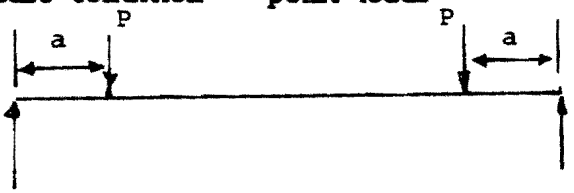

M = Pa P=20,000 Lb. a=34 in.

M = 20,000 * 34 = 680,000 in-lb.

Maximum allowable bending stress = 21,600 psi.

Minimum section modulus = 680,000/21,600 = 31.48 in^3.

Section modulus of 3" plate (3X34) = 51 in^3.

Section modulus of W12x22 = 25.4 in^3.

PIVOT PLATE

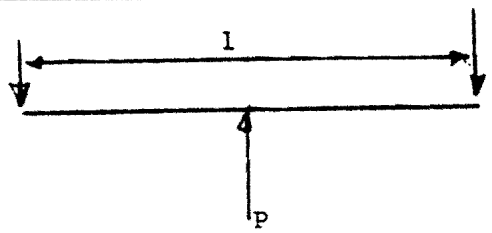

M = Pl/4 P=40,000 Lb. l=55 in.

M = (40,000 * 55)/4 = 550,000 in-lb.

Maximum allowable bending stress = 21,600 psi

Minimum section modulus = 550,000/21,600 = 25.46 in^3.

Section modulus of plate (2.75" x 21.5") = 27 in^3.

CROSS MEMBER (W8X24)

Worst case = point load

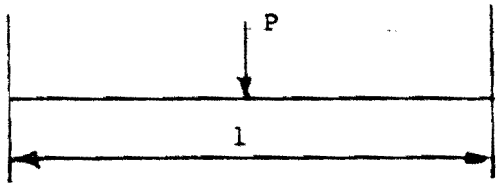

$M = Pl/8$ $\quad$ $P = 20{,}000$ Lb. $\quad$ $l = 30$ in.

$M = 20{,}000 * 30 / 8 = 75{,}000$ in-lb.

Maximum allowable bending stress = 21,600 psi.

Minimum section modulus = 75,000/21,600 = 3.47 in^3.

Section modulus for W8x24 = 20.9 in^3.

BOLT LOAD ON TIE PIECE (W8X18)

Maximum allowable bending stress = 21,600 psi.

Section modulus for W8x18 = 15.2 in^3.

To develop maximum bending stress, maximum moment = 21,600*15.2 = 328320. lb-in.

Using maximum bending moment at center, maximum shear at each end:

V = (3M)/(2l) l=119 in.

V = (3*328320)/(2*119) = 4138 Lb.

Load per bolt = 4138/4 = 1034 Lb.

TIE PIECE (W8X18)

Cryostat weight only used in the following calculations, load per foot = 12,500 Lb.
Distance to hitch point from ground = 11 in.
Maximum allowable bending moment = 328320. in-lb.

CASE 1 - Load needed at hitch point to apply maximum allowable bending moment (to yield point - 21,600 psi.) to tie piece. Disregarding cryostat weight (weight centered over axle)

F * 11 = 328320

F = 29,847 Lb.

CASE 2 - Load needed at hitch point to apply maximum allowable bending moment (to yield point - 21,600 psi.) to tie piece. Cryostat off center as far as possible away from hitch point.

Assuming a point load (worst case) offset towards the center of the transport cart, the maximum distance that the offset can be is 9.75". The plate is 31.5" and the cryostat stanchion is 12" dia. (31.5/2 - 6 = 9.75).

F * 11 + 12,500 * 9.75 = 328320

F = 18,768 Lb.

CASE 3 - Load needed at hitch point to apply maximum allowable bending moment (to yield point - 21,600 psi.) to tie piece. Cryostat off center as far as possible toward the hitch point.

Assuming a point load (worst case) offset away from the center of the transport cart, the maximum distance that the offset can be is 9.75". (See case 2).

F * 11 - 12,500 * 9.75 = 328320

F = 40,927 Lb.

NOTE; ALL CASES ABOVE USE WORST LOADING CONDITIONS RATHER THAN ACTUAL LOADING CONDITIONS.

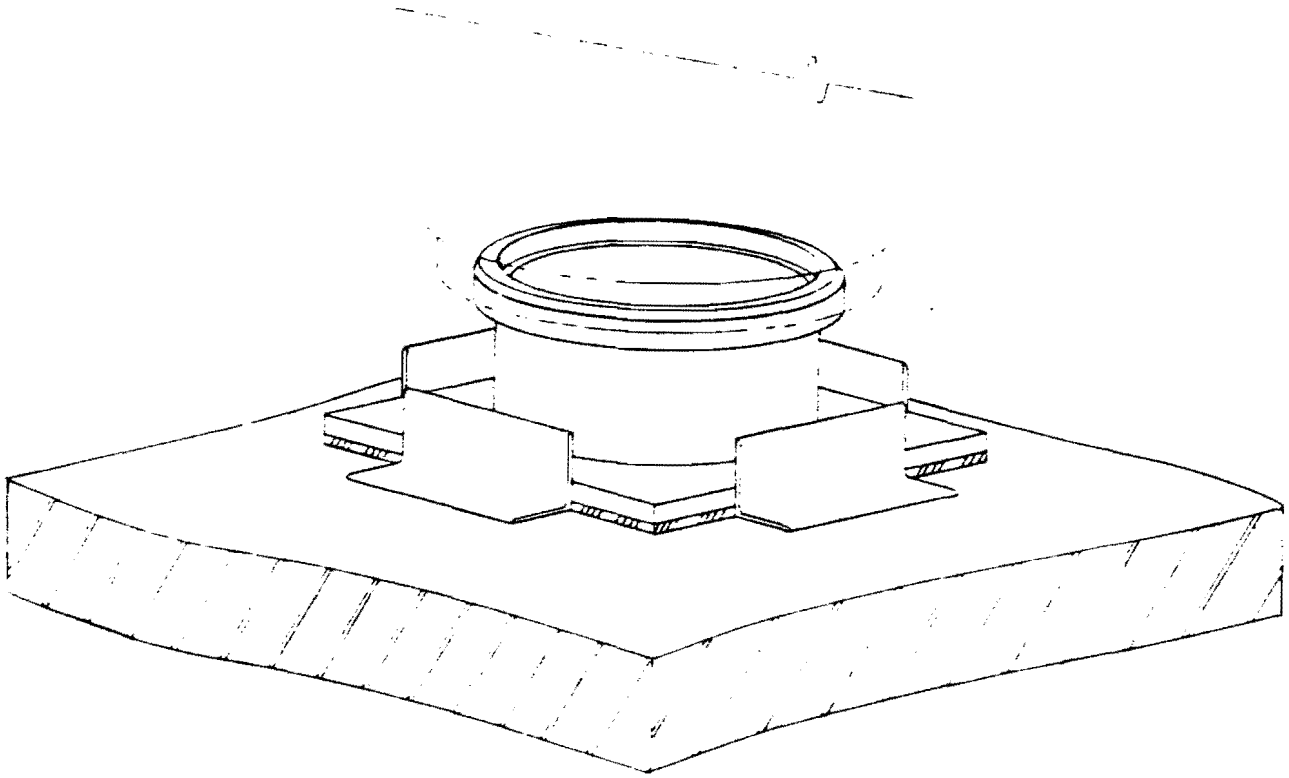

FIGURE 1

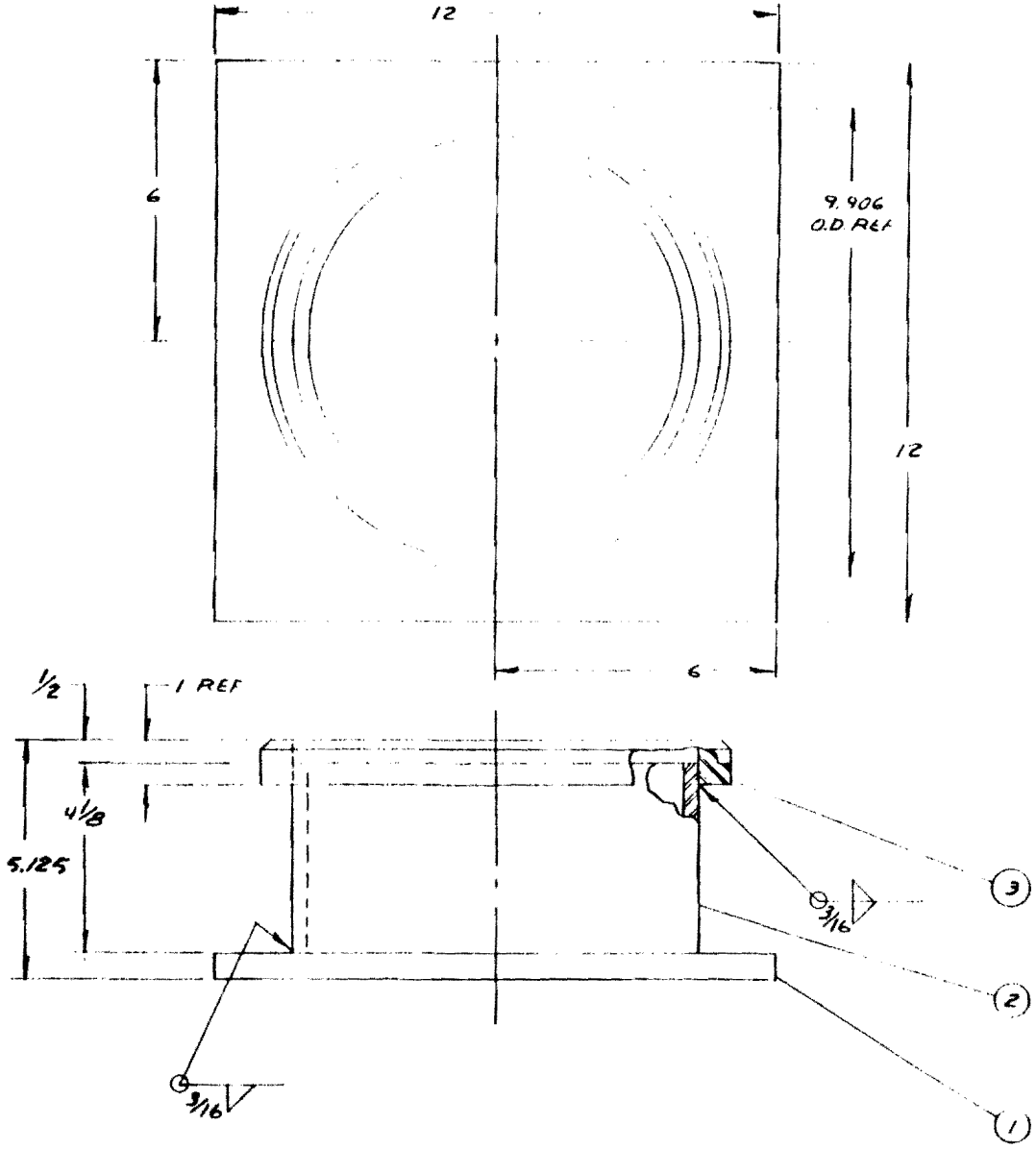

REV.	DESCRIPTION	APPD.	DATE

ITEM NO.	PART NO.	DESCRIPTION OR SIZE	QTY. REQ.
3	3740.214 MC-224639	STANDOFF RING	1
2	PIPE, 8 IPS	SCH. 40 X 4-1/8 C'STL	1
1	PLATE, 1/2 X 12 X 12	C'STL	1

PARTS LIST

UNLESS OTHERWISE SPECIFIED				
FRACTIONS	DECIMALS	ANGLES	ORIGINATOR	R. LUTHER
± 1/16	± .015	± ~	DRAWN	R. GLOOR 9/4/8
			CHECKED	[illegible] 9/4/87
			APPROVED	[illegible] [illegible]

1. BREAK ALL SHARP EDGES 1/64 MAX.
2. DO NOT SCALE DWG.
3. DIMENSIONING IN ACCORD WITH ANSI Y14.5 STD's.

√ MAX. ALL MACHINED SURFACES

USED ON 3740.214-MD-224645

MATERIAL: SEE ABOVE

FERMI NATIONAL ACCELERATOR LABORATORY
UNITED STATES DEPARTMENT OF ENERGY

D-0 DETECTOR
CRYOSTAT TRANSPORTER CAR
STANDOFF ASSEMBLY

SCALE	FILMED	DRAWING NUMBER
1/2 : 1		3740.214 MC-224638

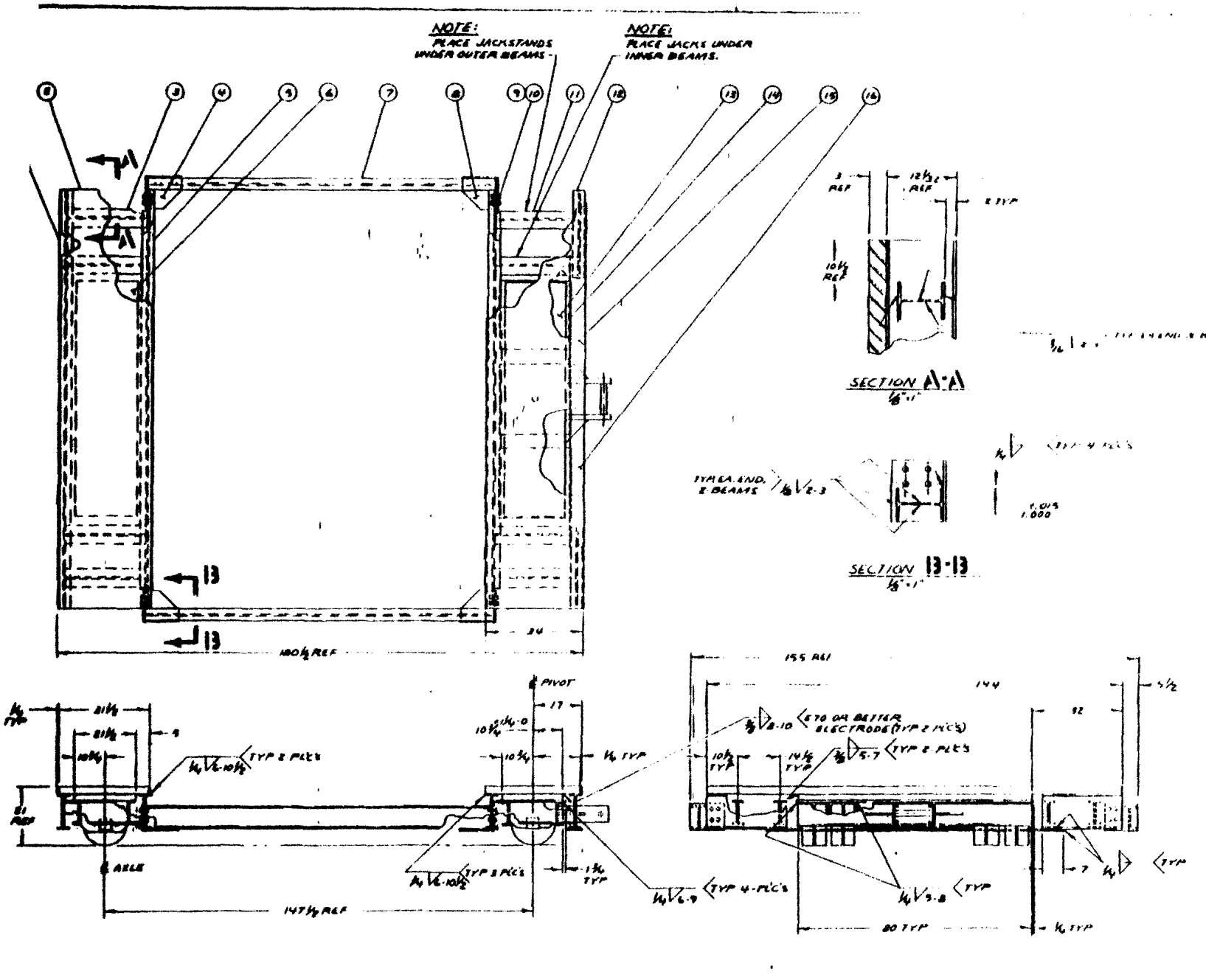

ITEM	PART NO.	DESCRIPTION OR SIZE	QTY.
16	3740.214-MB224604	TIE BAR	1
15		PLATE, 3x3x1/4	1
14		PLATE 1/4 x 24 x 24 A36	2
13		TRUCK PIVOTING; T/R 2x21 1/2 x 80 A36	1
12		W12x22 WF x 28 LG A36	2
11		W8x24 WF x 29 1/4 LG A36	4
10		5/8-11 x 2 HEAVY HEX STRUCT. BOLT A36	16
9		5/8-11 HEAVY HEX NUT	16
8	3740.214-MC224614	TIE BEAM SUPPORT R. FRONT	2
7		W8x18 WF x 114 LG	2
6		TRUCK; T/R 2x21 1/2 x 80 A36	1
5	3740.214-MC224610	CROSS PIECE	2
4	3740.214-MC224615	TIE BEAM SUPPORT R. FRONT	2
3		W8x24 WF x 27 LG A36	4
2		PLATE 3x31 x 1/4 x 144 A36	1
1		W12x22 WF x 144 LG A36	1

PARTS LIST

DRAWN	K. WEBER	
CHECKED	R. GLOOR	8/14/87
APPROVED	[illegible]	8/24/87

USED ON

MATERIAL: SEE ABOVE

FERMI NATIONAL ACCELERATOR LABORATORY
UNITED STATES DEPARTMENT OF ENERGY

D-0 DETECTOR
CRYOSTAT TRANSPORT CART
ASSEMBLY

1/16 & NOTED

3740.214-MD-224606