D-Zero Cooling Loops

T. Peterson
S. Wintercorn

8/10/87

D-Zero Engineering Note 3740.000-EN-104

Approved: Tom Peterson

D-Zero Cooling Loops

Introduction

This report provides the necessary sizing for the LN_2 cooling coils in the D-Zero cryostats. Natural convection from finned tubes will be the means of cooling the cryostats and their contents until such time as liquid can be made by condensing.

Each cryostat will contain three seperate cooling runs (see figs. 1,3). Two runs will be cooldown and the other steady state. These runs will be placed in each cryostat as shown in fig. 3, 4a & 4b. By assuming a 100 K tube wall temperature, tube diameter (3/4") & wall thickness (0.065") and the total length of tube (2 X 2940" + 1463"), the heat transfer can be calculated. Table 1 was calculated from relations in Handbook of Heat Transfer Fundamentals for free convection, p. 6-34 through 6-40.

Table 1

Rate of Heat Removal from Argon (Kw)
T_∞ (K), gas temp. away from walls

#fins/inch 0.20" thick	300	250	200	150
4	109	80	52	24
6	160	118	76	35
8	200	148	97	44
10	218	165	109	52
12	**210**	**162**	**110**	**53**
14	192	148	102	48
16	172	133	94	44

The assumed pipe surface area = fin surface area = 19.76 cm^2/fin. The optimum solution is highlighted.

LN_2 Flow and ΔP

The heat transfer from the finned tubing could provide up to 200 Kw of cooling, but only ≈ 50 Kw for T_∞ = 150 K. Temperature gradient considerations in the module end plates will limit the cooldown rate to less than 20 Kw. If the LN_2 is at 88K and 3 atm. (29 psig) and the flow for 20 KW is assumed then the ΔP in the tubes can be calculated.

$$\Delta P = 0.5*rho*v^2[(L/R_h)*f + \Sigma e_v]$$

rho = density
v = velocity
L = length of tube
R_h = hydraulic radius
f = tube friction factor
Σe_v = losses due to fittings and elbows

The mass flow at 20 Kw can be calculated by dividing by the heat of vaporization (183 J/g @ 3 atm., see also, fig. 5, Variation of heat of vaporization with pressure for nitrogen.) to give 109 g/s total flow or 4.75 g/s flow per parallel pass. The liquid ΔP is 59 times less than the vapor ΔP and will be neglected. Table 2 gives a breakdown of the vapor pressure drops at different tube lengths for the various configurations of the 23 parallel passes.

Table 2

Tube Length(in)	180^0bends	ΔP (psid)
224.25	2	0.065
36.5	4	0.038
182.5	4	0.069
174.75	4	0.068
231.75	4	0.080
215.75	2	0.063
117.25	2	0.042

Conclusions

From the table of heat removal from argon, the optimum number of fins per inch is 12. The pressure drop per tube run is very smallin comparison to the driving force available. The vapor velocity in the outlet manifold is less than 70 cm/sec calculated from the equation below.

$$V_{max} = Mdot/(rho_{gas}*A)$$

V_{max} = maximum velocity
Mdot = mass flow rate
rho = density

D ZERO CALORIMETER

CRYO-LOOP CONFIGURATION

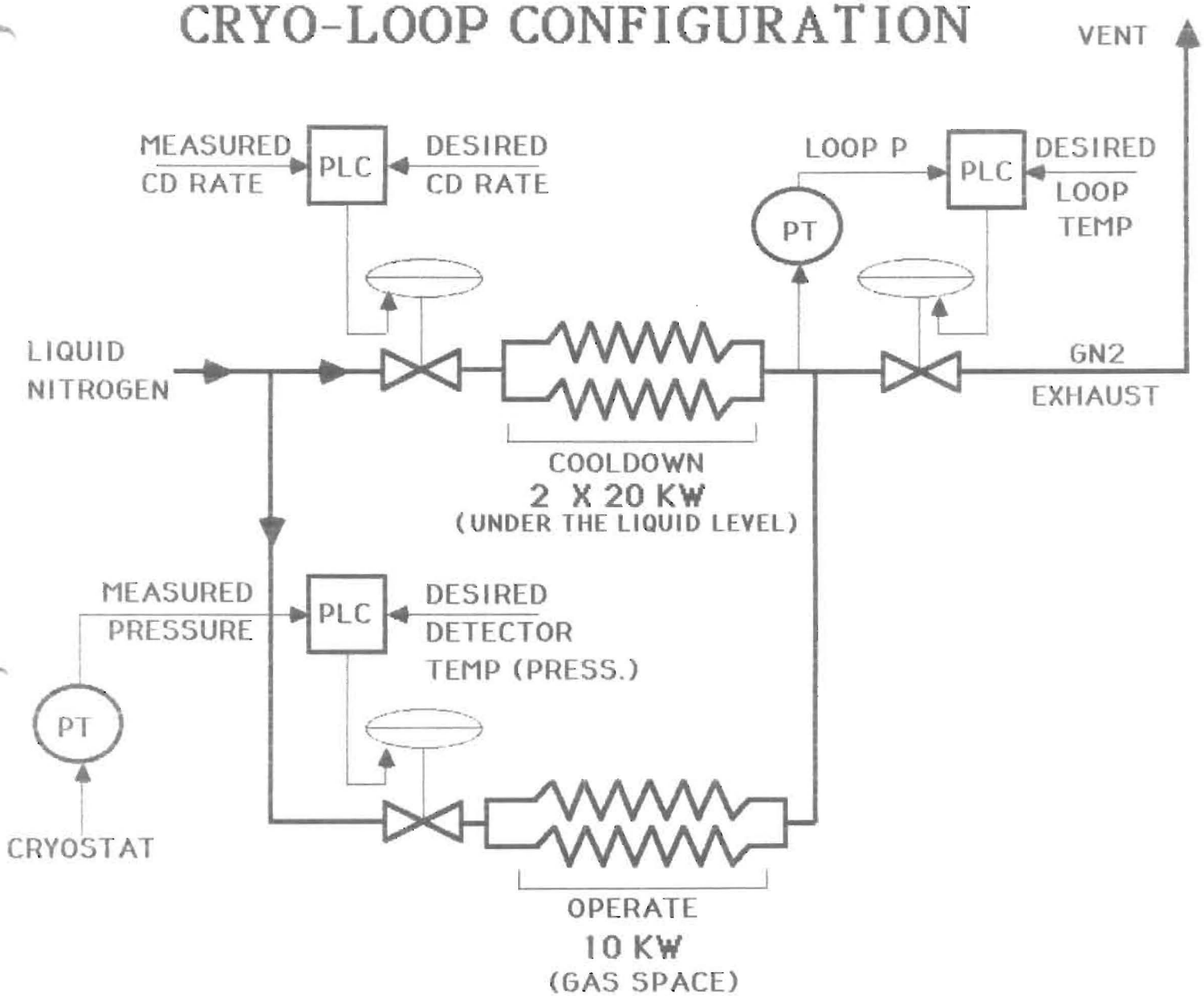

Figure 1

GTM 6/87

D ZERO CRYOSYSTEM

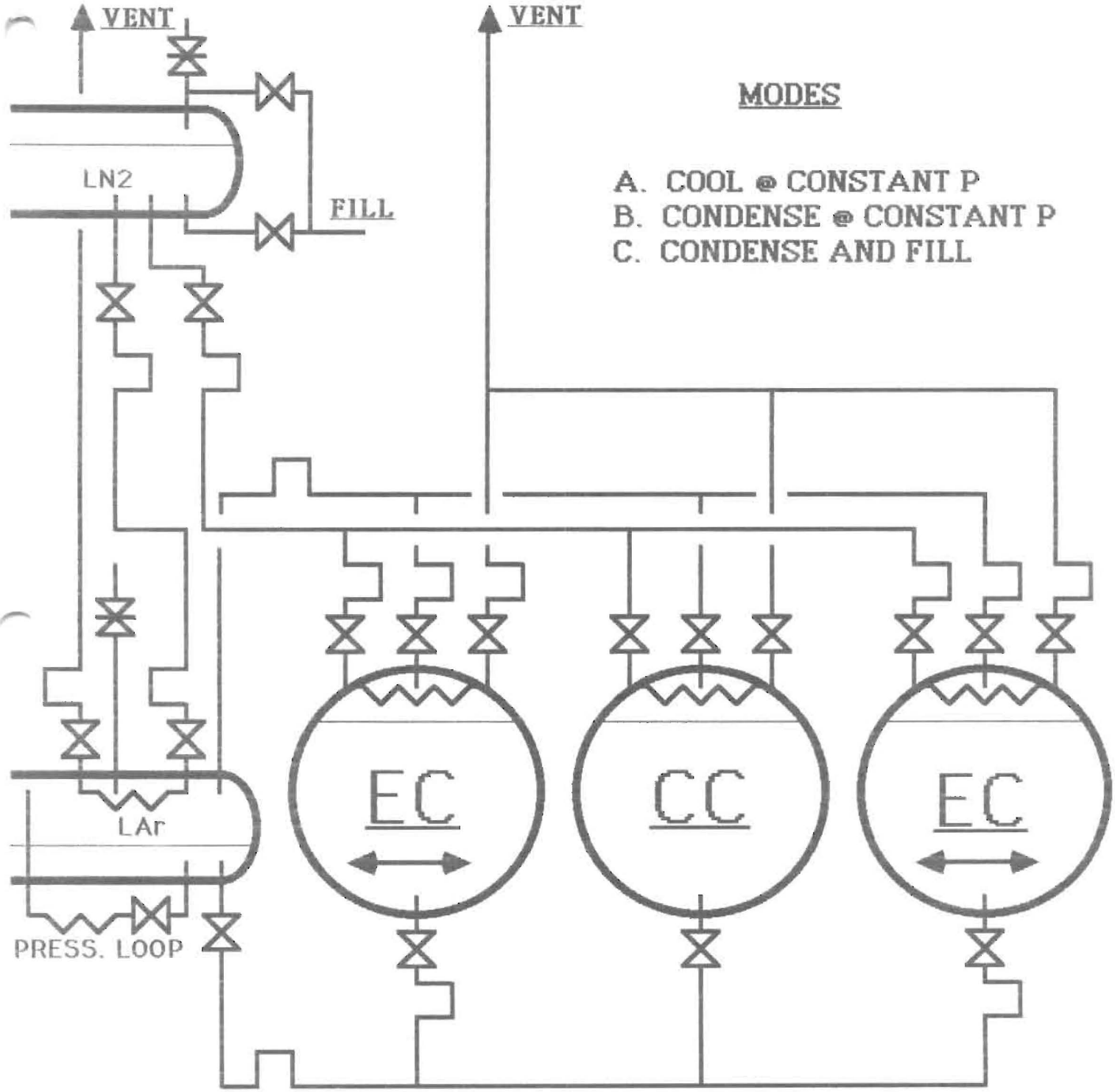

Figure 2

GTM 6/87

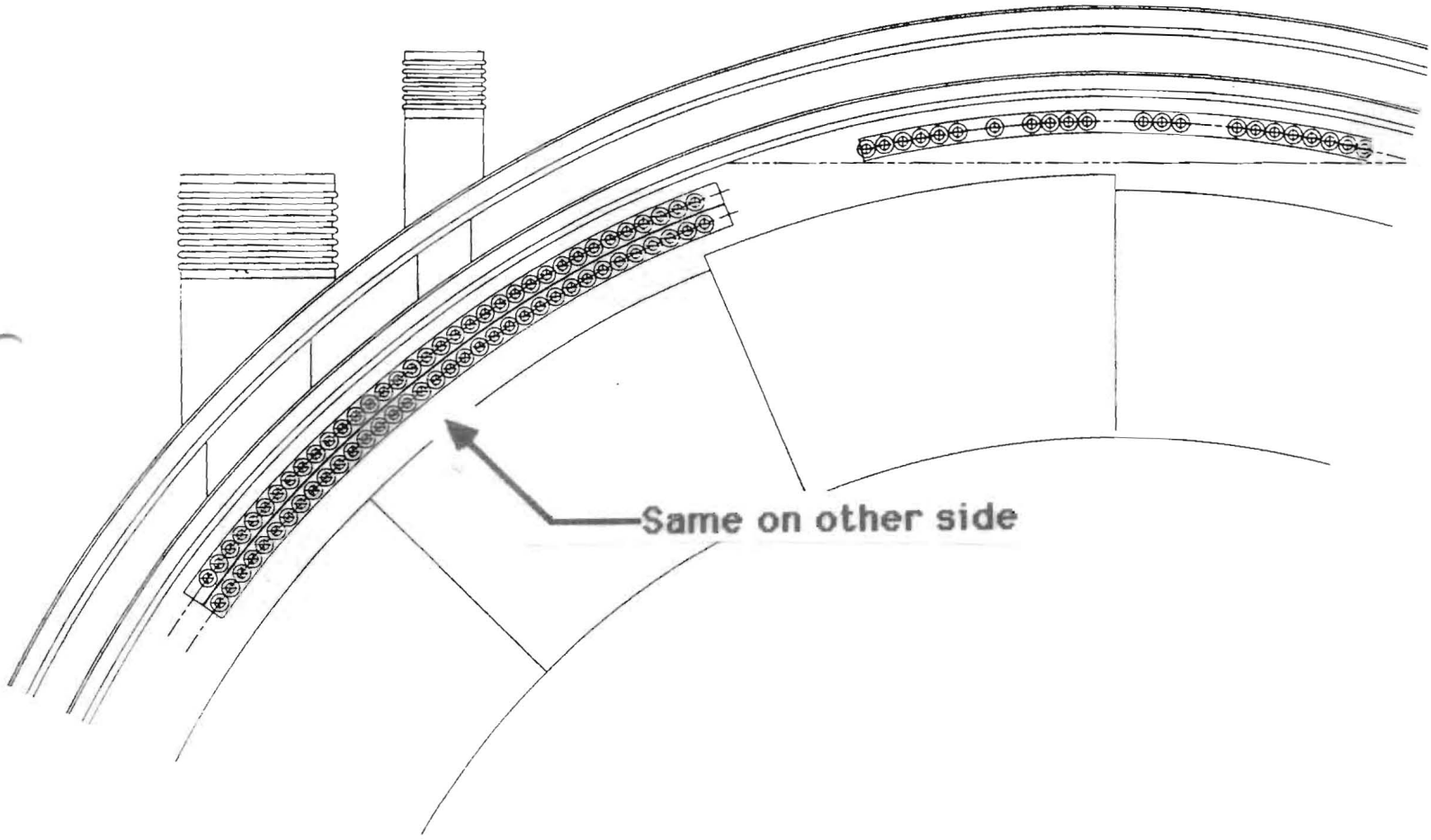

Figure 3

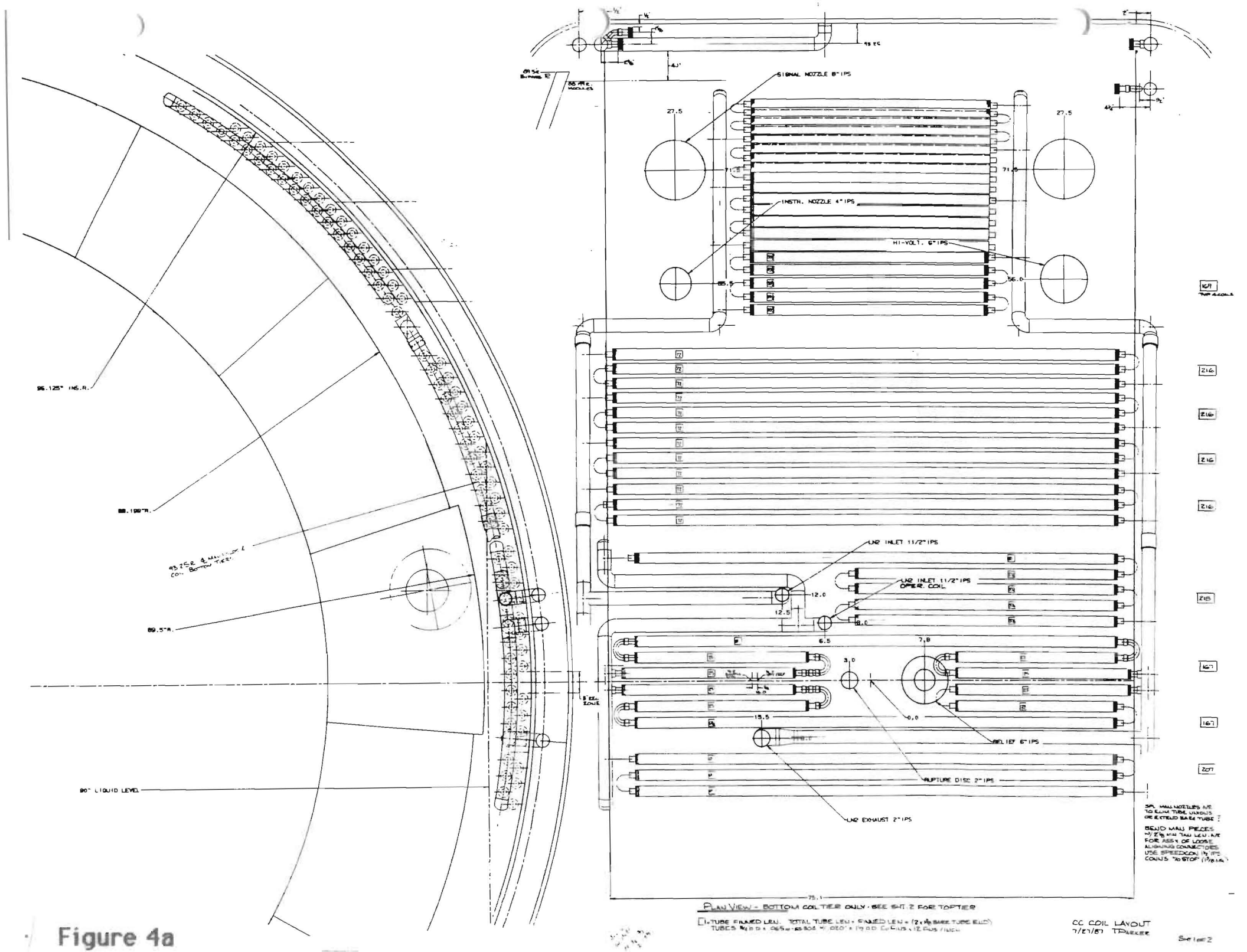
SIGNAL NOZZLE 8" IPS
INSTR. NOZZLE 4" IPS
HI-VOLT. 6" IPS
LN2 INLET 11/2" IPS
LN2 INLET 11/2" IPS OPER. COIL
RELIEF 6" IPS
RUPTURE DISC 2" IPS
LN2 EXHAUST 2" IPS
96.125" INS.R.
89.5"R.
90" LIQUID LEVEL
PLAN VIEW - BOTTOM COIL TIER ONLY - SEE SHT. 2 FOR TOP TIER
CC COIL LAYOUT
7/27/87 T PARKER
SHT 1 OF 2

Figure 4a

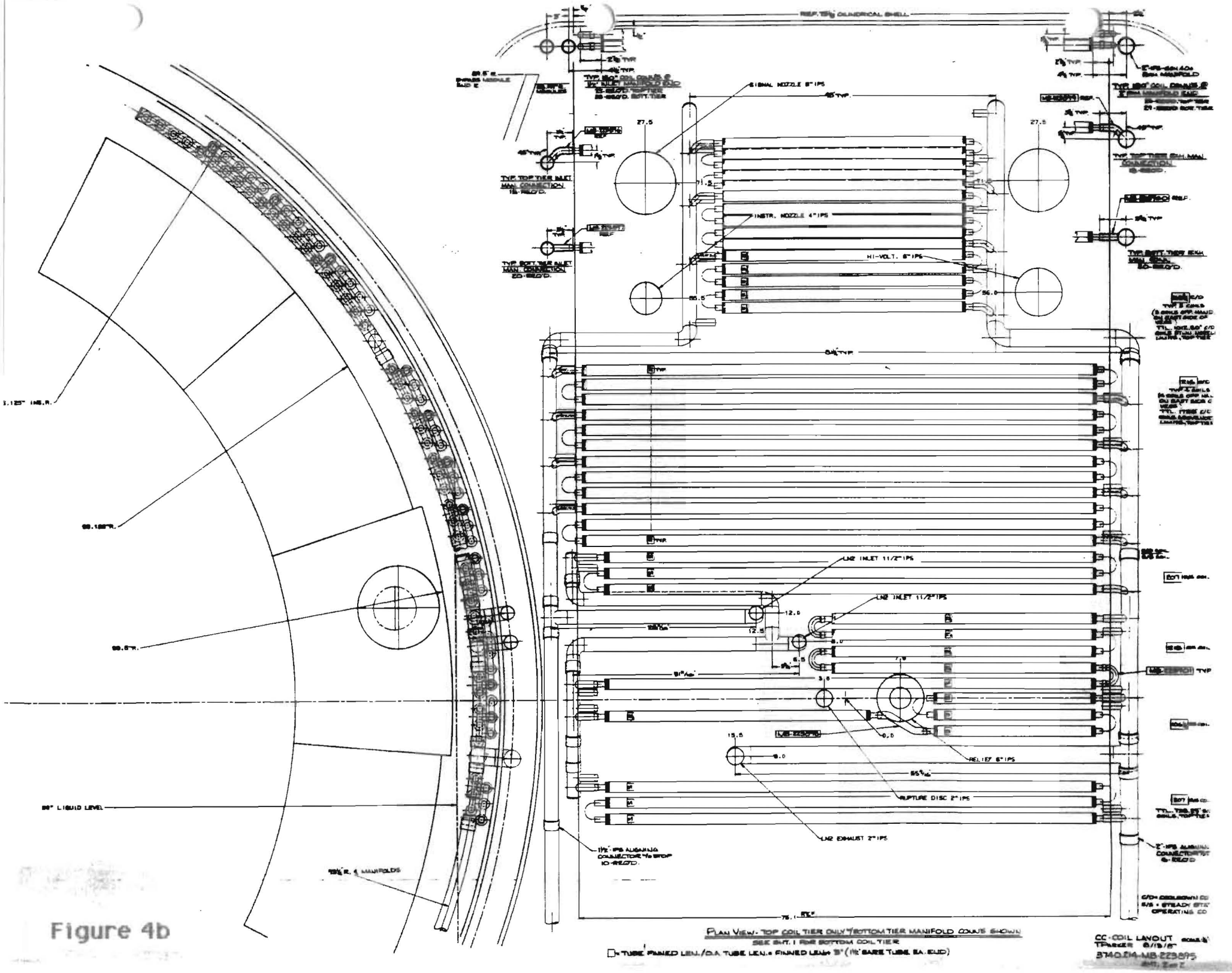
SIGNAL NOZZLE 8" IPS
INSTR. NOZZLE 4" IPS
HI-VOLT. 8" IPS
LN2 INLET 1 1/2" IPS
LN2 INLET 1 1/2" IPS
RELIEF 6" IPS
RUPTURE DISC 2" IPS
LN2 EXHAUST 2" IPS
90" LIQUID LEVEL
PLAN VIEW - TOP COIL TIER ONLY/BOTTOM TIER MANIFOLD COUNTS SHOWN
SEE SHT. 1 FOR BOTTOM COIL TIER
CC-COIL LAYOUT

Figure 4b

HEAT OF VAPORIZATION VS. PRESSURE

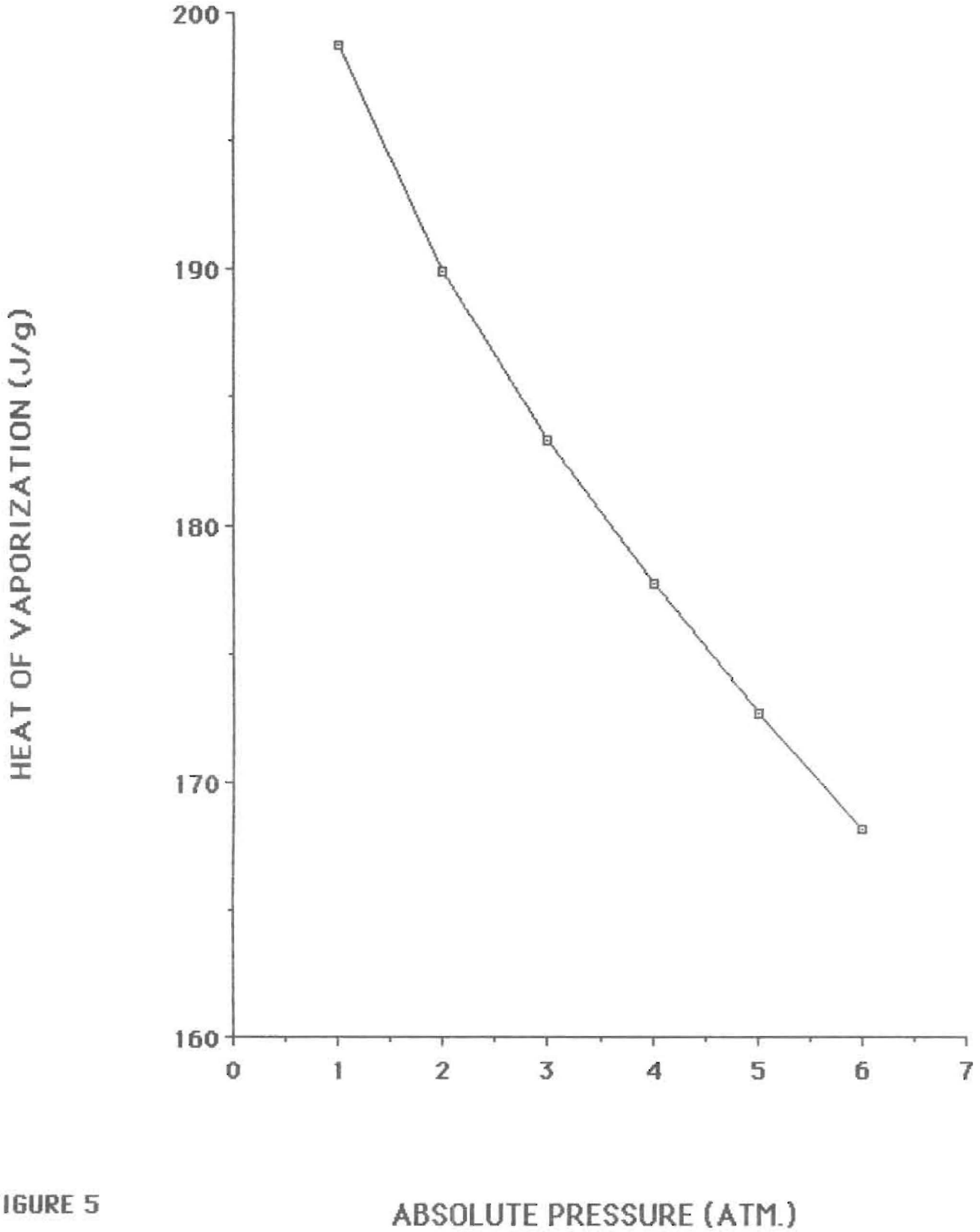

FIGURE 5