Flexible Support

Inconel Vertical Supports

D-Zero Engineering Note 3470.214-EN-74

D. L. Rudland

5/12/87

Program code written by:

K. Krempetz
K. Weber
2/13/86

Approved Michael P. May

Introduction

A substantial section of the Central Calorimeter flexible support system are the Inconel Vertical Support Plates. These plates are designed to support the Central Calorimeter's weight, withstand the necessary thermal contraction, and position the Central Calorimeter accurately. A top view of the Central Calorimeter (CC) shows the plate arrangement.

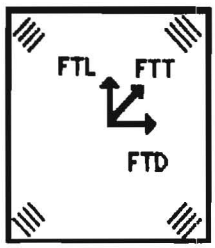

Figure 1

The box represents the calorimeter and the angled lines represent the position of the inconel plates. FTL is the force exerted along the length of the CC due to thermal contraction, FTD is the force exerted in the diametral direction of the CC due to thermal contraction, and FTT is the vector sum of the two. The plates were chosen in this orentation to best withstand the CC's thermal movement. Other than the thermal contraction constraint, the plates must satisfy two others. First, the plates must fit into a twelve inch Schedule 40 tube, which is nothing more than the outer shell of the flexible support. Secondly, the length of these plates must be kept under fifteen inches for cost purposes. Drawing number 3740.210-MD-222269 Rev. C (Figure 3) shows the final design that satisfies all conditions noted above.

Thermal Contraction

Since liquid argon is at a much lower temperature (90K) than the ambient temperature (295K), thermal contraction in the radial and axial directions will occur in the CC when the liquid argon is present. From drawing number 3740.220-ME-222256 Rev. G, the outer radius of the inner vessel is 96.75 inches. From this, the circumference is calculated to be **607.898 inches.**

For a change in length ΔL (From Reference 2)

$$\Delta L = e_t L$$

Where;

$e_t = \int \mu_t \, dT$ = Unit thermal contraction between initial and final temperatures

μ= Linear coefficient of thermal expansion
L= Length of the calorimeter
T= Temperature

From Table 7-6 of Reference 2, using 304 Stainless Steel as an approximation;

$$\Delta L/L = .00291$$

The diagrams below show the change in length in both the axial and radial direction

Radial Direction

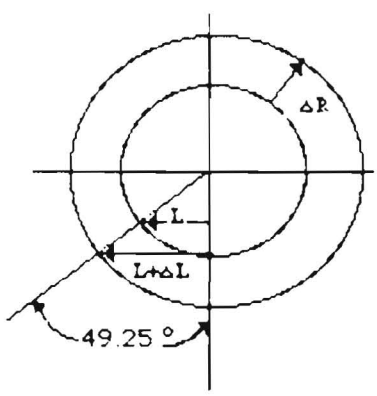

Axial Direction

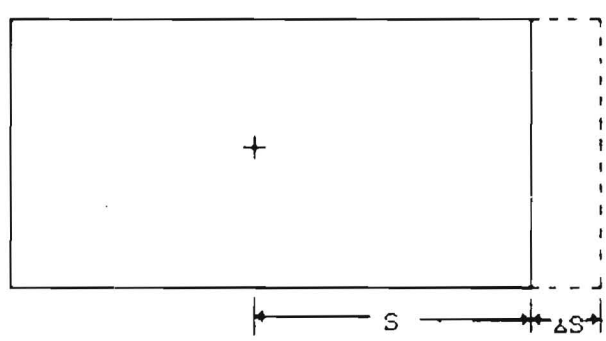

Figure 2

Applying the above formula for the change in length to the circumference of the calorimeter;

$\Delta C = e_t C =$ **1.769 inches**

From geometry, the change in radius is calculated

$\Delta R = \Delta C/(2\pi) =$ **0.28154 inches**

Figure 4 shows that the length between supports is 47.81 inches in the axial direction, and that the angle at which the supports are located relative to the center of the calorimeter is 49.47^0. Since the apparatus is essentially fixed in the center, each side of the calorimeter experiences only one half of the total contraction. From this and figure 2, $\Delta S =$ **0.0696 inches** and $\Delta L =$ **0.214 inches.** The resultant of these movements will be the total thermal contraction the plates experience. Therefore $\Delta LT = (\Delta S^2 + \Delta L^2)^{1/2} =$ **0.225 inches**.

Element Constants

Central Calorimeter weights are given in Reference 3 as follows:

EM Module	21.49 Tons
Fine Hadronic Module	142.97 Tons
Outer Course Module	128.30 Tons
Inner Cryostat	19.39 Tons
Argon	29.15 Tons
Total	341.17 Tons

The load per support is then 85.2975 Tons= **170,585 pounds**

Material constants for Inconel 718 from Reference 5 are as follows:

Minimum Yield Strength= 150,000 psi
Minimum Ultimate Strength= 180,000 psi
Minimum Modulus of Elasticity= 29.8×10^6 psi

Design Equations

Since thermal contraction occurs in both the radial and axial directions, two seperate forces will be exerted on the Inconel plates. One force will try to crush and buckle the plates while the other will try to bend them (This is assuming that the deflection of the cradle and the force it exerts are eliviated by the self-lubricating bearing and the G-10 support disc, respectively). The AISC code (Reference 4) has an equation that if satisfied, the plates will be safe. The equation is as follows:

$$f_a/F_a + C_m f_b/(1-fa/F_E)F_b \leq 1.0$$

Where;

f_a= Computed axial stress

F_a= Axial compressive stress permitted

C_m= Constraint coefficient = 0.85 (Reference 4)

f_b= Computed bending stress

F_E= Euler stress divided by a factor of safety

F_b= bending stress permitted

$$f_a = P/A$$

Where;

P= Load per support per number of plates in support
A= Area of support plate (width*thickness)

$$F_E = 12\pi^2 E/(23(KL/r)^2)$$

Where;

E= Modulus of Elasticity
L= Length of Plate
r= Radius of gyration (Reference 3 Table 1 Case A for rectangles r= 0.2886* Thickness)
K= End Coefficient (Reference 4 Section 1.8 K=1.2)

Fb is computed from the formulas in Reference 3 Table 10 Case 1B

$$M_{max}=(W/k)\tan(kL/2)$$

$$y_{max}=(W/kP)(2\tan(kL/2)-kL)$$

$$S=F_b=Mc/I$$

$$F_b=(6Py\tan(kL/2))/(2\tan(kL/2)-kl)bt^2$$

Where;

W= Lateral load (thermal force)
k= $(P/EI)^{1/2}$
P= Compressive load (weight)
L= Length of plate
I= Moment of inertia (Rectangle $I=bt^3/12$
b= Width of plate
t= Thickness of plate
y= Thermal contraction

$$f_b=0.75\,F_y$$

Where;
0.75 Fy comes from Reference 4 section 1.5.1.4.3
Fy= Minimum yield strength

The formulas mentioned above are combined in a fortran program that will determine ideal plate length that satisfies all design parameters (Appendix 1).

Moment of Inertia

Another fortran program was written to determine the moment of inertia of the flexible support relative to a reference angle. The program calculates the moment of inertia in plane I-I relative to the angle A of figure 5.

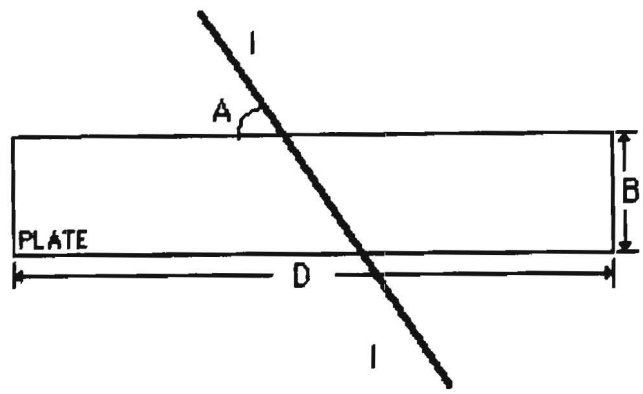

Figure 5

In the ideal case, the plates will line perpendicular to the diagonal of the calorimeter (ie. A= 90 degrees Figure 1). The program and its output are in Appendix 3. The output shows that if the plates deviate only 3 degrees from the ideal case, the moment of inertia, therefore the stiffness, will increase by 200 %.

Force Due to Thermal Contraction

Since thermal contraction moves the top of the flexible foot by 0.225 inches, this will cause a force on the inconel plates. From Appendix 3 and assuming a 1 degree misalignment, the moment of inertia of the foot equals **0.734 in^4**. The downward force exerted on each support is approximately **190,000 lbs.** From Roark and Young, Table 10 case 1b

$$y=0.225=-(H/kW)\,(2\tan(kl/2)-kl)$$

Where

H= Horizontal load

W=Vertical load=190,000 lbs

$k=(W/EI)^{1/2}=(190{,}000/33E6(0.734))^{1/2}=\mathbf{0.08802}$

l=Effective length= 12 inches

Therefore

$H=-0.225(0.08802)(190{,}000)/(2\tan(1.056/2)-1.056)=$ **34,063.176 lbs**

Braze Material

Wall Colmonoy Corp. in Detroit brazed the Inconel plates to the stanchion with a process called NICRO-BRAZE. This process gives an ultimate on the braze of 60 ksi. Appendix 4 shows that for this case a factor of safety of **5** is present for shear of the braze material. Since the plates are inserted into slots in the stanchion, the brazing does nothing more than to secure the plates. Without the brazing, the structure still would be safe under the compressive and bending loads.

Conclusion

Through many iterations, a final design (Figure 3) that satisfies the criterion in this report was decided upon. Appendix 2 shows a run of the design program with the final design parameters set. From the output, a length between twelve and thirteen inches would be ideal. The only variation between the parameters in the program and the final design is the stepping of the Inconel plates width . The program generated that a average width of 7.7 inches would be sufficient. The plates are stepped to allow greater thermal movement, while keeping an average 7.7 inch thick plate.

A model has been made and distructively tested (EN-87), while the final design will be load tested to the actual load.

Figure 3

REV.	DESCRIPTION	DRAWN / APPD.	DATE / DATE
A	REDRAWN	C. REID	2-21-86
B	REDRAWN	J. BRANDT	9-16-86
C	125 PHONO FINISHES WERE 63 1 3/16 R. WAS 1 1/2", ADDED 10" C'BORE & 30° CHAMFER, MAX. SURFACE FINISH WAS 32	T. PARKER	11-21-86
D	8.000" C'BORE WAS 7.000", 11.000" DIA. WAS 11.928", REMOVED 1/4" x 30° CHAM. ON BOTT.	T. PARKER / RK.	4/27/87 / 4/30/87

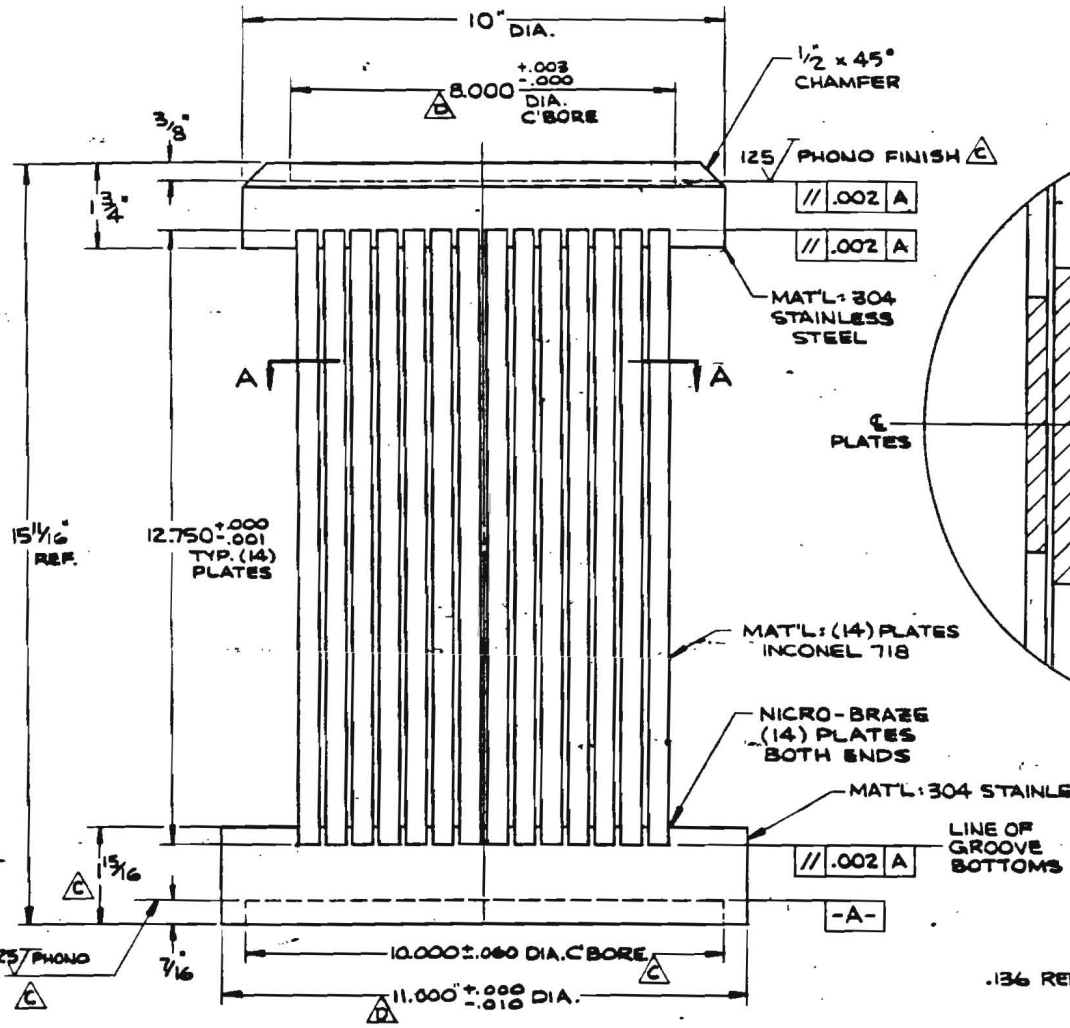

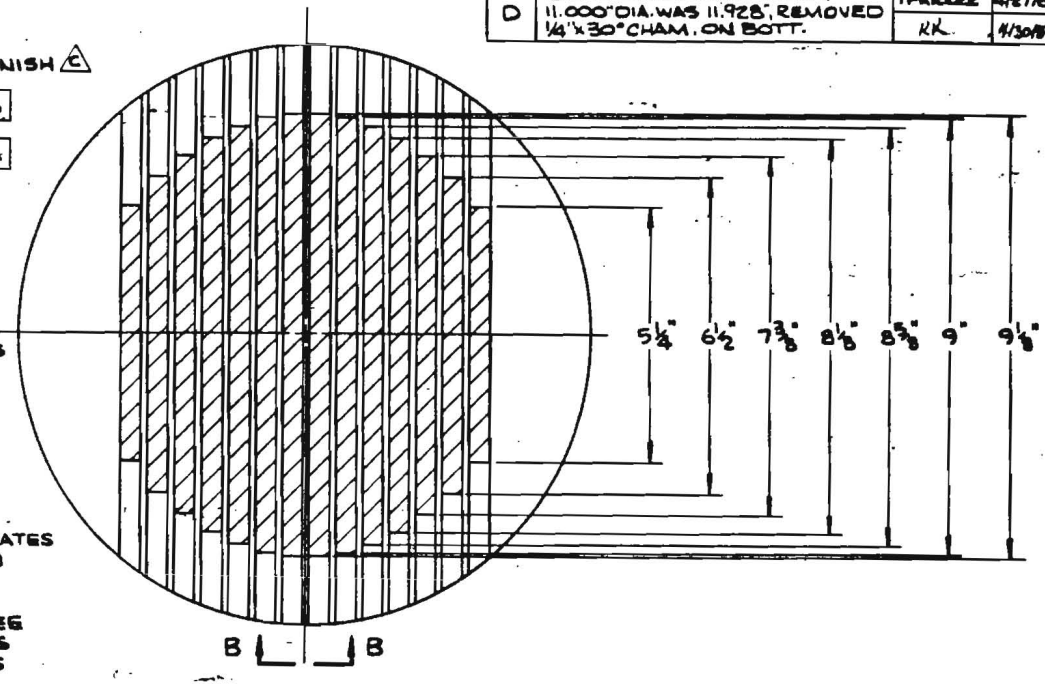

SECTION A-A

THE FOLLOWING TESTS SHALL BE PERFORMED AND DOCUMENTED FOR EACH FLEXIBLE SUPPORT ASSEMBLY:

1) WITH NO AXIAL LOAD ON THE ASSEMBLY AND WITH THE BOTTOM OF THE ASSEMBLY FIXED, THE TOP PLATE SHALL BE DEFLECTED .25" ± .01" HORIZONTALLY IN A DIRECTION NORMAL TO THE VERTICAL PLATES. THE FORCE REQUIRED TO EFFECT THIS DEFLECTION SHALL BE RECORDED.
2) THE ASSEMBLY SHALL THEN BE LOADED AXIALLY WITH A MINIMUM FORCE OF 200,000 LB. AND THE TOP PLATE SHALL AGAIN BE DEFLECTED .25" ± .01" AND THE REQUIRED FORCE RECORDED.
3) THE ASSEMBLY SHALL THEN BE VISUALLY EXAMINED FOR CRACKS, PERMANENT DISTORTIONS, AND BROKEN BRAZE JOINTS.

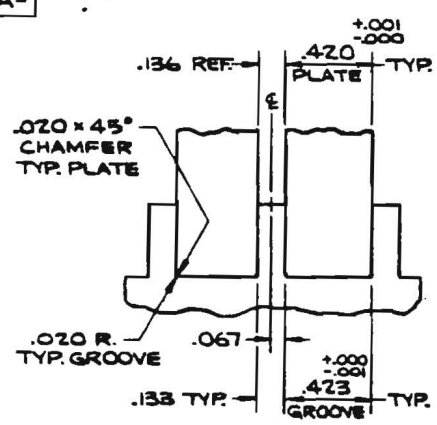

VIEW B-B
2x SIZE

ITEM NO.	PART NO.	DESCRIPTION OR SIZE	QTY. REQ.
		PARTS LIST	

UNLESS OTHERWISE SPECIFIED			ORIGINATOR	K. KREMPETZ	
FRACTIONS	DECIMALS	ANGLES	DRAWN	C. REID	2-21-86
± 1/64	± .005	± 1°	CHECKED	R.O. Taylor	11-25-86
1. BREAK ALL SHARP EDGES 1/64 MAX.			APPROVED	G.T. Mulholland	11/25/86
2. DO NOT SCALE DWG.			USED ON	MD-223885 3740.214-ME-223235	
3. DIMENSIONING IN ACCORD WITH ANSI Y14.5 STD'S.			MATERIAL	AS NOTED	
125 MAX. ALL MACHINED SURFACE					

FERMI NATIONAL ACCELERATOR LABORATORY
UNITED STATES DEPARTMENT OF ENERGY

DØ DETECTOR
CENTRAL CALORIMETER CRYOSTAT
FLEXIBLE SUPPORT ASSEMBLY

SCALE	FILMED	DRAWING NUMBER	REV.
1/2 SIZE		3740.210-M 222269	D

Figure 4

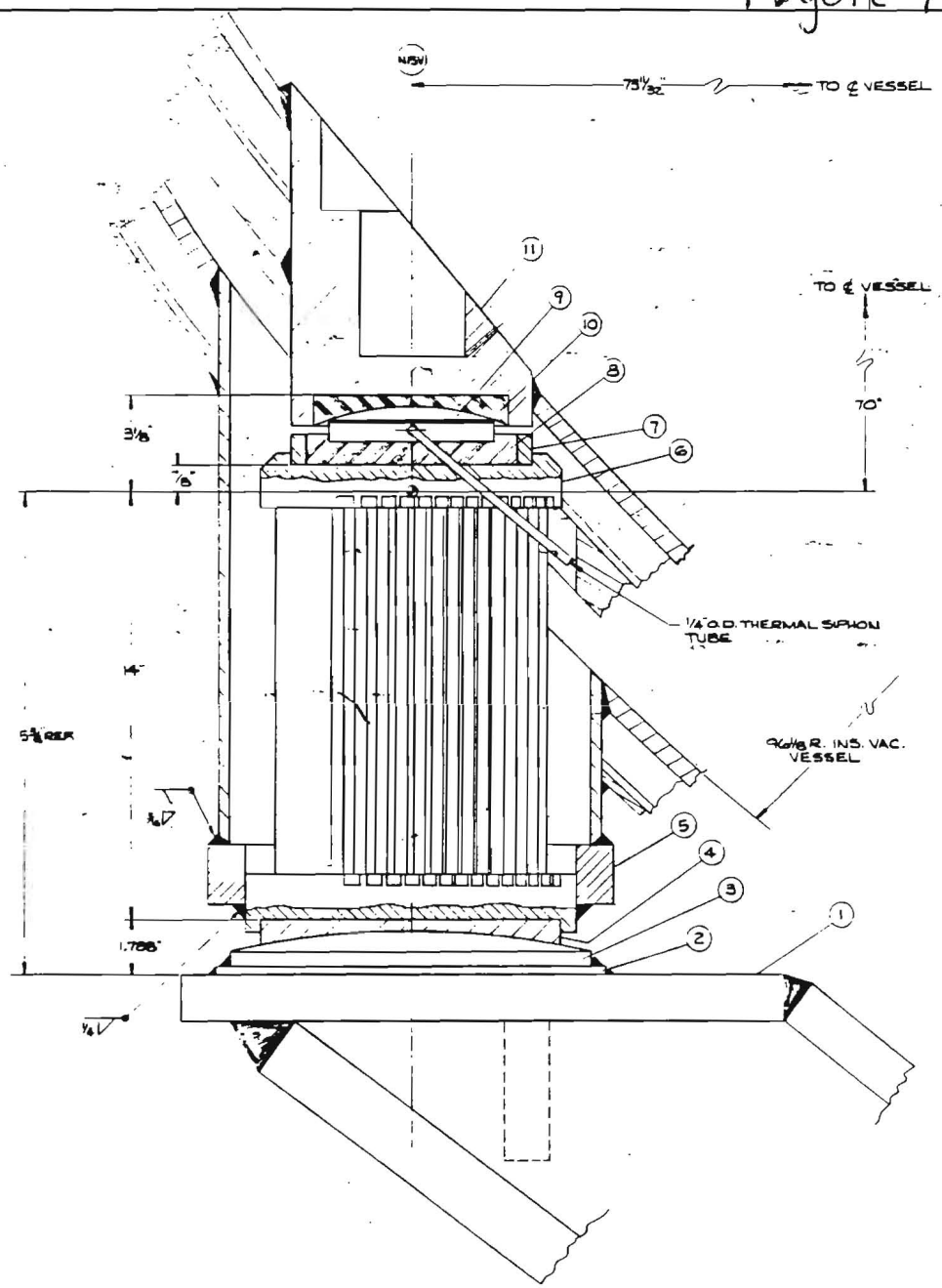

REV.	DESCRIPTION	DRAWN	
		APPD.	

ITEM NO.	PART NO.	DESCRIPTION OR SIZE
11	MD-223237-1	ARGON VESS. SUPPORT BOSS
10	MD-223237-2	CONCAVE G-10 SUPPORT DISC
9	MD-223237-3	THERMAL SIPHON DISC
8	MD-223237-4	G-10 SUPPORT DISC
7	MD-223237-5	S.S. SHEAR RING
6	MC-222269	FLEXIBLE SUPPORT
5	MD-223237-6	S.S. ADJ. WELD RING
4	MC-223735	CONCAVE FOOT MOUNT
3	MC-223736	CONVEX FOOT MOUNT
2		1/4" SHIM R.x15"SQ.-S.S. 304
1	ME-223220	CRADLE ASS'Y.

PARTS LIST

DRAWN	R. LUTHER	
CHECKED	T. PARKER	4/27
APPROVED	[illegible]	4/3

USED ON ME-223235

MATERIAL AS NOTED

FERMI NATIONAL ACCELERATOR LABORATORY
UNITED STATES DEPARTMENT OF ENERGY

D-Ø DETECTOR
CENTRAL CALORIMETER CRYOSTAT
SUPPORT STANCHION - N15V

SCALE	FILMED	DRAWING NUMBER
1/2"=1"		3740.214-MD-223885

Appendix 1

Design Program

Appendix 1

```
      PROGRAM LEG1(INPUT,OUTPUT,TAPE5,TAPE6)
C**BY K. KREMPETZ ON 2/13/86
C**PROGRAM TO CALCULATE THE COMBINED STRESS(AXIAL AND
C  BENDING) OF A DO CCRYOSTAT SUPPORT LEG IN ACCORDANCE
C  WITH THE AISC CODE.
C**DEFINING VARIABLES:
C  P=WEIGHT ON SUPPORT LEG
C  Y=MAX.MOVEMENT OF LEG DUE TO THERMAL CONTRACTION
C  T=THICKNESS OF PLATES
C  B=WIDTH OF PLATES
C  E=MODULUS OF ELASTICITY
C  I=MOMENT OF INERTIA
C  K=(P/I*E)**.5
C  N=NUMBER OF PLATES
C  F=EULER STRESS DIVIDED BY A SAFTEY FACTOR
C  G=COMPUTED AXIAL STRESS
C  L=LENGTH OF PLATES
C  S=COMPRESSIVE BENDING STRESS
C  Z=THE COMBINED STRESS FACTOR (MUST BE LESS THAN 1)
C  LR=SLENDERNES
C  FY=MINIMUM YIELD STRENGTH
C  FYS=MINIMUM BENDING STRESS PERMITTED
C  GF=G/F
      REAL P,Y,T,B,K,N,F,G,Z,FY,FYS,LR,GF
      E=29600000
      FY=150000
      N=14
      T=.42
      Y=.225
C  PLATE WIDTH=(PLATE THICKNESS+GAP BETWEEN PLATES)*NUMBER
C  OF PLATES
      B=N*(T+.134)
      PRINT 101
 101  FORMAT('LENGHT=',5X,'SLENDERNESS RATIO=',5X,'COMBINE STRESS FACTO
     1R=')
C**INCREMENT LENGHT TO OPTIMIZE SOLUTION
      DO 100 L=1,30
      P=170585./N
C**EQUATIONS FROM ROARK AND YOUNG 5TH ED. TABLE 10 CASE 1B
      K=(P/(.083*E*B*T**3))**.5
      S=6*P*Y*TAN(K*L/2)/((2*TAN(K*L/2)-K*L)*B*T**2)
C**EQUATION FROM MANUAL OF STEEL CONSTRUCTION P.5-26 SECTION 1.6
      LR=1.2*L/(.2883*T)

      F=.2976*E*T**2/L**2
      FYS=.75*FY
      G=P/(T*B)
      GF=G/F
      Z=(G/F)+(.85*S/((1-G/F)*FYS))
C**CKECK G/F IF IT EXCEEDS 1 SUPPORT VIOLATES THE CODE: SET Z=0
      IF (GF.GT.1) Z=0.0
      PRINT102,L,LR,Z
 102    FORMAT(7X,I2,21X, F5.1,22X, F6.3)
 100  CONTINUE
      END
```

Appendix 2

Design Program Output

Appendix 2

LENGHT=	SLENDERNESS RATIO=	COMBINE STRESS FACTOR=
1	9.9	63.722
2	19.8	16.048
3	29.7	7.231
4	39.6	4.160
5	49.6	2.755
6	59.5	2.008
7	69.4	1.576
8	79.3	1.315
9	89.2	1.155
10	99.1	1.062
11	109.0	1.015
12	118.9	1.003
13	128.8	1.019
14	138.7	1.061
15	148.7	1.129
16	158.6	1.227
17	168.5	1.372
18	178.4	1.602
19	188.3	2.076
20	198.2	4.337
21	208.1	.000
22	218.0	.000
23	227.9	.000
24	237.8	.000
25	247.8	.000
26	257.7	.000
27	267.6	.000
28	277.5	.000
29	287.4	.000
30	297.3	.000

According to AISC code (Reference 4), when the computed axial stress divided by the Euler stress becomes greater than 1.00, the formulas mentioned in this report become invalid. The program checks for this and prints zero for the combined stress factor for these cases.

AISC code states that the slenderness ratio (KL/r) should not exceed 200 for compressive members. For the design of Figure 3, the slenderness ratio is approximately 123.

Appendix 3

Moment of Inertia Program and Output

Appendix 3

```
      PROGRAM FOOT
      DIMENSION D(7),AI(7),AIT(200)
      DATA D/5.25,6.5,7.375,8.125,8.625,9.,9.125/
      WRITE (3,10)
   10 FORMAT (1H1,/////)
      B=.42
      DO 200 I=1,91
      AIT(I)=0.
      A=(I-1)*.01745
      DO 100 J=1,7
      SSIN=.5*(1.- COS (2*A))
      SCOS=.5*(1.+ COS (2*A))
      AI(J)=(B*D(J)*(B**2*SSIN+D(J)**2*SCOS))/12.
      AIT(I)=AIT(I)+AI(J)
C      WRITE (3,90) SSIN,SCOS,AI(J),AIT(I)
C  90  FORMAT ('SSIN,SCOS,AI,AIT= ',4F7.4)
  100 CONTINUE
      AIT(I)=AIT(I)*2
      K=I-1
      WRITE (3,101) K,AIT(I)
  101 FORMAT (10X,'MOMENT OF INERTIA FOR FLEXIBLE FOOT AT ANGLE OF ',I3,
     1' IS ',F7.3)
  200 CONTINUE
      STOP
      END
```

Appendix 3

Ray R. Weberg
11/3/86

MOMENT OF INERTIA FOR FLEXIBLE FOOT AT ANGLE OF 0 IS 244.108
MOMENT OF INERTIA FOR FLEXIBLE FOOT AT ANGLE OF 1 IS 244.034
MOMENT OF INERTIA FOR FLEXIBLE FOOT AT ANGLE OF 2 IS 243.811
MOMENT OF INERTIA FOR FLEXIBLE FOOT AT ANGLE OF 3 IS 243.441
MOMENT OF INERTIA FOR FLEXIBLE FOOT AT ANGLE OF 4 IS 242.924
MOMENT OF INERTIA FOR FLEXIBLE FOOT AT ANGLE OF 5 IS 242.259
MOMENT OF INERTIA FOR FLEXIBLE FOOT AT ANGLE OF 6 IS 241.449
MOMENT OF INERTIA FOR FLEXIBLE FOOT AT ANGLE OF 7 IS 240.494
MOMENT OF INERTIA FOR FLEXIBLE FOOT AT ANGLE OF 8 IS 239.394
MOMENT OF INERTIA FOR FLEXIBLE FOOT AT ANGLE OF 9 IS 238.153
MOMENT OF INERTIA FOR FLEXIBLE FOOT AT ANGLE OF 10 IS 236.770
MOMENT OF INERTIA FOR FLEXIBLE FOOT AT ANGLE OF 11 IS 235.248
MOMENT OF INERTIA FOR FLEXIBLE FOOT AT ANGLE OF 12 IS 233.588
MOMENT OF INERTIA FOR FLEXIBLE FOOT AT ANGLE OF 13 IS 231.794
MOMENT OF INERTIA FOR FLEXIBLE FOOT AT ANGLE OF 14 IS 229.865
MOMENT OF INERTIA FOR FLEXIBLE FOOT AT ANGLE OF 15 IS 227.806
MOMENT OF INERTIA FOR FLEXIBLE FOOT AT ANGLE OF 16 IS 225.619
MOMENT OF INERTIA FOR FLEXIBLE FOOT AT ANGLE OF 17 IS 223.306
MOMENT OF INERTIA FOR FLEXIBLE FOOT AT ANGLE OF 18 IS 220.870
MOMENT OF INERTIA FOR FLEXIBLE FOOT AT ANGLE OF 19 IS 218.314
MOMENT OF INERTIA FOR FLEXIBLE FOOT AT ANGLE OF 20 IS 215.641
MOMENT OF INERTIA FOR FLEXIBLE FOOT AT ANGLE OF 21 IS 212.854
MOMENT OF INERTIA FOR FLEXIBLE FOOT AT ANGLE OF 22 IS 209.958
MOMENT OF INERTIA FOR FLEXIBLE FOOT AT ANGLE OF 23 IS 206.955
MOMENT OF INERTIA FOR FLEXIBLE FOOT AT ANGLE OF 24 IS 203.848
MOMENT OF INERTIA FOR FLEXIBLE FOOT AT ANGLE OF 25 IS 200.643
MOMENT OF INERTIA FOR FLEXIBLE FOOT AT ANGLE OF 26 IS 197.342
MOMENT OF INERTIA FOR FLEXIBLE FOOT AT ANGLE OF 27 IS 193.950
MOMENT OF INERTIA FOR FLEXIBLE FOOT AT ANGLE OF 28 IS 190.471
MOMENT OF INERTIA FOR FLEXIBLE FOOT AT ANGLE OF 29 IS 186.909
MOMENT OF INERTIA FOR FLEXIBLE FOOT AT ANGLE OF 30 IS 183.268
MOMENT OF INERTIA FOR FLEXIBLE FOOT AT ANGLE OF 31 IS 179.554
MOMENT OF INERTIA FOR FLEXIBLE FOOT AT ANGLE OF 32 IS 175.769
MOMENT OF INERTIA FOR FLEXIBLE FOOT AT ANGLE OF 33 IS 171.920
MOMENT OF INERTIA FOR FLEXIBLE FOOT AT ANGLE OF 34 IS 168.010
MOMENT OF INERTIA FOR FLEXIBLE FOOT AT ANGLE OF 35 IS 164.045
MOMENT OF INERTIA FOR FLEXIBLE FOOT AT ANGLE OF 36 IS 160.028
MOMENT OF INERTIA FOR FLEXIBLE FOOT AT ANGLE OF 37 IS 155.967
MOMENT OF INERTIA FOR FLEXIBLE FOOT AT ANGLE OF 38 IS 151.864
MOMENT OF INERTIA FOR FLEXIBLE FOOT AT ANGLE OF 39 IS 147.725
MOMENT OF INERTIA FOR FLEXIBLE FOOT AT ANGLE OF 40 IS 143.555
MOMENT OF INERTIA FOR FLEXIBLE FOOT AT ANGLE OF 41 IS 139.360
MOMENT OF INERTIA FOR FLEXIBLE FOOT AT ANGLE OF 42 IS 135.144
MOMENT OF INERTIA FOR FLEXIBLE FOOT AT ANGLE OF 43 IS 130.912
MOMENT OF INERTIA FOR FLEXIBLE FOOT AT ANGLE OF 44 IS 126.671
MOMENT OF INERTIA FOR FLEXIBLE FOOT AT ANGLE OF 45 IS 122.423
MOMENT OF INERTIA FOR FLEXIBLE FOOT AT ANGLE OF 46 IS 118.176
MOMENT OF INERTIA FOR FLEXIBLE FOOT AT ANGLE OF 47 IS 113.934
MOMENT OF INERTIA FOR FLEXIBLE FOOT AT ANGLE OF 48 IS 109.702
MOMENT OF INERTIA FOR FLEXIBLE FOOT AT ANGLE OF 49 IS 105.486
MOMENT OF INERTIA FOR FLEXIBLE FOOT AT ANGLE OF 50 IS 101.290
MOMENT OF INERTIA FOR FLEXIBLE FOOT AT ANGLE OF 51 IS 97.120
MOMENT OF INERTIA FOR FLEXIBLE FOOT AT ANGLE OF 52 IS 92.981
MOMENT OF INERTIA FOR FLEXIBLE FOOT AT ANGLE OF 53 IS 88.877
MOMENT OF INERTIA FOR FLEXIBLE FOOT AT ANGLE OF 54 IS 84.815
MOMENT OF INERTIA FOR FLEXIBLE FOOT AT ANGLE OF 55 IS 80.798

Appendix 4

Braze Calculations

Appendix 3

MOMENT OF INERTIA FOR FLEXIBLE FOOT AT ANGLE OF 56 IS 76.832
MOMENT OF INERTIA FOR FLEXIBLE FOOT AT ANGLE OF 57 IS 72.921
MOMENT OF INERTIA FOR FLEXIBLE FOOT AT ANGLE OF 58 IS 69.070
MOMENT OF INERTIA FOR FLEXIBLE FOOT AT ANGLE OF 59 IS 65.285
MOMENT OF INERTIA FOR FLEXIBLE FOOT AT ANGLE OF 60 IS 61.569
MOMENT OF INERTIA FOR FLEXIBLE FOOT AT ANGLE OF 61 IS 57.927
MOMENT OF INERTIA FOR FLEXIBLE FOOT AT ANGLE OF 62 IS 54.363
MOMENT OF INERTIA FOR FLEXIBLE FOOT AT ANGLE OF 63 IS 50.883
MOMENT OF INERTIA FOR FLEXIBLE FOOT AT ANGLE OF 64 IS 47.489
MOMENT OF INERTIA FOR FLEXIBLE FOOT AT ANGLE OF 65 IS 44.187
MOMENT OF INERTIA FOR FLEXIBLE FOOT AT ANGLE OF 66 IS 40.980
MOMENT OF INERTIA FOR FLEXIBLE FOOT AT ANGLE OF 67 IS 37.872
MOMENT OF INERTIA FOR FLEXIBLE FOOT AT ANGLE OF 68 IS 34.867
MOMENT OF INERTIA FOR FLEXIBLE FOOT AT ANGLE OF 69 IS 31.968
MOMENT OF INERTIA FOR FLEXIBLE FOOT AT ANGLE OF 70 IS 29.180
MOMENT OF INERTIA FOR FLEXIBLE FOOT AT ANGLE OF 71 IS 26.505
MOMENT OF INERTIA FOR FLEXIBLE FOOT AT ANGLE OF 72 IS 23.947
MOMENT OF INERTIA FOR FLEXIBLE FOOT AT ANGLE OF 73 IS 21.509
MOMENT OF INERTIA FOR FLEXIBLE FOOT AT ANGLE OF 74 IS 19.194
MOMENT OF INERTIA FOR FLEXIBLE FOOT AT ANGLE OF 75 IS 17.004
MOMENT OF INERTIA FOR FLEXIBLE FOOT AT ANGLE OF 76 IS 14.943
MOMENT OF INERTIA FOR FLEXIBLE FOOT AT ANGLE OF 77 IS 13.013
MOMENT OF INERTIA FOR FLEXIBLE FOOT AT ANGLE OF 78 IS 11.216
MOMENT OF INERTIA FOR FLEXIBLE FOOT AT ANGLE OF 79 IS 9.554
MOMENT OF INERTIA FOR FLEXIBLE FOOT AT ANGLE OF 80 IS 8.029
MOMENT OF INERTIA FOR FLEXIBLE FOOT AT ANGLE OF 81 IS 6.644
MOMENT OF INERTIA FOR FLEXIBLE FOOT AT ANGLE OF 82 IS 5.400
MOMENT OF INERTIA FOR FLEXIBLE FOOT AT ANGLE OF 83 IS 4.299
MOMENT OF INERTIA FOR FLEXIBLE FOOT AT ANGLE OF 84 IS 3.341
MOMENT OF INERTIA FOR FLEXIBLE FOOT AT ANGLE OF 85 IS 2.528
MOMENT OF INERTIA FOR FLEXIBLE FOOT AT ANGLE OF 86 IS 1.861
MOMENT OF INERTIA FOR FLEXIBLE FOOT AT ANGLE OF 87 IS 1.341
MOMENT OF INERTIA FOR FLEXIBLE FOOT AT ANGLE OF 88 IS 0.968
MOMENT OF INERTIA FOR FLEXIBLE FOOT AT ANGLE OF 89 IS 0.743
MOMENT OF INERTIA FOR FLEXIBLE FOOT AT ANGLE OF 90 IS 0.667

Strength of Braze Joint

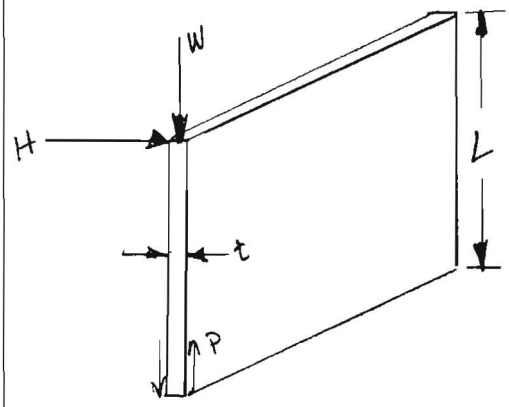

Thermal contraction moves each plate 0.225 inch

total downward force = 190,000 lbs over 45.36 in² total area

= 4188.7125 psi total

Smallest plate 5.25 × .42 = 2.205 in²

∴ $W_{smallest}$ = 9236.111

Largest Plate = 9.175 (.42) = 3.8325

$W_{largest}$ = 16053.241

looking @ the smallest plate

$I = \frac{1}{12}(5.25)(.42)^3 = .0324 \text{ in}^4$

$E' = 33E6$ psi for wide plates

$k = \left(\frac{w}{EI}\right)^{1/2} = .0929 \Rightarrow kl = 1.1153$

$y = .225 = \frac{-H}{kw}\left(2\tan\frac{kl}{2} - kl\right)$ R & Y table 10 case 5

$$H = \frac{.225(.0929)(9236.11)}{2\tan\left(\frac{1.1153}{2}\right) - 1.1153} = \underline{1161.88 \text{ lbs}}$$

Looking @ larger Plate

$I = \frac{1}{12}(9.125)(.42)^3 = .05634$

$k = .0929 \qquad kl = 1.1151$

$$H = \frac{.225(.0929)(16053.241)}{2\tan\left(\frac{1.1151}{2}\right) - 1.1151} = 2542.385$$

$= \underline{2542.385 \text{ lbs}}$

Largest Moment -

$$M_{max} = \frac{H}{k}\tan\frac{kl}{2}$$

R:4 Case 10 Table 10

$$= \frac{2542.385}{.0929}\tan\frac{1.1151}{2} = 17064.405 \text{ lb-in}$$

$Pt = M$

$P(.42) = 17064.405$

$P = 40629.535$

$$\sigma = P/A = \frac{40629.535}{.375(9.125)} = \underline{11,873.5 \text{ psi}}$$

F.S of 5.05 on Ultimate