# CRYOLAB ROTARY BAYONET

# COLD TEST DATA

D-ZERO ENGINEERING NOTE 3740.000-EN-44

UNIT NUMBER 1
BEFORE TEST
(CRYO ROTARY TEST)

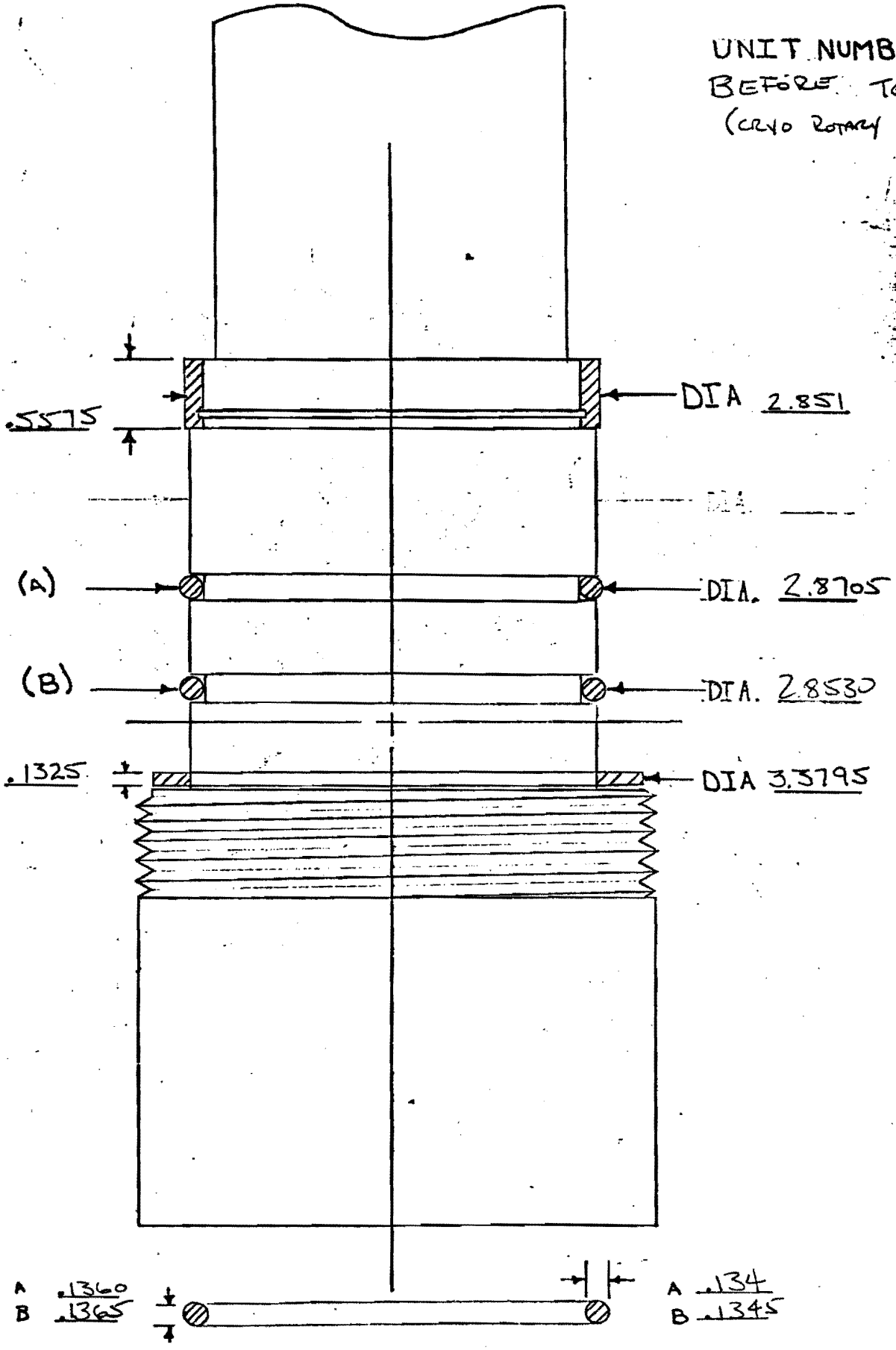

UNIT NUMBER 2
BEFORE TEST
(CRYO ROTARY TEST)

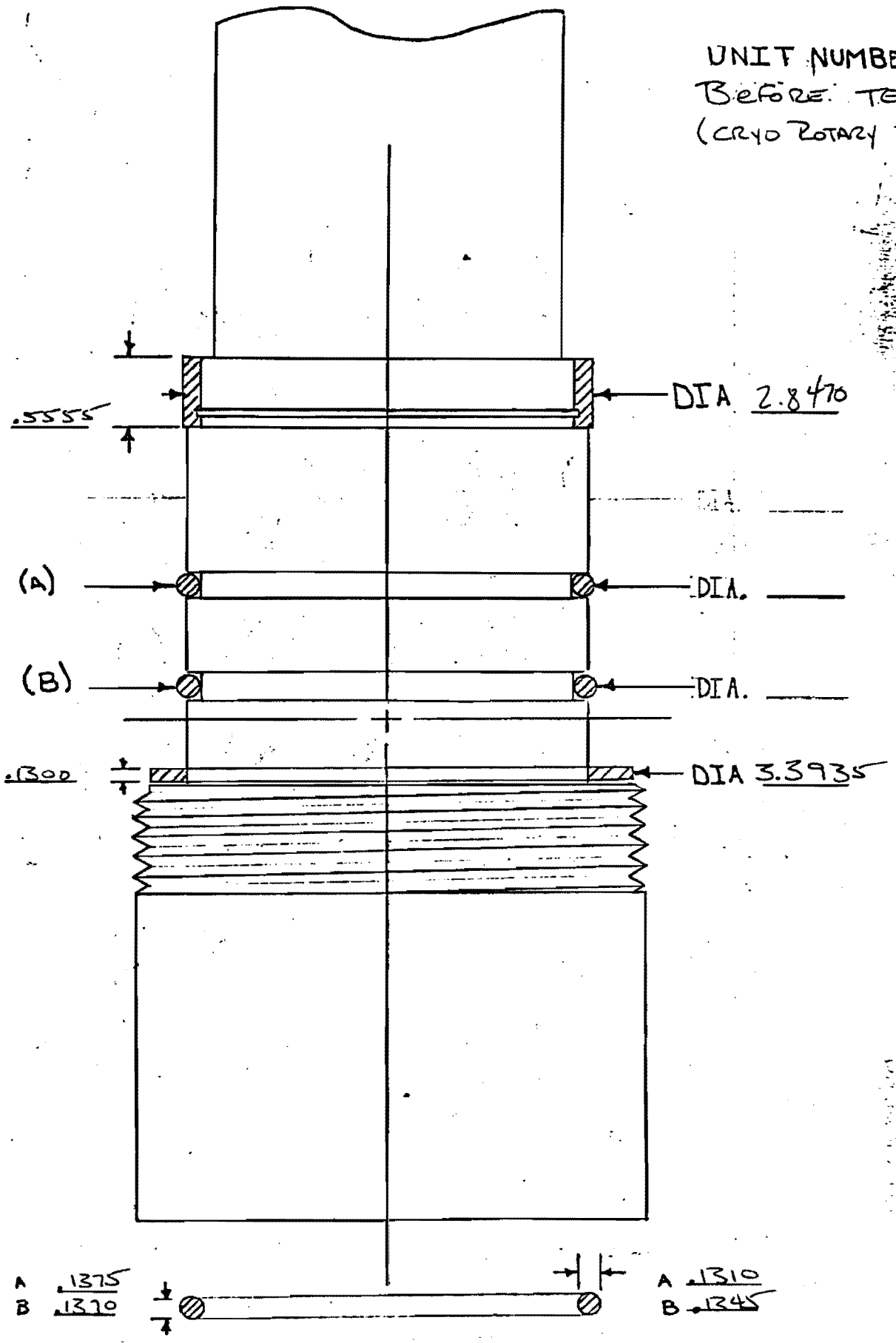

UNIT NUMBER 3
BEFORE TEST
(CRYO ROTARY TEST)

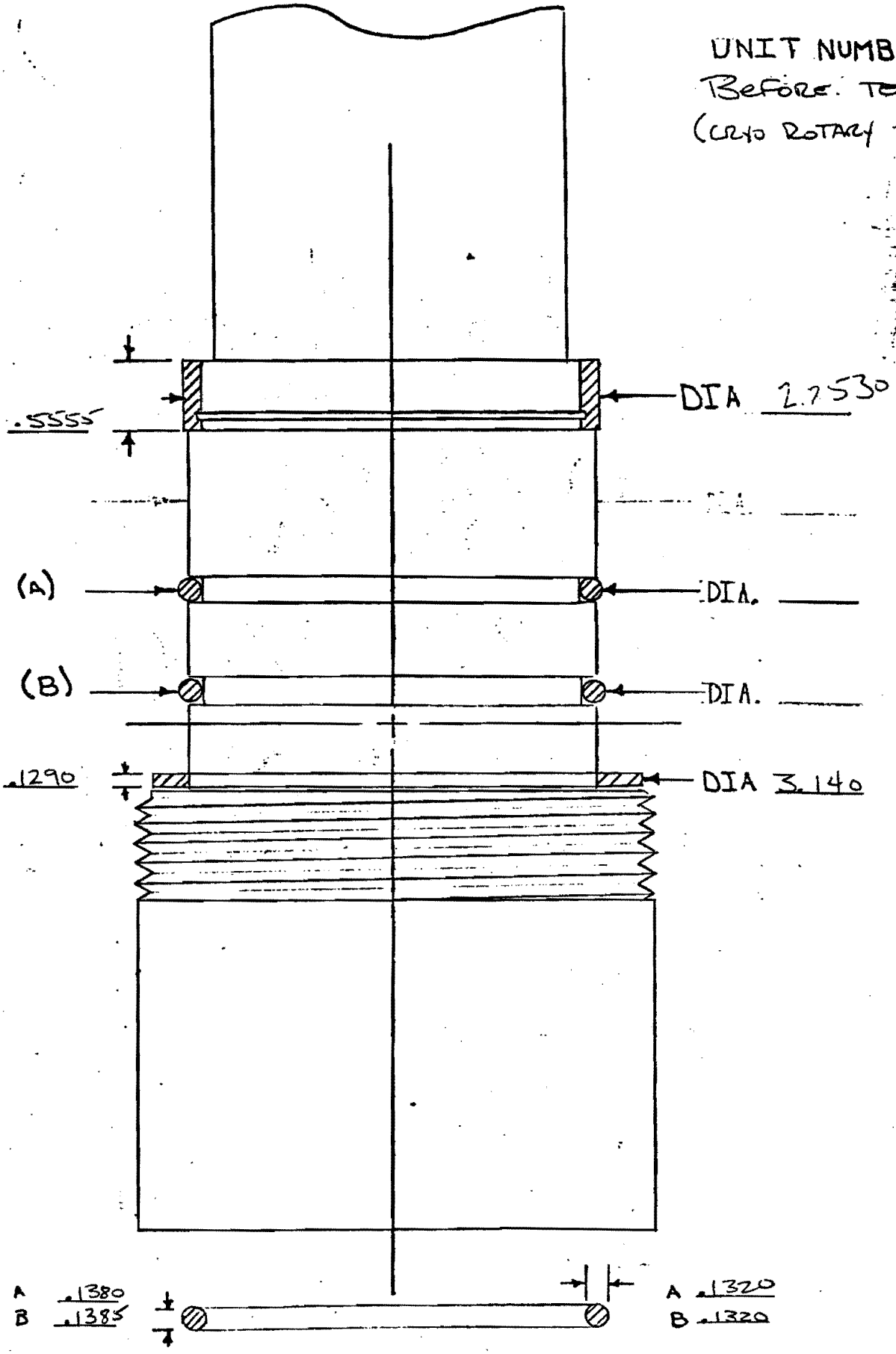

Cryolab bayonet test (no rotation except for leak test)

Leak check prior to first cool-down

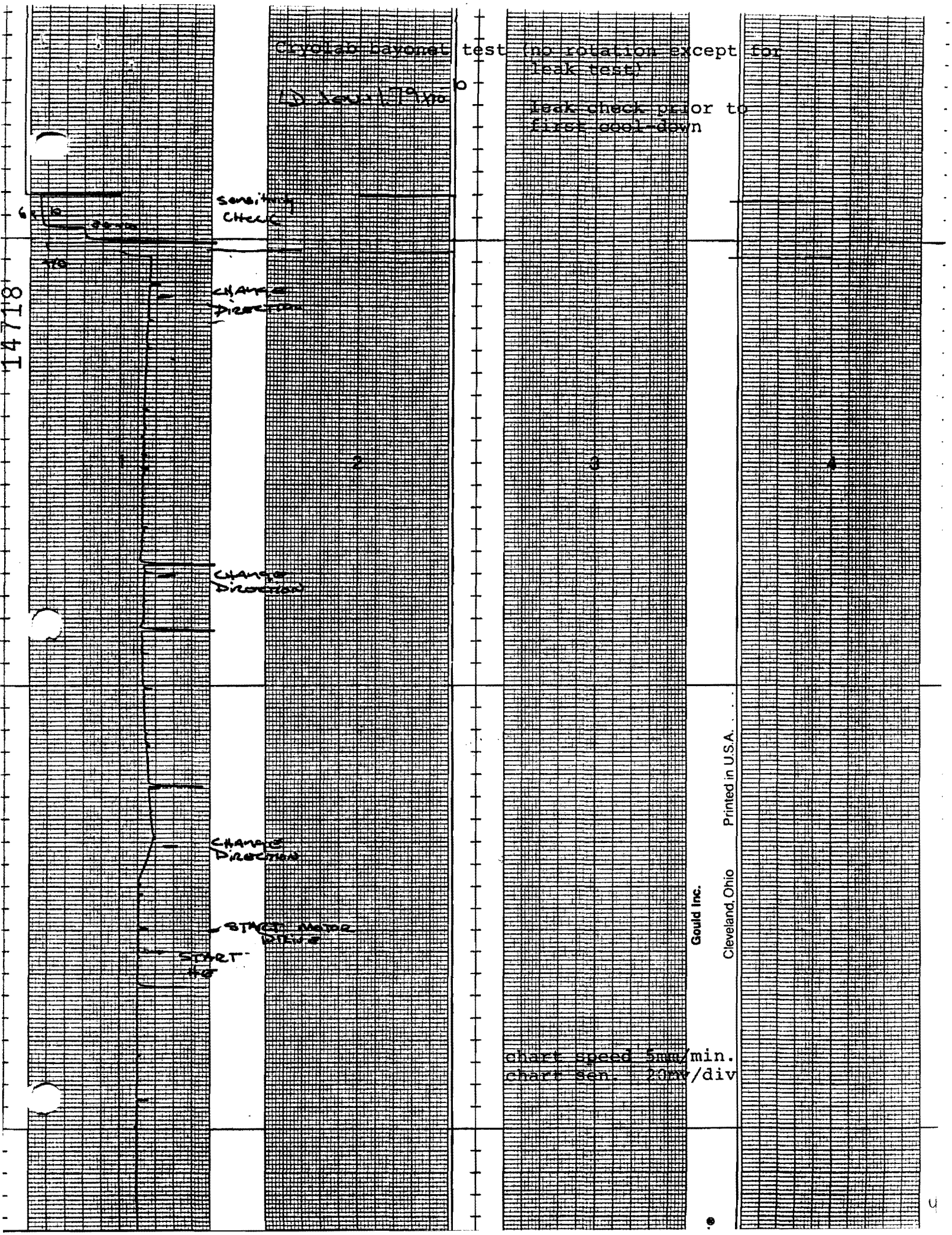


chart speed 5mm/min.
chart sen. 20mv/div

14718

Pure Rock

Grab Here

Start Here

Chart Speed = 5 mm/min

5 mm = 2 mm/div

Front Lock Check
Before Cryo Test
And Repositional Test

K+E 10 X 10 TO THE INCH • 7 X 10 INCHES
KEUFFEL & ESSER CO. MADE IN U.S.A.



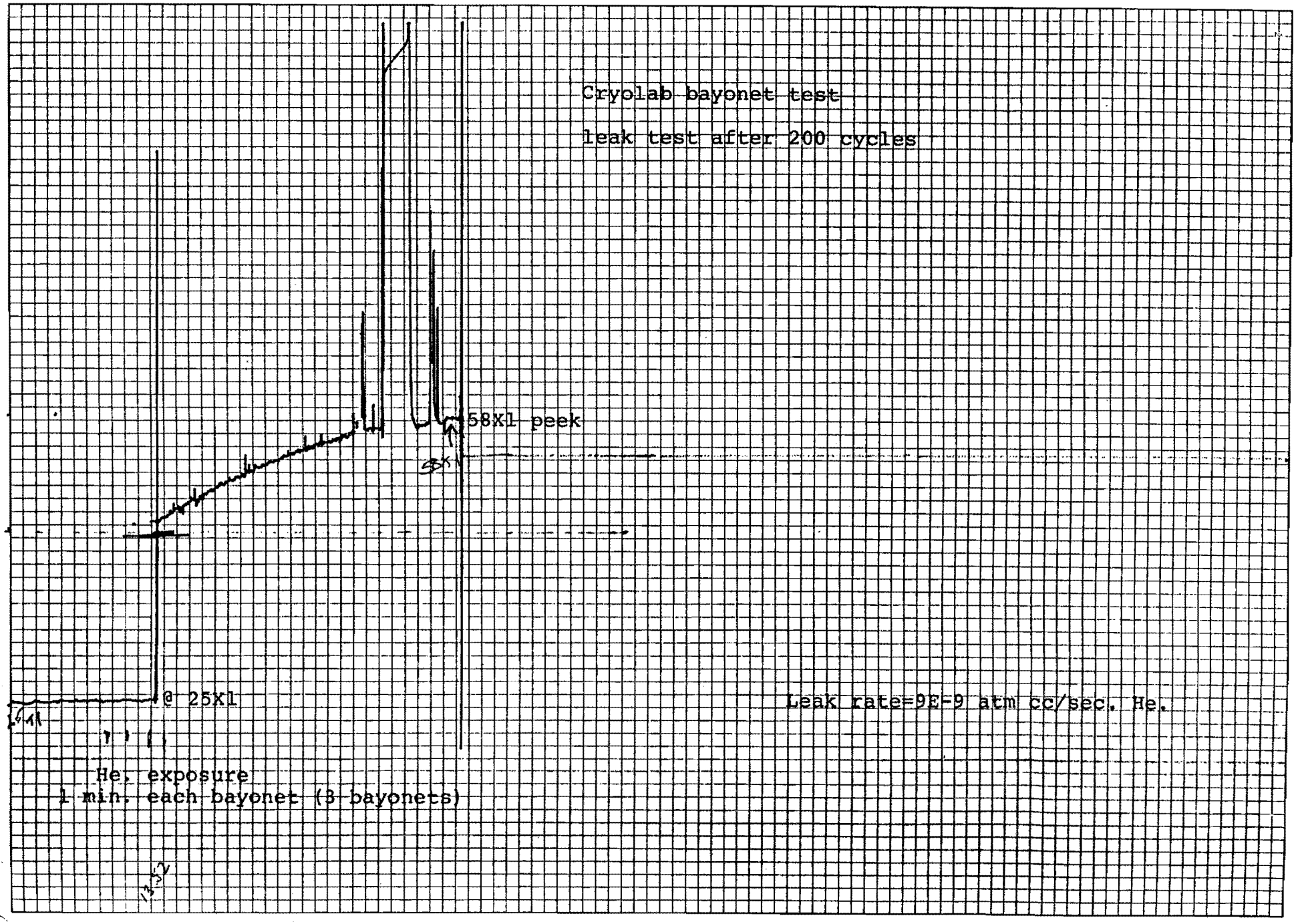

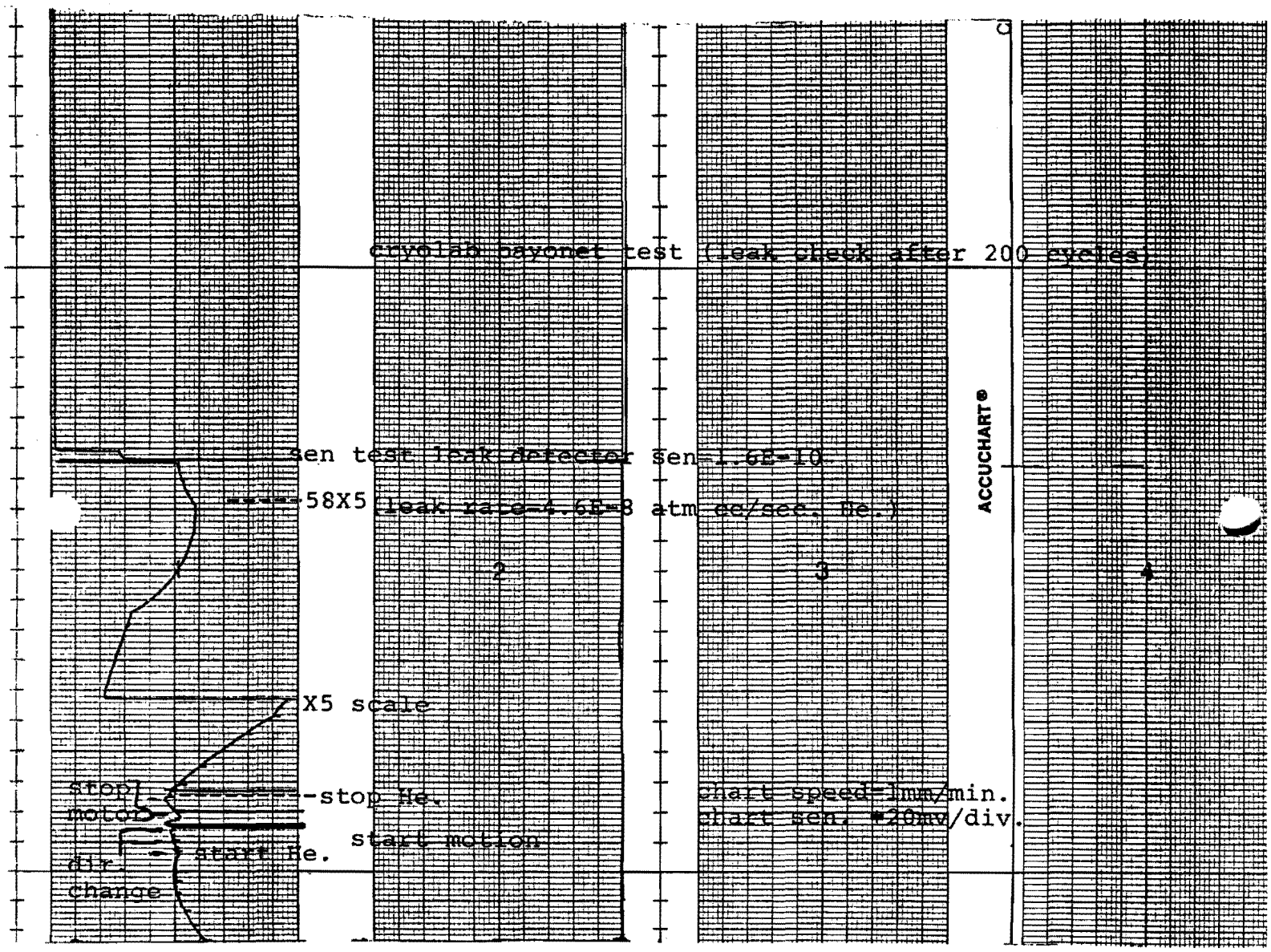
cryolab bayonet test (leak check after 200 cycles)
sen test leak detector sen=1.6E-10
58X5 (leak rate=4.6E-8 atm cc/sec. He.)
2
3
4
X5 scale
stop motor
stop He.
start motion
start He.
dir. change
chart speed=1mm/min.
chart sen. ±20mv/div.
ACCUCHART®

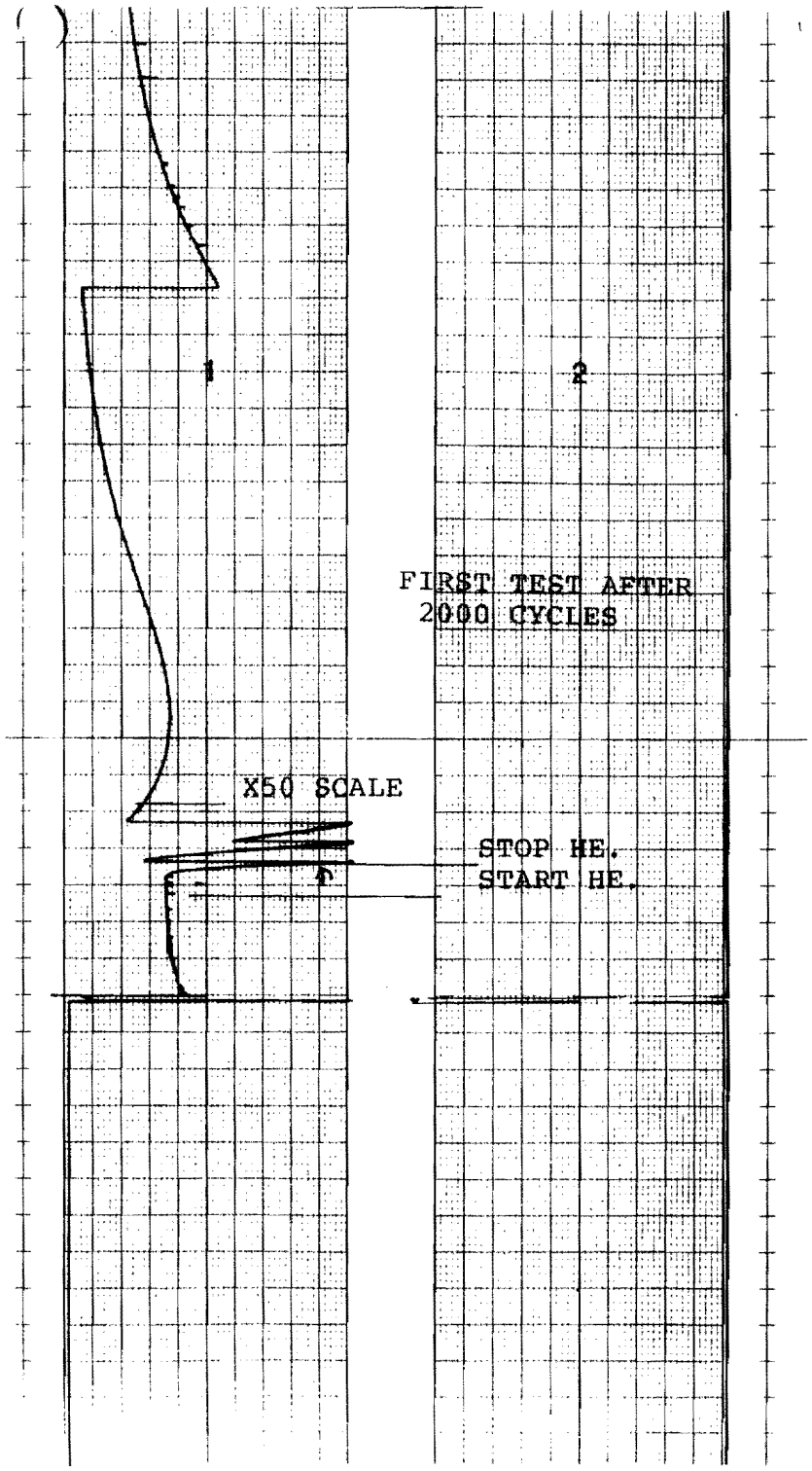
1
2
FIRST TEST AFTER
2000 CYCLES
X50 SCALE
STOP HE.
START HE.

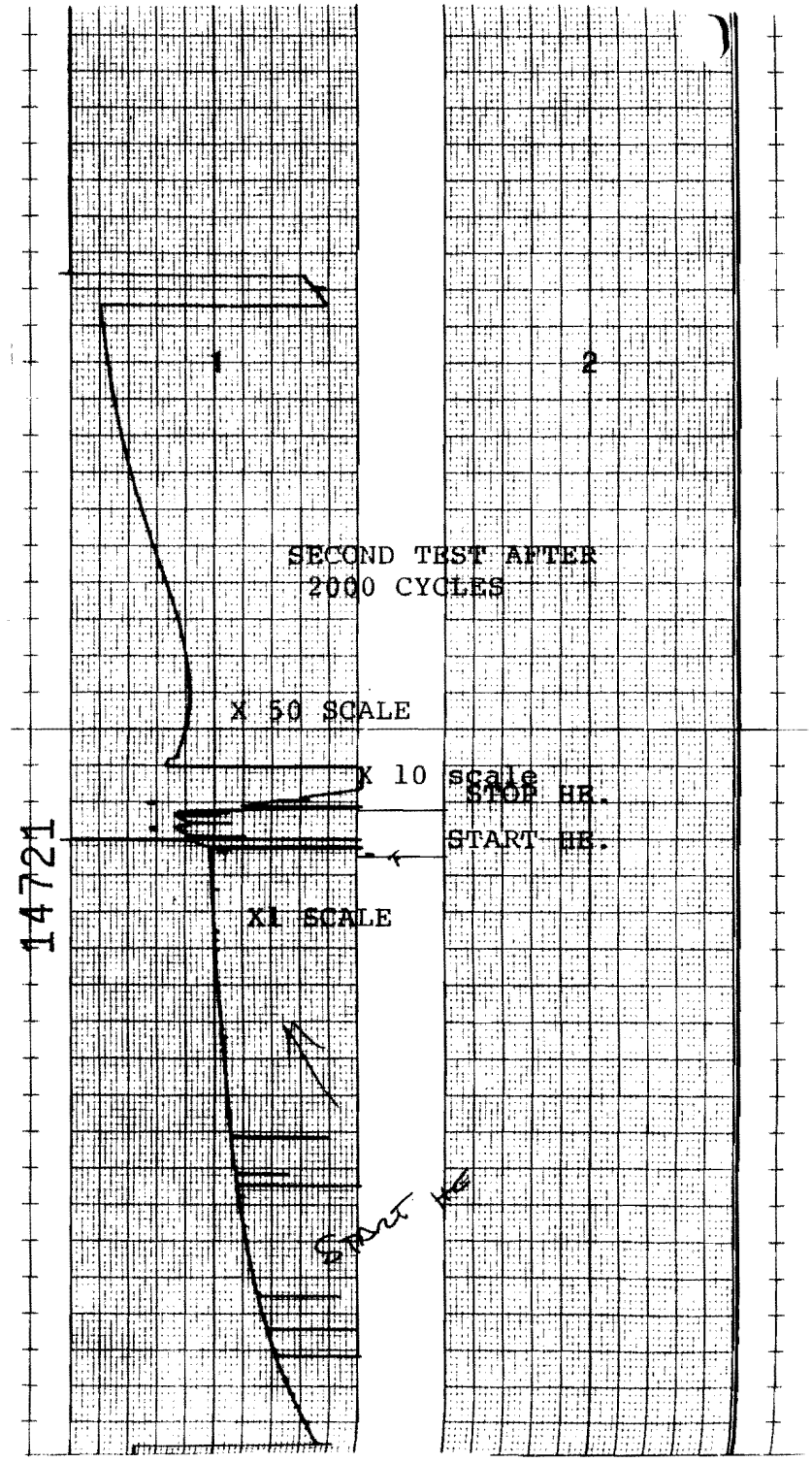
1
2
SECOND TEST AFTER
2000 CYCLES
X 50 SCALE
X 10 scale
STOP HR.
START HR.
X1 SCALE
Start HE
14721

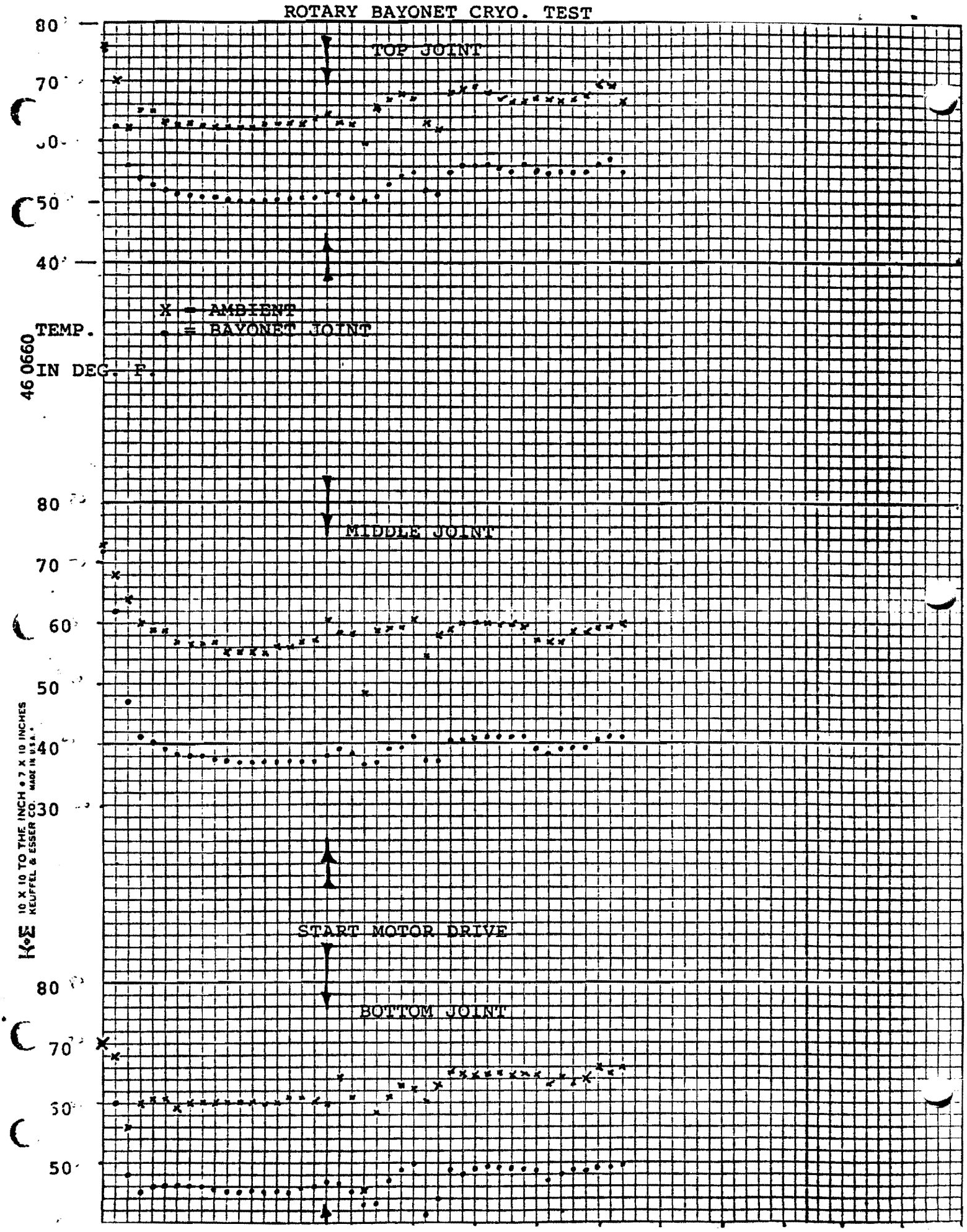
ROTARY BAYONET CRYO. TEST
TOP JOINT
X = AMBIENT
• = BAYONET JOINT
TEMP.
IN DEG. F.
MIDDLE JOINT
START MOTOR DRIVE
BOTTOM JOINT
80
70
60
50
40
30
46 0660
K+E 10 X 10 TO THE INCH • 7 X 10 INCHES
KEUFFEL & ESSER CO. MADE IN U.S.A.

UNIT NUMBER 2
MATE ID. 2.866

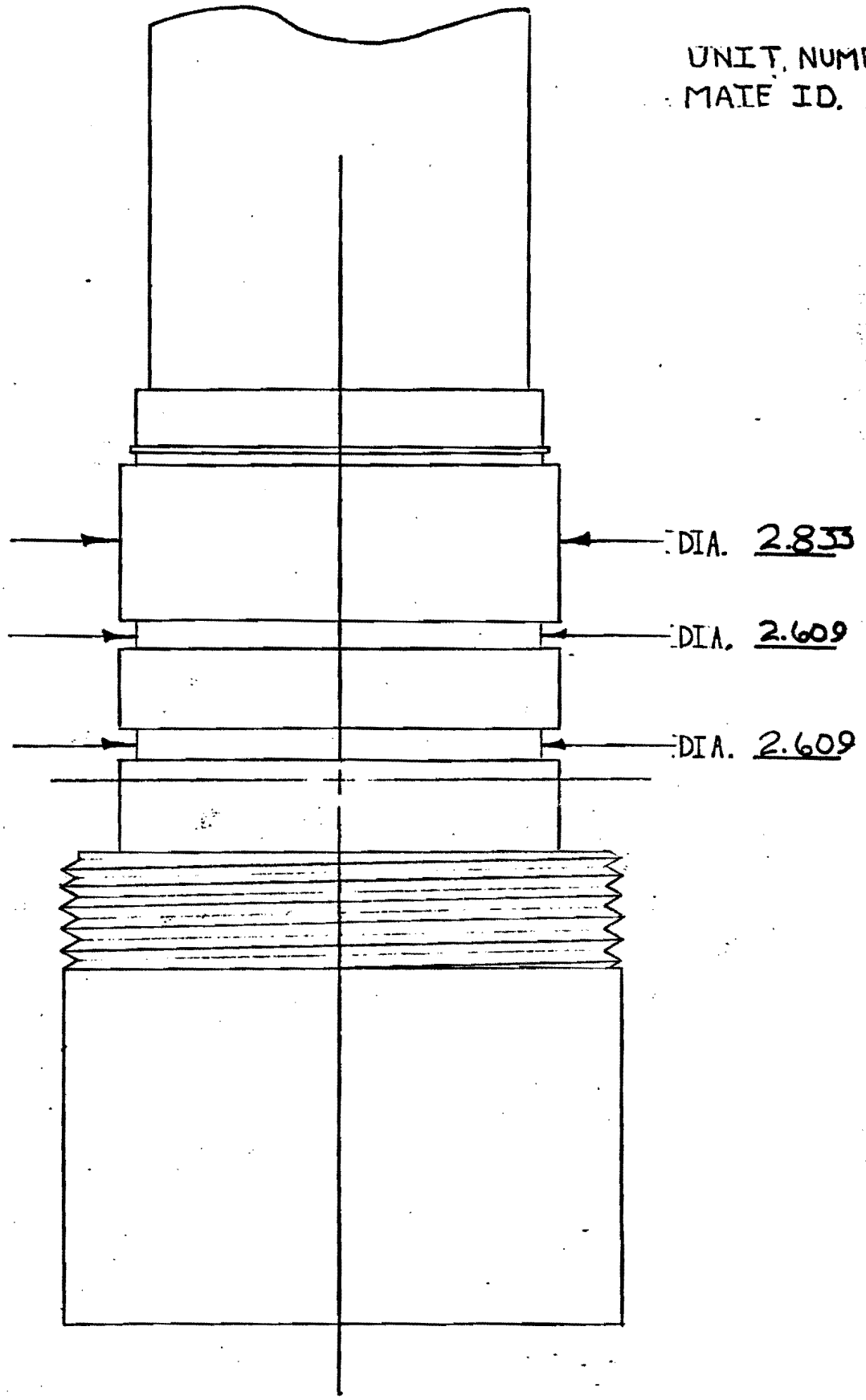

UNIT NUMBER
MATE ID. 2.867

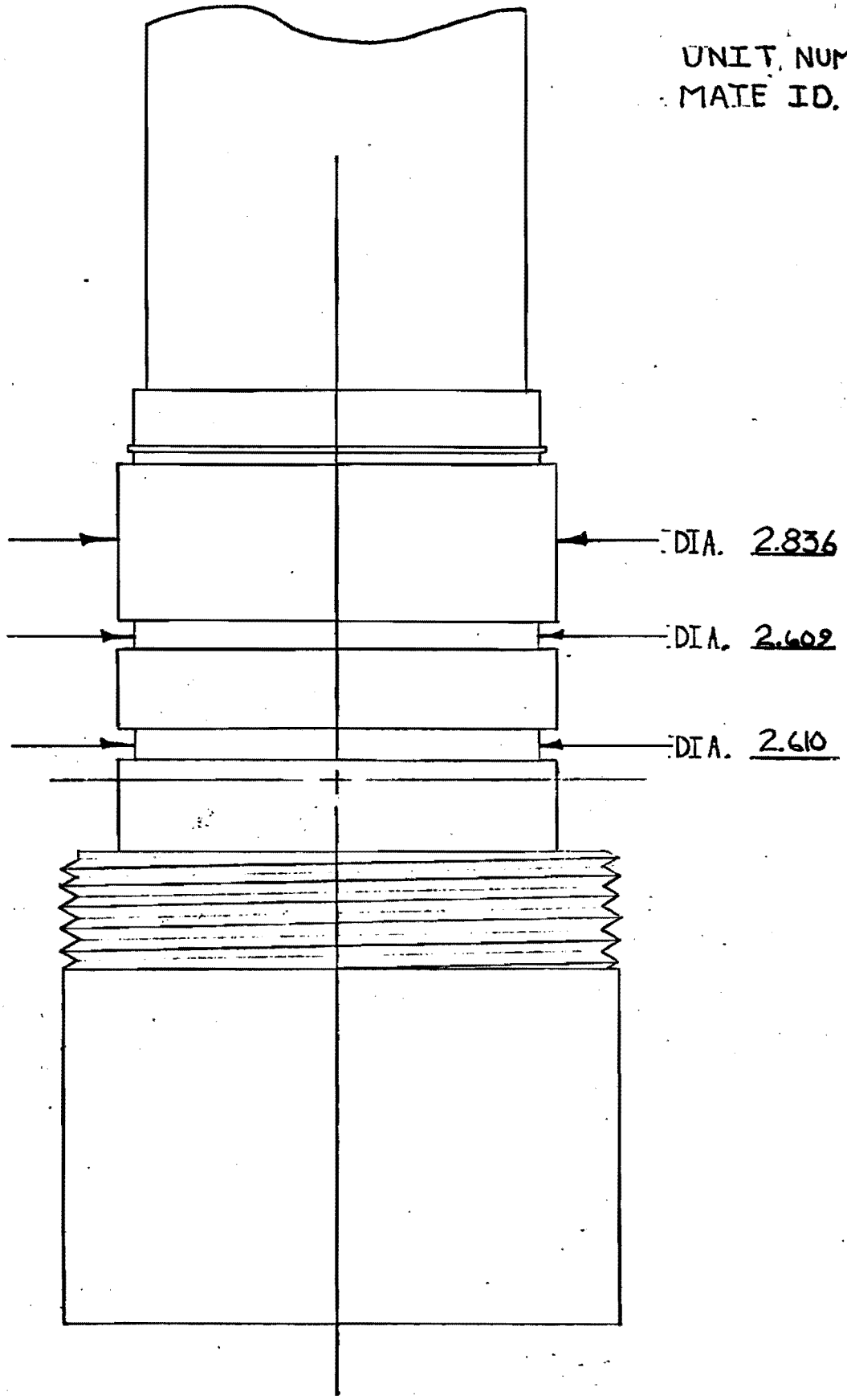

CRYOLAB ROTARY BAYONET TEST -COLD-

| 1 0225 | 01 | 02 | 03 | 04 | 05 | 06 | 07 | 08 | 09 | 10 | 11 | 12 | 13 | 14 | 15 | 16 |
|---|---|---|---|---|---|---|---|---|---|---|---|---|---|---|---|---|
| 100 | TOP BAYONET | | | | MIDDLE BAYONET | | | | BOTTOM BAYONET | | | | | | | |
| 200 | 0 DEG | 120 DEG | 240 DEG | | 0 DEG | 120 DEG | 240 DEG | | 0 DEG | 120 DEG | 240 DEG | | | | | |
| 300 | | | | AMBIENT | | | | AMBIENT | | | | AMBIENT | | | | |
| 400 | | | | | | | | | | | | | | | | |
| 13:09:00 | 75.0F | 77.5F | 74.8F | | 72.2F | 72.0F | 71.8F | | 69.7F | 69.5F | 69.3F | | | | | |
| | | | | 76.1F | | | | 73.2F | | | | 70.5F | | | | |
| 13:14:00 | 75.0F | 77.5F | 74.9F | | 72.2F | 72.0F | 71.8F | | 69.8F | 69.6F | 69.4F | | | | | |
| | | | | 76.2F | | | | 73.0F | | | | 70.5F | | | | |
| 13:19:00 | 75.1F | 77.7F | 75.0F | | 72.4F | 72.1F | 71.9F | | 69.9F | 69.6F | 69.5F | | | | | |
| | | | | 76.4F | | | | 73.1F | | | | 70.5F | | | | |
| 13:24:00 | 75.2F | 77.8F | 75.0F | | 72.5F | 72.2F | 72.0F | | 70.0F | 69.7F | 69.6F | | | | | |
| | | | | 76.3F | | | | 73.4F | | | | 70.5F | | | | |
| 13:29:00 | 75.3F | 78.0F | 75.1F | | 72.5F | 72.3F | 72.1F | | 70.0F | 69.8F | 69.7F | | | | | |
| | | | | 76.5F | | | | 73.5F | | | | 70.5F | | | | |
| 13:34:00 | 75.3F | 78.0F | 75.2F | | 72.6F | 72.4F | 72.1F | | 70.1F | 69.9F | 69.8F | | | | | |
| | | | | 76.3F | | | | 73.4F | | | | 70.5F | | | | |
| 13:39:00 | 75.3F | 78.3F | 75.2F | | 72.6F | 72.4F | 72.2F | | 70.2F | 69.9F | 69.8F | | | START COOL_DOWN | | |
| | | | | 76.5F | | | | 73.5F | | | | 70.7F | | | | |
| 13:42:29 | 75.3F | 78.1F | 75.1F | | 72.6F | 72.5F | 72.2F | | 70.2F | 70.0F | 69.8F | | | | | |
| | | | | 74.9F | | | | 73.5F | | | | 70.6F | | LIQUID STARTING TO FILL, TEST DEWAR | | |
| 13:44:00 | 75.2F | 78.4F | 75.2F | | 72.7F | 72.5F | 72.3F | | 70.2F | 69.9F | 69.9F | | | | | |
| | | | | 74.8F | | | | 73.1F | | | | 70.0F | | | | |
| 13:49:00 | 74.5F | 76.0F | 74.7F | | 73.0F | 72.8F | 72.5F | | 70.3F | 69.8F | 69.6F | | | | | |
| | | | | 73.2F | | | | 74.0F | | | | 69.2F | | | | |

CRYOLAB ROTARY BAYONET TEST -COLD-

| 0225 | 01 | 02 | 03 | 04 | 05 | 06 | 07 | 08 | 09 | 10 | 11 | 12 | 13 | 14 | 15 | 16 |
|---|---|---|---|---|---|---|---|---|---|---|---|---|---|---|---|---|
| 100 | TOP BAYONET | | | | MIDDLE BAYONET | | | | BOTTOM BAYONET | | | | | | | |
| 200 | 0 DEG | 120 DEG | 240 DEG | | 0 DEG | 120 DEG | 240 DEG | | 0 DEG | 120 DEG | 240 DEG | | | | | |
| 300 | | | | AMBIENT | | | | AMBIENT | | | | AMBIENT | | | | |
| 400 | | | | | | | | | | | | | | | | |
| 13:54:00 | 74.0F | 47.1F | 76.1F | | 75.8F | 75.0F | 74.0F | | 71.6F | 68.7F | 67.7F | | | | | -314.0F |
| | | | | 30.5F | | | | 76.9F | | | | 42.7F | | | | |
| 13:59:00 | 66.5F | 66.0F | 66.6F | | 71.9F | 71.9F | 71.5F | | 65.9F | 64.8F | 64.3F | | | | | -322.2F |
| | | | | 66.1F | | | | 72.4F | | | | 66.4F | | | | |
| 14:04:00 | 65.9F | 68.2F | 65.8F | | 70.2F | 70.6F | 70.2F | | 65.6F | 65.2F | 65.0F | | | | | -322.6F |
| | | | | 72.7F | | | | 71.9F | | | | 68.3F | | | | |
| 14:09:00 | 65.6F | 69.6F | 65.4F | | 69.0F | 69.6F | 69.0F | | 65.6F | 65.3F | 65.1F | | | | | -322.1F |
| | | | | 72.6F | | | | 72.2F | | | | 68.6F | | | | |
| 14:14:00 | 65.2F | 70.9F | 65.0F | | 67.9F | 68.4F | 67.8F | | 65.2F | 64.9F | 64.7F | | | | | -321.8F |
| | | | | 72.4F | | | | 71.9F | | | | 68.7F | | | | |
| 14:19:00 | 64.8F | 71.5F | 64.5F | | 66.7F | 67.3F | 66.6F | | 64.5F | 64.2F | 63.9F | | | | | -321.4F |
| | | | | 72.7F | | | | 71.6F | | | | 68.8F | | | | |
| 14:24:00 | 64.3F | 72.4F | 63.8F | | 65.6F | 66.2F | 65.4F | | 63.7F | 63.3F | 63.0F | | | | | -321.4F |
| | | | | 72.7F | | | | 71.2F | | | | 68.7F | | | | |
| 14:29:00 | 63.6F | 72.6F | 63.1F | | 64.5F | 65.1F | 64.3F | | 62.7F | 62.2F | 61.9F | | | | | -321.0F |
| | | | | 71.8F | | | | 70.8F | | | | 68.0F | | | | |
| 14:34:00 | 62.9F | 73.5F | 62.3F | | 63.4F | 64.0F | 63.2F | | 61.8F | 61.2F | 61.0F | | | | | -321.0F |
| | | | | 71.3F | | | | 70.6F | | | | 68.8F | | | | |
| 14:39:00 | 62.4F | 74.0F | 61.9F | | 62.1F | 62.8F | 62.0F | | 60.8F | 60.3F | 60.0F | | | | | -320.9F |
| | | | | 70.2F | | | | 68.7F | | | | 68.2F | | | | |

CRYOLAB ROTARY BAYONET TEST -COLD-

| 0225 | 01 | 02 | 03 | 04 | 05 | 06 | 07 | 08 | 09 | 10 | 11 | 12 | 13 | 14 | 15 | 16 |
|---|---|---|---|---|---|---|---|---|---|---|---|---|---|---|---|---|
| 100 | TOP BAYONET | | | | MIDDLE BAYONET | | | | BOTTOM BAYONET | | | | | | | |
| 200 | 0 DEG | 120 DEG | 240 DEG | | 0 DEG | 120 DEG | 240 DEG | | 0 DEG | 120 DEG | 240 DEG | | | | | INSIDE DEWAR |
| 300 | | | | AMBIENT | | | | AMBIENT | | | | AMBIENT | | | | |
| 400 | | | | | | | | | | | | | | | | |
| 14:44:00 | 61.7F | 74.4F | 61.5F | | 60.7F | 61.4F | 60.6F | | 59.9F | 59.3F | 59.1F | | | | | -320.6F |
| | | | | 69.7F | | | | 67.9F | | | | 67.4F | | | | |
| 14:49:00 | 60.9F | 74.3F | 60.9F | | 59.4F | 60.0F | 59.2F | | 59.0F | 58.4F | 58.1F | | | | | -320.3F |
| | | | | 69.0F | | | | 67.5F | | | | 67.2F | | | | |
| 14:54:00 | 60.5F | 74.9F | 60.3F | | 58.0F | 58.5F | 57.8F | | 58.1F | 57.5F | 57.2F | | | | | -320.4F |
| | | | | 69.3F | | | | 67.1F | | | | 67.3F | | | | |
| 14:59:00 | 60.1F | 59.9F | 60.0F | | 56.8F | 57.4F | 56.7F | | 57.4F | 56.8F | 56.4F | | | | | -320.1F |
| | | | | 69.2F | | | | 66.7F | | | | 67.0F | | | | |
| 15:04:00 | 59.7F | 59.5F | 59.6F | | 55.5F | 56.0F | 55.3F | | 56.6F | 56.1F | 55.7F | | | | | -320.3F |
| | | | | 68.7F | | | | 65.5F | | | | 66.4F | | | | |
| 15:09:00 | 59.3F | 59.1F | 59.2F | | 54.4F | 54.9F | 54.2F | | 56.1F | 55.5F | 55.1F | | | | | -320.0F |
| | | | | 68.0F | | | | 65.3F | | | | 66.0F | | | | |
| 15:14:00 | 58.9F | 58.6F | 58.7F | | 53.2F | 53.8F | 53.0F | | 55.3F | 54.7F | 54.4F | | | | | -320.2F |
| | | | | 68.6F | | | | 64.9F | | | | 65.4F | | | | |
| 15:19:00 | 58.8F | 58.6F | 58.6F | | 52.4F | 52.9F | 52.3F | | 54.9F | 54.4F | 54.0F | | | | | -319.6F |
| | | | | 67.6F | | | | 64.6F | | | | 65.2F | | | | |
| 15:24:00 | 57.9F | 57.6F | 57.5F | | 50.5F | 50.9F | 49.9F | | 52.2F | 51.8F | 50.1F | | | | | -316.6F |
| | | | | 57.8F | | | | 52.8F | | | | 44.6F | | | | |
| 15:29:00 | 56.9F | 56.8F | 56.5F | | 48.4F | 48.6F | 47.6F | | 49.5F | 49.1F | 47.2F | | | | | -316.5F |
| | | | | 60.6F | | | | 54.1F | | | | 46.7F | | | | |

FOUND THERMOCOUPLE WIRES TWISTED AT BACK OF TEMP RECORDER

CRYOLAB ROTARY BAYONET TEST -COLD-

| 0225 | 01 | 02 | 03 | 04 | 05 | 06 | 07 | 08 | 09 | 10 | 11 | 12 | 13 | 14 | 15 | 16 |
|---|---|---|---|---|---|---|---|---|---|---|---|---|---|---|---|---|
| 100 | TOP BAYONET | | | | MIDDLE BAYONET | | | | BOTTOM BAYONET | | | | | | | |
| 200 | 0 DEG | 120 DEG | 240 DEG | | 0 DEG | 120 DEG | 240 DEG | | 0 DEG | 120 DEG | 240 DEG | | | | | INSIDE |
| 300 | | | | AMBIENT | | | | AMBIENT | | | | AMBIENT | | | | DEWAR |
| 400 | | | | | | | | | | | | | | | | |
| 15:34:00 | 56.1F | 56.1F | 55.2F | | 47.0F | 47.7F | 46.4F | | 48.3F | 47.7F | 46.9F | | | | | -320.2F |
| | | | | 67.9F | | | | 63.5F | | | | 60.6F | | | | |
| 15:39:00 | 56.1F | 56.5F | 55.3F | | 46.9F | 47.4F | 46.1F | | 48.3F | 47.7F | 47.3F | | | | | -319.7F |
| | | | | 62.7F | | | | 64.0F | | | | 55.2F | | | | |
| 15:44:00 | 55.6F | 55.9F | 54.7F | | 46.2F | 47.0F | 45.7F | | 48.0F | 47.5F | 46.9F | | | | | -320.5F |
| | | | | 67.0F | | | | 63.1F | | | | 56.4F | | | | |
| 15:49:00 | 55.5F | 56.1F | 54.9F | | 45.4F | 46.1F | 45.1F | | 46.9F | 46.1F | 45.4F | | | | | -316.8F |
| | | | | 61.2F | | | | 53.0F | | | | 46.3F | | | | |
| 15:54:00 | 54.9F | 55.1F | 54.1F | | 43.9F | 44.6F | 43.7F | | 45.2F | 44.4F | 43.5F | | | | | -317.3F |
| | | | | 61.9F | | | | 52.2F | | | | 46.2F | | | | |
| 15:59:00 | 54.3F | 54.4F | 53.3F | | 42.8F | 43.9F | 42.5F | | 43.9F | 43.2F | 42.5F | | | | | -320.4F |
| | | | | 66.5F | | | | 62.2F | | | | 58.0F | | | | |
| 16:04:00 | 54.1F | 54.4F | 53.2F | | 42.8F | 43.8F | 42.4F | | 44.0F | 43.4F | 42.7F | | | | | -320.9F |
| | | | | 66.0F | | | | 61.6F | | | | 59.6F | | | | |
| 16:09:00 | 54.1F | 54.4F | 53.2F | | 42.9F | 43.6F | 42.5F | | 44.3F | 43.6F | 43.0F | | | | | -321.1F |
| | | | | 67.1F | | | | 63.1F | | | | 60.3F | | | | |
| 16:14:00 | 54.6F | 54.8F | 53.6F | | 43.0F | 43.8F | 42.6F | | 44.7F | 44.2F | 43.8F | | | | | -320.5F |
| | | | | 66.6F | | | | 62.5F | | | | 61.1F | | | | |
| 16:16:00 | 54.5F | 54.7F | 53.5F | | 42.9F | 43.8F | 42.5F | | 44.7F | 44.1F | 43.6F | | | | | -320.9F |
| | | | | 67.7F | | | | 62.3F | | | | 60.9F | | | | |

CRYOLAB ROTARY BAYONET TEST -COLD-

| 0225 | 01 | 02 | 03 | 04 | 05 | 06 | 07 | 08 | 09 | 10 | 11 | 12 | 13 | 14 | 15 | 16 |
|---|---|---|---|---|---|---|---|---|---|---|---|---|---|---|---|---|
| 100 | TOP BAYONET | | | | MIDDLE BAYONET | | | | BOTTOM BAYONET | | | | | | | |
| 200 | 0 DEG | 120 DEG | 240 DEG | | 0 DEG | 120 DEG | 240 DEG | | 0 DEG | 120 DEG | 240 DEG | | | | | INSIDE |
| 300 | | | | AMBIENT | | | | AMBIENT | | | | AMBIENT | | | | DEWAR |
| 400 | | | | | | | | | | | | | | | | |
| 16:30:00 | 54.0F | 53.5F | 53.3F | | 41.9F | 42.7F | 41.8F | | 44.8F | 44.1F | 43.7F | | | | | -320.7F |
| | | | | 65.1F | | | | 58.7F | | | | 59.7F | | | | |
| 16:45:00 | 53.8F | 53.2F | 53.2F | | 41.0F | 42.1F | 41.0F | | 45.2F | 44.7F | 44.2F | | | | | -320.6F |
| | | | | 65.9F | | | | 59.3F | | | | 60.1F | | | | |
| 17:00:00 | 53.6F | 53.1F | 53.1F | | 40.7F | 41.7F | 40.6F | | 45.7F | 45.0F | 44.6F | | | | | -320.2F |
| | | | | 65.4F | | | | 59.2F | | | | 60.7F | | | | |
| 17:15:00 | 53.5F | 52.9F | 52.8F | | 40.4F | 41.4F | 40.2F | | 45.8F | 45.1F | 44.7F | | | | | -320.4F |
| | | | | 65.9F | | | | 59.2F | | | | 60.7F | | | | |
| 17:30:00 | 53.3F | 52.6F | 52.7F | | 40.1F | 41.4F | 40.1F | | 46.0F | 45.4F | 45.0F | | | | | -320.3F |
| | | | | 65.0F | | | | 58.9F | | | | 60.8F | | | | |
| 17:45:00 | 52.9F | 52.5F | 52.6F | | 40.2F | 41.3F | 40.1F | | 46.2F | 45.5F | 45.2F | | | | | -319.7F |
| | | | | 64.2F | | | | 59.3F | | | | 60.5F | | | | |
| 18:00:00 | 52.6F | 52.1F | 52.1F | | 39.8F | 40.9F | 39.8F | | 46.1F | 45.3F | 45.0F | | | | | -320.1F |
| | | | | 63.6F | | | | 58.1F | | | | 60.8F | | | | |
| 18:15:00 | 52.3F | 51.7F | 51.9F | | 39.6F | 40.7F | 39.5F | | 46.1F | 45.4F | 45.0F | | | | | -320.1F |
| | | | | 63.5F | | | | 58.8F | | | | 60.3F | | | | |
| 18:30:00 | 52.1F | 52.1F | 52.1F | | 39.5F | 40.7F | 39.4F | | 46.3F | 45.8F | 45.3F | | | | | -319.5F |
| | | | | 63.5F | | | | 59.6F | | | | 61.0F | | | | |
| 18:45:00 | 52.1F | 51.7F | 51.7F | | 39.2F | 40.4F | 39.1F | | 46.0F | 45.4F | 44.9F | | | | | -320.2F |
| | | | | 63.9F | | | | 58.9F | | | | 60.5F | | | | |

CRYOLAB ROTARY BAYONET TEST -COLD-

| 0225 | 01 | 02 | 03 | 04 | 05 | 06 | 07 | 08 | 09 | 10 | 11 | 12 | 13 | 14 | 15 | 16 |
|---|---|---|---|---|---|---|---|---|---|---|---|---|---|---|---|---|
| 100 | TOP BAYONET | | | | MIDDLE BAYONET | | | | BOTTOM BAYONET | | | | | | | |
| 200 | 0 DEG | 120 DEG | 240 DEG | | 0 DEG | 120 DEG | 240 DEG | | 0 DEG | 120 DEG | 240 DEG | | | | | INSIDE |
| 300 | | | | AMBIENT | | | | AMBIENT | | | | AMBIENT | | | | DEWAR |
| 400 | | | | | | | | | | | | | | | | |
| 19:00:00 | 51.9F | 51.5F | 51.6F | | 38.9F | 40.0F | 38.8F | | 46.1F | 45.5F | 45.0F | | | | | -320.2F |
| | | | | 63.5F | | | | 58.0F | | | | 60.9F | | | | |
| 19:15:00 | 51.7F | 51.5F | 51.6F | | 38.9F | 40.0F | 38.8F | | 46.2F | 45.5F | 45.2F | | | | | -319.7F |
| | | | | 63.2F | | | | 57.6F | | | | 60.8F | | | | |
| 19:30:00 | 51.8F | 51.4F | 51.4F | | 38.5F | 39.5F | 38.5F | | 46.1F | 45.5F | 45.0F | | | | | -320.2F |
| | | | | 63.3F | | | | 57.4F | | | | 60.4F | | | | |
| 19:45:00 | 51.7F | 51.3F | 51.3F | | 38.4F | 39.4F | 38.4F | | 46.1F | 45.4F | 45.1F | | | | | -320.1F |
| | | | | 63.8F | | | | 56.9F | | | | 59.7F | | | | |
| 20:00:00 | 51.6F | 51.4F | 51.5F | | 38.3F | 39.3F | 38.3F | | 46.3F | 45.5F | 45.2F | | | | | -319.7F |
| | | | | 63.2F | | | | 57.0F | | | | 60.6F | | | | |
| 20:15:00 | 51.6F | 51.1F | 51.2F | | 38.1F | 39.1F | 38.1F | | 46.0F | 45.4F | 44.9F | | | | | -320.1F |
| | | | | 63.2F | | | | 57.2F | | | | 60.8F | | | | |
| 20:30:00 | 51.4F | 51.1F | 51.1F | | 37.9F | 39.0F | 37.9F | | 46.0F | 45.4F | 45.0F | | | | | -320.1F |
| | | | | 63.2F | | | | 57.2F | | | | 60.7F | | | | |
| 20:45:00 | 51.3F | 51.1F | 51.2F | | 38.1F | 39.0F | 38.0F | | 46.0F | 45.4F | 45.0F | | | | | -319.8F |
| | | | | 62.6F | | | | 57.4F | | | | 60.8F | | | | |
| 21:00:00 | 51.3F | 50.8F | 51.0F | | 37.8F | 38.7F | 37.8F | | 45.9F | 45.2F | 44.8F | | | | | -320.2F |
| | | | | 63.1F | | | | 57.0F | | | | 60.3F | | | | |
| 21:15:00 | 51.2F | 50.8F | 50.9F | | 37.7F | 38.7F | 37.7F | | 45.8F | 45.2F | 44.8F | | | | | -320.1F |
| | | | | 63.0F | | | | 57.5F | | | | 60.3F | | | | |

CRYOLAB ROTARY BAYONET TEST -COLD-

| 225 00 00 00 00 | 01 | 02 | 03 | 04 | 05 | 06 | 07 | 08 | 09 | 10 | 11 | 12 | 13 | 14 | 15 | 16 |
|---|---|---|---|---|---|---|---|---|---|---|---|---|---|---|---|---|
| | TOP BAYONET | | | | MIDDLE BAYONET | | | | BOTTOM BAYONET | | | | | | | |
| | 0 DEG | 120 DEG | 240 DEG | | 0 DEG | 120 DEG | 240 DEG | | 0 DEG | 120 DEG | 240 DEG | | | | | INSIDE DEWAR |
| | | | | AMBIENT | | | | AMBIENT | | | | AMBIENT | | | | |
| 1:30:00 | 51.0F | 51.0F | 51.0F | | 37.8F | 38.9F | 37.8F | | 45.9F | 45.2F | 44.9F | | | | | -319.6F |
| | | | | 62.3F | | | | 57.0F | | | | 60.5F | | | | |
| 1:45:00 | 51.2F | 50.8F | 50.8F | | 37.7F | 38.8F | 37.6F | | 45.7F | 45.0F | 44.6F | | | | | -320.1F |
| | | | | 62.9F | | | | 57.2F | | | | 60.0F | | | | |
| 2:00:00 | 51.1F | 50.7F | 50.7F | | 37.6F | 38.7F | 37.6F | | 45.7F | 45.0F | 44.6F | | | | | -320.1F |
| | | | | 63.0F | | | | 56.8F | | | | 60.0F | | | | |
| 2:15:00 | 50.8F | 50.8F | 50.6F | | 37.6F | 38.7F | 37.6F | | 45.8F | 45.1F | 44.7F | | | | | -319.8F |
| | | | | 61.8F | | | | 56.3F | | | | 60.0F | | | | |
| 2:30:00 | 50.8F | 50.4F | 50.4F | | 37.4F | 38.5F | 37.4F | | 45.5F | 44.8F | 44.4F | | | | | -320.2F |
| | | | | 62.4F | | | | 57.6F | | | | 60.0F | | | | |
| 2:45:00 | 50.6F | 50.3F | 50.3F | | 37.4F | 38.3F | 37.3F | | 45.5F | 44.7F | 44.4F | | | | | -320.2F |
| | | | | 62.2F | | | | 56.0F | | | | 59.3F | | | | |
| 3:00:00 | 50.5F | 50.4F | 50.5F | | 37.6F | 38.6F | 37.5F | | 45.5F | 44.8F | 44.4F | | | | | -319.7F |
| | | | | 61.8F | | | | 56.2F | | | | 60.0F | | | | |
| 3:15:00 | 50.6F | 50.3F | 50.3F | | 37.6F | 39.0F | 37.5F | | 45.3F | 44.8F | 44.2F | | | | | -320.3F |
| | | | | 62.5F | | | | 56.9F | | | | 60.1F | | | | |
| 3:30:00 | 50.5F | 50.2F | 50.2F | | 37.7F | 39.1F | 37.6F | | 45.3F | 44.9F | 44.2F | | | | | -320.2F |
| | | | | 62.4F | | | | 55.9F | | | | 60.4F | | | | |
| 3:45:00 | 50.4F | 50.4F | 50.3F | | 37.8F | 39.0F | 37.7F | | 45.3F | 44.8F | 44.3F | | | | | -320.0F |
| | | | | 62.3F | | | | 56.3F | | | | 59.9F | | | | |

CRYOLAB ROTARY BAYONET TEST -COLD-

| 0225 | 01 | 02 | 03 | 04 | 05 | 06 | 07 | 08 | 09 | 10 | 11 | 12 | 13 | 14 | 15 | 16 |
|---|---|---|---|---|---|---|---|---|---|---|---|---|---|---|---|---|
| 100 | TOP BAYONET | | | | MIDDLE BAYONET | | | | BOTTOM BAYONET | | | | | | | |
| 200 | 0 DEG | 120 DEG | 240 DEG | | 0 DEG | 120 DEG | 240 DEG | | 0 DEG | 120 DEG | 240 DEG | | | | | INSIDE |
| 300 | | | | AMBIENT | | | | AMBIENT | | | | AMBIENT | | | | DEWAR |
| 400 | | | | | | | | | | | | | | | | |
| 00:00:00 | 50.5F | 50.2F | 50.2F | | 37.6F | 39.0F | 37.6F | | 45.2F | 44.8F | 44.2F | | | | | -320.3F |
| | | | | 62.4F | | | | 57.1F | | | | 60.2F | | | | |
| 00:15:00 | 50.5F | 50.2F | 50.2F | | 37.6F | 38.9F | 37.6F | | 45.3F | 44.9F | 44.3F | | | | | -320.2F |
| | | | | 62.1F | | | | 56.3F | | | | 60.3F | | | | |
| 00:30:00 | 50.4F | 50.2F | 50.2F | | 37.6F | 38.7F | 37.5F | | 45.4F | 44.8F | 44.3F | | | | | -320.1F |
| | | | | 62.1F | | | | 55.5F | | | | 60.1F | | | | |
| 00:45:00 | 50.5F | 50.2F | 50.3F | | 37.3F | 38.6F | 37.3F | | 45.3F | 44.8F | 44.2F | | | | | -320.3F |
| | | | | 62.4F | | | | 55.8F | | | | 60.4F | | | | |
| 01:00:00 | 50.5F | 50.3F | 50.3F | | 37.3F | 38.7F | 37.3F | | 45.4F | 44.9F | 44.3F | | | | | -320.3F |
| | | | | 62.5F | | | | 56.0F | | | | 60.0F | | | | |
| 01:15:00 | 50.6F | 50.3F | 50.3F | | 37.4F | 38.8F | 37.4F | | 45.5F | 45.0F | 44.3F | | | | | -320.1F |
| | | | | 62.4F | | | | 56.5F | | | | 60.3F | | | | |
| 01:30:00 | 50.6F | 50.3F | 50.3F | | 37.3F | 38.4F | 37.3F | | 45.5F | 45.0F | 44.4F | | | | | -320.3F |
| | | | | 62.3F | | | | 55.8F | | | | 60.0F | | | | |
| 01:45:00 | 51.4F | 51.5F | 51.5F | | 37.7F | 38.7F | 37.6F | | 46.0F | 45.5F | 45.5F | | | | | -319.2F |
| | | | | 55.9F | | | | 56.7F | | | | 55.9F | | | | |
| 02:00:00 | 50.7F | 50.5F | 50.5F | | 37.4F | 38.6F | 37.4F | | 45.6F | 45.0F | 44.5F | | | | | -320.1F |
| | | | | 62.4F | | | | 56.7F | | | | 60.0F | | | | |
| 02:15:00 | 50.8F | 50.5F | 50.4F | | 37.2F | 38.4F | 37.2F | | 45.5F | 45.0F | 44.4F | | | | | -320.2F |
| | | | | 62.6F | | | | 55.8F | | | | 60.3F | | | | |

CRYOLAB ROTARY E NET TEST -COLD-

| 0226 | 01 | 02 | 03 | 04 | 05 | 06 | 07 | 08 | 09 | 10 | 11 | 12 | 13 | 14 | 15 | 16 |
|---|---|---|---|---|---|---|---|---|---|---|---|---|---|---|---|---|
| 100 | TOP BAYONET | | | | MIDDLE BAYONET | | | | BOTTOM BAYONET | | | | | | | |
| 200 | 0 DEG | 120 DEG | 240 DEG | | 0 DEG | 120 DEG | 240 DEG | | 0 DEG | 120 DEG | 240 DEG | | | | | INSIDE |
| 300 | | | | AMBIENT | | | | AMBIENT | | | | AMBIENT | | | | DEWAR |
| 400 | | | | | | | | | | | | | | | | |
| 02:30:00 | 50.7F | 50.4F | 50.4F | | 37.1F | 38.0F | 37.1F | | 45.5F | 45.0F | 44.5F | | | | | -320.4F |
| | | | | 63.0F | | | | 55.8F | | | | 59.8F | | | | |
| 02:45:00 | 50.7F | 50.5F | 50.5F | | 37.0F | 38.0F | 37.1F | | 45.6F | 44.9F | 44.5F | | | | | -320.2F |
| | | | | 62.6F | | | | 55.7F | | | | 59.8F | | | | |
| 03:00:00 | 50.8F | 50.5F | 50.4F | | 36.8F | 37.6F | 36.9F | | 45.5F | 44.9F | 44.5F | | | | | -320.5F |
| | | | | 62.9F | | | | 55.7F | | | | 59.5F | | | | |
| 03:15:00 | 50.8F | 50.6F | 50.5F | | 36.8F | 38.0F | 36.9F | | 45.5F | 45.0F | 44.5F | | | | | -320.4F |
| | | | | 62.6F | | | | 55.6F | | | | 60.5F | | | | |
| 03:30:00 | 50.8F | 50.6F | 50.6F | | 37.1F | 38.4F | 37.1F | | 45.7F | 45.2F | 44.6F | | | | | -320.2F |
| | | | | 62.7F | | | | 56.4F | | | | 60.1F | | | | |
| 03:45:00 | 51.0F | 50.7F | 50.6F | | 37.1F | 38.3F | 37.1F | | 45.5F | 45.1F | 44.4F | | | | | -320.5F |
| | | | | 63.3F | | | | 55.9F | | | | 60.4F | | | | |
| 04:00:00 | 50.9F | 50.5F | 50.5F | | 37.0F | 37.8F | 37.0F | | 45.7F | 45.1F | 44.6F | | | | | -320.5F |
| | | | | 62.8F | | | | 56.2F | | | | 60.3F | | | | |
| 04:15:00 | 50.8F | 50.7F | 50.7F | | 37.2F | 38.2F | 37.2F | | 46.0F | 45.4F | 44.8F | | | | | -319.9F |
| | | | | 61.6F | | | | 57.6F | | | | 60.4F | | | | |
| 04:30:00 | 51.0F | 50.8F | 50.7F | | 36.9F | 38.0F | 37.0F | | 45.7F | 45.2F | 44.6F | | | | | -320.5F |
| | | | | 63.3F | | | | 55.9F | | | | 61.0F | | | | |
| 04:45:00 | 51.1F | 50.7F | 50.7F | | 37.1F | 38.1F | 37.1F | | 45.8F | 45.3F | 44.7F | | | | | -320.4F |
| | | | | 63.3F | | | | 56.5F | | | | 60.3F | | | | |

CRYOLAB ROTARY BAYONET TEST -COLD-

| 0226 | 01 | 02 | 03 | 04 | 05 | 06 | 07 | 08 | 09 | 10 | 11 | 12 | 13 | 14 | 15 | 16 |
|---|---|---|---|---|---|---|---|---|---|---|---|---|---|---|---|---|
| 100 | TOP BAYONET | | | | MIDDLE BAYONET | | | | BOTTOM BAYONET | | | | | | | |
| 200 | 0 DEG | 120 DEG | 240 DEG | | 0 DEG | 120 DEG | 240 DEG | | 0 DEG | 120 DEG | 240 DEG | | | | | INSIDE |
| 300 | | | | AMBIENT | | | | AMBIENT | | | | AMBIENT | | | | DEWAR |
| 400 | | | | | | | | | | | | | | | | |
| 05:00:00 | 50.8F | 50.9F | 50.8F | | 37.4F | 38.3F | 37.5F | | 46.3F | 45.7F | 45.2F | | | | | -319.6F |
| | | | | 57.2F | | | | 56.9F | | | | 61.7F | | | | |
| 05:15:00 | 51.2F | 50.9F | 50.8F | | 37.1F | 38.0F | 37.2F | | 45.9F | 45.2F | 44.8F | | | | | -320.5F |
| | | | | 63.3F | | | | 56.9F | | | | 60.1F | | | | |
| 05:30:00 | 51.2F | 50.8F | 50.8F | | 37.1F | 37.9F | 37.1F | | 45.9F | 45.4F | 44.8F | | | | | -320.5F |
| | | | | 63.2F | | | | 56.7F | | | | 60.6F | | | | |
| 05:45:00 | 51.3F | 51.0F | 51.0F | | 37.2F | 37.9F | 37.2F | | 46.0F | 45.4F | 45.0F | | | | | -288.0F |
| | | | | 60.5F | | | | 57.2F | | | | 60.6F | | | | |
| 06:00:00 | 51.3F | 50.9F | 51.0F | | 37.1F | 38.0F | 37.1F | | 46.0F | 45.3F | 44.9F | | | | | -320.5F |
| | | | | 63.3F | | | | 56.8F | | | | 59.9F | | | | |
| 06:15:00 | 51.3F | 51.0F | 51.0F | | 37.1F | 38.0F | 37.2F | | 45.9F | 45.3F | 44.9F | | | | | -320.5F |
| | | | | 63.3F | | | | 56.5F | | | | 60.5F | | | | |
| 06:30:00 | 51.4F | 51.0F | 51.0F | | 37.1F | 37.9F | 37.2F | | 46.0F | 45.2F | 44.8F | | | | | -320.6F |
| | | | | 63.9F | | | | 56.7F | | | | 60.7F | | | | |
| 06:45:00 | 51.6F | 51.4F | 51.3F | | 37.4F | 38.3F | 37.3F | | 46.2F | 45.5F | 45.0F | | | | | -320.2F |
| | | | | 63.5F | | | | 56.9F | | | | 60.3F | | | | |
| 07:00:00 | 51.5F | 51.2F | 51.2F | | 37.3F | 38.2F | 37.4F | | 46.0F | 45.4F | 44.9F | | | | | -320.4F |
| | | | | 63.9F | | | | 56.9F | | | | 60.4F | | | | |
| 07:15:00 | 51.6F | 51.3F | 51.2F | | 37.4F | 38.2F | 37.5F | | 46.0F | 45.4F | 44.9F | | | | | 71.8F |
| | | | | 63.5F | | | | 57.1F | | | | 60.9F | | | | |

CRYOLAB ROTARY E NET TEST -COLD-

| 0226 | 01 | 02 | 03 | 04 | 05 | 06 | 07 | 08 | 09 | 10 | 11 | 12 | 13 | 14 | 15 | 16 |
|---|---|---|---|---|---|---|---|---|---|---|---|---|---|---|---|---|
| 100 | TOP BAYONET | | | | MIDDLE BAYONET | | | | BOTTOM BAYONET | | | | | | | |
| 200 | 0 DEG | 120 DEG | 240 DEG | | 0 DEG | 120 DEG | 240 DEG | | 0 DEG | 120 DEG | 240 DEG | | | | | INSIDE |
| 300 | | | | AMBIENT | | | | AMBIENT | | | | AMBIENT | | | | DEWAR |
| 400 | | | | | | | | | | | | | | | | |
| 07:30:00 | 52.2F | 52.0F | 51.9F | | 38.3F | 38.9F | 38.2F | | 46.6F | 46.0F | 45.5F | | | | | -319.2F |
| | | | | 58.7F | | | | 60.6F | | | | 59.2F | | | | |
| 07:45:00 | 51.6F | 51.3F | 51.4F | | 37.8F | 38.7F | 37.9F | | 46.3F | 45.5F | 45.2F | | | | | -320.1F |
| | | | | 63.4F | | | | 57.2F | | | | 60.9F | | | | |
| 08:00:00 | 51.7F | 51.4F | 51.5F | | 37.7F | 38.6F | 37.8F | | 46.2F | 45.5F | 45.1F | | | | | -303.5F |
| | | | | 63.6F | | | | 57.3F | | | | 60.6F | | | | |
| 08:09:22 | 51.7F | 51.4F | 51.5F | | 38.2F | 38.6F | 38.3F | | 46.8F | 46.5F | 47.4F | | | | ← START MOTOR DRIVE | -318.6F |
| | | | | 63.6F | | | | 58.3F | | | | 65.5F | | | | |
| 08:15:00 | 51.8F | 51.1F | 51.3F | | 38.3F | 39.1F | 38.5F | | 47.2F | 46.8F | 47.1F | | | | | -301.0F |
| | | | | 64.2F | | | | 56.5F | | | | 61.5F | | | | |
| 08:21:00 | 51.7F | 51.1F | 51.5F | | 39.0F | 39.1F | 39.0F | | 47.0F | 46.6F | 46.6F | | | | | -320.0F |
| | | | | 63.2F | | | | 58.0F | | | | 57.1F | | | | 0.1M |
| 08:34:11A | 51.7F | 51.3F | 51.5F | | 38.8F | 39.2F | 39.3F | | 47.2F | 47.2F | 47.9F | | | | | -319.7F |
| | | | | 63.6F | | | | 58.4F | | | | 64.3F | | | | 5043.0M* |
| 08:36:00 | 51.7F | 51.2F | 51.6F | | 38.8F | 39.2F | 39.3F | | 47.5F | 47.8F | 48.6F | | | | | -310.5F |
| | | | | 63.8F | | | | 57.3F | | | | 67.6F | | | | 0.0M |
| 08:51:00 | 52.0F | 51.9F | 51.7F | | 39.3F | 39.9F | 39.7F | | 46.8F | 46.4F | 45.6F | | | | | -297.6F |
| | | | | 63.6F | | | | 57.5F | | | | 59.8F | | | | 0.0M |
| 08:58:57A | 51.7F | 51.3F | 51.4F | | 39.1F | 39.4F | 39.8F | | 47.1F | 46.9F | 47.4F | | | | | -316.6F |
| | | | | 63.9F | | | | 57.2F | | | | 61.7F | | | | 5049.1M* |

CRYOLAB ROTARY BAYONET TEST -COLD-

| 0226 | 01 | 02 | 03 | 04 | 05 | 06 | 07 | 08 | 09 | 10 | 11 | 12 | 13 | 14 | 15 | 16 |
|---|---|---|---|---|---|---|---|---|---|---|---|---|---|---|---|---|
| 100 | TOP BAYONET | | | | MIDDLE BAYONET | | | | BOTTOM BAYONET | | | | | | | |
| 200 | 0 DEG | 120 DEG | 240 DEG | | 0 DEG | 120 DEG | 240 DEG | | 0 DEG | 120 DEG | 240 DEG | | | | | INSIDE |
| 300 | | | | AMBIENT | | | | AMBIENT | | | | AMBIENT | | | | DEWAR |
| 400 | | | | | | | | | | | | | | | | |
| 09:06:00 | 51.8F | 51.5F | 51.3F | | 38.7F | 39.3F | 38.5F | | 45.0F | 44.3F | 43.3F | | | | | -317.8F |
| | | | | 59.8F | | | | 53.6F | | | | 50.7F | | | | 0.0M |
| 09:21:00 | 51.3F | 50.7F | 51.1F | | 38.0F | 38.5F | 38.2F | | 44.4F | 44.1F | 43.5F | | | | | -320.1F |
| | | | | 65.4F | | | | 56.4F | | | | 62.4F | | | | 0.0M |
| 09:23:44A | 51.4F | 50.7F | 50.9F | | 38.0F | 38.3F | 38.4F | | 44.8F | 44.9F | 45.2F | | | | | -305.6F |
| | | | | 64.9F | | | | 56.8F | | | | 62.7F | | | | 5046.7M* |
| 09:36:00 | 51.3F | 50.5F | 50.8F | | 38.2F | 38.4F | 38.0F | | 45.4F | 45.2F | 44.6F | | | | | -301.1F |
| | | | | 63.5F | | | | 58.0F | | | | 61.0F | | | | 0.0M |
| 09:48:30A | 51.2F | 50.5F | 50.4F | | 38.1F | 38.6F | 38.0F | | 46.1F | 46.1F | 46.7F | | | | | -307.5F |
| | | | | 63.6F | | | | 57.3F | | | | 63.5F | | | | 5038.2M* |
| 09:51:00 | 51.1F | 50.4F | 50.4F | | 38.1F | 38.6F | 37.9F | | 46.5F | 46.6F | 47.6F | | | | | -302.2F |
| | | | | 63.3F | | | | 57.1F | | | | 67.1F | | | | 0.0M |
| 10:06:00 | 51.0F | 50.4F | 50.4F | | 38.1F | 38.6F | 38.0F | | 46.5F | 46.1F | 45.5F | | | | | -299.5F |
| | | | | 63.5F | | | | 57.2F | | | | 60.8F | | | | 0.0M |
| 10:13:18A | 51.0F | 50.4F | 50.2F | | 38.0F | 38.4F | 38.1F | | 46.9F | 46.9F | 47.4F | | | | | -307.2F |
| | | | | 63.9F | | | | 56.6F | | | | 63.0F | | | | 5043.2M* |
| 10:21:00 | 51.3F | 50.8F | 50.6F | | 38.3F | 38.9F | 38.2F | | 47.0F | 46.6F | 46.1F | | | | | -318.6F |
| | | | | 60.4F | | | | 51.8F | | | | 48.3F | | | | 0.0M |
| 10:36:00 | 50.2F | 50.2F | 49.3F | | 36.3F | 36.9F | 36.0F | | 42.7F | 42.2F | 41.3F | | | | | -319.0F |
| | | | | 59.0F | | | | 48.1F | | | | 45.1F | | | | 0.0M |

13

CRYOLAB ROTARY BAYONET TEST -COLD-

| 0226 | 01 | 02 | 03 | 04 | 05 | 06 | 07 | 08 | 09 | 10 | 11 | 12 | 13 | 14 | 15 | 16 |
|---|---|---|---|---|---|---|---|---|---|---|---|---|---|---|---|---|
| 100 | TOP BAYONET | | | | MIDDLE BAYONET | | | | BOTTOM BAYONET | | | | | | | |
| 200 | 0 DEG | 120 DEG | 240 DEG | | 0 DEG | 120 DEG | 240 DEG | | 0 DEG | 120 DEG | 240 DEG | | | | | INSIDE |
| 300 | | | | AMBIENT | | | | AMBIENT | | | | AMBIENT | | | | DEWAR |
| 400 | | | | | | | | | | | | | | | | |
| 10:38:03A | 49.9F | 50.0F | 49.0F | | 36.2F | 36.7F | 36.0F | | 42.3F | 41.7F | 41.0F | | | | | -308.5F |
| | | | | 55.1F | | | | 46.2F | | | | 43.1F | | | | 5009.3M* |
| 10:51:00 | 49.5F | 49.4F | 48.9F | | 35.6F | 36.1F | 35.3F | | 40.1F | 39.7F | 39.0F | | | | | -306.6F |
| | | | | 59.7F | | | | 54.5F | | | | 51.7F | | | | 0.0M |
| 11:02:51A | 49.6F | 49.2F | 49.0F | | 35.6F | 35.6F | 35.2F | | 40.6F | 40.5F | 41.2F | | | | | -311.6F |
| | | | | 63.2F | | | | 55.6F | | | | 59.1F | | | | 5016.6M* |
| 11:06:00 | 49.8F | 49.2F | 49.1F | | 35.6F | 35.8F | 35.2F | | 41.2F | 41.1F | 42.1F | | | | | -303.0F |
| | | | | 63.3F | | | | 55.5F | | | | 62.2F | | | | 0.0M |
| 11:21:00 | 50.6F | 50.9F | 50.3F | | 36.8F | 37.3F | 36.7F | | 41.8F | 41.4F | 41.2F | | | | | -296.4F |
| | | | | 60.6F | | | | 52.4F | | | | 46.2F | | | | 0.0M |
| 11:27:36A | 50.5F | 50.2F | 49.7F | | 36.2F | 36.5F | 36.0F | | 41.6F | 41.4F | 41.9F | | | | | -312.7F |
| | | | | 63.5F | | | | 55.7F | | | | 59.1F | | | | 5038.4M* |
| 11:36:00 | 51.4F | 50.5F | 50.6F | | 36.7F | 37.0F | 36.0F | | 42.6F | 42.3F | 41.9F | | | | | -320.6F |
| | | | | 66.5F | | | | 58.3F | | | | 58.1F | | | | 0.0M |
| 11:51:00 | 52.1F | 51.4F | 51.4F | | 37.3F | 37.4F | 37.0F | | 43.6F | 43.1F | 43.5F | | | | | -320.7F |
| | | | | 66.9F | | | | 58.2F | | | | 65.8F | | | | 0.0M |
| 11:52:24A | 52.3F | 51.4F | 51.4F | | 37.4F | 37.3F | 37.1F | | 43.9F | 43.9F | 44.3F | | | | | -317.4F |
| | | | | 66.7F | | | | 58.1F | | | | 62.6F | | | | 5043.9M* |
| 12:06:00 | 52.8F | 51.9F | 52.2F | | 37.9F | 37.9F | 37.3F | | 44.9F | 44.6F | 43.8F | | | | | -308.2F |
| | | | | 66.9F | | | | 58.2F | | | | 60.0F | | | | 0.0M |

CRYOLAB ROTARY BAYONET TEST -COLD-

| 0226 | 01 | 02 | 03 | 04 | 05 | 06 | 07 | 08 | 09 | 10 | 11 | 12 | 13 | 14 | 15 | 16 |
|---|---|---|---|---|---|---|---|---|---|---|---|---|---|---|---|---|
| 100 | TOP BAYONET | | | | MIDDLE BAYONET | | | | BOTTOM BAYONET | | | | | | | |
| 200 | 0 DEG | 120 DEG | 240 DEG | | 0 DEG | 120 DEG | 240 DEG | | 0 DEG | 120 DEG | 240 DEG | | | | | INSIDE DEWAR |
| 300 | | | | AMBIENT | | | | AMBIENT | | | | AMBIENT | | | | |
| 400 | | | | | | | | | | | | | | | | |
| 12:17:09A | 53.5F | 52.7F | 52.4F | | 38.4F | 38.3F | 38.1F | | 45.8F | 45.7F | 46.3F | | | | | -320.6F |
| | | | | 67.4F | | | | 59.0F | | | | 63.9F | | | | 5062.3M* |
| 12:21:00 | 53.6F | 52.7F | 52.6F | | 38.5F | 38.5F | 38.0F | | 46.3F | 46.1F | 46.7F | | | | | -305.6F |
| | | | | 67.3F | | | | 59.3F | | | | 64.5F | | | | 0.0M |
| 12:36:00 | 53.9F | 53.2F | 53.0F | | 39.0F | 39.4F | 38.7F | | 47.0F | 46.6F | 45.8F | | | | | -298.3F |
| | | | | 66.9F | | | | 59.1F | | | | 61.2F | | | | 0.1M |
| 12:41:57A | 54.1F | 53.4F | 53.1F | | 39.2F | 39.3F | 39.0F | | 47.4F | 47.2F | 47.7F | | | | | -320.2F |
| | | | | 67.6F | | | | 58.9F | | | | 65.3F | | | | 5054.5M* |
| 12:51:00 | 54.3F | 53.3F | 53.6F | | 39.6F | 39.5F | 38.8F | | 47.8F | 47.3F | 46.9F | | | | | -299.0F |
| | | | | 67.6F | | | | 59.8F | | | | 62.4F | | | | 0.0M |
| 13:06:00 | 54.2F | 53.6F | 53.3F | | 39.3F | 39.7F | 39.3F | | 48.1F | 47.5F | 48.2F | | | | | -320.1F |
| | | | | 66.0F | | | | 58.8F | | | | 67.5F | | | | 0.0M |
| 13:06:43A | 54.2F | 53.6F | 53.2F | | 39.3F | 39.6F | 39.3F | | 48.3F | 48.1F | 48.6F | | | | | -320.2F |
| | | | | 65.8F | | | | 58.5F | | | | 65.6F | | | | 5050.8M* |
| 13:21:00 | 54.0F | 53.3F | 53.2F | | 39.3F | 39.7F | 39.1F | | 48.4F | 48.0F | 47.2F | | | | | -308.0F |
| | | | | 65.7F | | | | 58.4F | | | | 63.5F | | | | 0.0M |
| 13:31:28A | 54.3F | 53.7F | 53.5F | | 39.4F | 39.9F | 39.6F | | 48.6F | 48.5F | 48.9F | | | | | -320.2F |
| | | | | 67.3F | | | | 58.5F | | | | 65.6F | | | | 5046.0M* |
| 13:36:00 | 54.5F | 53.6F | 53.7F | | 39.5F | 40.0F | 39.3F | | 48.8F | 48.6F | 48.5F | | | | | -309.0F |
| | | | | 67.9F | | | | 59.5F | | | | 63.2F | | | | 0.1M |

CRYOLAB ROTARY BAYONET TEST -COLD-

| 0226 | 01 | 02 | 03 | 04 | 05 | 06 | 07 | 08 | 09 | 10 | 11 | 12 | 13 | 14 | 15 | 16 |
|---|---|---|---|---|---|---|---|---|---|---|---|---|---|---|---|---|
| 100 | TOP BAYONET | | | | MIDDLE BAYONET | | | | BOTTOM BAYONET | | | | | | | |
| 200 | 0 DEG | 120 DEG | 240 DEG | | 0 DEG | 120 DEG | 240 DEG | | 0 DEG | 120 DEG | 240 DEG | | | | | INSIDE |
| 300 | | | | AMBIENT | | | | AMBIENT | | | | AMBIENT | | | | DEWAR |
| 400 | | | | | | | | | | | | | | | | |
| 13:51:00 | 54.9F | 54.3F | 54.1F | | 39.9F | 40.2F | 39.5F | | 48.7F | 48.6F | 47.7F | | | | | -302.8F |
| | | | | 67.7F | | | | 61.0F | | | | 63.9F | | | | 0.1M |
| 13:56:15A | 55.2F | 54.6F | 54.5F | | 40.0F | 40.3F | 40.0F | | 49.2F | 49.1F | 49.3F | | | | | -320.3F |
| | | | | 68.1F | | | | 60.2F | | | | 66.3F | | | | 5047.9M* |
| 14:06:00 | 55.2F | 54.4F | 54.6F | | 40.6F | 40.7F | 40.0F | | 49.4F | 49.1F | 48.4F | | | | | -298.3F |
| | | | | 67.9F | | | | 60.1F | | | | 63.9F | | | | 0.1M |
| 14:21:00 | 55.6F | 54.9F | 54.7F | | 41.0F | 41.1F | 40.8F | | 49.8F | 49.6F | 49.8F | | | | | -320.4F |
| | | | | 67.5F | | | | 59.7F | | | | 65.6F | | | | 5043.0M |
| 14:21:23A | 55.6F | 54.9F | 54.8F | | 41.0F | 41.1F | 40.9F | | 49.8F | 49.8F | 50.1F | | | | | -320.3F |
| | | | | 68.3F | | | | 62.2F | | | | 66.4F | | | | 0.0M* |
| 14:36:00 | 55.5F | 54.9F | 54.9F | | 41.3F | 41.5F | 40.8F | | 49.9F | 49.4F | 48.7F | | | | | -314.6F |
| | | | | 67.2F | | | | 60.7F | | | | 62.1F | | | | 0.0M |
| 14:45:46A | 55.7F | 55.0F | 54.8F | | 41.2F | 41.6F | 41.0F | | 49.9F | 49.8F | 49.8F | | | | | -320.0F |
| | | | | 66.9F | | | | 60.9F | | | | 65.4F | | | | 5053.4M* |
| 14:51:00 | 55.5F | 54.6F | 54.7F | | 41.0F | 41.3F | 40.5F | | 50.0F | 49.7F | 49.3F | | | | | -306.1F |
| | | | | 67.9F | | | | 60.0F | | | | 61.9F | | | | 0.1M |
| 15:06:00 | 55.4F | 55.5F | 54.7F | | 41.3F | 42.1F | 41.2F | | 48.7F | 48.4F | 47.2F | | | | | -297.8F |
| | | | | 59.7F | | | | 52.6F | | | | 45.3F | | | | 0.1M |
| 15:10:32A | 55.4F | 55.3F | 54.5F | | 40.7F | 41.1F | 40.3F | | 46.9F | 46.4F | 45.3F | | | | | -317.6F |
| | | | | 60.3F | | | | 51.7F | | | | 47.9F | | | | 5016.1M* |

CRYOLAB ROTARY BAYONET TEST -COLD-

| 0226 | 01 | 02 | 03 | 04 | 05 | 06 | 07 | 08 | 09 | 10 | 11 | 12 | 13 | 14 | 15 | 16 |
|---|---|---|---|---|---|---|---|---|---|---|---|---|---|---|---|---|
| 100 | TOP BAYONET | | | | MIDDLE BAYONET | | | | BOTTOM BAYONET | | | | | | | |
| 200 | 0 DEG | 120 DEG | 240 DEG | | 0 DEG | 120 DEG | 240 DEG | | 0 DEG | 120 DEG | 240 DEG | | | | | INSIDE |
| 300 | | | | AMBIENT | | | | AMBIENT | | | | AMBIENT | | | | DEWAR |
| 400 | | | | | | | | | | | | | | | | |
| 15:21:00 | 53.8F | 53.7F | 53.2F | | 38.8F | 39.3F | 38.3F | | 43.5F | 43.1F | 42.1F | | | | | -298.5F |
| | | | | 60.0F | | | | 51.1F | | | | 45.5F | | | | 0.0M |
| 15:35:19A | 51.9F | 51.7F | 51.4F | | 37.3F | 37.4F | 36.9F | | 41.6F | 41.5F | 41.6F | | | | | -321.1F |
| | | | | 61.3F | | | | 54.1F | | | | 57.8F | | | | 5016.1M* |
| 15:36:00 | 51.9F | 51.6F | 51.4F | | 37.1F | 37.3F | 36.9F | | 41.7F | 41.8F | 42.1F | | | | | -321.3F |
| | | | | 63.8F | | | | 54.4F | | | | 60.3F | | | | 0.0M |
| 15:51:00 | 51.7F | 51.5F | 51.1F | | 37.1F | 37.1F | 36.5F | | 41.9F | 41.2F | 40.6F | | | | | -321.4F |
| | | | | 63.6F | | | | 56.6F | | | | 54.4F | | | | 0.0M |
| 16:00:05A | 51.7F | 51.6F | 51.0F | | 37.0F | 37.2F | 36.9F | | 42.6F | 42.4F | 43.1F | | | | | -284.0F |
| | | | | 62.7F | | | | 56.7F | | | | 61.8F | | | | 4775.7M* |
| 16:06:00 | 51.8F | 51.4F | 51.4F | | 37.2F | 37.7F | 36.9F | | 43.3F | 43.0F | 42.7F | | | | | -310.2F |
| | | | | 63.6F | | | | 56.1F | | | | 56.7F | | | | 0.0M |
| 16:21:00 | 51.7F | 51.6F | 50.9F | | 37.6F | 38.4F | 37.4F | | 43.9F | 43.5F | 42.7F | | | | | -304.8F |
| | | | | 62.5F | | | | 56.9F | | | | 57.1F | | | | 0.0M |
| 16:24:51A | 51.7F | 51.6F | 50.8F | | 37.8F | 38.1F | 37.6F | | 44.4F | 44.1F | 44.8F | | | | | -299.0F |
| | | | | 62.2F | | | | 57.9F | | | | 62.6F | | | | 5065.9M* |
| 18:45:56A | 55.5F | 54.9F | 54.6F | | 40.2F | 40.5F | 40.0F | | 48.8F | 48.3F | 49.2F | | | | | -315.0F |
| | | | | 68.2F | | | | 58.6F | | | | 65.6F | | | | 5037.2M* |
| 19:11:24A | 55.8F | 55.3F | 55.0F | | 40.1F | 40.9F | 40.0F | | 48.8F | 48.0F | 49.1F | | | | | -318.3F |
| | | | | 68.0F | | | | 6[illegible] F | | | | 64.5F | | | | 5039.2M* |

CRYOLAB ROTARY BAYONET TEST -COLD-

| 0226 | 01 | 02 | 03 | 04 | 05 | 06 | 07 | 08 | 09 | 10 | 11 | 12 | 13 | 14 | 15 | 16 |
|---|---|---|---|---|---|---|---|---|---|---|---|---|---|---|---|---|
| 100 | TOP BAYONET | | | | MIDDLE BAYONET | | | | BOTTOM BAYONET | | | | | | | |
| 200 | 0 DEG | 120 DEG | 240 DEG | | 0 DEG | 120 DEG | 240 DEG | | 0 DEG | 120 DEG | 240 DEG | | | | | INSIDE |
| 300 | | | | AMBIENT | | | | AMBIENT | | | | AMBIENT | | | | DEWAR |
| 400 | | | | | | | | | | | | | | | | |
| 19:36:53A | 56.0F | 55.5F | 55.2F | | 40.3F | 40.9F | 40.1F | | 48.8F | 48.1F | 49.0F | | | | | -313.5F |
| | | | | 68.6F | | | | 60.1F | | | | 64.7F | | | | 5044.6M* |
| 20:02:20A | 56.1F | 55.5F | 55.3F | | 40.5F | 41.2F | 40.4F | | 48.9F | 48.3F | 49.1F | | | | | -316.9F |
| | | | | 67.9F | | | | 60.6F | | | | 64.8F | | | | 5045.6M* |
| 20:27:49A | 56.1F | 55.6F | 55.2F | | 40.6F | 41.1F | 40.4F | | 49.0F | 48.3F | 49.1F | | | | | -317.5F |
| | | | | 67.9F | | | | 59.3F | | | | 64.5F | | | | 5041.9M* |
| 20:53:18A | 56.2F | 55.6F | 55.3F | | 40.5F | 41.2F | 40.4F | | 49.0F | 48.3F | 49.2F | | | | | -317.7F |
| | | | | 69.0F | | | | 60.3F | | | | 64.6F | | | | 5031.5M* |
| 21:18:46A | 56.4F | 55.9F | 55.6F | | 40.4F | 40.8F | 40.3F | | 49.0F | 48.3F | 49.2F | | | | | -320.1F |
| | | | | 69.1F | | | | 59.2F | | | | 64.7F | | | | 5025.6M* |
| 21:44:15A | 56.5F | 56.0F | 55.6F | | 40.5F | 41.1F | 40.3F | | 49.1F | 48.4F | 49.3F | | | | | -320.1F |
| | | | | 68.7F | | | | 60.5F | | | | 64.7F | | | | 5048.2M* |
| 22:09:42A | 56.3F | 55.9F | 55.5F | | 40.7F | 41.5F | 40.6F | | 49.2F | 48.7F | 49.3F | | | | | -319.8F |
| | | | | 68.4F | | | | 61.0F | | | | 64.9F | | | | 5027.6M* |
| 22:35:11A | 56.2F | 55.7F | 55.3F | | 41.0F | 41.8F | 40.9F | | 49.4F | 49.0F | 49.4F | | | | | -319.8F |
| | | | | 68.0F | | | | 60.7F | | | | 65.0F | | | | 5024.3M* |
| 23:00:39A | 55.9F | 55.5F | 55.2F | | 41.1F | 41.8F | 41.0F | | 49.3F | 48.8F | 49.3F | | | | | -320.0F |
| | | | | 67.6F | | | | 60.5F | | | | 64.6F | | | | 5043.6M* |
| 23:26:08A | 55.9F | 55.5F | 55.1F | | 41.1F | 41.8F | 40.9F | | 49.4F | 49.1F | 49.4F | | | | | -320.0F |
| | | | | 66.9F | | | | 59.8F | | | | 64.7F | | | | 5053.4M* |

CRYOLAB ROTARY BAYONET TEST -COLD-

| 0226 | 01 | 02 | 03 | 04 | 05 | 06 | 07 | | 09 | 10 | 11 | 12 | 13 | 14 | 15 | 16 |
|---|---|---|---|---|---|---|---|---|---|---|---|---|---|---|---|---|
| 100 | TOP BAYONET | | | | MIDDLE BAYONET | | | | BOTTOM BAYONET | | | | | | | |
| 200 | 0 DEG | 120 DEG | 240 DEG | | 0 DEG | 120 DEG | 240 DEG | | 0 DEG | 120 DEG | 240 DEG | | | | | INSIDE |
| 300 | | | | AMBIENT | | | | AMBIENT | | | | AMBIENT | | | | DEWAR |
| 400 | | | | | | | | | | | | | | | | |
| 23:51:37A | 55.9F | 55.5F | 55.1F | | 41.1F | 41.8F | 41.0F | | 49.5F | 49.0F | 49.4F | | | | | -319.8F |
| | | | | 66.8F | | | | 5[illegible]7F | | | | 64.6F | | | | 5046.1M* |
| 00:17:03A | 55.6F | 55.2F | 55.0F | | 41.1F | 41.6F | 40.9F | | 49.3F | 48.8F | 49.3F | | | | | -319.8F |
| | | | | 66.1F | | | | 5[illegible]4F | | | | 64.6F | | | | 5026.2M* |
| 00:42:32A | 55.7F | 55.2F | 55.0F | | 40.9F | 41.6F | 40.7F | | 49.3F | 48.7F | 49.3F | | | | | -319.8F |
| | | | | 66.4F | | | | 5[illegible]8F | | | | 64.6F | | | | 5042.6M* |
| 01:08:01A | 55.6F | 55.2F | 55.0F | | 40.6F | 41.1F | 40.4F | | 49.0F | 48.5F | 49.1F | | | | | -319.8F |
| | | | | 67.4F | | | | 5[illegible]0F | | | | 64.3F | | | | 5032.2M* |
| 01:33:28A | 55.8F | 55.2F | 55.1F | | 40.3F | 40.7F | 40.1F | | 48.9F | 48.3F | 49.1F | | | | | -320.0F |
| | | | | 67.2F | | | | 5[illegible]3F | | | | 64.4F | | | | 5047.2M* |
| -01:58:57A | 55.9F | 55.4F | 55.4F | | 40.1F | 40.6F | 39.9F | | 49.0F | 48.4F | 49.1F | | | | | -320.0F |
| | | | | 67.4F | | | | 5[illegible]3F | | | | 64.7F | | | | ~~5041.~~5M* |
| 02:24:25A | 55.9F | 55.3F | 55.3F | | 39.8F | 39.9F | 39.7F | | 49.0F | 48.4F | 49.1F | | | | | -319.9F |
| | | | | 68.1F | | | | 5[illegible]8F | | | | 65.0F | | | | 5031.5M* |
| 02:49:54A | 55.9F | 55.4F | 55.1F | | 39.6F | 39.9F | 39.4F | | 48.9F | 48.3F | 49.1F | | | | | -319.9F |
| | | | | 67.5F | | | | 5[illegible]9F | | | | 64.5F | | | | 5051.8M* |
| -03:15:21A | 55.7F | 55.2F | 55.0F | | 39.3F | 39.5F | 39.2F | | 48.8F | 48.3F | 49.0F | | | | | -320.0F |
| | | | | 67.7F | | | | 5[illegible]5F | | | | 64.4F | | | | 5048.2M* |
| 03:40:50A | 55.6F | 55.1F | 54.9F | | 39.2F | 39.2F | 39.1F | | 48.8F | 48.2F | 49.0F | | | | | -319.9F |
| | | | | 67.4F | | | | 5[illegible]4F | | | | 64.4F | | | | 5032.9M* |

19

CRYOLAB ROTARY E NET TEST -COLD-

| 0227 100 200 300 400 | 01 | 02 | 03 | 04 | 05 | 06 | 07 | 08 | 09 | 10 | 11 | 12 | 13 | 14 | 16 |
|---|---|---|---|---|---|---|---|---|---|---|---|---|---|---|---|
| | TOP BAYONET | | | | MIDDLE BAYONET | | | | BOTTOM BAYONET | | | | | | |
| | 0 DEG | 120 DEG | 240 DEG | AMBIENT | 0 DEG | 120 DEG | 240 DEG | AMBIENT | 0 DEG | 120 DEG | 240 DEG | AMBIENT | | | INSIDE DEWAR |
| 07:55:31A | 54.3F | 53.8F | 53.8F | | 38.2F | 38.1F | 38.2F | | 47.4F | 47.0F | 47.7F | | | | -319.7F |
| | | | | 65.2F | | | | 57.1F | | | | 63.2F | | | 5045.3M* |
| 08:20:58A | 54.4F | 54.0F | 54.0F | | 38.4F | 38.4F | 38.5F | | 47.4F | 47.1F | 48.0F | | | | -319.9F |
| | | | | 65.6F | | | | 58.2F | | | | 64.2F | | | 5042.7M* |
| 08:46:27A | 54.8F | 54.3F | 54.4F | | 39.1F | 39.1F | 39.2F | | 47.9F | 47.5F | 48.2F | | | | -319.8F |
| | | | | 66.5F | | | | 57.0F | | | | 64.1F | | | 5051.9M* |
| 09:11:55A | 55.2F | 54.7F | 54.7F | | 39.7F | 39.8F | 39.8F | | 48.3F | 47.9F | 48.7F | | | | -319.8F |
| | | | | 66.4F | | | | 59.4F | | | | 64.6F | | | 5066.4M* |
| 09:37:24A | 55.3F | 54.7F | 54.9F | | 39.6F | 39.8F | 39.8F | | 48.4F | 48.0F | 48.7F | | | | -319.8F |
| | | | | 65.4F | | | | 58.6F | | | | 63.6F | | | 5051.2M* |
| 10:02:51A | 55.3F | 54.8F | 55.0F | | 39.6F | 39.9F | 39.6F | | 48.3F | 47.8F | 48.6F | | | | -319.8F |
| | | | | 64.9F | | | | 57.6F | | | | 64.5F | | | 5044.1M* |
| 10:28:20A | 55.4F | 54.8F | 55.0F | | 39.3F | 39.5F | 39.3F | | 48.3F | 47.8F | 48.7F | | | | -319.6F |
| | | | | 63.9F | | | | 58.1F | | | | 63.9F | | | 5060.9M* |
| 10:53:48A | 55.5F | 55.0F | 55.1F | | 40.0F | 40.3F | 40.1F | | 48.7F | 48.3F | 49.3F | | | | -319.6F |
| | | | | 65.5F | | | | 59.4F | | | | 64.9F | | | 5043.9M* |
| 11:19:15A | 55.8F | 55.4F | 55.5F | | 40.4F | 40.6F | 40.4F | | 49.1F | 48.8F | 49.9F | | | | -320.0F |
| | | | | 66.6F | | | | 59.7F | | | | 66.1F | | | 5048.3M* |
| 11:44:44A | 56.0F | 55.5F | 55.5F | | 40.5F | 41.0F | 40.7F | | 49.2F | 48.9F | 49.8F | | | | -319.8F |
| | | | | 67.3F | | | | 58.8F | | | | 66.0F | | | 5029.1M* |

2

CRYOLAB ROTARY BAYONET TEST -COLD-

| 0227 | 01 | 02 | 03 | 04 | 05 | 06 | 07 | 08 | 09 | 10 | 11 | 12 | 13 | 14 | 15 | 16 |
|---|---|---|---|---|---|---|---|---|---|---|---|---|---|---|---|---|
| 100 | TOP BAYONET | | | | MIDDLE BAYONET | | | | BOTTOM BAYONET | | | | | | | |
| 200 | 0 DEG | 120 DEG | 240 DEG | | 0 DEG | 120 DEG | 240 DEG | | 0 DEG | 120 DEG | 240 DEG | | | | | INSIDE |
| 300 | | | | AMBIENT | | | | AMBIENT | | | | AMBIENT | | | | DEWAR |
| 400 | | | | | | | | | | | | | | | | |
| 12:10:13A | 55.8F | 55.4F | 55.2F | | 40.6F | 40.8F | 40.4F | | 49.5F | 48.9F | 49.7F | | | | | -319.7F |
| | | | | 66.6F | | | | 58.2F | | | | 64.8F | | | | 5038.3M* |
| 12:35:41A | 55.8F | 55.3F | 55.5F | | 40.4F | 40.6F | 40.3F | | 49.4F | 48.9F | 49.7F | | | | | -319.8F |
| | | | | 67.3F | | | | 59.3F | | | | 65.0F | | | | 5035.2M* |
| 13:01:10A | 55.8F | 55.2F | 55.3F | | 40.5F | 40.6F | 40.3F | | 49.3F | 48.8F | 49.6F | | | | | -319.9F |
| | | | | 66.7F | | | | 58.3F | | | | 64.9F | | | | 5030.3M* |
| 13:26:37A | 55.7F | 55.4F | 55.0F | | 40.8F | 41.2F | 40.7F | | 49.4F | 49.0F | 49.9F | | | | | -320.0F |
| | | | | 66.8F | | | | 59.5F | | | | 66.1F | | | | 5034.9M* |
| 13:52:06A | 55.8F | 55.4F | 55.0F | | 41.0F | 41.0F | 40.8F | | 49.4F | 49.1F | 50.2F | | | | | -224.5F |
| | | | | 67.2F | | | | 60.6F | | | | 66.3F | | | | 4772.8M* |
| 14:17:34A | 55.4F | 55.1F | 54.4F | | 41.1F | 41.1F | 40.9F | | 49.5F | 49.0F | 49.9F | | | | | -247.6F |
| | | | | 66.1F | | | | 59.7F | | | | 65.5F | | | | 4794.1M* |
| 14:43:01A | 55.5F | 55.1F | 54.4F | | 41.3F | 41.5F | 41.0F | | 49.7F | 49.2F | 50.1F | | | | | -251.8F |
| | | | | 68.5F | | | | 59.9F | | | | 66.2F | | | | 4788.3M* |
| 15:08:30A | 55.8F | 55.6F | 55.0F | | 41.5F | 41.8F | 41.3F | | 49.8F | 49.4F | 49.7F | | | | | -302.1F |
| | | | | 66.0F | | | | 60.6F | | | | 64.8F | | | | 5033.4M* |
| 15:33:59A | 55.3F | 54.9F | 54.3F | | 41.1F | 41.6F | 40.9F | | 48.9F | 48.2F | 48.5F | | | | | -300.6F |
| | | | | 65.4F | | | | 59.8F | | | | 64.2F | | | | 5052.0M* |
| 15:59:27A | 54.7F | 54.4F | 53.6F | | 41.1F | 41.3F | 40.7F | | 48.6F | 48.2F | 48.8F | | | | | -302.1F |
| | | | | 65.6F | | | | [illegible] | | | | 64.6F | | | | 5045.8M* |

CYCLE #70

CRYOLAB ROTARY BAYONET TEST -COLD-

| 0227 | 01 | 02 | 03 | 04 | 05 | 06 | 07 | 08 | 09 | 10 | 11 | 12 | 13 | 14 | 15 | 16 |
|---|---|---|---|---|---|---|---|---|---|---|---|---|---|---|---|---|
| 100 | TOP BAYONET | | | | MIDDLE BAYONET | | | | BOTTOM BAYONET | | | | | | | |
| 200 | 0 DEG | 120 DEG | 240 DEG | | 0 DEG | 120 DEG | 240 DEG | | 0 DEG | 120 DEG | 240 DEG | | | | | INSIDE |
| 300 | | | | AMBIENT | | | | AMBIENT | | | | AMBIENT | | | | DEWAR |
| 400 | | | | | | | | | | | | | | | | |
| 16:24:56A | 54.7F | 54.4F | 53.7F | | 40.6F | 41.0F | 40.4F | | 48.4F | 48.0F | 48.7F | | | | | -302.1F |
| | | | | 66.6F | | | | 59.5F | | | | 64.2F | | | | 5045.6M* |
| 16:50:23A | 54.4F | 54.3F | 53.4F | | 40.0F | 40.2F | 39.8F | | 48.2F | 47.7F | 48.5F | | | | | -303.4F |
| | | | | 66.9F | | | | 58.2F | | | | 63.5F | | | | 5029.1M* |
| 17:15:52A | 54.2F | 53.9F | 53.1F | | 39.7F | 39.8F | 39.4F | | 48.0F | 47.6F | 48.3F | | | | | -304.1F |
| | | | | 65.6F | | | | 57.3F | | | | 63.3F | | | | 5026.6M* |
| 17:41:20A | 54.0F | 53.7F | 52.7F | | 39.4F | 39.6F | 39.0F | | 47.7F | 47.3F | 47.9F | | | | | -304.1F |
| | | | | 66.0F | | | | 58.7F | | | | 62.9F | | | | 5053.4M* |
| 18:06:49A | 53.5F | 53.1F | 52.3F | | 39.1F | 39.2F | 38.7F | | 47.5F | 47.1F | 47.6F | | | | | -304.1F |
| | | | | 65.1F | | | | 57.5F | | | | 62.5F | | | | 5042.3M* |
| 18:32:18A | 52.7F | 52.4F | 51.5F | | 38.5F | 38.6F | 38.1F | | 46.9F | 46.5F | 47.1F | | | | | -306.7F |
| | | | | 64.1F | | | | 57.9F | | | | 62.0F | | | | 5032.0M* |
| 18:57:47A | 52.2F | 51.9F | 51.1F | | 38.2F | 38.5F | 37.9F | | 46.7F | 46.3F | 46.8F | | | | | -307.6F |
| | | | | 62.7F | | | | 56.3F | | | | 61.8F | | | | 5014.6M* |
| 19:23:15A | 51.6F | 51.4F | 50.6F | | 37.8F | 38.1F | 37.4F | | 46.2F | 45.8F | 46.3F | | | | | -308.3F |
| | | | | 62.9F | | | | 55.5F | | | | 61.3F | | | | 5033.7M* |
| 19:48:44A | 51.3F | 50.9F | 50.1F | | 37.5F | 37.7F | 37.0F | | 45.7F | 45.4F | 45.8F | | | | | -314.7F |
| | | | | 63.0F | | | | 56.8F | | | | 61.0F | | | | 5027.0M* |
| 20:14:13A | 50.9F | 50.4F | 49.7F | | 37.2F | 37.4F | 36.7F | | 45.5F | 45.2F | 45.5F | | | | | -319.7F |
| | | | | 62.9F | | | | 56.0F | | | | 60.7F | | | | 5014.5M* |

CRYOLAB ROTARY BAYONET TEST -COLD-

| 227 | 01 | 02 | 03 | 04 | 05 | 06 | 07 | 08 | 09 | 10 | 11 | 12 | 13 | 14 | 15 | 16 |
|---|---|---|---|---|---|---|---|---|---|---|---|---|---|---|---|---|
| 00 | TOP BAYONET | | | | MIDDLE BAYONET | | | | BOTTOM BAYONET | | | | | | | |
| 00 | 0 DEG | 120 DEG | 240 DEG | | 0 DEG | 120 DEG | 240 DEG | | 0 DEG | 120 DEG | 240 DEG | | | | | INSIDE |
| 00 | | | | AMBIENT | | | | AMBIENT | | | | AMBIENT | | | | DEWAR |
| 00 | | | | | | | | | | | | | | | | |
| 0:39:41A | 50.4F | 49.9F | 49.3F | | 36.7F | 36.9F | 36.2F | | 45.1F | 44.8F | 45.3F | | | | | -319.8F |
| | | | | 62.1F | | | | 54.8F | | | | 60.3F | | | | 5015.8M* |
| 1:05:10A | 50.1F | 49.6F | 49.0F | | 36.4F | 36.7F | 36.0F | | 44.8F | 44.5F | 45.1F | | | | | -319.7F |
| | | | | 62.2F | | | | 55.3F | | | | 60.0F | | | | 5021.9M* |
| 1:30:39A | 49.8F | 49.4F | 48.8F | | 36.2F | 36.3F | 35.7F | | 44.6F | 44.2F | 44.8F | | | | | -319.7F |
| | | | | 62.2F | | | | 55.7F | | | | 59.6F | | | | 5016.7M* |
| 1:56:07A | 49.6F | 49.1F | 48.6F | | 36.0F | 36.2F | 35.6F | | 44.4F | 44.2F | 44.4F | | | | | -319.6F |
| | | | | 60.9F | | | | 55.0F | | | | 59.0F | | | | 5026.6M* |
| 2:21:36A | 49.5F | 49.1F | 48.5F | | 35.9F | 36.1F | 35.4F | | 44.3F | 43.9F | 44.2F | | | | | -319.4F |
| | | | | 59.9F | | | | 54.9F | | | | 59.1F | | | | 5029.4M* |
| 2:47:05A | 49.3F | 48.7F | 48.1F | | 35.6F | 35.8F | 35.2F | | 44.1F | 43.7F | 44.1F | | | | | -319.5F |
| | | | | 59.6F | | | | 54.2F | | | | 58.6F | | | | 5034.9M* |
| 3:12:34A | 48.8F | 48.4F | 47.8F | | 35.2F | 35.3F | 34.8F | | 43.8F | 43.4F | 43.9F | | | | | -319.4F |
| | | | | 57.6F | | | | 54.4F | | | | 58.7F | | | | 5027.6M* |
| 3:38:02A | 48.6F | 48.1F | 47.6F | | 35.1F | 35.3F | 34.7F | | 43.6F | 43.1F | 43.8F | | | | | -319.3F |
| | | | | 57.1F | | | | 53.9F | | | | 58.4F | | | | 5032.8M* |
| 00:03:31A | 48.3F | 47.9F | 47.4F | | 34.8F | 34.9F | 34.4F | | 43.4F | 43.0F | 43.7F | | | | | -319.5F |
| | | | | 55.3F | | | | 53.7F | | | | 58.7F | | | | 5024.4M* |
| 00:29:00A | 48.2F | 47.7F | 47.2F | | 34.8F | 34.7F | 34.3F | | 43.3F | 42.9F | 43.6F | | | | | -319.5F |
| | | | | 55.0F | | | | 53.[illegible] | | | | 58.1F | | | | 5028.5M* |

CRYOLAB ROTARY BAYONET TEST -COLD-

| 0228 | 01 | 02 | 03 | 04 | 05 | 06 | 07 | 08 | 09 | 10 | 11 | 12 | 13 | 14 | 15 | 16 |
|---|---|---|---|---|---|---|---|---|---|---|---|---|---|---|---|---|
| 100 | TOP BAYONET | | | | MIDDLE BAYONET | | | | BOTTOM BAYONET | | | | | | | |
| 200 | 0 DEG | 120 DEG | 240 DEG | | 0 DEG | 120 DEG | 240 DEG | | 0 DEG | 120 DEG | 240 DEG | | | | | INSIDE |
| 300 | | | | AMBIENT | | | | AMBIENT | | | | AMBIENT | | | | DEWAR |
| 400 | | | | | | | | | | | | | | | | |
| 00:54:29A | 48.3F | 47.8F | 47.1F | | 34.6F | 34.5F | 34.2F | | 43.3F | 42.8F | 43.5F | | | | | -319.2F |
| | | | | 53.2F | | | | 53.7F | | | | 57.8F | | | | 5023.3M* |
| 01:19:57A | 48.5F | 47.8F | 47.3F | | 34.5F | 34.9F | 34.1F | | 43.2F | 42.8F | 43.3F | | | | | -319.6F |
| | | | | 57.0F | | | | 54.1F | | | | 58.5F | | | | 5026.4M* |
| 01:45:24A | 48.7F | 48.2F | 47.7F | | 34.8F | 34.8F | 34.2F | | 43.2F | 42.8F | 43.4F | | | | | -319.5F |
| | | | | 57.2F | | | | 53.7F | | | | 58.4F | | | | 5040.9M* |
| 02:10:53A | 48.6F | 48.1F | 47.7F | | 34.8F | 35.0F | 34.4F | | 43.2F | 42.8F | 43.4F | | | | | -319.3F |
| | | | | 58.2F | | | | 53.3F | | | | 58.3F | | | | 5048.4M* |
| 02:36:22A | 48.5F | 48.0F | 47.5F | | 34.7F | 35.0F | 34.4F | | 43.1F | 42.7F | 43.1F | | | | | -319.3F |
| | | | | 58.9F | | | | 53.6F | | | | 58.0F | | | | 5006.2M* |
| 03:01:50A | 48.6F | 48.0F | 47.6F | | 34.6F | 35.0F | 34.3F | | 43.0F | 42.6F | 43.0F | | | | | -319.4F |
| | | | | 57.6F | | | | 53.3F | | | | 57.5F | | | | 5019.2M* |
| 03:27:19A | 48.4F | 47.8F | 47.3F | | 34.6F | 34.8F | 34.2F | | 42.9F | 42.5F | 43.0F | | | | | -319.4F |
| | | | | 56.5F | | | | 53.5F | | | | 57.7F | | | | 5031.5M* |
| 03:52:46A | 48.4F | 47.8F | 47.4F | | 34.6F | 34.8F | 34.2F | | 42.8F | 42.4F | 42.8F | | | | | -319.2F |
| | | | | 54.6F | | | | 53.7F | | | | 56.2F | | | | 5029.3M* |
| 04:18:15A | 48.2F | 47.8F | 47.2F | | 34.4F | 34.6F | 34.0F | | 42.7F | 42.4F | 42.9F | | | | | -319.3F |
| | | | | 56.2F | | | | 53.0F | | | | 57.7F | | | | 5046.3M* |
| 04:43:43A | 48.3F | 47.9F | 47.3F | | 34.3F | 34.7F | 34.0F | | 42.7F | 42.4F | 42.9F | | | | | -319.5F |
| | | | | 54.7F | | | | 53.0F | | | | 56.8F | | | | 4762.1M* |

CRYOLAB ROTARY BAYONET TEST -COLD-

| 0228 | 01 | 02 | 03 | 04 | 05 | 06 | 07 | 08 | 09 | 10 | 11 | 12 | 13 | 14 | 15 | 16 |
|---|---|---|---|---|---|---|---|---|---|---|---|---|---|---|---|---|
| 100 | TOP BAYONET | | | | MIDDLE BAYONET | | | | BOTTOM BAYONET | | | | | | | |
| 200 | 0 DEG | 120 DEG | 240 DEG | | 0 DEG | 120 DEG | 240 DEG | | 0 DEG | 120 DEG | 240 DEG | | | | | INSIDE |
| 300 | | | | AMBIENT | | | | AMBIENT | | | | AMBIENT | | | | DEWAR |
| 400 | | | | | | | | | | | | | | | | |
| 05:09:12A | 48.2F | 47.6F | 47.0F | | 34.3F | 34.4F | 33.7F | | 42.4F | 42.2F | 42.7F | | | | | -319.7F |
| | | | | 60.7F | | | | 53.4F | | | | 58.1F | | | | 4763.9M* |
| 05:34:41A | 48.2F | 47.6F | 47.1F | | 34.1F | 34.6F | 33.8F | | 42.4F | 42.0F | 42.6F | | | | | -319.5F |
| | | | | 53.3F | | | | 52.6F | | | | 55.6F | | | | 5036.5M* |
| 06:00:08A | 47.5F | 47.2F | 46.6F | | 34.2F | 34.5F | 33.8F | | 42.2F | 41.7F | 42.2F | | | | | -319.5F |
| | | | | 54.7F | | | | 52.8F | | | | 56.9F | | | | 5028.3M* |
| 06:25:38A | 47.3F | 46.9F | 46.2F | | 34.3F | 34.2F | 33.8F | | 42.2F | 41.7F | 42.3F | | | | | -319.6F |
| | | | | 57.6F | | | | 53.0F | | | | 57.2F | | | | 5020.3M* |
| 06:51:07A | 47.0F | 46.8F | 46.1F | | 34.4F | 34.7F | 34.0F | | 42.3F | 41.7F | 42.4F | | | | | -319.3F |
| | | | | 54.0F | | | | 53.4F | | | | 56.4F | | | | 5040.2M* |
| 07:16:36A | 46.8F | 46.7F | 46.0F | | 34.5F | 34.3F | 33.9F | | 42.3F | 41.8F | 42.3F | | | | | -319.3F |
| | | | | 51.8F | | | | 53.7F | | | | 56.4F | | | | 5028.4M* |
| 07:42:05A | 46.9F | 46.9F | 46.0F | | 34.5F | 34.3F | 33.9F | | 42.2F | 41.8F | 42.5F | | | | | -319.5F |
| | | | | 54.7F | | | | 54.2F | | | | 57.6F | CYCLE 109 | | | 4751.5M* |
| 08:07:33A | 47.1F | 46.9F | 46.2F | | 34.9F | 34.7F | 34.3F | | 42.3F | 41.9F | 42.2F | | | | | -319.7F |
| | | | | 58.2F | | | | 54.1F | | | | 57.8F | | | | 4758.3M* |
| 08:33:02A | 47.0F | 46.9F | 46.3F | | 34.4F | 34.0F | 33.7F | | 41.3F | 41.0F | 41.6F | | | | | -319.6F |
| | | | | 51.5F | | | | 53.3F | | | | 55.2F | | | | 5029.3M* |
| 08:58:31A | 47.4F | 47.2F | 46.6F | - | 34.5F | 34.3F | 34.0F | | 41.5F | 41.2F | 41.9F | | | | | -319.8F |
| | | | | 53.9F | | | | 54.1F | | | | 57.3F | | | | 5034.5M* |

CRYOLAB ROTARY BAYONET TEST -COLD-

| 0228 | 01 | 02 | 03 | 04 | 05 | 06 | 07 | 08 | 09 | 10 | 11 | 12 | 13 | 14 | 15 | 16 |
|---|---|---|---|---|---|---|---|---|---|---|---|---|---|---|---|---|
| 100 | TOP BAYONET | | | | MIDDLE BAYONET | | | | BOTTOM BAYONET | | | | | | | |
| 200 | 0 DEG | 120 DEG | 240 DEG | | 0 DEG | 120 DEG | 240 DEG | | 0 DEG | 120 DEG | 240 DEG | | | | | INSIDE |
| 300 | | | | AMBIENT | | | | AMBIENT | | | | AMBIENT | | | | DEWAR |
| 400 | | | | | | | | | | | | | | | | |
| 09:23:59A | 47.3F | 47.8F | 47.0F | | 34.7F | 34.8F | 34.3F | | 41.5F | 41.1F | 41.9F | | | | | -319.8F |
| | | | | 56.1F | | | | 52.2F | | | | 56.1F | | | | 5018.4M* |
| 09:49:28A | 47.7F | 47.4F | 46.7F | | 34.7F | 34.6F | 34.3F | | 42.4F | 41.9F | 42.9F | | | | | -301.4F |
| | | | | 58.9F | | | | 52.1F | | | | 59.1F | | | | 5046.4M* |
| 10:14:57A | 48.1F | 48.4F | 47.8F | | 35.4F | 35.7F | 35.2F | | 43.4F | 42.9F | 43.7F | | | | | -303.8F |
| | | | | 63.9F | | | | 55.6F | | | | 60.5F | | | | 5020.2M* |
| 10:40:25A | 50.4F | 50.0F | 49.8F | | 36.6F | 36.6F | 36.3F | | 44.3F | 44.0F | 44.8F | | | | | -303.1F |
| | | | | 64.0F | | | | 56.5F | | | | 61.2F | | | | 5042.6M* |
| 11:05:54A | 51.1F | 50.9F | 50.2F | | 37.0F | 37.5F | 36.9F | | 45.2F | 45.0F | 45.4F | | | | | -303.6F |
| | | | | 63.6F | | | | 56.7F | | | | 61.9F | | | | 5040.7M* |
| 11:31:23A | 52.1F | 52.0F | 51.4F | | 37.9F | 38.3F | 37.6F | | 45.6F | 44.6F | 44.3F | | | | | -302.8F |
| | | | | 62.3F | | | | 55.7F | | | | 46.1F | | | | 5048.3M* |
| 11:56:52A | 52.6F | 51.9F | 51.6F | | 37.3F | 37.6F | 37.1F | | 43.8F | 43.4F | 44.2F | | | | | -303.7F |
| | | | | 66.6F | | | | 58.5F | | | | 61.0F | | | | 5037.4M* |
| 12:22:20A | 53.7F | 53.1F | 52.9F | | 37.6F | 37.9F | 37.4F | | 44.7F | 44.2F | 45.2F | | | | | -304.9F |
| | | | | 67.6F | | | | 57.7F | | | | 62.2F | | | | 5051.0M* |
| 12:47:49A | 53.9F | 53.6F | 53.2F | | 38.1F | 38.3F | 37.9F | | 45.7F | 45.1F | 46.3F | | | | | -305.2F |
| | | | | 65.5F | | | | 59.1F | | | | 63.1F | | | | 5055.0M* |
| 13:17:18A | 54.1F | 53.8F | 53.6F | | 38.4F | 38.8F | 38.4F | | 46.2F | 45.7F | 46.7F | | | | | -305.5F |
| | | | | 66.2F | | | | 58.8F | | | | 63.1F | | | | 5070.3M* |

CRYOLAB ROTARY BAYONET TEST -COLD-

| 0228 | 01 | 02 | 03 | 04 | 05 | 06 | 07 | 08 | 09 | 10 | 11 | 12 | 13 | 14 | 15 | 16 |
|---|---|---|---|---|---|---|---|---|---|---|---|---|---|---|---|---|
| 100 | TOP BAYONET | | | | MIDDLE BAYONET | | | | BOTTOM BAYONET | | | | | | | |
| 200 | 0 DEG | 120 DEG | 240 DEG | | 0 DEG | 120 DEG | 240 DEG | | 0 DEG | 120 DEG | 240 DEG | | | | | INSIDE |
| 300 | | | | AMBIENT | | | | AMBIENT | | | | AMBIENT | | | | DEWAR |
| 400 | | | | | | | | | | | | | | | | |
| 13:38:45A | 54.7F | 54.4F | 54.2F | | 39.4F | 39.6F | 39.2F | | 47.0F | 46.7F | 47.7F | | | | | -307.8F |
| | | | | 67.3F | | | | 59.8F | | | | 65.4F | | | | 5058.6M+ |
| 14:04:14A | 54.7F | 54.4F | 54.1F | | 40.1F | 40.3F | 39.9F | | 47.8F | 47.2F | 48.2F | | | | | -308.7F |
| | | | | 66.3F | | | | 58.1F | | | | 64.4F | | | | 5023.8M+ |
| 14:29:42A | 55.0F | 54.5F | 54.2F | | 40.7F | 40.7F | 40.4F | | 48.1F | 47.7F | 48.4F | | | | | -309.4F |
| | | | | 67.3F | | | | 59.2F | | | | 64.9F | | | | 5024.9M+ |
| 14:55:11A | 55.0F | 54.7F | 54.3F | | 41.3F | 41.0F | 40.8F | | 48.6F | 48.1F | 49.2F | | | | | -310.5F |
| | | | | 66.4F | | | | 63.1F | | | | 66.7F | | | | 5033.7M+ |
| 15:20:40A | 55.2F | 54.9F | 54.4F | | 41.8F | 41.7F | 41.5F | | 48.8F | 48.6F | 49.6F | | | | | -314.0F |
| | | | | 67.6F | | | | 61.8F | | | | 67.3F | | | | 5032.9M+ |
| 15:46:08A | 55.5F | 55.1F | 55.1F | | 42.5F | 42.0F | 41.9F | | 49.2F | 48.9F | 49.9F | | | | | -318.9F |
| | | | | 68.1F | | | | 62.7F | | | | 67.8F | | | | 5012.7M+ |
| 16:11:37A | 55.8F | 55.5F | 55.1F | | 42.4F | 42.6F | 42.1F | | 49.0F | 48.6F | 49.3F | | | | | -320.1F |
| | | | | 67.7F | | | | 62.8F | | | | 65.4F | | | | 5015.9M+ |
| 16:37:06A | 55.5F | 55.1F | 54.8F | | 42.0F | 42.3F | 41.8F | | 49.1F | 48.6F | 49.3F | | | | | -319.8F |
| | | | | 67.1F | | | | 60.6F | | | | 64.3F | | | | 5021.6M+ |
| 17:02:34A | 55.8F | 55.3F | 55.3F | | 41.5F | 42.1F | 41.3F | | 48.6F | 48.3F | 48.8F | | | | | -319.7F |
| | | | | 67.6F | | | | 59.7F | | | | 64.1F | | | | 5013.9M+ |
| 17:28:03M | 55.1F | 54.9F | 54.8F | | 41.0F | 41.3F | 40.7F | | 48.2F | 47.8F | 48.4F | | | | | -319.5F |
| | | | | 65.9F | | | | [illegible]F | | | | 63.5F | | | | 5020.8M+ |

27

CRYOLAB ROTARY BAYONET TEST -COLD-

| 0228 | 01 | 02 | 03 | 04 | 05 | 06 | 07 | 08 | 09 | 10 | 11 | 12 | 13 | 14 | 15 | 16 |
|---|---|---|---|---|---|---|---|---|---|---|---|---|---|---|---|---|
| 100 | TOP BAYONET | | | | MIDDLE BAYONET | | | | BOTTOM BAYONET | | | | | | | |
| 200 | 0 DEG | 120 DEG | 240 DEG | | 0 DEG | 120 DEG | 240 DEG | | 0 DEG | 120 DEG | 240 DEG | | | | | INSIDE |
| 300 | | | | AMBIENT | | | | AMBIENT | | | | AMBIENT | | | | DEWAR |
| 400 | | | | | | | | | | | | | | | | |
| 17:53:32A | 54.9F | 54.4F | 54.1F | | 40.3F | 40.8F | 40.0F | | 47.7F | 47.2F | 47.8F | | | | | -319.5F |
| | | | | 62.4F | | | | 56.7F | | | | 64.0F | | | | 5027.4M+ |
| 18:19:00A | 55.6F | 55.0F | 55.2F | | 39.7F | 40.4F | 39.7F | | 47.3F | 46.8F | 47.4F | | | | | -319.6F |
| | | | | 64.3F | | | | 56.3F | | | | 63.6F | | | | 5016.4M+ |
| 18:44:29A | 55.8F | 55.4F | 55.6F | | 39.0F | 39.6F | 39.3F | | 46.9F | 46.5F | 47.0F | | | | | -319.6F |
| | | | | 64.5F | | | | 56.8F | | | | 63.2F | | | | 5032.8M+ |
| 19:09:58A | 55.9F | 55.5F | 55.5F | | 38.6F | 39.1F | 38.8F | | 46.8F | 46.2F | 46.9F | | | | | -319.5F |
| | | | | 62.7F | | | | 57.2F | | | | 63.1F | | | | 5012.5M+ |
| 19:35:27A | 55.5F | 55.2F | 55.2F | | 38.6F | 39.1F | 38.7F | | 46.7F | 46.1F | 46.9F | | | | | -319.7F |
| | | | | 60.6F | | | | 57.2F | | | | 63.6F | | | | 5021.5M+ |
| 20:00:58A | 55.6F | 55.2F | 55.2F | | 38.4F | 38.9F | 38.5F | | 46.6F | 46.1F | 46.9F | | | | | -319.5F |
| | | | | 62.3F | | | | 57.8F | | | | 63.7F | | | | 4731.0M+ |
| 20:26:26A | 55.8F | 55.4F | 55.7F | | 38.3F | 38.9F | 38.5F | | 46.5F | 46.0F | 46.8F | | | | | -319.5F |
| | | | | 60.6F | | | | 57.6F | | | | 64.3F | | | | 4552.6M+ |
| 20:51:53A | 56.4F | 56.0F | 56.3F | | 38.3F | 38.7F | 38.5F | | 46.4F | 45.8F | 46.6F | | | | | -319.4F |
| | | | | 61.7F | | | | 57.1F | | | | 64.4F | | | | 5039.7M+ |
| 21:17:22A | 56.2F | 55.8F | 56.3F | | 37.9F | 38.2F | 38.1F | | 46.2F | 45.7F | 46.6F | | | | | -277.6F |
| | | | | 67.0F | | | | 55.8F | | | | 63.1F | | | | 4759.1M+ |
| 21:42:50A | 56.6F | 56.1F | 56.5F | | 38.0F | 38.3F | 38.2F | | 46.0F | 45.6F | 46.6F | | | | | -302.2F |
| | | | | 66.7F | | | | 56.5F | | | | 63.2F | | | | 5032.1M+ |

CRYOLAB ROTARY BAYONET TEST -COLD-

| 0228 | 01 | 02 | 03 | 04 | 05 | 06 | 07 | 08 | 09 | 10 | 11 | 12 | 13 | 14 | 15 | 16 |
|---|---|---|---|---|---|---|---|---|---|---|---|---|---|---|---|---|
| 100 | TOP BAYONET | | | | MIDDLE BAYONET | | | | BOTTOM BAYONET | | | | | | | |
| 200 | 0 DEG | 120 DEG | 240 DEG | | 0 DEG | 120 DEG | 240 DEG | | 0 DEG | 120 DEG | 240 DEG | | | | | INSIDE |
| 300 | | | | AMBIENT | | | | AMBIENT | | | | AMBIENT | | | | DEWAR |
| 400 | | | | | | | | | | | | | | | | |
| 22:08:19A | 56.4F | 55.9F | 56.2F | | 38.0F | 38.3F | 38.1F | | 46.1F | 45.6F | 46.4F | | | | | -303.0F |
| | | | | 67.9F | | | | 55.6F | | | | 62.9F | | | | 5047.3M* |
| 22:33:48A | 56.2F | 55.8F | 56.1F | | 37.8F | 38.2F | 38.0F | | 46.1F | 45.6F | 46.6F | | | | | -302.7F |
| | | | | 67.0F | | | | 55.6F | | | | 63.2F | | | | 5037.5M* |
| 22:59:16A | 56.7F | 56.3F | 56.6F | | 37.9F | 38.3F | 38.2F | | 46.1F | 45.6F | 46.6F | | | | | -303.6F |
| | | | | 68.2F | | | | 55.8F | | | | 63.0F | | | | 5050.9M* |
| 23:24:45A | 56.6F | 56.3F | 56.6F | | 38.0F | 38.3F | 38.2F | | 46.1F | 45.6F | 46.6F | | | | | -303.5F |
| | | | | 68.1F | | | | 55.9F | | | | 63.0F | | | | 5051.8M* |
| 23:50:14A | 56.7F | 56.4F | 56.7F | | 38.1F | 38.4F | 38.2F | | 46.2F | 45.7F | 46.7F | | | | | -305.1F |
| | | | | 68.7F | | | | 56.8F | | | | 63.3F | | | | 5052.3M* |
| 00:15:43A | 56.9F | 56.6F | 56.8F | | 38.2F | 38.5F | 38.3F | | 46.3F | 45.8F | 46.8F | | | | | -305.1F |
| | | | | 68.0F | | | | 56.0F | | | | 63.3F | | | | 5064.0M* |
| 00:41:11A | 56.7F | 56.3F | 56.6F | | 38.2F | 38.5F | 38.4F | | 46.4F | 46.0F | 46.9F | | | | | -306.9F |
| | | | | 68.0F | | | | 56.0F | | | | 63.1F | | | | 5039.4M* |
| 01:06:40A | 56.9F | 56.6F | 57.2F | | 38.3F | 38.6F | 38.5F | | 46.4F | 46.0F | 47.0F | | | | | -306.3F |
| | | | | 69.2F | | | | 57.2F | | | | 63.5F | | | | 5044.9M* |
| 01:32:09A | 57.1F | 56.8F | 57.2F | | 38.4F | 38.6F | 38.6F | | 46.4F | 46.0F | 46.9F | | | | | -307.3F |
| | | | | 68.0F | | | | 56.2F | | | | 63.4F | | | | 5047.9M* |
| 01:57:38A | 56.8F | 56.5F | 56.8F | | 38.3F | 38.6F | 38.5F | | 46.4F | 46.0F | 47.0F | | | | | -307.5F |
| | | | | 67.6F | | | | 55.8F | | | | 63.4F | | | | 5049.5M* |

29

CRYOLAB ROTARY BAYONET TEST -COLD-

| 0229 | 01 | 02 | 03 | 04 | 05 | 06 | 07 | 08 | 09 | 10 | 11 | 12 | 13 | 14 | 15 | 16 |
|---|---|---|---|---|---|---|---|---|---|---|---|---|---|---|---|---|
| 100 | TOP BAYONET | | | | MIDDLE BAYONET | | | | BOTTOM BAYONET | | | | | | | |
| 200 | 0 DEG | 120 DEG | 240 DEG | | 0 DEG | 120 DEG | 240 DEG | | 0 DEG | 120 DEG | 240 DEG | | | | | INSIDE |
| 300 | | | | AMBIENT | | | | AMBIENT | | | | AMBIENT | | | | DEWAR |
| 400 | | | | | | | | | | | | | | | | |
| 02:23:06A | 57.1F | 56.7F | 56.9F | | 38.5F | 38.9F | 38.7F | | 46.6F | 46.1F | 47.1F | | | | | -306.8F |
| | | | | 68.1F | | | | 56.3F | | | | 63.5F | | | | 5043.6M* |
| 2:48:35A | 56.5F | 56.1F | 56.1F | | 38.4F | 38.8F | 38.5F | | 46.7F | 46.2F | 47.1F | | | | | -310.2F |
| | | | | 67.5F | | | | 55.5F | | | | 63.2F | | | | 5039.9M* |
| 3:14:02A | 56.2F | 55.8F | 56.0F | | 38.2F | 38.7F | 38.4F | | 46.6F | 46.2F | 47.2F | | | | | -310.3F |
| | | | | 68.0F | | | | 56.3F | | | | 63.9F | | | | 5027.5M* |
| 3:39:31A | 56.5F | 56.1F | 56.4F | | 38.6F | 38.9F | 38.7F | | 46.9F | 46.4F | 47.3F | | | | | -315.6F |
| | | | | 67.4F | | | | 56.0F | | | | 63.3F | | | | 5024.9M* |
| 4:04:59A | 56.1F | 55.8F | 55.9F | | 38.4F | 38.7F | 38.4F | | 46.8F | 46.3F | 47.1F | | | | | -320.2F |
| | | | | 66.7F | | | | 55.8F | | | | 63.2F | | | | 5024.0M* |
| 4:30:28A | 56.7F | 56.4F | 56.7F | | 38.5F | 38.9F | 38.6F | | 46.9F | 46.4F | 47.2F | | | | | -320.0F |
| | | | | 68.7F | | | | 57.1F | | | | 63.4F | | | | 5029.2M* |
| 4:55:55A | 56.5F | 56.2F | 56.2F | | 38.5F | 38.8F | 38.6F | | 46.9F | 46.5F | 47.1F | | | | | -319.8F |
| | | | | 66.6F | | | | 57.1F | | | | 63.3F | | | | 5039.3M* |
| 5:21:23A | 56.3F | 55.9F | 56.0F | | 38.4F | 38.8F | 38.5F | | 47.0F | 46.5F | 47.4F | | | | | -319.7F |
| | | | | 66.4F | | | | 56.8F | | | | 63.8F | | | | 5038.4M* |
| 5:46:52A | 56.6F | 56.3F | 56.5F | | 38.5F | 39.0F | 38.7F | | 46.9F | 46.5F | 47.4F | | | | | -320.0F |
| | | | | 68.3F | | | | 56.8F | | | | 64.0F | | | | 5029.6M* |
| 6:12:21A | 56.8F | 56.4F | 56.5F | | 38.6F | 39.0F | 38.7F | | 46.9F | 46.4F | 47.3F | | | | | -319.8F |
| | | | | 66.5F | | | | 56.8F | | | | 63.8F | | | | 5024.1M* |

CRYOLAB ROTARY BAYONET TEST -COLD-

| 229 | 01 | 02 | 03 | 04 | 05 | 06 | 07 | 08 | 09 | 10 | 11 | 12 | 13 | 14 | 15 | 16 |
|---|---|---|---|---|---|---|---|---|---|---|---|---|---|---|---|---|
| 00 | TOP BAYONET | | | | MIDDLE BAYONET | | | | BOTTOM BAYONET | | | | | | | |
| 00 | 0 DEG | 120 DEG | 240 DEG | | 0 DEG | 120 DEG | 240 DEG | | 0 DEG | 120 DEG | 240 DEG | | | | | INSIDE |
| 00 | | | | AMBIENT | | | | AMBIENT | | | | AMBIENT | | | | DEWAR |
| 00 | | | | | | | | | | | | | | | | |
| 6:37:50A | 56.6F | 56.3F | 56.6F | | 38.5F | 38.8F | 38.7F | | 46.9F | 46.3F | 47.2F | | | | | -319.8F |
| | | | | 62.5F | | | | 57.2F | | | | 63.3F | | | | 5032.7M* |
| 7:03:18A | 57.2F | 56.9F | 57.2F | | 38.5F | 38.8F | 38.6F | | 46.7F | 46.3F | 47.2F | | | | | -319.9F |
| | | | | 64.7F | | | | 57.0F | | | | 63.3F | | | | 5040.0M* |
| 7:28:47A | 57.0F | 56.6F | 56.6F | | 38.5F | 38.9F | 38.6F | | 46.7F | 46.1F | 47.1F | | | | | -319.7F |
| | | | | 64.2F | | | | 57.2F | | | | 63.1F | | | | 5007.3M* |
| 7:54:16A | 56.4F | 55.8F | 55.7F | | 38.5F | 39.0F | 38.5F | | 46.9F | 46.3F | 47.3F | | | | | -319.7F |
| | | | | 62.8F | | | | 56.4F | | | | 63.1F | | | | 5040.2M* |
| 8:19:45A | 56.6F | 56.1F | 55.7F | | 38.8F | 39.3F | 38.8F | | 46.9F | 46.4F | 47.5F | | | | | -302.0F |
| | | | | 67.7F | | | | 58.2F | | | | 63.6F | | | | 5031.9M* |
| 8:45:15A | 56.1F | 55.5F | 55.2F | | 39.1F | 39.5F | 39.0F | | 47.2F | 46.7F | 47.8F | | | | | -300.3F |
| | | | | 67.9F | | | | 58.4F | | | | 63.9F | | | | 5038.8M* |
| 9:10:44A | 55.9F | 55.3F | 55.1F | | 39.2F | 39.6F | 39.1F | | 47.4F | 46.9F | 47.9F | | | | | -320.0F |
| | | | | 68.8F | | | | 58.3F | | | | 64.0F | | | | 4771.3M* |
| 9:36:13A | 56.1F | 55.7F | 55.4F | | 39.5F | 39.9F | 39.5F | | 47.7F | 47.1F | 48.3F | | | | | -319.6F |
| | | | | 67.7F | | | | 57.3F | | | | 64.4F | | | | 4770.2M* |
| 0:01:41A | 56.0F | 55.5F | 55.4F | | 39.6F | 40.0F | 39.6F | | 47.9F | 47.4F | 48.6F | | | | | -320.1F |
| | | | | 68.6F | | | | 58.1F | | | | 64.9F | | | | 4760.9M* |
| 10:27:10A | 56.5F | 56.0F | 55.8F | | 39.8F | 40.3F | 39.8F | | 48.2F | 47.7F | 48.8F | | | | | -319.9F |
| | | | | 67.8F | | | | 59.[illegible] | | | | 65.4F | | | | 4764.4M* |

31

CRYOLAB ROTARY BAYONET TEST -COLD-

| 0229 | 01 | 02 | 03 | 04 | 05 | 06 | 07 | 08 | 09 | 10 | 11 | 12 | 13 | 14 | 15 | 16 |
|---|---|---|---|---|---|---|---|---|---|---|---|---|---|---|---|---|
| 100 | TOP BAYONET | | | | MIDDLE BAYONET | | | | BOTTOM BAYONET | | | | | | | |
| 200 | 0 DEG | 120 DEG | 240 DEG | | 0 DEG | 120 DEG | 240 DEG | | 0 DEG | 120 DEG | 240 DEG | | | | | |
| 300 | | | | AMBIENT | | | | AMBIENT | | | | AMBIENT | | | | INSIDE DEWAR |
| 400 | | | | | | | | | | | | | | | | |
| 10:52:39A | 56.6F | 56.1F | 55.8F | | 39.9F | 40.4F | 40.0F | | 48.5F | 48.0F | 49.1F | | | | | -301.8F |
| | | | | 69.2F | | | | 57.9F | | | | 65.0F | | | | 5045.6M+ |
| 11:18:06A | 56.9F | 56.5F | 56.1F | | 40.3F | 40.8F | 40.3F | | 49.0F | 48.3F | 49.4F | | | | | -319.5F |
| | | | | 64.5F | | | | 59.0F | | | | 63.8F | | | | 5036.4M+ |
| 11:43:34A | 56.9F | 56.4F | 56.1F | | 40.5F | 40.9F | 40.4F | | 49.0F | 48.4F | 49.7F | | | | | -301.7F |
| | | | | 69.1F | | | | 59.2F | | | | 66.1F | | | | 5044.5M+ |
| 12:09:03A | 57.2F | 56.6F | 56.4F | | 40.5F | 40.9F | 40.6F | | 49.3F | 48.7F | 49.9F | | | | | -319.8F |
| | | | | 70.5F | | | | 59.4F | | | | 66.3F | | | | 4750.2M+ |
| 12:34:32A | 57.6F | 57.0F | 57.1F | | 40.7F | 41.2F | 40.8F | | 49.5F | 49.1F | 50.1F | | | | | -300.5F |
| | | | | 71.1F | | | | 59.2F | | | | 66.5F | | | | 5046.3M+ |
| 13:00:00A | 58.1F | 57.5F | 57.5F | | 41.0F | 41.4F | 41.1F | | 49.6F | 49.1F | 50.4F | | | | | -302.0F |
| | | | | 71.1F | | | | 60.5F | | | | 66.8F | | | | 5061.3M+ |
| 13:25:29A | 58.4F | 57.7F | 57.7F | | 41.3F | 41.8F | 41.4F | | 49.9F | 49.5F | 50.6F | | | | | -303.6F |
| | | | | 71.3F | | | | 60.0F | | | | 66.8F | | | | 5053.7M+ |
| 13:50:58A | 58.7F | 58.0F | 57.9F | | 41.6F | 42.1F | 41.6F | | 50.2F | 49.7F | 50.8F | | | | | -304.7F |
| | | | | 71.2F | | | | 59.8F | | | | 66.7F | | | | 5053.9M+ |
| 14:16:26A | 58.9F | 58.3F | 58.3F | | 41.7F | 42.3F | 41.8F | | 50.3F | 49.8F | 51.0F | | | | | -306.8F |
| | | | | 71.7F | | | | 59.7F | | | | 67.2F | | | | 5044.5M+ |
| 14:41:55A | 59.1F | 58.4F | 58.3F | | 41.8F | 42.4F | 41.9F | | 50.6F | 50.1F | 51.2F | | | | | -307.9F |
| | | | | 71.5F | | | | 60.8F | | | | 67.3F | | | | 5047.4M+ |

CRYOLAB ROTARY BAYONET TEST -COLD-

| 0229 | 01 | 02 | 03 | 04 | 05 | 06 | 07 | 08 | 09 | 10 | 11 | 12 | 13 | 14 | 15 | 16 |
|---|---|---|---|---|---|---|---|---|---|---|---|---|---|---|---|---|
| 100 | TOP BAYONET | | | | MIDDLE BAYONET | | | | BOTTOM BAYONET | | | | | | | |
| 200 | 0 DEG | 120 DEG | 240 DEG | | 0 DEG | 120 DEG | 240 DEG | | 0 DEG | 120 DEG | 240 DEG | | | | | INSIDE DEWAR |
| 300 | | | | AMBIENT | | | | AMBIENT | | | | AMBIENT | | | | |
| 400 | | | | | | | | | | | | | | | | |
| 15:07:24A | 59.2F | 58.8F | 59.2F | | 42.1F | 42.7F | 42.2F | | 50.8F | 50.4F | 51.3F | | | | | -310.5F |
| | | | | 71.5F | | | | 60.7F | | | | 67.7F | | | | 5029.7M* |
| 15:32:53A | 59.8F | 59.4F | 59.8F | | 42.4F | 42.8F | 42.5F | | 50.8F | 50.4F | 51.5F | | | | | -315.1F |
| | | | | 72.1F | | | | 61.5F | | | | 68.1F | | | | 5024.1M* |
| 15:58:21A | 60.2F | 59.9F | 60.3F | | 42.6F | 43.1F | 42.9F | | 51.0F | 50.7F | 51.7F | | | | | -319.2F |
| | | | | 72.4F | | | | 61.2F | | | | 68.3F | | | | 5026.2M* |
| 16:23:50A | 60.2F | 59.9F | 60.3F | | 42.7F | 43.0F | 42.9F | | 51.0F | 50.7F | 51.5F | | | | | -320.2F |
| | | | | 72.2F | | | | 61.5F | | | | 68.3F | | | | 5027.0M* |
| 16:49:19A | 60.7F | 60.3F | 60.8F | | 42.7F | 43.1F | 43.0F | | 51.0F | 50.7F | 51.6F | | | | | -320.1F |
| | | | | 72.4F | | | | 60.4F | | | | 67.7F | | | | 5022.8M* |
| 17:14:49A | 61.3F | 60.9F | 61.5F | | 42.7F | 43.1F | 43.1F | | 50.8F | 50.6F | 51.4F | | | | | -320.1F |
| | | | | 72.7F | | | | 60.8F | | | | 67.9F | | | | 4854.2M* |
| 17:40:18A | 61.6F | 61.3F | 61.7F | | 42.7F | 43.1F | 43.1F | | 50.7F | 50.6F | 51.3F | | | | | -320.1F |
| | | | | 73.0F | | | | 60.7F | | | | 67.7F | | | | 5027.5M* |
| 18:05:47A | 61.4F | 61.1F | 61.6F | | 42.5F | 42.8F | 42.8F | | 50.4F | 50.5F | 51.1F | | | | | -320.4F |
| | | | | 72.0F | | | | 60.4F | | | | 67.1F | | | | 5036.2M* |
| 18:31:16A | 61.6F | 61.2F | 61.7F | | 42.4F | 42.7F | 42.6F | | 50.4F | 50.5F | 51.1F | | | | | -320.1F |
| | | | | 72.8F | | | | 60.8F | | | | 67.5F | | | | 5023.4M* |
| 18:56:44A | 61.7F | 61.2F | 61.7F | | 42.2F | 42.5F | 42.6F | | 50.4F | 50.5F | 51.2F | | | | | -320.0F |
| | | | | 72.5F | | | | 61.1F | | | | 67.3F | | | | 5033.8M* |

33

CRYOLAB ROTARY BAYONET TEST -COLD-

| 0229 | 01 | 02 | 03 | 04 | 05 | 06 | 07 | 08 | 09 | 10 | 11 | 12 | 13 | 14 | 15 | 16 |
|---|---|---|---|---|---|---|---|---|---|---|---|---|---|---|---|---|
| 100 | TOP BAYONET | | | | MIDDLE BAYONET | | | | BOTTOM BAYONET | | | | | | | |
| 200 | 0 DEG | 120 DEG | 240 DEG | | 0 DEG | 120 DEG | 240 DEG | | 0 DEG | 120 DEG | 240 DEG | | | | | |
| 300 | | | | AMBIENT | | | | AMBIENT | | | | AMBIENT | | | | INSIDE DEWAR |
| 400 | | | | | | | | | | | | | | | | |
| 19:22:15A | 61.4F | 61.0F | 61.4F | | 42.2F | 42.5F | 42.4F | | 50.4F | 50.5F | 51.1F | | | | | -319.8F |
| | | | | 71.7F | | | | 59.8F | | | | 67.1F | | | | 5029.3M* |
| 19:47:43A | 61.4F | 61.0F | 61.5F | | 42.1F | 42.4F | 42.3F | | 50.3F | 50.4F | 50.8F | | | | | -320.0F |
| | | | | 72.0F | | | | 59.5F | | | | 66.7F | | | | 5042.9M* |
| 20:13:12A | 61.2F | 60.8F | 61.2F | | 41.9F | 42.3F | 42.2F | | 50.2F | 50.2F | 50.8F | | | | | -319.7F |
| | | | | 70.9F | | | | 59.4F | | | | 66.7F | | | | 5043.3M* |
| 20:38:41A | 61.1F | 60.6F | 60.8F | | 41.8F | 42.2F | 42.0F | | 50.1F | 50.0F | 50.6F | | | | | -319.8F |
| | | | | 68.9F | | | | 59.4F | | | | 66.7F | | | | 5046.5M* |
| 21:04:10A | 61.0F | 60.6F | 61.0F | | 41.5F | 41.6F | 41.6F | | 49.7F | 49.7F | 50.6F | | | | | -276.8F |
| | | | | 72.1F | | | | 59.3F | | | | 66.4F | | | | 5059.2M* |
| 21:29:38A | 60.6F | 60.2F | 60.6F | | 41.3F | 41.5F | 41.5F | | 49.5F | 49.5F | 50.4F | | | | | -279.1F |
| | | | | 71.7F | | | | 58.9F | | | | 66.5F | | | | 5056.1M* |
| 21:51:56A | 60.7F | 60.4F | 60.8F | | 41.3F | 41.8F | 41.6F | | 49.4F | 48.8F | 48.5F | | | | | -292.8F |
| | | | | 72.4F | | | | 59.5F | | | | 61.6F | | | | 4742.8M* |
| 22:06:30A | 61.0F | 60.6F | 60.9F | | 41.5F | 41.6F | 41.7F | | 49.3F | 49.4F | 50.1F | | | | | -263.6F |
| | | | | 72.8F | | | | 60.3F | | | | 66.7F | | | | 5045.7M* |
| 22:06:00 | 61.1F | 60.4F | 60.9F | | 41.4F | 41.5F | 41.6F | | 49.4F | 49.4F | 49.7F | | | | | -261.5F |
| | | | | 73.0F | | | | 59.1F | | | | 61.6F | | | | 0.0M |
| 22:11:00 | 61.1F | 60.1F | 60.7F | | 41.0F | 41.1F | 40.9F | | 48.2F | 47.7F | 47.4F | | | | | -182.3F |
| | | | | 72.6F | | | | 58.5F | | | | 59.1F | | | | 0.0M |

SIDE WARM UP

WARM UP

CRYOLAB ROTARY BAYONET TEST -COLD-

| 0229 | 01 | 02 | 03 | 04 | 05 | 06 | 07 | 08 | 09 | 10 | 11 | 12 | 13 | 14 | 15 | 16 |
|---|---|---|---|---|---|---|---|---|---|---|---|---|---|---|---|---|
| 100 | TOP BAYONET | | | | MIDDLE BAYONET | | | | BOTTOM BAYONET | | | | | | | |
| 200 | 0 DEG | 120 DEG | 240 DEG | | 0 DEG | 120 DEG | 240 DEG | | 0 DEG | 120 DEG | 240 DEG | | | | | INSIDE DEWAR |
| 300 | | | | AMBIENT | | | | AMBIENT | | | | AMBIENT | | | | |
| 400 | | | | | | | | | | | | | | | | |
| 22:58:00 | 61.3F | 60.6F | 61.1F | | 41.2F | 41.4F | 41.2F | | 47.5F | 46.9F | 46.7F | | | | | -125.2F |
| | | | | 74.0F | | | | 59.5F | | | | 58.2F | | | | 0.0M |
| 23:23:00 | 62.3F | 61.6F | 62.1F | | 42.2F | 42.4F | 42.1F | | 47.4F | 46.9F | 46.6F | | | | | -95.8F |
| | | | | 73.4F | | | | 59.3F | | | | 58.3F | | | | 0.1M |
| 23:48:00 | 62.8F | 62.2F | 62.7F | | 43.1F | 43.3F | 43.1F | | 47.8F | 47.3F | 47.0F | | | | | -74.4F |
| | | | | 73.3F | | | | 59.9F | | | | 58.8F | | | | 0.0M |
| 00:13:00 | 63.5F | 63.0F | 63.4F | | 44.1F | 44.3F | 44.1F | | 48.3F | 47.8F | 47.5F | | | | | -68.1F |
| | | | | 73.9F | | | | 61.0F | | | | 58.4F | | | | -0.1M |
| 00:38:00 | 64.4F | 63.9F | 64.3F | | 45.1F | 45.3F | 45.1F | | 48.9F | 48.4F | 48.1F | | | | | -51.1F |
| | | | | 74.0F | | | | 60.4F | | | | 59.4F | | | | 0.1M |
| 01:03:00 | 64.9F | 64.4F | 64.8F | | 46.0F | 46.2F | 46.0F | | 49.5F | 49.0F | 48.8F | | | | | -41.2F |
| | | | | 73.3F | | | | 60.8F | | | | 59.0F | | | | -0.1M |
| 01:28:00 | 65.8F | 65.3F | 65.6F | | 47.1F | 47.4F | 47.1F | | 50.0F | 49.6F | 49.4F | | | | | -36.1F |
| | | | | 75.8F | | | | 62.3F | | | | 59.4F | | | | 0.1M |
| 01:53:00 | 66.4F | 65.9F | 66.3F | | 48.2F | 48.4F | 48.1F | | 50.7F | 50.2F | 49.9F | | | | | -27.4F |
| | | | | 74.8F | | | | 62.3F | | | | 59.3F | | | | 0.1M |
| 02:18:00 | 66.7F | 66.3F | 66.7F | | 49.1F | 49.3F | 49.1F | | 51.1F | 50.7F | 50.5F | | | | | -23.9F |
| | | | | 75.0F | | | | 62.1F | | | | 60.3F | | | | -0.1M |
| 02:43:00 | [illegible] | 67.1F | 67.3F | | 50.1F | 50.3F | 50.1F | | 51.6F | 51.1F | 50.9F | | | | | -13.6F |
| | | | | 76.0F | | | | [illegible].5F | | | | 59.5F | | | | -0.1M |

35

CRYOLAB ROTARY BAYONET TEST -COLD-

| 0230 100 200 300 400 | 01 | 02 | 03 | 04 | 05 | 06 | 07 | 08 | 09 | 10 | 11 | 12 | 13 | 14 | 15 | 16 |
|---|---|---|---|---|---|---|---|---|---|---|---|---|---|---|---|---|
| | TOP BAYONET | | | | MIDDLE BAYONET | | | | BOTTOM BAYONET | | | | | | | |
| | 0 DEG | 120 DEG | 240 DEG | | 0 DEG | 120 DEG | 240 DEG | | 0 DEG | 120 DEG | 240 DEG | | | | | INSIDE DEWAR |
| | | | | AMBIENT | | | | AMBIENT | | | | AMBIENT | | | | |
| 03:08:00 | 67.9F | 67.4F | 67.8F | | 51.0F | 51.2F | 51.0F | | 52.1F | 51.6F | 51.4F | | | | | 2.5F |
| | | | | 74.6F | | | | 63.1F | | | | 60.8F | | | | 0.1M |
| 03:33:00 | 68.0F | 67.6F | 68.0F | | 51.8F | 52.0F | 51.8F | | 52.4F | 52.0F | 51.8F | | | | | 8.3F |
| | | | | 74.2F | | | | 63.2F | | | | 61.0F | | | | 0.0M |
| 03:58:00 | 68.8F | 68.3F | 68.7F | | 52.7F | 52.9F | 52.7F | | 53.0F | 52.5F | 52.3F | | | | | 14.1F |
| | | | | 76.1F | | | | 64.1F | | | | 61.6F | | | | -0.1M |
| 04:23:00 | 68.9F | 68.5F | 68.9F | | 53.4F | 53.6F | 53.4F | | 53.5F | 53.0F | 52.8F | | | | | 18.8F |
| | | | | 75.2F | | | | 64.6F | | | | 61.7F | | | | -0.1M |
| 04:48:00 | 69.2F | 68.8F | 69.0F | | 54.1F | 54.4F | 54.1F | | 54.0F | 53.6F | 53.3F | | | | | 21.0F |
| | | | | 77.2F | | | | 64.9F | | | | 61.5F | | | | 0.0M |
| 05:13:00 | 69.7F | 69.3F | 69.6F | | 55.0F | 55.1F | 54.9F | | 54.5F | 54.1F | 53.9F | | | | | 25.8F |
| | | | | 75.9F | | | | 65.1F | | | | 62.3F | | | | 0.0M |
| 05:38:00 | 69.8F | 69.4F | 69.8F | | 55.6F | 55.7F | 55.5F | | 55.0F | 54.6F | 54.4F | | | | | 27.3F |
| | | | | 75.7F | | | | 65.1F | | | | 62.6F | | | | -0.1M |
| 06:03:00 | 70.2F | 69.9F | 70.1F | | 56.3F | 56.5F | 56.2F | | 55.5F | 55.2F | 55.0F | | | | | 29.1F |
| | | | | 77.3F | | | | 66.4F | | | | 61.5F | | | | 0.0M |
| 06:28:00 | 70.5F | 70.1F | 70.4F | | 57.0F | 57.1F | 56.9F | | 56.1F | 55.6F | 55.5F | | | | | 28.6F |
| | | | | 76.1F | | | | 66.1F | | | | 61.5F | | | | -0.1M |
| 06:53:00 | 70.5F | 70.2F | 70.5F | | 57.6F | 57.7F | 57.5F | | 56.6F | 56.2F | 56.1F | | | | | 29.4F |
| | | | | 76.2F | | | | 66.2F | | | | 63.0F | | | | 0.0M |

CRYOLAB ROTARY BAYONET TEST -COLD-

| 0230 | 01 | 02 | 03 | 04 | 05 | 06 | 07 | 08 | 09 | 10 | 11 | 12 | 13 | 14 | 15 | 16 |
|---|---|---|---|---|---|---|---|---|---|---|---|---|---|---|---|---|
| 100 | TOP BAYONET | | | | MIDDLE BAYONET | | | | BOTTOM BAYONET | | | | | | | |
| 200 | 0 DEG | 120 DEG | 240 DEG | | 0 DEG | 120 DEG | 240 DEG | | 0 DEG | 120 DEG | 240 DEG | | | | | INSIDE DEWAR |
| 300 | | | | AMBIENT | | | | AMBIENT | | | | AMBIENT | | | | |
| 400 | | | | | | | | | | | | | | | | |
| 07:18:00 | 71.1F | 70.8F | 71.0F | | 58.3F | 58.5F | 58.3F | | 57.1F | 56.7F | 56.5F | | | | | 30.4F |
| | | | | 77.4F | | | | 66.7F | | | | 63.4F | | | | 0.1M |
| 07:43:00 | 71.4F | 71.1F | 71.4F | | 58.9F | 59.1F | 58.9F | | 57.5F | 57.1F | 56.9F | | | | | 29.0F |
| | | | | 77.2F | | | | 67.1F | | | | 63.9F | | | | 0.0M |
| 08:08:00 | 71.9F | 71.5F | 71.7F | | 59.6F | 59.7F | 59.5F | | 57.8F | 57.4F | 57.3F | | | | | 30.1F |
| | | | | 78.2F | | | | 67.9F | | | | 63.4F | | | | 0.0M |
| 08:33:00 | 72.4F | 72.0F | 72.4F | | 60.4F | 60.5F | 60.3F | | 58.1F | 57.7F | 57.5F | | | | | 30.9F |
| | | | | 77.6F | | | | 67.7F | | | | 64.3F | | | | 0.0M |
| 08:58:00 | 72.7F | 72.4F | 72.7F | | 61.1F | 61.2F | 61.0F | | 58.2F | 57.8F | 57.6F | | | | | 34.5F |
| | | | | 77.6F | | | | 68.1F | | | | 64.3F | | | | 0.0M |
| 09:23:00 | 73.3F | 73.0F | 73.3F | | 62.0F | 62.0F | 61.9F | | 58.8F | 58.4F | 58.3F | | | | | 36.0F |
| | | | | 78.8F | | | | 69.0F | | | | 64.1F | | | | -0.1M |
| 09:48:00 | 73.6F | 73.3F | 73.6F | | 62.7F | 62.8F | 62.6F | | 59.8F | 59.4F | 59.3F | | | | | 41.2F |
| | | | | 78.4F | | | | 69.5F | | | | 65.0F | | | | 0.0M |
| 10:13:00 | 74.2F | 74.0F | 74.1F | | 63.6F | 63.6F | 63.4F | | 60.7F | 60.4F | 60.3F | | | | | 43.6F |
| | | | | 80.4F | | | | 70.7F | | | | 65.2F | | | | 0.0M |
| 10:38:00 | 74.9F | 74.6F | 74.8F | | 64.5F | 64.6F | 64.4F | | 61.7F | 61.4F | 61.3F | | | | | 46.4F |
| | | | | 80.4F | | | | 70.8F | | | | 65.5F | | | | 0.0M |
| 11:03:00 | 74.9F | 74.7F | 74.8F | | 65.2F | 65.4F | 65.2F | | 62.6F | 62.3F | 62.2F | | | | | 48.7F |
| | | | | 78.1F | | | | [illegible] | | | | 66.6F | | | | 0.0M |

CRYOLAB ROTARY BAYONET TEST -COLD-

| 0230 | 01 | 02 | 03 | 04 | 05 | 06 | 07 | 08 | 09 | 10 | 11 | 12 | 13 | 14 | 15 | 16 |
|---|---|---|---|---|---|---|---|---|---|---|---|---|---|---|---|---|
| 100 | TOP BAYONET | | | | MIDDLE BAYONET | | | | BOTTOM BAYONET | | | | | | | |
| 200 | 0 DEG | 120 DEG | 240 DEG | | 0 DEG | 120 DEG | 240 DEG | | 0 DEG | 120 DEG | 240 DEG | | | | | INSIDE |
| 300 | | | | AMBIENT | | | | AMBIENT | | | | AMBIENT | | | | DEWAR |
| 400 | | | | | | | | | | | | | | | | |
| 11:28:00 | 74.3F | 74.1F | 74.1F | | 65.8F | 66.0F | 65.7F | | 63.4F | 63.1F | 63.0F | | | | | 56.4F |
| | | | | 77.5F | | | | 71.2F | | | | 67.1F | | | | -0.1M |
| 11:53:00 | 74.5F | 74.1F | 74.3F | | 66.4F | 66.5F | 66.2F | | 64.2F | 63.9F | 63.7F | | | | | 52.6F |
| | | | | 80.5F | | | | 71.9F | | | | 67.2F | | | | 0.0M |
| 12:18:00 | 74.5F | 74.3F | 74.5F | | 67.1F | 67.2F | 66.9F | | 65.0F | 64.6F | 64.5F | | | | | 54.5F |
| | | | | 78.7F | | | | 72.2F | | | | 68.2F | | | | 0.0M |
| 12:43:00 | 73.6F | 73.3F | 73.5F | | 67.7F | 67.7F | 67.5F | | 65.7F | 65.4F | 65.2F | | | | | 57.8F |
| | | | | 78.1F | | | | 72.3F | | | | 68.7F | | | | 0.0M |
| 13:08:00 | 72.9F | 72.6F | 72.7F | | 68.3F | 68.4F | 68.2F | | 66.4F | 66.1F | 66.0F | | | | | 61.4F |
| | | | | 77.8F | | | | 73.0F | | | | 68.8F | | | | 0.0M |
| 13:33:00 | 71.6F | 71.4F | 71.2F | | 68.8F | 68.9F | 68.7F | | 67.1F | 66.8F | 66.7F | | | | | 65.5F |
| | | | | 76.5F | | | | 73.1F | | | | 69.2F | | | | 0.0M |
| 13:58:00 | 71.9F | 71.5F | 71.5F | | 69.3F | 69.3F | 69.0F | | 67.7F | 67.4F | 67.3F | | | | | 69.9F |
| | | | | 77.5F | | | | 73.6F | | | | 69.6F | | | | -0.1M |
| 14:23:00 | 72.6F | 72.3F | 72.3F | | 69.6F | 69.6F | 69.4F | | 68.1F | 67.9F | 67.8F | | | | | 72.4F |
| | | | | 77.5F | | | | 73.5F | | | | 69.9F | | | | 0.0M |
| 14:48:00 | 73.7F | 73.4F | 73.5F | | 69.9F | 69.9F | 69.7F | | 68.6F | 68.4F | 68.3F | | | | | 74.7F |
| | | | | 79.6F | | | | 73.9F | | | | 70.1F | | | | 0.0M |
| 15:13:00 | [illegible] | 74.6F | 74.6F | | 70.2F | 70.2F | 70.0F | | 69.0F | 68.8F | 68.7F | | | | | 76.7F |
| | | | | 79.6F | | | | 74.1F | | | | 70.5F | | | | 0.0M |

CRYOLAB' ROTARY BAYONET TEST -COLD-

| 0230 | 01 | 02 | 03 | 04 | 05 | 06 | 07 | 08 | 09 | 10 | 11 | 12 | 13 | 14 | 15 | 16 |
|---|---|---|---|---|---|---|---|---|---|---|---|---|---|---|---|---|
| 100 | TOP BAYONET | | | | MIDDLE BAYONET | | | | BOTTOM BAYONET | | | | | | | |
| 200 | 0 DEG | 120 DEG | 240 DEG | | 0 DEG | 120 DEG | 240 DEG | | 0 DEG | 120 DEG | 240 DEG | | | | | INSIDE |
| 300 | | | | AMBIENT | | | | AMBIENT | | | | AMBIENT | | | | DEWAR |
| 400 | | | | | | | | | | | | | | | | |
| 15:38:00 | 75.9F | 75.7F | 75.7F | | 70.4F | 70.3F | 70.1F | | 69.4F | 69.2F | 69.1F | | | | | 78.4F |
| | | | | 79.6F | | | | 74.1F | | | | 70.7F | | | | 0.0M |
| 16:03:00 | 76.8F | 76.6F | 76.6F | | 70.5F | 70.5F | 70.3F | | 69.8F | 69.6F | 69.5F | | | | | 79.8F |
| | | | | 80.1F | | | | 74.1F | | | | 71.1F | | | | 0.0M |
| 16:28:00 | 77.2F | 77.0F | 76.9F | | 70.9F | 70.8F | 70.6F | | 70.3F | 70.0F | 69.9F | | | | | 80.9F |
| | | | | 79.7F | | | | 74.3F | | | | 71.3F | | | | -0.1M |
| 16:53:00 | 77.7F | 77.6F | 77.5F | | 71.3F | 71.2F | 71.0F | | 70.5F | 70.3F | 70.2F | | | | | 81.9F |
| | | | | 79.2F | | | | 74.4F | | | | 71.4F | | | | -0.1M |
| 17:18:00 | 78.2F | 78.1F | 78.0F | | 71.7F | 71.6F | 71.4F | | 70.8F | 70.6F | 70.5F | | | | | 82.7F |
| | | | | 80.0F | | | | 74.6F | | | | 71.6F | | | | 0.0M |
| 17:43:00 | 78.6F | 78.5F | 78.4F | | 72.1F | 72.0F | 71.8F | | 71.0F | 70.8F | 70.8F | | | | | 83.4F |
| | | | | 79.5F | | | | 74.9F | | | | 71.7F | | | | 0.0M |
| 18:08:00 | 78.8F | 78.7F | 78.6F | | 72.4F | 72.3F | 72.1F | | 71.2F | 71.0F | 70.9F | | | | | 83.9F |
| | | | | 79.6F | | | | 74.9F | | | | 71.7F | | | | 0.1M |
| 18:33:00 | 78.9F | 78.8F | 78.8F | | 72.7F | 72.5F | 72.4F | | 71.3F | 71.1F | 71.1F | | | | | 84.2F |
| | | | | 79.8F | | | | 75.1F | | | | 71.7F | | | | 0.0M |
| 18:58:00 | 79.2F | 79.1F | 79.0F | | 73.0F | 72.8F | 72.6F | | 71.4F | 71.2F | 71.2F | | | | | 84.5F |
| | | | | 79.8F | | | | 75.0F | | | | 71.7F | | | | 0.0M |
| 19:23:00 | 79.3F | 79.2F | 79.1F | | 73.2F | 73.0F | 72.8F | | 71.5F | 71.3F | 71.3F | | | | | 84.8F |
| | | | | 79.5F | | | | .1F | | | | 71.8F | | | | -0.1M |

CRYOLAB ROTARY BAYONET TEST -COLD-

| 0230 | 01 | 02 | 03 | 04 | 05 | 06 | 07 | 08 | 09 | 10 | 11 | 12 | 13 | 14 | 15 | 16 |
|---|---|---|---|---|---|---|---|---|---|---|---|---|---|---|---|---|
| 100 | TOP BAYONET | | | | MIDDLE BAYONET | | | | BOTTOM BAYONET | | | | | | | |
| 200 | 0 DEG | 120 DEG | 240 DEG | | 0 DEG | 120 DEG | 240 DEG | | 0 DEG | 120 DEG | 240 DEG | | | | | INSIDE DEWAR |
| 300 | | | | AMBIENT | | | | AMBIENT | | | | AMBIENT | | | | |
| 400 | | | | | | | | | | | | | | | | |
| 19:48:00 | 79.3F | 79.3F | 79.2F | | 73.4F | 73.1F | 73.0F | | 71.6F | 71.4F | 71.4F | | | | | 84.9F |
| | | | | 79.2F | | | | 75.0F | | | | 71.8F | | | | -0.1M |
| 20:13:00 | 79.2F | 79.1F | 79.0F | | 73.5F | 73.3F | 73.1F | | 71.7F | 71.5F | 71.4F | | | | | 84.9F |
| | | | | 79.4F | | | | 75.2F | | | | 71.9F | | | | 0.0M |
| 20:38:00 | 79.2F | 79.1F | 79.0F | | 73.7F | 73.5F | 73.3F | | 71.8F | 71.6F | 71.6F | | | | | 85.0F |
| | | | | 79.1F | | | | 75.3F | | | | 72.0F | | | | 0.0M |
| 21:03:00 | 79.1F | 79.1F | 79.0F | | 73.9F | 73.6F | 73.5F | | 71.9F | 71.6F | 71.6F | | | | | 85.0F |
| | | | | 78.9F | | | | 75.3F | | | | 72.0F | | | | 0.0M |
| 21:28:00 | 79.2F | 79.2F | 79.0F | | 74.1F | 73.8F | 73.7F | | 71.9F | 71.7F | 71.6F | | | | | 85.1F |
| | | | | 79.4F | | | | 75.6F | | | | 72.0F | | | | 0.0M |
| 21:53:00 | 79.2F | 79.2F | 79.0F | | 74.2F | 73.9F | 73.8F | | 71.9F | 71.7F | 71.7F | | | | | 85.0F |
| | | | | 78.8F | | | | 75.4F | | | | 72.0F | | | | -0.1M |
| 22:18:00 | 79.1F | 79.0F | 78.9F | | 74.2F | 73.9F | 73.8F | | 71.9F | 71.7F | 71.7F | | | | | 84.9F |
| | | | | 78.7F | | | | 75.2F | | | | 72.0F | | | | 0.0M |
| 22:43:00 | 78.9F | 78.9F | 78.7F | | 74.2F | 73.9F | 73.8F | | 71.9F | 71.7F | 71.7F | | | | | 84.7F |
| | | | | 78.6F | | | | 75.0F | | | | 71.9F | | | | 0.0M |
| 23:08:00 | 78.8F | 78.7F | 78.6F | | 74.2F | 73.9F | 73.7F | | 71.9F | 71.7F | 71.6F | | | | | 84.5F |
| | | | | 78.5F | | | | 74.9F | | | | 71.8F | | | | -0.1M |
| 23:33:00 | 78.6F | 78.6F | 78.5F | | 74.1F | 73.8F | 73.7F | | 71.8F | 71.6F | 71.6F | | | | | 84.3F |
| | | | | 78.5F | | | | 75.0F | | | | 71.8F | | | | 0.0M |

CRYOLAB ROTARY BAYONET TEST -COLD-

| 0230 | 01 | 02 | 03 | 04 | 05 | 06 | 07 | 08 | 09 | 10 | 11 | 12 | 13 | 14 | 15 | 16 |
|---|---|---|---|---|---|---|---|---|---|---|---|---|---|---|---|---|
| 100 | TOP BAYONET | | | | MIDDLE BAYONET | | | | BOTTOM BAYONET | | | | | | | |
| 200 | 0 DEG | 120 DEG | 240 DEG | | 0 DEG | 120 DEG | 240 DEG | | 0 DEG | 120 DEG | 240 DEG | | | | | INSIDE |
| 300 | | | | AMBIENT | | | | AMBIENT | | | | AMBIENT | | | | DEWAR |
| 400 | | | | | | | | | | | | | | | | |
| 23:58:00 | 78.5F | 78.5F | 78.4F | | 74.2F | 73.9F | 73.8F | | 71.8F | 71.6F | 71.6F | | | | | 84.2F |
| | | | | 78.5F | | | | 75.1F | | | | 71.8F | | | | 0.0M |
| 00:23:00 | 78.6F | 78.5F | 78.4F | | 74.3F | 73.9F | 73.8F | | 71.8F | 71.6F | 71.6F | | | | | 84.1F |
| | | | | 78.4F | | | | 75.3F | | | | 71.9F | | | | 0.1M |
| 00:48:00 | 78.5F | 78.5F | 78.4F | | 74.3F | 74.0F | 73.9F | | 71.9F | 71.6F | 71.6F | | | | | 84.1F |
| | | | | 78.3F | | | | 75.4F | | | | 71.8F | | | | 0.0M |
| 01:13:00 | 78.6F | 78.6F | 78.5F | | 74.4F | 74.1F | 74.0F | | 71.9F | 71.6F | 71.6F | | | | | 84.2F |
| | | | | 78.8F | | | | 75.5F | | | | 71.8F | | | | -0.1M |
| 01:38:00 | 78.7F | 78.7F | 78.6F | | 74.5F | 74.2F | 74.1F | | 71.8F | 71.6F | 71.6F | | | | | 84.2F |
| | | | | 78.6F | | | | 75.6F | | | | 71.8F | | | | -0.1M |
| 02:03:00 | 78.8F | 78.8F | 78.7F | | 74.6F | 74.3F | 74.2F | | 71.9F | 71.7F | 71.7F | | | | | 84.2F |
| | | | | 78.5F | | | | 75.7F | | | | 71.9F | | | | 0.0M |
| 02:28:00 | 78.8F | 78.9F | 78.7F | | 74.7F | 74.3F | 74.3F | | 71.9F | 71.7F | 71.6F | | | | | 84.3F |
| | | | | 78.7F | | | | 75.6F | | | | 71.8F | | | | 0.0M |
| 02:53:00 | 78.9F | 79.0F | 78.8F | | 74.7F | 74.4F | 74.3F | | 71.9F | 71.7F | 71.6F | | | | | 84.3F |
| | | | | 78.6F | | | | 75.7F | | | | 71.8F | | | | 0.1M |
| 03:18:00 | 79.0F | 79.0F | 78.9F | | 74.8F | 74.5F | 74.3F | | 71.9F | 71.7F | 71.6F | | | | | 84.3F |
| | | | | 78.5F | | | | 75.7F | | | | 71.8F | | | | -0.1M |
| 03:43:00 | 79.1F | 79.1F | 79.0F | | 74.9F | 74.5F | 74.4F | | 71.8F | 71.6F | 71.6F | | | | | 84.3F |
| | | | | 78.8F | | | | [illegible].8F | | | | 71.8F | | | | 0.0M |

41

CRYOLAB ROTARY BAYONET TEST -COLD-

| 0231 | 01 | 02 | 03 | 04 | 05 | 06 | 07 | 08 | 09 | 10 | 11 | 12 | 13 | 14 | 15 | 16 |
|---|---|---|---|---|---|---|---|---|---|---|---|---|---|---|---|---|
| 100 | TOP BAYONET | | | | MIDDLE BAYONET | | | | BOTTOM BAYONET | | | | | | | |
| 200 | 0 DEG | 120 DEG | 240 DEG | | 0 DEG | 120 DEG | 240 DEG | | 0 DEG | 120 DEG | 240 DEG | | | | | INSIDE |
| 300 | | | | AMBIENT | | | | AMBIENT | | | | AMBIENT | | | | DEWAR |
| 400 | | | | | | | | | | | | | | | | |
| 04:08:00 | 79.2F | 79.2F | 79.1F | | 74.9F | 74.6F | 74.5F | | 71.8F | 71.6F | 71.6F | | | | | 84.3F |
| | | | | 79.0F | | | | 75.8F | | | | 71.8F | | | | 0.0M |
| 04:33:00 | 79.2F | 79.2F | 79.1F | | 74.9F | 74.6F | 74.5F | | 71.8F | 71.6F | 71.6F | | | | | 84.4F |
| | | | | 79.1F | | | | 75.8F | | | | 71.7F | | | | 0.1M |
| 04:58:00 | 79.4F | 79.4F | 79.3F | | 75.0F | 74.7F | 74.6F | | 71.8F | 71.6F | 71.6F | | | | | 84.4F |
| | | | | 79.8F | | | | 75.9F | | | | 71.8F | | | | -0.1M |
| 05:23:00 | 79.8F | 79.7F | 79.7F | | 75.1F | 74.8F | 74.7F | | 71.8F | 71.6F | 71.6F | | | | | 84.5F |
| | | | | 80.5F | | | | 75.9F | | | | 71.7F | | | | 0.0M |
| 05:48:00 | 79.9F | 79.9F | 79.8F | | 75.1F | 74.8F | 74.7F | | 71.8F | 71.6F | 71.5F | | | | | 84.7F |
| | | | | 80.0F | | | | 75.9F | | | | 71.6F | | | | 0.1M |
| 06:13:00 | 80.1F | 80.0F | 79.9F | | 75.1F | 74.8F | 74.7F | | 71.7F | 71.5F | 71.5F | | | | | 84.8F |
| | | | | 80.8F | | | | 75.9F | | | | 71.6F | | | | 0.0M |
| 06:38:00 | 80.3F | 80.2F | 80.1F | | 75.1F | 74.8F | 74.7F | | 71.6F | 71.5F | 71.4F | | | | | 84.9F |
| | | | | 81.3F | | | | 75.9F | | | | 71.6F | | | | 0.0M |
| 07:03:00 | 80.3F | 80.3F | 80.2F | | 75.1F | 74.8F | 74.7F | | 71.6F | 71.4F | 71.4F | | | | | 84.9F |
| | | | | 80.0F | | | | 75.9F | | | | 71.5F | | | | 0.0M |
| 07:28:00 | 80.2F | 80.2F | 80.1F | | 75.1F | 74.9F | 74.7F | | 71.6F | 71.4F | 71.4F | | | | | 84.8F |
| | | | | 79.9F | | | | 76.0F | | | | 71.5F | | | | 0.0M |
| 07:53:00 | 79.9F | 79.9F | 79.8F | | 75.1F | 74.8F | 74.7F | | 71.6F | 71.4F | 71.4F | | | | | 84.8F |
| | | | | 79.3F | | | | 75.7F | | | | 71.5F | | | | 0.0M |

TEMPERATURE RECORD AFTER FIRST
200 CYCLES

1

CRYOLAB ROTARY BAYONET TEST -COLD- AFTER 200 CYCLES

| 0232 | 01 | 02 | 03 | 04 | 05 | 06 | 07 | 08 | 09 | 10 | 11 | 12 | 13 | 14 | 15 | 16 |
|---|---|---|---|---|---|---|---|---|---|---|---|---|---|---|---|---|
| 100 | TOP BAYONET | | | | MIDDLE BAYONET | | | | BOTTOM BAYONET | | | | | | | |
| 200 | 0 DEG | 120 DEG | 240 DEG | | 0 DEG | 120 DEG | 240 DEG | | 0 DEG | 120 DEG | 240 DEG | | | | | INSIDE DEWAR |
| 300 | | | | AMBIENT | | | | AMBIENT | | | | AMBIENT | | | | |
| 400 | | | | | | | | | | | | | | | | |
| 10:54:00 | 80.3F | 80.2F | 80.3F | | 77.5F | 77.2F | 77.1F | | 75.1F | 74.9F | 74.9F | | START | | | 85.5F |
| | | | | 81.5F | | | | 78.6F | | | | 75.3F | | | | 0.0M |
| 10:59:00 | 80.3F | 80.2F | 80.3F | | 77.5F | 77.2F | 77.1F | | 75.1F | 75.0F | 74.9F | | | | | 65.8F |
| | | | | 80.9F | | | | 78.8F | | | | 75.6F | | | | 0.0M |
| 11:04:00 | 80.2F | 80.2F | 80.1F | | 77.8F | 77.5F | 77.4F | | 75.3F | 75.2F | 75.0F | | | | | -165.2F |
| | | | | 79.2F | | | | 78.9F | | | | 75.2F | | | | 0.0M |
| 11:09:00 | 80.0F | 80.1F | 80.2F | | 77.8F | 77.6F | 77.4F | | 75.4F | 75.1F | 75.0F | | | | | -276.6F |
| | | | | 78.4F | | | | 78.8F | | | | 74.9F | | | | 0.0M |
| 11:14:00 | 80.0F | 79.9F | 80.0F | | 77.6F | 77.5F | 77.3F | | 75.2F | 75.0F | 74.9F | | | | | -290.3F |
| | | | | 80.5F | | | | 78.8F | | | | 75.7F | | | | 0.0M |
| 11:19:00 | 79.8F | 79.7F | 79.9F | | 77.5F | 77.3F | 77.2F | | 75.2F | 75.0F | 74.9F | | | | | -279.0F |
| | | | | 80.5F | | | | 78.7F | | | | 75.0F | | | | 0.0M |
| 11:24:00 | 79.2F | 79.3F | 79.4F | | 77.4F | 77.3F | 77.1F | | 75.4F | 75.1F | 75.0F | | | | | -309.9F |
| | | | | 75.3F | | | | 78.7F | | | | 73.7F | | | | 0.0M |
| 11:29:00 | 79.1F | 79.0F | 79.3F | | 76.8F | 76.8F | 76.6F | | 75.2F | 74.9F | 74.8F | | | | | -297.3F |
| | | | | 80.3F | | | | 78.3F | | | | 75.8F | | | | 0.0M |
| 11:34:00 | 78.7F | 78.6F | 78.8F | | 76.4F | 76.5F | 76.3F | | 75.2F | 74.9F | 74.8F | | | | | -319.2F |
| | | | | 79.4F | | | | 78.5F | | | | 75.4F | | | | 0.0M |
| 11:39:00 | [illegible] | [illegible] | 78.1F | | 75.3F | 76.1F | 75.9F | | 75.2F | 75.0F | 74.9F | | | | | -318.8F |
| | | | | [illegible] | | | | 77.3F | | | | 74.9F | | | | 0.0M |

CRYOLAB ROTARY BAYONET TEST -COLD- AFTER 200 CYCLES

| 0304 | 01 | 02 | 03 | 04 | 05 | 06 | 07 | 08 | 09 | 10 | 11 | 12 | 13 | 14 | 15 | 16 |
|---|---|---|---|---|---|---|---|---|---|---|---|---|---|---|---|---|
| 100 | TOP BAYONET | | | | MIDDLE BAYONET | | | | BOTTOM BAYONET | | | | | | | |
| 200 | 0 DEG | 120 DEG | 240 DEG | | 0 DEG | 120 DEG | 240 DEG | | 0 DEG | 120 DEG | 240 DEG | | | | | |
| 300 | | | | AMBIENT | | | | AMBIENT | | | | AMBIENT | | | | INSIDE DEWAR |
| 400 | | | | | | | | | | | | | | | | |
| 11:44:00 | 77.7F | 77.8F | 77.9F | | 75.0F | 75.3F | 75.0F | | 75.1F | 74.8F | 74.6F | | | | | -314.3F |
| | | | | 78.8F | | | | 77.6F | | | | 75.4F | | | | 0.0M |
| 11:49:00 | 77.0F | 77.2F | 77.2F | | 74.1F | 74.5F | 74.3F | | 75.0F | 74.8F | 74.6F | | | | | -282.7F |
| | | | | 77.5F | | | | 76.5F | | | | 74.5F | | | | 0.0M |
| 11:54:00 | 76.8F | 76.7F | 76.3F | | 72.9F | 73.4F | 73.1F | | 74.7F | 74.4F | 74.2F | | | | | -292.0F |
| | | | | 79.0F | | | | 75.8F | | | | 74.1F | | | | 0.0M |
| 11:59:00 | 75.8F | 76.0F | 75.9F | | 71.8F | 72.4F | 72.1F | | 74.6F | 74.3F | 74.1F | | | | | -256.9F |
| | | | | 74.9F | | | | 75.5F | | | | 73.3F | | | | 0.0M |
| 12:04:00 | 75.4F | 75.3F | 75.5F | | 70.5F | 71.2F | 70.9F | | 74.3F | 74.0F | 73.8F | | | | | -306.1F |
| | | | | 77.7F | | | | 74.6F | | | | 74.1F | | | | 0.0M |
| 12:09:00 | 74.4F | 74.6F | 74.5F | | 69.4F | 70.0F | 69.8F | | 74.1F | 73.7F | 73.6F | | | | | -316.7F |
| | | | | 71.7F | | | | 74.0F | | | | 72.0F | | | | 0.0M |
| 12:14:00 | 73.9F | 73.8F | 74.0F | | 67.9F | 68.6F | 68.3F | | 73.4F | 73.2F | 73.0F | | | | | -301.9F |
| | | | | 77.3F | | | | 73.5F | | | | 73.8F | | | | 0.0M |
| 12:19:00 | 73.0F | 73.2F | 73.2F | | 66.8F | 67.5F | 67.2F | | 72.8F | 72.5F | 72.3F | | | | | -316.2F |
| | | | | 70.3F | | | | 73.2F | | | | 72.1F | | | | 0.1M |
| 12:24:00 | 72.8F | 72.7F | 72.8F | | 65.4F | 66.2F | 65.9F | | 71.8F | 71.4F | 71.2F | | | | | -307.8F |
| | | | | 76.8F | | | | 71.9F | | | | 73.5F | | | | 0.1M |
| 12:29:00 | 72.4F | 72.2F | 72.5F | | 64.2F | 65.0F | 64.7F | | 70.6F | 70.3F | 70.1F | | | | | -318.2F |
| | | | | 77.0F | | | | 3F | | | | 73.1F | | | | 0.1M |

CRYOLAB ROTARY BAYONET TEST -COLD- AFTER 200 CYCLES

| 0304 | 01 | 02 | 03 | 04 | 05 | 06 | 07 | 08 | 09 | 10 | 11 | 12 | 13 | 14 | 15 | 16 |
|---|---|---|---|---|---|---|---|---|---|---|---|---|---|---|---|---|
| 100 | TOP BAYONET | | | | MIDDLE BAYONET | | | | BOTTOM BAYONET | | | | | | | |
| 200 | 0 DEG | 120 DEG | 240 DEG | | 0 DEG | 120 DEG | 240 DEG | | 0 DEG | 120 DEG | 240 DEG | | | | | INSIDE |
| 300 | | | | AMBIENT | | | | AMBIENT | | | | AMBIENT | | | | DEWAR |
| 400 | | | | | | | | | | | | | | | | |
| 12:34:00 | 72.1F | 71.9F | 72.2F | | 63.1F | 63.9F | 63.6F | | 69.5F | 69.1F | 68.8F | | | | | -319.3F |
| | | | | 77.0F | | | | 71.2F | | | | 72.8F | | | | 0.1M |
| 12:39:00 | 71.8F | 71.6F | 72.0F | | 62.1F | 62.9F | 62.6F | | 68.3F | 67.9F | 67.6F | | | | | -320.1F |
| | | | | 76.9F | | | | 70.6F | | | | 72.6F | | | | -0.1M |
| 12:44:00 | 71.4F | 71.2F | 71.4F | | 61.1F | 62.0F | 61.6F | | 67.2F | 66.8F | 66.5F | | | | | -319.7F |
| | | | | 76.2F | | | | 70.2F | | | | 72.1F | | | | 0.0M |
| 12:49:00 | 71.3F | 70.9F | 70.9F | | 60.1F | 61.0F | 60.7F | | 66.2F | 65.8F | 65.5F | | | | | -319.4F |
| | | | | 72.1F | | | | 70.1F | | | | 71.0F | | | | 0.0M |
| 12:54:00 | 70.8F | 70.4F | 70.5F | | 59.3F | 60.0F | 59.8F | | 65.2F | 64.8F | 64.4F | | | | | -310.2F |
| | | | | 76.0F | | | | 69.5F | | | | 71.5F | | | | 0.0M |
| 12:59:00 | 70.3F | 69.9F | 70.0F | | 58.9F | 59.3F | 59.1F | | 64.5F | 64.0F | 63.7F | | | | | -312.5F |
| | | | | 75.6F | | | | 70.3F | | | | 71.9F | | | | -0.1M |
| 13:04:00 | 69.9F | 69.5F | 69.6F | | 58.3F | 58.8F | 58.3F | | 63.7F | 63.2F | 62.9F | | | | | -319.0F |
| | | | | 75.6F | | | | 69.5F | | | | 71.3F | | | | -0.1M |
| 13:09:00 | 69.6F | 69.2F | 69.2F | | 57.4F | 58.2F | 57.6F | | 63.0F | 62.5F | 62.3F | | | | | -319.8F |
| | | | | 74.9F | | | | 69.0F | | | | 70.9F | | | | 0.1M |
| 13:14:00 | 69.4F | 69.0F | 69.0F | | 56.8F | 57.6F | 57.1F | | 62.4F | 61.9F | 61.5F | | | | | -319.2F |
| | | | | 73.3F | | | | 68.3F | | | | 70.3F | | | | -0.1M |
| 13:19:00 | 69.0F | 68.7F | 68.7F | | 56.0F | 56.5F | 56.1F | | 61.7F | 60.6F | 60.6F | | | | | -309.3F |
| | | | | 75.0F | | | | 68.2F | | | | 71.8F | | | | 0.0M |

START motion
COUNTER -401

CRYOLAB ROTARY BAYONET TEST -COLD- AFTER 200 CYCLES

| 0304 | 01 | 02 | 03 | 04 | 05 | 06 | 07 | 08 | 09 | 10 | 11 | 12 | 13 | 14 | 15 | 16 |
|---|---|---|---|---|---|---|---|---|---|---|---|---|---|---|---|---|
| 100 | TOP BAYONET | | | | MIDDLE BAYONET | | | | BOTTOM BAYONET | | | | | | | |
| 200 | 0 DEG | 120 DEG | 240 DEG | | 0 DEG | 120 DEG | 240 DEG | | 0 DEG | 120 DEG | 240 DEG | | | | | INSIDE |
| 300 | | | | AMBIENT | | | | AMBIENT | | | | AMBIENT | | | | DEWAR |
| 400 | | | | | | | | | | | | | | | | |
| 13:24:00 | 68.8F | 68.4F | 68.4F | | 55.4F | 56.0F | 55.5F | | 61.0F | 60.3F | 59.9F | | | | | -319.5F |
| | | | | 75.0F | | | | 69.2F | | | | 70.5F | | | | 0.1M |
| 13:29:00 | 68.6F | 68.3F | 68.4F | | 54.7F | 55.3F | 54.9F | | 60.6F | 60.0F | 59.4F | | | | | -319.6F |
| | | | | 75.3F | | | | 68.0F | | | | 71.3F | | | | -0.1M |
| 13:34:00 | 68.5F | 68.2F | 68.5F | | 54.2F | 54.8F | 54.3F | | 60.3F | 59.5F | 59.1F | | | | | -319.6F |
| | | | | 74.9F | | | | 70.0F | | | | 72.6F | | | | 0.0M |
| 13:39:00 | 68.4F | 68.1F | 68.5F | | 53.5F | 54.2F | 53.6F | | 59.6F | 59.0F | 58.6F | | | | | -303.8F |
| | | | | 73.5F | | | | 68.5F | | | | 70.7F | | | | 0.1M |
| 13:44:00 | 68.5F | 68.0F | 68.3F | | 53.1F | 53.7F | 53.2F | | 59.4F | 58.7F | 58.3F | | | | | -284.2F |
| | | | | 71.9F | | | | 68.4F | | | | 71.4F | | | | 0.0M |
| 13:49:00 | 68.4F | 68.0F | 68.1F | | 52.7F | 53.3F | 52.7F | | 59.0F | 58.3F | 57.9F | | | | | -318.4F |
| | | | | 75.6F | | | | 69.2F | | | | 70.1F | | | | -0.1M |
| 13:54:00 | 68.3F | 67.9F | 68.0F | | 52.3F | 52.9F | 52.4F | | 58.6F | 58.1F | 57.5F | | | | | -319.1F |
| | | | | 75.3F | | | | 69.7F | | | | 70.8F | | | | 0.1M |
| 13:59:00 | 68.4F | 68.2F | 68.1F | | 51.4F | 52.8F | 51.9F | | 58.2F | 57.8F | 56.9F | | | | | -319.2F |
| | | | | 73.5F | | | | 63.1F | | | | 64.8F | | | | -0.1M |
| 14:04:00 | 68.2F | 68.0F | 67.9F | | 50.7F | 52.0F | 51.0F | | 57.6F | 57.1F | 56.2F | | | | | -308.6F |
| | | | | 73.5F | | | | 63.1F | | | | 64.3F | | | | 0.0M |
| 14:09:00 | 67.8F | 67.8F | 67.9F | | 50.2F | 51.6F | 50.6F | | 56.8F | 56.6F | 55.6F | | | | | -318.7F |
| | | | | 72.4F | | | | 8F | | | | 64.5F | | | | -0.1M |

CRYOLAB ROTARY BAYONET TEST -COLD- AFTER 200 CYCLES

| 0304 | 01 | 02 | 03 | 04 | 05 | 06 | 07 | 08 | 09 | 10 | 11 | 12 | 13 | 14 | 15 | 16 |
|---|---|---|---|---|---|---|---|---|---|---|---|---|---|---|---|---|
| 100 | TOP BAYONET | | | | MIDDLE BAYONET | | | | BOTTOM BAYONET | | | | | | | |
| 200 | 0 DEG | 120 DEG | 240 DEG | | 0 DEG | 120 DEG | 240 DEG | | 0 DEG | 120 DEG | 240 DEG | | | | | INSIDE |
| 300 | | | | AMBIENT | | | | AMBIENT | | | | AMBIENT | | | | DEWAR |
| 400 | | | | | | | | | | | | | | | | |
| 14:14:00 | 67.8F | 67.5F | 67.5F | | 49.4F | 51.0F | 49.7F | | 56.1F | 55.9F | 54.9F | | | | | -300.2F |
| | | | | 71.0F | | | | 60.4F | | | | 62.7F | | | | 0.0M |
| 14:19:00 | 67.4F | 67.3F | 67.3F | | 48.8F | 50.1F | 49.0F | | 55.3F | 54.9F | 54.1F | | | | | -319.1F |
| | | | | 72.3F | | | | 61.3F | | | | 61.2F | | | | 0.0M |
| 14:24:00 | 66.8F | 66.5F | 66.7F | | 48.4F | 49.1F | 48.5F | | 54.5F | 54.0F | 53.5F | | | | | -320.1F |
| | | | | 74.0F | | | | 64.2F | | | | 66.8F | | | | -0.1M |
| 14:29:00 | 66.8F | 66.4F | 66.5F | | 48.0F | 49.2F | 48.3F | | 54.4F | 54.3F | 53.4F | | | | | -309.3F |
| | | | | 75.2F | | | | 63.4F | | | | 68.4F | | | | 0.0M |
| 14:34:00 | 66.6F | 66.2F | 66.3F | | 47.8F | 49.3F | 48.2F | | 54.3F | 54.3F | 53.3F | | | | | -320.2F |
| | | | | 74.3F | | | | 64.5F | | | | 67.8F | | | | -0.1M |
| 14:39:00 | 66.5F | 66.2F | 66.4F | | 48.0F | 49.7F | 48.0F | | 54.2F | 53.8F | 53.3F | | | | | -319.7F |
| | | | | 73.6F | | | | 63.8F | | | | 67.5F | | | | 0.0M |
| 14:44:00 | 66.3F | 65.9F | 66.2F | | 47.9F | 48.9F | 48.0F | | 54.1F | 54.1F | 53.3F | | | | | -320.0F |
| | | | | 74.6F | | | | 65.1F | | | | 67.0F | | | | 0.0M |
| 14:49:00 | 66.2F | 65.7F | 65.9F | | 48.0F | 48.7F | 48.0F | | 54.1F | 53.7F | 53.2F | | | | | -319.9F |
| | | | | 74.6F | | | | 65.1F | | | | 66.6F | | | | 0.0M |
| 14:54:00 | 66.0F | 65.4F | 65.6F | | 47.9F | 48.4F | 47.7F | | 54.0F | 53.3F | 52.9F | | | | | -320.1F |
| | | | | 74.6F | | | | 65.2F | | | | 67.0F | | | | 0.1M |
| 14:59:00 | 65.7F | 65.2F | 65.3F | | 47.8F | 48.2F | 47.7F | | 53.8F | 53.2F | 52.8F | | | | | -319.8F |
| | | | | 74.1F | | | | 65.6F | | | | 66.3F | | | | -0.1M |

CRYOLAB ROTARY BAYONET TEST -COLD- AFTER 200 CYCLES

| 0304 | 01 | 02 | 03 | 04 | 05 | 06 | 07 | 08 | 09 | 10 | 11 | 12 | 13 | 14 | 15 | 16 |
|---|---|---|---|---|---|---|---|---|---|---|---|---|---|---|---|---|
| 100 | TOP BAYONET | | | | MIDDLE BAYONET | | | | BOTTOM BAYONET | | | | | | | |
| 200 | 0 DEG | 120 DEG | 240 DEG | | 0 DEG | 120 DEG | 240 DEG | | 0 DEG | 120 DEG | 240 DEG | | | | | INSIDE |
| 300 | | | | AMBIENT | | | | AMBIENT | | | | AMBIENT | | | | DEWAR |
| 400 | | | | | | | | | | | | | | | | |
| 15:04:00 | 65.5F | 65.0F | 65.1F | | 47.7F | 48.2F | 47.7F | | 53.7F | 53.1F | 52.7F | | | | | -314.2F |
| | | | | 74.4F | | | | 65.8F | | | | 68.0F | | | | 0.1M |
| 15:09:00 | 65.3F | 64.8F | 64.9F | | 47.7F | 48.2F | 47.7F | | 53.6F | 53.0F | 52.6F | | | | | -319.8F |
| | | | | 74.1F | | | | 65.2F | | | | 67.2F | | | | -0.1M |
| 15:14:00 | 65.0F | 64.4F | 64.7F | | 47.7F | 48.0F | 47.5F | | 53.5F | 52.8F | 52.4F | | | | | -317.2F |
| | | | | 73.4F | | | | 65.3F | | | | 67.3F | | | | 0.1M |
| 15:19:00 | 64.9F | 64.5F | 64.5F | | 47.4F | 48.7F | 47.6F | | 53.5F | 53.4F | 52.4F | | | | | -319.8F |
| | | | | 73.7F | | | | 63.5F | | | | 68.6F | | | | 0.1M |
| 15:24:00 | 64.8F | 64.4F | 64.3F | | 47.5F | 49.3F | 47.8F | | 53.6F | 53.8F | 52.5F | | | | | -319.8F |
| | | | | 73.1F | | | | 63.5F | | | | 68.6F | | | | -0.1M |
| 15:29:00 | 64.8F | 64.6F | 64.3F | | 48.0F | 49.6F | 48.3F | | 53.8F | 53.8F | 52.6F | | | | | -318.9F |
| | | | | 72.5F | | | | 63.8F | | | | 60.6F | | | | 0.1M |
| 15:34:00 | 64.5F | 64.1F | 64.1F | | 47.8F | 49.3F | 48.0F | | 53.6F | 53.7F | 52.5F | | | | | -319.6F |
| | | | | 74.0F | | | | 63.8F | | | | 67.8F | | | | 0.0M |
| 15:39:00 | 64.3F | 63.9F | 63.9F | | 47.7F | 49.6F | 48.2F | | 53.7F | 53.8F | 52.7F | | | | | -319.8F |
| | | | | 73.9F | | | | 63.4F | | | | 67.9F | | | | 0.0M |
| 15:44:00 | 64.0F | 63.7F | 63.8F | | 48.0F | 49.2F | 48.1F | | 53.7F | 53.4F | 52.7F | | | | | -319.9F |
| | | | | 72.5F | | | | 65.3F | | | | 67.2F | | | | 0.0M |
| 15:49:00 | 64.2F | 63.6F | 63.9F | | 48.1F | 48.8F | 48.0F | | 53.7F | 53.4F | 52.7F | | | | | -319.6F |
| | | | | 73.3F | | | | 6[illegible] F | | | | 67.5F | | | | 0.1M |

7

CRYOLAB ROTARY BAYONET TEST -COLD- AFTER 200 CYCLES

| 0304 | 01 | 02 | 03 | 04 | 05 | 06 | 07 | 08 | 09 | 10 | 11 | 12 | 13 | 14 | 15 | 16 |
|---|---|---|---|---|---|---|---|---|---|---|---|---|---|---|---|---|
| 100 | TOP BAYONET | | | | MIDDLE BAYONET | | | | BOTTOM BAYONET | | | | | | | |
| 200 | 0 DEG | 120 DEG | 240 DEG | | 0 DEG | 120 DEG | 240 DEG | | 0 DEG | 120 DEG | 240 DEG | | | | | |
| 300 | | | | AMBIENT | | | | AMBIENT | | | | AMBIENT | | | | INSIDE DEWAR |
| 400 | | | | | | | | | | | | | | | | |
| 15:54:00 | 64.1F | 63.5F | 63.6F | | 48.0F | 48.5F | 47.8F | | 53.6F | 53.0F | 52.5F | | | | | -320.0F |
| | | | | 74.0F | | | | 66.9F | | | | 67.3F | | | | 0.1M |
| 15:59:00 | 64.1F | 63.4F | 63.6F | | 48.0F | 48.4F | 47.7F | | 53.5F | 52.9F | 52.5F | | | | | -319.8F |
| | | | | 74.0F | | | | 66.4F | | | | 67.3F | | | | 0.0M |
| 16:04:00 | 64.0F | 63.4F | 63.5F | | 48.1F | 48.3F | 47.8F | | 53.6F | 52.8F | 52.5F | | | | | -320.0F |
| | | | | 73.6F | | | | 66.6F | | | | 67.5F | | | | 0.0M |
| 16:09:00 | 64.0F | 63.4F | 63.5F | | 47.9F | 48.3F | 47.8F | | 53.5F | 52.8F | 52.4F | | | | | -319.9F |
| | | | | 74.2F | | | | 66.3F | | | | 68.3F | | | | 0.1M |
| 16:14:00 | 64.0F | 63.3F | 63.5F | | 47.8F | 48.3F | 47.8F | | 53.4F | 52.9F | 52.4F | | | | | -319.8F |
| | | | | 74.0F | | | | 65.4F | | | | 67.5F | | | | 0.1M |
| 16:19:00 | 63.8F | 63.2F | 63.5F | | 47.8F | 48.1F | 47.7F | | 53.4F | 52.8F | 52.4F | | | | | -311.7F |
| | | | | 73.5F | | | | 65.7F | | | | 67.5F | | | | 0.0M |
| 16:24:00 | 63.9F | 63.3F | 63.5F | | 47.8F | 48.3F | 47.7F | | 53.3F | 52.8F | 52.3F | | | | | -319.7F |
| | | | | 73.6F | | | | 65.6F | | | | 67.1F | | | | -0.1M |
| 16:28:50 | 63.9F | 63.3F | 63.4F | | 47.7F | 48.5F | 47.7F | | 53.2F | 52.7F | 52.2F | | | | | -319.8F |
| | | | | 74.4F | | | | 64.9F | | | | 67.4F | | | | 0.0M |
| 07:35:46 | 62.2F | 61.5F | 61.8F | | 47.0F | 47.5F | 46.9F | | 48.5F | 47.9F | 47.4F | | | | | -320.0F |
| | | | | 72.8F | | | | 63.8F | | | | 62.3F | | | | 0.0M |
| 07:41:00 | 62.3F | 61.6F | 61.9F | | 47.1F | 47.8F | 47.1F | | 48.8F | 48.2F | 47.7F | | | | | -319.6F |
| | | | | 72.3F | | | | 65.0F | | | | 62.5F | | | | 0.0M |

CRYOLAB ROTARY BAYONET TEST -COLD- AFTER 200 CYCLES

| 1305 | 01 | 02 | 03 | 04 | 05 | 06 | 07 | 08 | 09 | 10 | 11 | 12 | 13 | 14 | 15 | 16 |
|---|---|---|---|---|---|---|---|---|---|---|---|---|---|---|---|---|
| 00 | TOP BAYONET | | | | MIDDLE BAYONET | | | | BOTTOM BAYONET | | | | | | | |
| 00 | 0 DEG | 120 DEG | 240 DEG | | 0 DEG | 120 DEG | 240 DEG | | 0 DEG | 120 DEG | 240 DEG | | | | | INSIDE |
| 00 | | | | AMBIENT | | | | AMBIENT | | | | AMBIENT | | | | DEWAR |
| 00 | | | | | | | | | | | | | | | | |
| 7:52:00 | 62.1F | 61.5F | 61.7F | | 47.2F | 47.5F | 47.0F | | 48.8F | 48.1F | 47.7F | | | | | -319.6F |
| | | | | 72.2F | | | | 63.9F | | | | 63.6F | | | | 0.0M |
| 7:57:00 | 62.1F | 61.4F | 61.5F | | 47.2F | 47.6F | 47.0F | | 48.9F | 48.3F | 47.7F | | | | | -320.1F |
| | | | | 72.9F | | | | 64.7F | | | | 63.6F | | | | 0.0M |
| 8:02:00 | 62.1F | 61.4F | 61.4F | | 47.2F | 47.7F | 46.9F | | 48.9F | 48.2F | 47.7F | | | | | -320.1F |
| | | | | 72.8F | | | | 64.5F | | | | 63.0F | | | | 0.0M |
| 8:07:00 | 62.0F | 61.4F | 61.6F | | 47.2F | 47.8F | 47.1F | | 49.1F | 48.4F | 47.9F | | | | | -320.0F |
| | | | | 72.0F | | | | 64.3F | | | | 63.8F | | | | 0.1M |
| 8:12:00 | 62.0F | 61.4F | 61.5F | | 47.4F | 47.7F | 47.1F | | 49.1F | 48.4F | 47.9F | | | | | -320.0F |
| | | | | 72.6F | | | | 64.8F | | | | 64.7F | | | | 0.0M |
| 8:17:00 | 62.0F | 61.3F | 61.4F | | 47.2F | 47.8F | 47.1F | | 49.1F | 48.4F | 48.0F | | | | | -320.1F |
| | | | | 71.9F | | | | 62.9F | | | | 64.5F | | | | 0.0M |
| 8:17:23A | 62.0F | 61.3F | 61.4F | | 47.2F | 47.9F | 47.1F | | 49.1F | 48.4F | 48.0F | | | | | -320.1F |
| | | | | 72.2F | | | | 62.4F | | | | 64.6F | | | | 0.1M+ |
| 8:22:00 | 62.0F | 61.2F | 61.3F | | 47.2F | 47.7F | 47.1F | | 49.0F | 48.4F | 47.9F | | | | | -320.1F |
| | | | | 72.3F | | | | 64.6F | | | | 63.5F | | | | 0.0M |
| 8:22:50A | 61.9F | 61.2F | 61.2F | | 47.2F | 47.7F | 47.1F | | 49.1F | 48.4F | 47.9F | | | | | -320.1F |
| | | | | 72.0F | | | | 64.3F | | | | 64.3F | | | | 805.2M+ |
| 8:27:00 | 61.9F | 61.2F | 61.4F | | 47.3F | 47.9F | 47.3F | | 49.4F | 48.7F | 48.4F | | | | | -319.4F |
| | | | | 71.3F | | | | 64.[illegible] | | | | 65.6F | | | | 0.0M |

CRYOLAB ROTARY BAYONET TEST -COLD- AFTER 200 CYCLES

| 0305 | 01 | 02 | 03 | 04 | 05 | 06 | 07 | 08 | 09 | 10 | 11 | 12 | 13 | 14 | 15 | 16 |
|---|---|---|---|---|---|---|---|---|---|---|---|---|---|---|---|---|
| 00 | TOP BAYONET | | | | MIDDLE BAYONET | | | | BOTTOM BAYONET | | | | | | | |
| 200 | 0 DEG | 120 DEG | 240 DEG | | 0 DEG | 120 DEG | 240 DEG | | 0 DEG | 120 DEG | 240 DEG | | | | | |
| 00 | | | | AMBIENT | | | | AMBIENT | | | | AMBIENT | | | | INSIDE DEWAR |
| 00 | | | | | | | | | | | | | | | | |
| 08:32:00 | 61.7F | 60.9F | 61.0F | | 47.3F | 47.8F | 47.2F | | 49.4F | 48.7F | 48.3F | | | | | -320.1F |
| | | | | 71.6F | | | | 62.9F | | | | 65.6F | | | | 0.0M |
| 08:37:00 | 61.6F | 60.9F | 61.1F | | 47.2F | 47.8F | 47.1F | | 49.4F | 48.8F | 48.4F | | | | | -320.1F |
| | | | | 72.2F | | | | 63.3F | | | | 65.2F | | | | 0.0M |
| 08:42:00 | 61.7F | 61.2F | 61.2F | | 47.2F | 47.8F | 47.3F | | 49.5F | 48.9F | 48.8F | | | | | -320.2F |
| | | | | 72.3F | | | | 65.0F | | | | 66.4F | | | | 0.0M |
| 08:47:00 | 61.8F | 61.5F | 61.4F | | 47.3F | 47.8F | 47.4F | | 49.6F | 49.0F | 48.8F | | | | | -320.1F |
| | | | | 72.5F | | | | 65.1F | | | | 65.6F | | | | 0.0M |
| 08:52:00 | 62.1F | 61.8F | 61.7F | | 47.3F | 48.4F | 47.7F | | 49.9F | 49.5F | 49.0F | | | | | -319.8F |
| | | | | 72.3F | | | | 64.6F | | | | 67.1F | | | | 0.0M |
| 08:57:00 | 62.1F | 61.9F | 62.0F | | 47.3F | 48.8F | 47.8F | | 50.1F | 49.7F | 49.2F | | | | | -320.1F |
| | | | | 72.3F | | | | 63.0F | | | | 66.7F | | | | 0.0M |
| 09:02:00 | 62.3F | 62.0F | 61.9F | | 47.4F | 49.2F | 47.9F | | 50.4F | 50.1F | 49.4F | | | | | -320.1F |
| | | | | 73.1F | | | | 62.4F | | | | 66.7F | | | | 0.1M |
| 09:07:00 | 62.4F | 62.0F | 61.8F | | 47.7F | 49.5F | 48.1F | | 50.5F | 50.3F | 49.6F | | | | | -320.1F |
| | | | | 72.6F | | | | 64.5F | | | | 66.7F | | | | 0.1M |
| 09:12:00 | 62.4F | 62.0F | 61.7F | | 47.8F | 49.7F | 48.3F | | 50.7F | 50.3F | 49.7F | | | | | -320.2F |
| | | | | 73.9F | | | | 63.3F | | | | 66.9F | | | | 98.7M |
| 09:14:48A | 62.6F | 62.2F | 62.0F | | 48.0F | 49.8F | 48.5F | | 50.9F | 50.5F | 50.0F | | | | | -319.7F |
| | | | | 71.8F | | | | 63.8F | | | | 67.0F | | | | 5097.3M* |
| | | | [illegible] | | 48.1F | 49.4F | 48.5F | | 50.8F | 50.3F | 49.9F | | | | | -319.8F |

10

CRYOLAB ROTARY BAYONET TEST -COLD- AFTER 200 CYCLES

| 0305 | 01 | 02 | 03 | 04 | 05 | 06 | 07 | 08 | 09 | 10 | 11 | 12 | 13 | 14 | 15 | 16 |
|---|---|---|---|---|---|---|---|---|---|---|---|---|---|---|---|---|
| 100 | TOP BAYONET | | | | MIDDLE BAYONET | | | | BOTTOM BAYONET | | | | | | | |
| 200 | 0 DEG | 120 DEG | 240 DEG | | 0 DEG | 120 DEG | 240 DEG | | 0 DEG | 120 DEG | 240 DEG | | | | | INSIDE |
| 300 | | | | AMBIENT | | | | AMBIENT | | | | AMBIENT | | | | DEWAR |
| 400 | | | | | | | | | | | | | | | | |
| 09:17:20A | 62.6F | 62.1F | 62.0F | | 48.2F | 49.1F | 48.3F | | 50.7F | 50.2F | 49.7F | | | | | -320.0F |
| | | | | 72.9F | | | | 64.9F | | | | 65.0F | | | | 5107.8M* |
| 09:25:39A | 62.6F | 62.0F | 62.4F | | 48.3F | 48.7F | 48.2F | | 50.8F | 50.0F | 49.7F | | | | | -320.0F |
| | | | | 73.1F | | | | 64.2F | | | | 64.9F | | | | 5106.5M* |
| 09:31:52A | 62.6F | 62.3F | 62.4F | | 48.1F | 48.7F | 48.2F | | 50.7F | 49.9F | 49.7F | | | | | -319.9F |
| | | | | 72.8F | | | | 64.5F | | | | 65.8F | | | | 5105.9M* |
| 09:39:06A | 62.3F | 62.4F | 62.4F | | 48.0F | 48.7F | 48.1F | | 50.8F | 50.1F | 49.8F | | | | | -254.2F |
| | | | | 72.6F | | | | 63.6F | | | | 65.1F | | | | 5105.6M* |
| 09:44:45A | 62.8F | 62.4F | 62.5F | | 48.1F | 48.5F | 48.0F | | 50.7F | 50.0F | 49.5F | | | | | -320.0F |
| | | | | 73.0F | | | | 65.4F | | | | 64.3F | | | | 5105.3M* |
| 09:50:23A | 62.8F | 62.3F | 62.3F | | 48.1F | 48.5F | 47.9F | | 50.5F | 49.8F | 49.4F | | | | | -320.0F |
| | | | | 73.1F | | | | 64.4F | | | | 64.5F | | | | 5105.1M* |
| 09:56:03A | 62.7F | 62.2F | 62.0F | | 47.9F | 48.4F | 47.8F | | 50.4F | 49.8F | 49.3F | | | | | -320.0F |
| | | | | 72.7F | | | | 64.1F | | | | 64.3F | | | | 5105.0M* |
| 10:01:42A | 62.7F | 62.3F | 62.0F | | 47.8F | 48.2F | 47.7F | | 50.3F | 49.6F | 49.1F | | | | | -320.0F |
| | | | | 73.0F | | | | 64.9F | | | | 64.8F | | | | 5104.7M* |
| 10:07:21A | 62.7F | 62.4F | 62.2F | | 47.6F | 48.3F | 47.6F | | 50.4F | 49.7F | 49.4F | | | | | -319.9F |
| | | | | 73.4F | | | | 64.0F | | | | 66.1F | | | | 5104.6M* |
| 10:13:01A | 62.8F | 62.4F | 62.2F | | 47.4F | 48.6F | 47.7F | | 50.5F | 49.8F | 49.8F | | | | | -320.3F |
| | | | | 73.2F | | | | 63.6F | | | | 67.8F | | | | 5104.3M* |

CRYOLAB ROTARY BAYONET TEST -COLD- AFTER 200 CYCLES

| 305 00 00 00 00 | 01 | 02 | 03 | 04 | 05 | 06 | 07 | 08 | 09 | 10 | 11 | 12 | 13 | 14 | 16 |
|---|---|---|---|---|---|---|---|---|---|---|---|---|---|---|---|
| | TOP BAYONET | | | | MIDDLE BAYONET | | | | BOTTOM BAYONET | | | | | | |
| | 0 DEG | 120 DEG | 240 DEG | | 0 DEG | 120 DEG | 240 DEG | | 0 DEG | 120 DEG | 240 DEG | | | | INSIDE DEWAR |
| | | | | AMBIENT | | | | AMBIENT | | | | AMBIENT | | | |
| 0:18:40A | 62.8F | 62.5F | 62.4F | | 47.5F | 48.8F | 47.8F | | 50.8F | 50.0F | 49.9F | | | | -320.1F |
| | | | | 73.3F | | | | 63.3F | | | | 66.3F | | | 5104.0M* |
| 0:24:20A | 62.9F | 62.5F | 62.3F | | 47.6F | 48.4F | 47.7F | | 50.6F | 50.0F | 49.6F | | | | -320.2F |
| | | | | 73.1F | | | | 64.0F | | | | 64.7F | | | 5103.8M* |
| 0:29:58A | 62.9F | 62.7F | 62.6F | | 47.7F | 48.2F | 47.6F | | 50.5F | 49.9F | 49.6F | | | | -196.8F |
| | | | | 73.2F | | | | 63.9F | | | | 64.5F | | | 5103.8M* |
| 0:35:37A | 63.1F | 62.8F | 62.8F | | 47.6F | 48.1F | 47.7F | | 50.5F | 50.0F | 49.5F | | | | -320.0F |
| | | | | 73.5F | | | | 64.8F | | | | 64.3F | | | 5103.6M* |
| 0:41:16A | 63.1F | 62.7F | 62.6F | | 47.5F | 48.0F | 47.5F | | 50.5F | 50.0F | 49.4F | | | | -320.1F |
| | | | | 72.7F | | | | 64.5F | | | | 64.2F | | | 5103.4M* |
| 0:46:56A | 63.0F | 62.6F | 62.6F | | 47.2F | 48.1F | 47.3F | | 50.6F | 49.9F | 49.5F | | | | -320.1F |
| | | | | 72.9F | | | | 62.7F | | | | 67.2F | | | 5103.5M* |
| 0:52:35A | 62.9F | 62.5F | 62.5F | | 47.3F | 48.3F | 47.5F | | 50.7F | 50.0F | 49.9F | | | | -320.2F |
| | | | | 72.5F | | | | 64.5F | | | | 68.0F | | | 5103.2M* |
| 0:58:15A | 63.0F | 62.5F | 62.5F | | 47.2F | 48.1F | 47.4F | | 50.9F | 50.3F | 49.9F | | | | -319.8F |
| | | | | 72.7F | | | | 64.6F | | | | 64.9F | | | 5103.1M* |
| 1:03:55A | 62.8F | 62.3F | 62.4F | | 47.2F | 47.8F | 47.3F | | 50.8F | 50.2F | 49.7F | | | | -320.1F |
| | | | | 72.5F | | | | 67.0F | | | | 65.3F | | | 5103.0M* |
| 1:09:34A | 62.8F | 62.2F | 62.4F | | 47.1F | 47.3F | 47.2F | | 51.0F | 50.3F | 49.9F | | | | -319.7F |
| | | | | 72.7F | | | | 68.0F | | | | 66.8F | | | 5102.9M* |

CRYOLAB ROTARY BAYONET TEST -COLD- AFTER 200 CYCLES

| 0305 | 01 | 02 | 03 | 04 | 05 | 06 | 07 | 08 | 09 | 10 | 11 | 12 | 13 | 14 | 15 | 16 |
|---|---|---|---|---|---|---|---|---|---|---|---|---|---|---|---|---|
| 100 | TOP BAYONET | | | | MIDDLE BAYONET | | | | BOTTOM BAYONET | | | | | | | |
| 200 | 0 DEG | 120 DEG | 240 DEG | | 0 DEG | 120 DEG | 240 DEG | | 0 DEG | 120 DEG | 240 DEG | | | | | INSIDE |
| 300 | | | | AMBIENT | | | | AMBIENT | | | | AMBIENT | | | | DEWAR |
| 400 | | | | | | | | | | | | | | | | |
| 11:15:13A | 62.7F | 62.3F | 62.4F | | 47.1F | 48.1F | 47.2F | | 51.1F | 50.3F | 50.1F | | | | | -320.2F |
| | | | | 72.8F | | | | 67.2F | | | | 67.0F | | | | 5102.8M* |
| 11:20:51A | 62.7F | 62.2F | 62.3F | | 47.0F | 47.8F | 47.1F | | 51.0F | 50.5F | 50.0F | | | | | -320.1F |
| | | | | 72.4F | | | | 66.9F | | | | 65.6F | | | | 5102.6M* |
| 11:26:31A | 62.7F | 62.2F | 62.5F | | 47.0F | 47.7F | 47.1F | | 51.1F | 50.4F | 49.9F | | | | | -320.0F |
| | | | | 72.4F | | | | 67.6F | | | | 65.8F | | | | 5102.6M* |
| 11:32:10A | 62.6F | 62.2F | 62.4F | | 46.9F | 47.6F | 46.9F | | 51.0F | 50.2F | 49.8F | | | | | -320.1F |
| | | | | 72.8F | | | | 67.2F | | | | 65.1F | | | | 5102.6M* |
| 11:37:50A | 62.6F | 62.2F | 62.4F | | 46.9F | 47.7F | 46.9F | | 51.0F | 50.3F | 49.9F | | | | | -320.0F |
| | | | | 72.5F | | | | 67.9F | | | | 65.2F | | | | 5102.5M* |
| 11:43:29A | 62.5F | 62.2F | 62.3F | | 46.9F | 47.5F | 46.9F | | 51.0F | 50.1F | 49.8F | | | | | -320.0F |
| | | | | 72.1F | | | | 67.8F | | | | 64.8F | | | | 5102.4M* |
| 11:49:09A | 62.7F | 62.3F | 62.5F | | 46.8F | 47.7F | 46.9F | | 51.1F | 50.5F | 49.9F | | | | | -319.5F |
| | | | | 71.9F | | | | 67.0F | | | | 65.5F | | | | 5102.4M* |
| 11:54:48A | 62.5F | 62.1F | 62.4F | | 46.8F | 47.4F | 46.8F | | 51.0F | 50.2F | 49.8F | | | | | -320.0F |
| | | | | 72.4F | | | | 67.5F | | | | 65.1F | | | | 5102.4M* |
| 12:00:28A | 62.6F | 62.2F | 62.4F | | 46.8F | 47.4F | 46.8F | | 51.0F | 50.2F | 49.8F | | | | | -320.1F |
| | | | | 72.8F | | | | 67.9F | | | | 65.0F | | | | 5102.4M* |
| 12:06:07A | 62.6F | 62.2F | 62.4F | | 46.7F | 47.4F | 46.8F | | 51.0F | 50.2F | 49.7F | | | | | -320.0F |
| | | | | 72.5F | | | | 67.0F | | | | 64.8F | | | | 5102.4M* |

13 CRYOLAB ROTARY BAYONET TEST -COLD- AFTER 200 CYCLES

| 0305 | 01 | 02 | 03 | 04 | 05 | 06 | 07 | 08 | 09 | 10 | 11 | 12 | 13 | 14 | 15 | 16 |
|---|---|---|---|---|---|---|---|---|---|---|---|---|---|---|---|---|
| 100 | TOP BAYONET | | | | MIDDLE BAYONET | | | | BOTTOM BAYONET | | | | | | | |
| 200 | 0 DEG | 120 DEG | 240 DEG | | 0 DEG | 120 DEG | 240 DEG | | 0 DEG | 120 DEG | 240 DEG | | | | | INSIDE |
| 300 | | | | AMBIENT | | | | AMBIENT | | | | AMBIENT | | | | DEWAR |
| 400 | | | | | | | | | | | | | | | | |
| 12:11:47A | 62.6F | 62.1F | 62.4F | | 46.7F | 47.3F | 46.7F | | 50.8F | 50.1F | 49.8F | | | | | -319.9F |
| | | | | 72.5F | | | | 67.1F | | | | 65.9F | | | | 5102.3M+ |
| 12:17:24A | 62.6F | 62.3F | 62.6F | | 46.6F | 47.2F | 46.6F | | 50.9F | 50.2F | 49.9F | | | | | -319.8F |
| | | | | 72.4F | | | | 67.1F | | | | 66.3F | | | | 5102.3M+ |
| 12:23:04A | 62.7F | 62.2F | 62.5F | | 46.5F | 47.0F | 46.6F | | 50.9F | 50.0F | 49.7F | | | | | -320.1F |
| | | | | 72.6F | | | | 66.4F | | | | 65.9F | | | | 5102.1M+ |
| 12:28:43A | 62.8F | 62.5F | 62.7F | | 46.5F | 47.1F | 46.6F | | 50.8F | 50.1F | 49.7F | | | | | -319.8F |
| | | | | 72.7F | | | | 67.1F | | | | 65.4F | | | | 5102.2M+ |
| 12:34:23A | 62.7F | 62.4F | 62.6F | | 46.5F | 47.0F | 46.5F | | 50.7F | 49.9F | 49.5F | | | | | -320.1F |
| | | | | 72.4F | | | | 67.9F | | | | 64.4F | | | | 5102.2M+ |
| 12:40:03A | 62.9F | 62.4F | 62.6F | | 46.4F | 47.2F | 46.5F | | 50.6F | 50.0F | 49.5F | | | | | -249.8F |
| | | | | 73.7F | | | | 66.3F | | | | 64.4F | | | | 5102.2M+ |
| 12:45:42A | 62.8F | 62.4F | 62.6F | | 46.4F | 47.0F | 46.4F | | 50.5F | 49.9F | 49.4F | | | | | -320.0F |
| | | | | 72.9F | | | | 66.8F | | | | 64.6F | | | | 5102.1M+ |
| 12:51:21A | 62.8F | 62.4F | 62.6F | | 46.3F | 46.9F | 46.4F | | 50.5F | 49.8F | 49.4F | | | | | -320.0F |
| | | | | 72.5F | | | | 66.6F | | | | 65.2F | | | | 5102.1M+ |
| 12:57:01A | 62.8F | 62.6F | 62.8F | | 46.4F | 46.9F | 46.4F | | 50.4F | 49.8F | 49.4F | | | | | -320.0F |
| | | | | 72.8F | | | | 67.2F | | | | 64.0F | | | | 5102.1M+ |
| 13:02:40A | 62.9F | 62.5F | 62.7F | | 46.4F | 46.9F | 46.3F | | 50.4F | 49.8F | 49.3F | | | | | -320.1F |
| | | | | 73.2F | | | | 68.0F | | | | 64.5F | | | | 5102.0M+ |

14

CRYOLAB ROTARY BAYONET TEST -COLD- AFTER 200 CYCLES

| 0305 | 01 | 02 | 03 | 04 | 05 | 06 | 07 | 08 | 09 | 10 | 11 | 12 | 13 | 14 | 15 | 16 |
|---|---|---|---|---|---|---|---|---|---|---|---|---|---|---|---|---|
| 100 | TOP BAYONET | | | | MIDDLE BAYONET | | | | BOTTOM BAYONET | | | | | | | |
| 200 | 0 DEG | 120 DEG | 240 DEG | | 0 DEG | 120 DEG | 240 DEG | | 0 DEG | 120 DEG | 240 DEG | | | | | INSIDE |
| 300 | | | | AMBIENT | | | | AMBIENT | | | | AMBIENT | | | | DEWAR |
| 400 | | | | | | | | | | | | | | | | |
| 13:08:20A | 63.0F | 62.7F | 62.9F | | 46.3F | 47.0F | 46.4F | | 50.5F | 49.9F | 49.4F | | | | | -319.8F |
| | | | | 72.6F | | | | 67.1F | | | | 65.0F | | | | 5102.0M* |
| 13:13:58A | 63.0F | 62.6F | 62.9F | | 46.4F | 47.0F | 46.4F | | 50.5F | 49.9F | 49.4F | | | | | -320.0F |
| | | | | 72.9F | | | | 67.9F | | | | 65.0F | | | | 5102.1M* |
| 13:19:37A | 63.1F | 62.7F | 62.9F | | 46.4F | 47.1F | 46.5F | | 50.7F | 50.0F | 49.7F | | | | | -319.6F |
| | | | | 73.6F | | | | 67.8F | | | | 67.8F | | | | 5102.1M* |
| 13:25:16A | 63.0F | 62.6F | 62.8F | | 46.3F | 47.1F | 46.9F | | 50.8F | 49.9F | 50.0F | | | | | -320.2F |
| | | | | 73.5F | | | | 68.1F | | | | 69.2F | | | | 5101.7M* |
| 13:30:56A | 63.0F | 62.6F | 62.7F | | 46.3F | 47.0F | 46.7F | | 50.9F | 50.1F | 49.9F | | | | | -320.1F |
| | | | | 73.0F | | | | 67.4F | | | | 66.3F | | | | 5101.8M* |
| 13:36:36A | 63.1F | 62.7F | 62.9F | | 46.3F | 47.1F | 46.6F | | 51.0F | 50.2F | 50.0F | | | | | -320.1F |
| | | | | 73.2F | | | | 67.2F | | | | 66.8F | | | | 5101.7M* |
| 13:42:15A | 63.0F | 62.5F | 62.7F | | 46.6F | 47.1F | 46.6F | | 51.2F | 50.2F | 50.0F | | | | | -320.1F |
| | | | | 73.2F | | | | 69.2F | | | | 68.2F | | | | 5101.6M* |
| 13:47:55A | 63.1F | 62.6F | 62.8F | | 46.4F | 47.1F | 46.7F | | 51.3F | 50.4F | 50.2F | | | | | -320.0F |
| | | | | 73.2F | | | | 67.2F | | | | 67.9F | | | | 5101.5M* |
| 13:53:34A | 63.0F | 62.5F | 62.6F | | 46.3F | 47.0F | 46.5F | | 51.3F | 50.3F | 50.3F | | | | | -320.1F |
| | | | | 72.8F | | | | 67.5F | | | | 67.9F | | | | 5101.5M* |
| 13:59:13A | 63.0F | 62.6F | 62.8F | | 46.3F | 47.0F | 46.6F | | 51.4F | 50.6F | 50.5F | | | | | -320.0F |
| | | | | 73.9F | | | | 67.7F | | | | 68.7F | | | | 5101.4M* |

15 ) CRYOLAB ROTARY BAYONET TEST -COLD- AFTER 200 CYCLES )

| 0305 | 01 | 02 | 03 | 04 | 05 | 06 | 07 | 08 | 09 | 10 | 11 | 12 | 13 | 14 | 15 | 16 |
|---|---|---|---|---|---|---|---|---|---|---|---|---|---|---|---|---|
| 100 | TOP BAYONET | | | | MIDDLE BAYONET | | | | BOTTOM BAYONET | | | | | | | |
| 200 | 0 DEG | 120 DEG | 240 DEG | | 0 DEG | 120 DEG | 240 DEG | | 0 DEG | 120 DEG | 240 DEG | | | | | INSIDE |
| 300 | | | | AMBIENT | | | | AMBIENT | | | | AMBIENT | | | | DEWAR |
| 400 | | | | | | | | | | | | | | | | |
| 14:04:51A | 63.0F | 62.6F | 62.6F | | 46.3F | 47.0F | 46.6F | | 51.5F | 50.6F | 50.4F | | | | | -320.1F |
| | | | | 72.7F | | | | 67.9F | | | | 66.1F | | | | 5101.2M* |
| 14:10:31A | 63.1F | 62.7F | 62.9F | | 46.6F | 47.2F | 46.6F | | 51.4F | 50.8F | 50.4F | | | | | -319.5F |
| | | | | 73.2F | | | | 67.7F | | | | 65.7F | | | | 5101.3M* |
| 14:16:10A | 63.0F | 62.6F | 62.7F | | 46.3F | 47.0F | 46.5F | | 51.3F | 50.5F | 50.4F | | | | | -320.2F |
| | | | | 73.2F | | | | 67.2F | | | | 68.1F | | | | 5101.3M* |
| 14:21:50A | 63.0F | 62.6F | 62.7F | | 46.1F | 46.9F | 46.5F | | 51.4F | 50.6F | 50.5F | | | | | -320.1F |
| | | | | 73.7F | | | | 67.4F | | | | 67.5F | | | | 5101.2M* |
| 14:27:29A | 63.2F | 62.8F | 62.9F | | 46.2F | 46.9F | 46.5F | | 51.6F | 50.8F | 50.7F | | | | | -320.1F |
| | | | | 73.6F | | | | 67.3F | | | | 69.0F | | | | 5101.2M* |
| 14:33:09A | 63.1F | 62.7F | 62.9F | | 46.1F | 46.9F | 46.5F | | 51.6F | 50.8F | 50.7F | | | | | -320.3F |
| | | | | 73.5F | | | | 67.4F | | | | 68.4F | | | | 5101.1M* |
| 14:38:48A | 63.2F | 62.8F | 62.9F | | 46.1F | 46.9F | 46.6F | | 51.9F | 51.0F | 51.0F | | | | | -320.0F |
| | | | | 73.3F | | | | 67.1F | | | | 69.3F | | | | 5101.0M* |
| 14:44:28A | 63.1F | 62.7F | 62.8F | | 46.1F | 46.9F | 46.6F | | 51.8F | 51.0F | 50.9F | | | | | -320.2F |
| | | | | 73.3F | | | | 67.0F | | | | 68.0F | | | | 5101.0M* |
| 14:50:05A | 63.4F | 62.8F | 62.9F | | 46.3F | 47.2F | 46.7F | | 52.0F | 51.3F | 51.1F | | | | | -319.8F |
| | | | | 73.4F | | | | 67.8F | | | | 68.2F | | | | 5101.0M* |
| 14:55:45A | 63.2F | 62.7F | 62.9F | | 46.3F | 47.1F | 46.8F | | 52.1F | 51.2F | 51.0F | | | | | -320.3F |
| | | | | 73.6F | | | | 67.8F | | | | 69.3F | | | | 5100.8M* |

CRYOLAB ROTARY BAYONET TEST -COLD- AFTER 200 CYCLES

| 0305 | 01 | 02 | 03 | 04 | 05 | 06 | 07 | 08 | 09 | 10 | 11 | 12 | 13 | 14 | 15 | 16 |
|---|---|---|---|---|---|---|---|---|---|---|---|---|---|---|---|---|
| 100 | TOP BAYONET | | | | MIDDLE BAYONET | | | | BOTTOM BAYONET | | | | | | | |
| 200 | 0 DEG | 120 DEG | 240 DEG | | 0 DEG | 120 DEG | 240 DEG | | 0 DEG | 120 DEG | 240 DEG | | | | | INSIDE |
| 300 | | | | AMBIENT | | | | AMBIENT | | | | AMBIENT | | | | DEWAR |
| 400 | | | | | | | | | | | | | | | | |
| 15:01:24A | 63.3F | 62.7F | 62.8F | | 46.3F | 47.0F | 46.7F | | 52.1F | 51.3F | 51.0F | | | | | -320.3F |
| | | | | 73.8F | | | | 67.6F | | | | 67.8F | | | | 5100.8M* |
| 15:0[illegible]:04A | 63.3F | 62.8F | 62.3F | | 46.3F | 47.1F | 46.8F | | 52.2F | 51.4F | 51.1F | | | | | -320.1F |
| | | | | 73.8F | | | | 67.8F | | | | 67.5F | | | | 5100.7M* |
| 15:12:43A | 63.2F | 62.7F | 62.7F | | 46.5F | 47.2F | 46.8F | | 52.0F | 51.3F | 51.0F | | | | | -320.2F |
| | | | | 73.3F | | | | 68.8F | | | | 67.7F | | | | 5100.7M* |
| 15:18:23A | 63.3F | 62.8F | 62.9F | | 46.6F | 47.3F | 46.9F | | 52.3F | 51.6F | 51.3F | | | | | -320.1F |
| | | | | 73.7F | | | | 68.1F | | | | 67.8F | | | | 5100.8M* |
| 15:24:02A | 63.3F | 62.7F | 62.9F | | 46.6F | 47.3F | 46.9F | | 52.3F | 51.6F | 51.2F | | | | | -320.4F |
| | | | | 73.1F | | | | 68.0F | | | | 68.0F | | | | 5100.5M* |
| 15:2[illegible]:42A | 63.3F | 62.7F | 62.9F | | 46.7F | 47.4F | 46.9F | | 52.5F | 51.8F | 51.4F | | | | | -319.8F |
| | | | | 73.0F | | | | 68.2F | | | | 68.7F | | | | 5100.5M* |
| 15:3[illegible]:21A | 63.3F | 62.6F | 62.7F | | 46.6F | 47.2F | 46.8F | | 52.5F | 51.7F | 51.4F | | | | | -320.2F |
| | | | | 74.1F | | | | 67.8F | | | | 67.7F | | | | 5100.5M* |
| 15:4[illegible]:01A | 63.3F | 62.6F | 62.7F | | 46.7F | 47.3F | 47.1F | | 52.5F | 51.7F | 51.5F | | | | | -320.1F |
| | | | | 74.1F | | | | 67.8F | | | | 69.1F | | | | 5100.4M* |
| 15:4[illegible]:39A | 63.4F | 62.7F | 62.8F | | 46.7F | 47.4F | 47.1F | | 52.5F | 51.8F | 51.5F | | | | | -320.1F |
| | | | | 73.5F | | | | 67.8F | | | | 67.3F | | | | 5100.4M* |
| 15:5[illegible]:20A | 63.5F | 62.7F | 62.8F | | 46.8F | 47.4F | 47.1F | | 52.4F | 51.6F | 51.3F | | | | | -320.2F |
| | | | | 74.4F | | | | 68.0F | | | | 67.3F | | | | 5100.4M* |

17 CRYOLAB ROTARY BAYONET TEST -COLD- AFTER 200 CYCLES

| 0305 | 01 | 02 | 03 | 04 | 05 | 06 | 07 | 08 | 09 | 10 | 11 | 12 | 13 | 14 | 15 | 16 |
|---|---|---|---|---|---|---|---|---|---|---|---|---|---|---|---|---|
| 100 | TOP BAYONET | | | | MIDDLE BAYONET | | | | BOTTOM BAYONET | | | | | | | |
| 200 | 0 DEG | 120 DEG | 240 DEG | | 0 DEG | 120 DEG | 240 DEG | | 0 DEG | 120 DEG | 240 DEG | | | | | INSIDE |
| 300 | | | | AMBIENT | | | | AMBIENT | | | | AMBIENT | | | | DEWAR |
| 400 | | | | | | | | | | | | | | | | |
| 15:57:58A | 63.4F | 62.7F | 62.8F | | 46.8F | 47.4F | 47.2F | | 52.4F | 51.6F | 51.3F | | | | | -320.1F |
| | | | | 73.6F | | | | 67.6F | | | | 66.5F | | | | 5100.5M* |
| 16:03:37A | 63.3F | 62.7F | 62.7F | | 46.7F | 47.3F | 47.1F | | 52.2F | 51.4F | 51.2F | | | | | -320.1F |
| | | | | 73.8F | | | | 67.2F | | | | 66.7F | | | | 5100.5M* |
| 16:09:16A | 63.5F | 62.7F | 62.8F | | 46.8F | 47.6F | 47.1F | | 52.3F | 51.6F | 51.2F | | | | | -319.6F |
| | | | | 72.3F | | | | 66.6F | | | | 65.5F | | | | 5100.5M* |
| 16:12:00 | 63.3F | 62.6F | 63.0F | | 46.3F | 47.4F | 46.9F | | 52.2F | 51.5F | 51.1F | | | | | -319.9F |
| | | | | 73.2F | | | | 67.6F | | | | 67.0F | | | | 98.2M |
| 17:12:00 | 62.4F | 61.6F | 61.7F | | 45.0F | 45.7F | 45.4F | | 51.2F | 50.3F | 50.1F | | | | | -319.8F |
| | | | | 72.7F | | | | 65.2F | | | | 66.6F | | | | 81.7M |
| 18:12:00 | 60.6F | 59.9F | 60.0F | | 43.8F | 44.4F | 44.2F | | 50.5F | 49.7F | 49.4F | | | | | -319.7F |
| | | | | 69.9F | | | | 64.5F | | | | 65.2F | | | | 117.6M |
| 19:12:00 | 59.5F | 58.9F | 58.9F | | 42.8F | 43.8F | 43.0F | | 50.0F | 49.1F | 48.9F | | | | | -225.9F |
| | | | | 69.2F | | | | 64.6F | | | | 65.6F | | | | 115.5M |
| 20:12:00 | 58.6F | 57.9F | 57.8F | | 42.3F | 43.1F | 42.7F | | 49.5F | 48.7F | 48.4F | | | | | -319.8F |
| | | | | 68.6F | | | | 62.9F | | | | 64.9F | | | | 81.1M |
| 21:12:00 | 58.7F | 58.0F | 58.3F | | 42.9F | 43.8F | 42.9F | | 50.0F | 48.9F | 48.6F | | | | | -316.0F |
| | | | | 70.5F | | | | 64.7F | | | | 65.0F | | | | 115.8M |
| 22:12:00 | 59.2F | 58.5F | 58.4F | | 44.0F | 44.6F | 44.2F | | 51.0F | 49.8F | 49.6F | | | | | -320.1F |
| | | | | 69.1F | | | | 64.2F | | | | 66.0F | | | | 82.0M |

18

CRYOLAB ROTARY BAYONET TEST -COLD- AFTER 200 CYCLES

| 0305 100 200 300 400 | 01 | 02 | 03 | 04 | 05 | 06 | 07 | 08 | 09 | 10 | 11 | 12 | 13 | 14 | 15 | 16 |
|---|---|---|---|---|---|---|---|---|---|---|---|---|---|---|---|---|
| | TOP BAYONET | | | | MIDDLE BAYONET | | | | BOTTOM BAYONET | | | | | | | |
| | 0 DEG | 120 DEG | 240 DEG | | 0 DEG | 120 DEG | 240 DEG | | 0 DEG | 120 DEG | 240 DEG | | | | | INSIDE DEWAR |
| | | | | AMBIENT | | | | AMBIENT | | | | AMBIENT | | | | |
| 23:12:00 | 58.7F | 57.9F | 58.1F | | 43.4F | 44.5F | 43.7F | | 50.6F | 49.8F | 49.6F | | | | | -265.0F |
| | | | | 68.6F | | | | 63.3F | | | | 64.2F | | | | 113.7M |
| 00:12:00 | 57.7F | 56.9F | 57.3F | | 42.4F | 43.7F | 42.6F | | 50.0F | 48.9F | 48.7F | | | | | -320.2F |
| | | | | 69.1F | | | | 63.9F | | | | 65.0F | | | | 114.6M |
| 01:12:00 | 57.8F | 57.1F | 57.1F | | 42.5F | 43.4F | 42.8F | | 49.9F | 48.9F | 48.7F | | | | | -320.0F |
| | | | | 68.5F | | | | 63.1F | | | | 64.7F | | | | 80.8M |
| 02:12:00 | 56.6F | 56.0F | 56.4F | | 41.9F | 42.7F | 41.9F | | 49.4F | 48.3F | 48.1F | | | | | -319.5F |
| | | | | 66.5F | | | | 62.8F | | | | 62.4F | | | | 115.4M |
| 03:12:00 | 57.1F | 56.4F | 56.6F | | 41.7F | 43.1F | 41.9F | | 49.0F | 48.0F | 47.8F | | | | | -320.3F |
| | | | | 68.6F | | | | 63.7F | | | | 64.6F | | | | 97.2M |
| 04:12:00 | 57.3F | 56.7F | 56.8F | | 41.9F | 43.1F | 42.1F | | 49.1F | 48.0F | 47.9F | | | | | -320.2F |
| | | | | 67.8F | | | | 62.0F | | | | 64.2F | | | | 94.2M |
| 05:12:00 | 57.4F | 56.7F | 57.0F | | 41.9F | 43.1F | 42.0F | | 49.1F | 47.9F | 47.7F | | | | | -320.2F |
| | | | | 67.9F | | | | 62.7F | | | | 63.7F | | | | 100.0M |
| 06:12:00 | 56.9F | 56.4F | 56.6F | | 41.7F | 42.7F | 41.9F | | 48.9F | 47.8F | 47.6F | | | | | -320.0F |
| | | | | 66.8F | | | | 62.1F | | | | 63.4F | | | | 117.5M |
| 07:12:00 | 57.1F | 56.5F | 57.0F | | 41.6F | 42.5F | 41.6F | | 48.5F | 47.4F | 47.3F | | | | | -320.0F |
| | | | | 67.7F | | | | 62.5F | | | | 63.0F | | | | 82.5M |
| 08:12:00 | 57.3F | 57.1F | 57.5F | | 41.3F | 42.6F | 41.8F | | 48.7F | 47.6F | 47.4F | | | | | -320.1F |
| | | | | 68.3F | | | | 63.7F | | | | 64.3F | | | | 81.7M |

CRYOLAB ROTARY BAYONET TEST -COLD- AFTER 200 CYCLES

| 19 0306 100 200 300 400 | 01 | 02 | 03 | 04 | 05 | 06 | 07 | 08 | 09 | 10 | 11 | 12 | 13 | 14 | 15 | 16 INSIDE DEWAR |
|---|---|---|---|---|---|---|---|---|---|---|---|---|---|---|---|---|
| | TOP BAYONET | | | | MIDDLE BAYONET | | | | BOTTOM BAYONET | | | | | | | |
| | 0 DEG | 120 DEG | 240 DEG | | 0 DEG | 120 DEG | 240 DEG | | 0 DEG | 120 DEG | 240 DEG | | | | | |
| | | | | AMBIENT | | | | AMBIENT | | | | AMBIENT | | | | |
| 08:43:31 | 57.4F | 56.8F | 57.4F | | 41.3F | 41.9F | 41.4F | | 47.3F | 46.7F | 46.1F | | #854 | | | -320.1F |
| | | | | 68.1F | | | | 63.3F | | | | 62.0F | | | | 82.1M |
| 09:12:00 | 58.0F | 57.3F | 57.5F | | 41.6F | 42.8F | 41.7F | | 47.5F | 47.2F | 46.3F | | | | | -319.8F |
| | | | | 68.2F | | | | 63.3F | | | | 62.0F | #859 | | | 106.7M |
| 10:12:00 | 52.8F | 52.4F | 52.9F | | 36.9F | 37.9F | 36.9F | | 40.5F | 40.1F | 39.3F | | | | | -320.2F |
| | | | | 64.3F | | | | 60.8F | | | | 58.0F | | | | 117.5M |
| 11:12:00 | 55.7F | 55.3F | 55.8F | | 39.9F | 41.3F | 40.2F | | 43.2F | 44.6F | 43.9F | | | | | -320.1F |
| | | | | 66.7F | | | | 62.2F | | | | 60.9F | | | | 5104.7M* |
| 12:12:00 | 56.8F | 56.1F | 56.3F | | 42.3F | 43.5F | 42.4F | | 47.4F | 46.8F | 46.4F | | | | | -319.7F |
| | | | | 66.5F | | | | 63.2F | | | | 62.9F | | | | 91.3M |
| 13:12:00 | 56.3F | 55.7F | 55.9F | | 42.7F | 43.7F | 42.6F | | 47.9F | 47.0F | 46.5F | | | | | -319.8F |
| | | | | 66.5F | | | | 63.5F | | | | 61.7F | | | | 113.4M |
| 14:12:00 | 56.2F | 55.5F | 55.7F | | 41.8F | 43.4F | 42.2F | | 47.1F | 46.2F | 45.9F | | | | | -320.0F |
| | | | | 67.5F | | | | 60.0F | | | | 61.7F | | | | 103.2M |
| 15:12:00 | 54.5F | 53.8F | 54.0F | | 39.5F | 40.4F | 39.5F | | 44.8F | 44.3F | 43.5F | | | | | -320.4F |
| | | | | 67.2F | | | | 60.3F | | | | 60.7F | | | | 104.8M |
| 16:12:00 | 55.0F | 54.6F | 54.5F | | 41.2F | 42.0F | 41.1F | | 47.0F | 46.1F | 45.5F | | | | | -320.1F |
| | | | | 65.7F | | | | 61.0F | | | | 60.5F | | | | 108.2M |
| 17:12:00 | 55.9F | 55.3F | 55.2F | | 42.1F | 43.4F | 42.2F | | 48.1F | 47.1F | 46.6F | | | | | -320.4F |
| | | | | 67.0F | | | | 60.9F | | | | 63.9F | | | | 102.6M |

CRYOLAB ROTARY BAYONET TEST -COLD- AFTER 200 CYCLES

| 0306 | 01 | 02 | 03 | 04 | 05 | 06 | 07 | 08 | 09 | 10 | 11 | 12 | 13 | 14 | 15 | 16 |
|---|---|---|---|---|---|---|---|---|---|---|---|---|---|---|---|---|
| 100 | TOP BAYONET | | | | MIDDLE BAYONET | | | | BOTTOM BAYONET | | | | | | | |
| 200 | 0 DEG | 120 DEG | 340 DEG | | 0 DEG | 120 DEG | 240 DEG | | 0 DEG | 120 DEG | 240 DEG | | | | | INSIDE |
| 300 | | | | AMBIENT | | | | AMBIENT | | | | AMBIENT | | | | DEWAR |
| 400 | | | | | | | | | | | | | | | | |
| 18:12:00 | 56.9F | 56.1F | 56.4F | | 42.5F | 44.0F | 42.6F | | 48.4F | 47.7F | 47.1F | | | | | -320.4F |
| | | | | 68.5F | | | | 61.9F | | | | 62.2F | | | | 115.4M |
| 19:12:00 | 57.6F | 56.9F | 56.7F | | 43.2F | 44.8F | 43.5F | | 48.9F | 48.1F | 47.6F | | | | | -320.4F |
| | | | | 68.2F | | | | 60.7F | | | | 63.3F | | | | 112.2M |
| 20:12:00 | 57.3F | 56.5F | 56.8F | | 43.0F | 44.6F | 43.2F | | 48.6F | 48.2F | 47.5F | | | | | -320.3F |
| | | | | 67.7F | | | | 60.9F | | | | 61.9F | | | | 87.9M |
| 21:12:00 | 57.7F | 57.1F | 57.2F | | 43.1F | 44.8F | 43.3F | | 48.7F | 48.4F | 47.7F | | | | | -320.3F |
| | | | | 67.9F | | | | 60.7F | | | | 62.1F | | | | 88.1M |
| 22:12:00 | 56.9F | 56.4F | 56.6F | | 42.7F | 44.1F | 42.8F | | 48.4F | 47.8F | 47.1F | | | | | -320.3F |
| | | | | 67.5F | | | | 61.8F | | | | 61.5F | | | | 81.5M |
| 23:12:00 | 56.2F | 55.5F | 55.5F | | 42.1F | 43.6F | 42.1F | | 48.3F | 47.1F | 46.5F | | | | | -320.1F |
| | | | | 65.2F | | | | 59.4F | | | | 61.3F | | | | 95.4M |
| 00:12:00 | 55.0F | 54.3F | 54.1F | | 40.8F | 42.7F | 41.2F | | 46.8F | 46.4F | 45.6F | | | | | -319.8F |
| | | | | 64.4F | | | | 57.9F | | | | 59.7F | | | | 91.7M |
| 01:12:00 | 54.4F | 53.8F | 53.9F | | 40.5F | 42.1F | 40.7F | | 46.0F | 45.7F | 44.9F | | | | | -320.4F |
| | | | | 65.4F | | | | 58.9F | | | | 59.0F | | | | 88.2M |
| 02:12:00 | 54.7F | 54.3F | 54.1F | | 40.7F | 42.4F | 40.9F | | 45.7F | 45.2F | 44.4F | | | | | -320.2F |
| | | | | 65.3F | | | | 58.2F | | | | 58.5F | | | | 110.0M |
| 03:12:00 | 54.1F | 53.7F | 53.7F | | 40.5F | 42.2F | 40.8F | | 45.3F | 44.5F | 43.9F | | | | | -320.1F |
| | | | | 64.7F | | | | 57.4F | | | | 58.2F | | | | 117.6M |

CRYOLAB ROTARY BAYONET TEST -COLD- AFTER 200 CYCLES

| 21 0307 100 200 300 400 | 01 | 02 | 03 | 04 | 05 | 06 | 07 | 08 | 09 | 10 | 11 | 12 | 13 | 14 | 15 | 16 |
|---|---|---|---|---|---|---|---|---|---|---|---|---|---|---|---|---|
| | TOP BAYONET | | | | MIDDLE BAYONET | | | | BOTTOM BAYONET | | | | | | | INSIDE |
| | 0 DEG | 120 DEG | 240 DEG | | 0 DEG | 120 DEG | 240 DEG | | 0 DEG | 120 DEG | 240 DEG | | | | | DEWAR |
| | | | | AMBIENT | | | | AMBIENT | | | | AMBIENT | | | | |
| 04:12:00 | 54.1F | 53.6F | 53.7F | | 40.0F | 41.7F | 40.1F | | 45.2F | 44.4F | 43.7F | | | | | -320.0F |
| | | | | 64.6F | | | | 58.4F | | | | 58.7F | | | | 96.8M |
| 05:12:00 | 53.9F | 53.3F | 53.2F | | 39.6F | 41.2F | 39.9F | | 44.7F | 44.0F | 43.3F | | | | | -320.0F |
| | | | | 64.6F | | | | 57.4F | | | | 58.0F | | | | 106.1M |
| 06:12:00 | 53.2F | 52.6F | 53.0F | | 39.3F | 40.7F | 39.3F | | 44.5F | 43.5F | 42.9F | | | | | -319.7F |
| | | | | 64.1F | | | | 58.0F | | | | 58.1F | | | | 119.2M |
| 07:12:00 | 53.0F | 52.4F | 52.4F | | 39.0F | 40.7F | 39.2F | | 43.9F | 43.2F | 42.6F | | | | | -319.6F |
| | | | | 62.4F | | | | 56.4F | | | | 56.2F | | | | 109.2M |
| 07:16:58A | 52.9F | 52.4F | 52.4F | | 38.8F | 40.4F | 39.1F | | 43.7F | 43.1F | 42.4F | | | | | -319.8F |
| | | | | 63.8F | | | | 56.4F | | | | 56.5F | | | | 5103.8M+ |
| 08:12:00 | 52.2F | 51.6F | 51.7F | | 37.7F | 39.2F | 37.9F | | 42.1F | 41.1F | 40.5F | | | | | -319.8F |
| | | | | 62.6F | | | | 54.4F | | | | 56.1F | | | | 103.2M |
| 09:12:00 | 51.9F | 51.4F | 51.5F | | 37.5F | 39.1F | 37.7F | | 43.0F | 42.0F | 41.4F | | | | | -319.8F |
| | | | | 63.7F | | | | 56.0F | | | | 56.9F | | | | 95.9M |
| 10:12:00 | 52.3F | 51.9F | 52.2F | | 38.4F | 39.9F | 38.9F | | 43.9F | 43.2F | 42.6F | | | | | -319.7F |
| | | | | 64.3F | | | | 56.8F | | | | 57.4F | | | | 84.6M |
| 11:12:00 | 53.3F | 52.7F | 53.0F | | 38.4F | 39.5F | 38.4F | | 43.5F | 43.1F | 42.2F | | | | | -319.5F |
| | | | | 63.9F | | | | 57.9F | | | | 56.9F | | | | 118.4M |
| 12:12:00 | 54.3F | 53.7F | 54.2F | | 38.2F | 39.0F | 38.2F | | 44.0F | 43.8F | 42.7F | | | | | -319.3F |
| | | | | 63.2F | | | | 58.3F | | | | 57.4F | | | | 119.2M |

\# 1074

CRYOLAB ROTARY BAYONET TEST -COLD- AFTER 200 CYCLES

| 0307 100 200 300 400 | 01 | 02 | 03 | 04 | 05 | 06 | 07 | 08 | 09 | 10 | 11 | 12 | 13 | 14 | 15 | 16 |
|---|---|---|---|---|---|---|---|---|---|---|---|---|---|---|---|---|
| | TOP BAYONET | | | | MIDDLE BAYONET | | | | BOTTOM BAYONET | | | | | | | |
| | 0 DEG | 120 DEG | 240 DEG | | 0 DEG | 120 DEG | 240 DEG | | 0 DEG | 120 DEG | 240 DEG | | | | | INSIDE DEWAR |
| | | | | AMBIENT | | | | AMBIENT | | | | AMBIENT | | | | |
| 13:12:00 | 55.6F | 55.1F | 55.5F | | 38.3F | 39.0F | 38.5F | | 45.4F | 45.2F | 44.1F | | | | | -319.7F |
| | | | | 66.7F | | | | 59.3F | | | | 60.5F | | | | 118.7M |
| 14:12:00 | 55.0F | 54.6F | 55.1F | | 38.0F | 38.9F | 37.9F | | 43.9F | 43.7F | 42.6F | | | | | -319.9F |
| | | | | 65.7F | | | | 59.2F | | | | 59.4F | | | | 117.8M |
| 15:12:00 | 56.0F | 55.8F | 56.1F | | 39.3F | 39.9F | 39.3F | | 45.8F | 45.0F | 44.4F | | | | | -319.8F |
| | | | | 67.1F | | | | 60.0F | | | | 59.4F | | | | 96.6M |
| 16:12:00 | 57.1F | 56.7F | 57.2F | | 39.9F | 40.4F | 39.9F | | 45.7F | 45.3F | 44.5F | | | | | -319.6F |
| | | | | 67.5F | | | | 60.9F | | | | 60.7F | | | | 80.8M |
| 17:12:00 | 58.1F | 57.9F | 58.4F | | 39.9F | 40.5F | 40.4F | | 45.6F | 44.6F | 44.3F | | | | | -319.5F |
| | | | | 68.4F | | | | 60.3F | | | | 58.6F | | | | 101.4M |
| 18:12:00 | 58.4F | 58.3F | 58.6F | | 40.0F | 40.6F | 40.6F | | 44.5F | 43.4F | 43.1F | | | | | -319.3F |
| | | | | 68.6F | | | | 60.8F | | | | 60.8F | | | | 119.1M |
| 19:12:00 | 58.2F | 58.0F | 58.3F | | 39.9F | 40.6F | 40.5F | | 43.8F | 42.6F | 42.4F | | | | | -319.6F |
| | | | | 68.6F | | | | 61.1F | | | | 57.0F | | | | 106.0M |
| 20:12:00 | 58.3F | 58.3F | 58.4F | | 39.0F | 39.8F | 39.6F | | 42.8F | 41.8F | 41.5F | | | | | -319.7F |
| | | | | 68.0F | | | | 60.6F | | | | 55.8F | | | | 5102.3M |
| 21:12:00 | 58.4F | 58.3F | 58.5F | | 39.9F | 40.6F | 40.4F | | 43.0F | 41.9F | 41.6F | | | | | -319.7F |
| | | | | 68.4F | | | | 61.1F | | | | 56.7F | | | | 100.7M |
| 22:12:00 | 58.5F | 58.3F | 58.4F | | 39.3F | 40.4F | 39.7F | | 43.1F | 42.0F | 41.7F | | | | | -319.7F |
| | | | | 69.0F | | | | 4F | | | | 56.2F | | | | 92.0M |

CRYOLAB ROTARY BAYONET TEST -COLD- AFTER 200 CYCLES

| 0307 | 01 | 02 | 03 | 04 | 05 | 06 | 07 | 08 | 09 | 10 | 11 | 12 | 13 | 14 | 15 | 16 |
|---|---|---|---|---|---|---|---|---|---|---|---|---|---|---|---|---|
| 100 | TOP BAYONET | | | | MIDDLE BAYONET | | | | BOTTOM BAYONET | | | | | | | |
| 200 | 0 DEG | 120 DEG | 240 DEG | | 0 DEG | 120 DEG | 240 DEG | | 0 DEG | 120 DEG | 240 DEG | | | | | INSIDE |
| 300 | | | | AMBIENT | | | | AMBIENT | | | | AMBIENT | | | | DEWAR |
| 400 | | | | | | | | | | | | | | | | |
| 23:12:00 | 58.3F | 58.5F | 58.4F | | 40.2F | 41.2F | 40.9F | | 43.7F | 42.7F | 42.4F | | | | | -319.7F |
| | | | | 67.4F | | | | 60.5F | | | | 57.2F | | | | 104.2M |
| 00:12:00 | 58.5F | 58.5F | 58.6F | | 40.7F | 41.3F | 41.3F | | 44.3F | 43.5F | 43.0F | | | | | -319.7F |
| | | | | 68.1F | | | | 61.4F | | | | 57.9F | | | | 82.6M |
| 01:12:00 | 58.5F | 58.7F | 58.7F | | 41.0F | 41.8F | 41.5F | | 44.5F | 43.5F | 43.1F | | | | | -319.8F |
| | | | | 68.3F | | | | 61.5F | | | | 57.3F | | | | 113.3M |
| 02:12:00 | 58.5F | 58.6F | 58.6F | | 41.2F | 42.2F | 41.7F | | 44.5F | 43.8F | 43.2F | | | | | -319.7F |
| | | | | 67.8F | | | | 61.1F | | | | 57.9F | | | | 94.8M |
| 03:12:00 | 58.6F | 58.7F | 58.6F | | 41.0F | 41.9F | 41.4F | | 44.7F | 43.8F | 43.4F | | | | | -319.7F |
| | | | | 67.6F | | | | 61.5F | | | | 57.3F | | | | 81.1M |
| 04:12:00 | 59.0F | 58.8F | 58.7F | | 41.0F | 42.2F | 41.7F | | 44.7F | 43.8F | 43.4F | | | | | -319.7F |
| | | | | 70.1F | | | | 60.4F | | | | 58.0F | | | | 116.4M |
| 05:12:00 | 58.3F | 58.2F | 58.1F | | 41.1F | 41.8F | 41.6F | | 44.1F | 43.3F | 42.9F | | | | | -168.2F |
| | | | | 68.5F | | | | 62.3F | | | | 58.3F | | | | 82.2M |
| 06:12:00 | 58.7F | 58.3F | 58.4F | | 41.1F | 42.3F | 41.6F | | 44.3F | 43.5F | 43.0F | | | | | -319.6F |
| | | | | 69.3F | | | | 60.0F | | | | 58.1F | | | | 108.8M |
| 07:12:00 | 58.3F | 58.0F | 57.9F | | 41.2F | 42.2F | 41.8F | | 44.8F | 43.8F | 43.5F | | | | | -319.3F |
| | | | | 67.1F | | | | 63.1F | | | | 59.0F | | | | 114.0M |
| 08:12:00 | 57.8F | 57.6F | 57.7F | | 41.0F | 42.4F | 41.5F | | 44.8F | 43.7F | 43.3F | | | | | -319.9F |
| | | | | 69.1F | | | | 60.4F | | | | 57.9F | | | | 81.3M |

CRYOLAB ROTARY BAYONET TEST -COLD- AFTER 200 CYCLES

| 0308 | 01 | 02 | 03 | 04 | 05 | 06 | 07 | 08 | 09 | 10 | 11 | 12 | 13 | 14 | 15 | 16 |
|---|---|---|---|---|---|---|---|---|---|---|---|---|---|---|---|---|
| 100 | TOP BAYONET | | | | MIDDLE BAYONET | | | | BOTTOM BAYONET | | | | | | | |
| 200 | 0 DEG | 120 DEG | 240 DEG | | 0 DEG | 120 DEG | 240 DEG | | 0 DEG | 120 DEG | 240 DEG | | | | | INSIDE |
| 300 | | | | AMBIENT | | | | AMBIENT | | | | AMBIENT | | | | DEWAR |
| 400 | | | | | | | | | | | | | | | | |
| 09:12:00 | 57.8F | 57.5F | 57.5F | | 41.0F | 42.3F | 41.9F | | 44.9F | 44.0F | 43.5F | | | | | -319.5F |
| | | | | 65.9F | | | | 61.6F | | | | 58.9F | | | | 89.9M |
| 10:12:00 | 58.0F | 57.9F | 58.0F | | 41.1F | 42.1F | 41.6F | | 45.0F | 44.0F | 43.7F | | | | | -319.9F |
| | | | | 68.9F | | | | 61.7F | | | | 58.7F | | | | 115.1M |
| 11:12:00 | 58.8F | 58.6F | 58.7F | | 42.0F | 43.0F | 42.8F | | 45.5F | 44.6F | 44.2F | | | | | -319.5F |
| | | | | 68.7F | | | | 63.8F | | | | 60.3F | | | | 85.6M |
| 12:12:00 | 59.7F | 59.6F | 59.5F | | 43.1F | 44.0F | 43.8F | | 46.1F | 45.1F | 44.8F | | | | | -320.0F |
| | | | | 70.4F | | | | 63.8F | | | | 61.5F | | | | 92.7M |
| 13:12:00 | 60.3F | 60.0F | 60.2F | | 43.8F | 45.2F | 44.6F | | 46.5F | 45.7F | 45.3F | | | | | -319.6F |
| | | | | 69.9F | | | | 65.4F | | | | 61.0F | | | | 95.2M |
| 14:12:00 | 60.3F | 60.3F | 60.3F | | 43.9F | 44.9F | 44.8F | | 46.4F | 45.6F | 45.3F | | | | | -320.0F |
| | | | | 70.8F | | | | 64.0F | | | | 61.8F | | | | 100.1M |
| 15:12:00 | 60.1F | 60.1F | 60.1F | | 43.4F | 44.2F | 43.8F | | 46.5F | 45.6F | 45.3F | | | | | -319.9F |
| | | | | 70.5F | | | | 63.7F | | | | 61.7F | | | | 92.7M |
| 16:12:00 | 60.4F | 60.2F | 60.3F | | 43.8F | 45.0F | 44.6F | | 46.8F | 46.0F | 45.6F | | | | | -242.0F |
| | | | | 69.9F | | | | 64.5F | | | | 62.2F | | | | 95.4M |
| 17:12:00 | 60.5F | 60.5F | 60.3F | | 44.6F | 45.6F | 45.6F | | 47.0F | 46.2F | 45.9F | | | | | -320.2F |
| | | | | 71.0F | | | | 65.0F | | | | 62.7F | | | | 80.0M |
| 18:12:00 | 60.8F | 60.4F | 60.6F | | 45.5F | 46.7F | 46.7F | | 46.9F | 46.3F | 45.7F | | | | | -320.0F |
| | | | | 71.4F | | | | 1F | | | | 61.9F | | | | 85.1M |

CRYOLAB ROTARY BAYONET TEST -COLD- AFTER 200 CYCLES

| 0308 | 01 | 02 | 03 | 04 | 05 | 06 | 07 | 08 | 09 | 10 | 11 | 12 | 13 | 14 | 15 | 16 |
|---|---|---|---|---|---|---|---|---|---|---|---|---|---|---|---|---|
| 100 | TOP BAYONET | | | | MIDDLE BAYONET | | | | BOTTOM BAYONET | | | | | | | |
| 200 | 0 DEG | 120 DEG | 240 DEG | | 0 DEG | 120 DEG | 240 DEG | | 0 DEG | 120 DEG | 240 DEG | | | | | INSIDE |
| 300 | | | | AMBIENT | | | | AMBIENT | | | | AMBIENT | | | | DEWAR |
| 400 | | | | | | | | | | | | | | | | |
| 19:12:00 | 59.1F | 58.9F | 59.1F | | 43.7F | 44.4F | 44.0F | | 46.7F | 45.9F | 45.5F | | | | | -319.9F |
| | | | | 68.8F | | | | 63.3F | | | | 60.3F | | | | 108.3M |
| 20:12:00 | 59.1F | 59.0F | 59.0F | | 42.4F | 43.2F | 42.7F | | 46.8F | 46.2F | 45.7F | | | | | -319.5F |
| | | | | 68.9F | | | | 62.1F | | | | 61.6F | | | | 82.5M |
| 21:12:00 | 59.4F | 59.4F | 59.5F | | 41.9F | 42.7F | 42.1F | | 46.6F | 45.7F | 45.4F | | | | | -320.0F |
| | | | | 70.2F | | | | 62.7F | | | | 61.3F | | | | 80.7M |
| 22:12:00 | 59.9F | 59.9F | 59.9F | | 42.1F | 42.8F | 42.4F | | 46.9F | 46.0F | 45.7F | | | | | -319.6F |
| | | | | 69.8F | | | | 62.9F | | | | 62.6F | | | | 119.4M |
| 23:12:00 | 59.8F | 59.3F | 59.7F | | 42.1F | 42.8F | 42.3F | | 46.7F | 45.8F | 45.5F | | | | | -319.9F |
| | | | | 70.9F | | | | 62.6F | | | | 61.5F | | | | 94.3M |
| 00:12:00 | 60.1F | 59.7F | 59.8F | | 42.3F | 43.1F | 42.6F | | 46.9F | 46.0F | 45.6F | | | | | -319.7F |
| | | | | 70.2F | | | | 62.6F | | | | 61.5F | | | | 84.7M |
| 01:12:00 | 60.1F | 59.6F | 59.9F | | 42.6F | 43.1F | 42.6F | | 46.8F | 45.9F | 45.6F | | | | | -320.0F |
| | | | | 70.4F | | | | 64.6F | | | | 62.5F | | | | 119.9M |
| 02:12:00 | 60.4F | 59.9F | 60.3F | | 42.6F | 43.4F | 42.8F | | 46.9F | 46.0F | 45.7F | | | | | -319.8F |
| | | | | 70.9F | | | | 63.1F | | | | 62.2F | | | | 101.2M |
| 03:12:00 | 60.4F | 60.0F | 60.3F | | 42.3F | 43.5F | 43.0F | | 46.9F | 46.0F | 45.7F | | | | | -319.8F |
| | | | | 69.9F | | | | 63.2F | | | | 62.7F | | | | 119.2M |
| 04:12:00 | 60.3F | 59.8F | 60.3F | | 42.8F | 43.9F | 42.9F | | 46.9F | 46.2F | 45.7F | | | | | -319.5F |
| | | | | 70.2F | | | | 62.4F | | | | 61.6F | | | | 113.6M |

CRYOLAB ROTARY BAYONET TEST -COLD- AFTER 200 CYCLES

| 0309 | 01 | 02 | 03 | 04 | 05 | 06 | 07 | 08 | 09 | 10 | 11 | 12 | 13 | 14 | 15 | 16 |
|---|---|---|---|---|---|---|---|---|---|---|---|---|---|---|---|---|
| 100 | TOP BAYONET | | | | MIDDLE BAYONET | | | | BOTTOM BAYONET | | | | | | | |
| 200 | 0 DEG | 120 DEG | 240 DEG | | 0 DEG | 120 DEG | 240 DEG | | 0 DEG | 120 DEG | 240 DEG | | | | | INSIDE |
| 300 | | | | AMBIENT | | | | AMBIENT | | | | AMBIENT | | | | DEWAR |
| 400 | | | | | | | | | | | | | | | | |
| 05:12:00 | 60.5F | 60.0F | 60.2F | | 42.9F | 43.7F | 43.2F | | 47.0F | 46.1F | 45.8F | | | | | -319.9F |
| | | | | 71.1F | | | | 63.6F | | | | 62.4F | | | | 82.4M |
| 06:12:00 | 60.9F | 60.3F | 60.4F | | 43.5F | 44.0F | 43.4F | | 47.0F | 46.2F | 46.0F | | | | | -319.6F |
| | | | | 70.4F | | | | 65.2F | | | | 63.1F | | | | 99.6M |
| 07:12:00 | 61.3F | 60.8F | 60.8F | | 43.5F | 44.2F | 43.7F | | 47.1F | 46.3F | 46.1F | | | | | -319.9F |
| | | | | 72.3F | | | | 63.9F | | | | 62.6F | | | | 118.8M |
| 08:12:00 | 62.0F | 61.6F | 61.5F | | 43.9F | 45.0F | 44.3F | | 47.6F | 47.0F | 46.6F | | | | | -319.[illegible] |
| | | | | 72.1F | | | | 64.7F | | | | 63.0F | | | | 94.1[illegible] |
| 09:12:00 | 62.1F | 61.8F | 62.1F | | 44.2F | 45.0F | 44.3F | | 47.9F | 47.1F | 46.9F | | | | | -320.0F |
| | | | | 73.8F | | | | 65.1F | | | | 63.3F | | | | 83.1M |
| 10:12:00 | 63.0F | 62.5F | 62.7F | | 44.6F | 45.5F | 45.0F | | 48.3F | 47.6F | 47.3F | | | | | -319.9F |
| | | | | 74.0F | | | | 64.6F | | | | 64.0F | | | | 119.6M |
| 11:12:00 | 63.4F | 63.1F | 63.3F | | 45.2F | 45.9F | 45.5F | | 48.8F | 48.0F | 47.8F | | | | | -320.0F |
| | | | | 73.3F | | | | 67.1F | | | | 64.9F | | | | 111.9M |
| 12:12:00 | 62.5F | 62.2F | 62.1F | | 45.7F | 46.6F | 45.9F | | 49.8F | 48.8F | 48.5F | | | | | -319.9F |
| | | | | 72.1F | | | | 66.6F | | | | 65.1F | | | | 82.3M |
| 13:12:00 | 61.6F | 61.5F | 61.4F | | 46.1F | 46.8F | 46.2F | | 50.0F | 49.1F | 48.8F | | | | | -320.0F |
| | | | | 71.9F | | | | 66.2F | | | | 65.4F | | | | 82.2M |
| 14:12:00 | 61.7F | 61.5F | 61.3F | | 46.5F | 47.2F | 46.5F | | 50.4F | 49.5F | 49.2F | | | | | -320.1F |
| | ( | | | 72.4F | | | | ( 3F | | | | 65.5F | | | ( ) | 80.8M |

CRYOLAB ROTARY BAYONET TEST -COLD- AFTER 200 CYCLES

| 0309 | 01 | 02 | 03 | 04 | 05 | 06 | 07 | 08 | 09 | 10 | 11 | 12 | 13 | 14 | 15 | 16 |
|---|---|---|---|---|---|---|---|---|---|---|---|---|---|---|---|---|
| 100 | TOP BAYONET | | | | MIDDLE BAYONET | | | | BOTTOM BAYONET | | | | | | | |
| 200 | 0 DEG | 120 DEG | 240 DEG | | 0 DEG | 120 DEG | 240 DEG | | 0 DEG | 120 DEG | 240 DEG | | | | | INSIDE |
| 300 | | | | AMBIENT | | | | AMBIENT | | | | AMBIENT | | | | DEWAR |
| 400 | | | | | | | | | | | | | | | | |
| 15:12:00 | 61.5F | 61.1F | 61.1F | | 47.0F | 47.7F | 47.1F | | 50.8F | 49.9F | 49.6F | | | | | -320.0F |
| | | | | 72.0F | | | | 66.5F | | | | 66.6F | | | | 105.8M |
| 16:12:00 | 62.0F | 61.8F | 61.6F | | 47.6F | 48.1F | 47.5F | | 51.0F | 50.1F | 49.8F | | | | | -316.5F |
| | | | | 72.9F | | | | 68.0F | | | | 66.8F | | | | 91.3M |
| 17:12:00 | 61.8F | 61.0F | 61.0F | | 47.7F | 48.4F | 47.7F | | 51.2F | 50.2F | 49.9F | | | | | -320.0F |
| | | | | 72.9F | | | | 68.2F | | | | 67.3F | | | | 94.6M |
| 18:12:00 | 62.0F | 61.3F | 61.3F | | 47.5F | 48.4F | 47.8F | | 51.2F | 50.4F | 50.0F | | | | | -319.7F |
| | | | | 72.3F | | | | 66.1F | | | | 66.6F | | | | 109.2M |
| 19:12:00 | 61.7F | 61.0F | 61.0F | | 47.3F | 48.0F | 47.2F | | 51.0F | 50.0F | 49.7F | | | | | -319.8F |
| | | | | 72.6F | | | | 67.5F | | | | 66.6F | | | | 114.0M |
| 20:12:00 | 61.5F | 61.1F | 60.9F | | 47.0F | 47.7F | 47.1F | | 50.9F | 50.0F | 49.7F | | | | | -319.9F |
| | | | | 72.1F | | | | 66.5F | | | | 66.2F | | | | 109.3M |
| 21:12:00 | 61.2F | 60.7F | 60.5F | | 47.0F | 47.6F | 46.9F | | 50.9F | 49.9F | 49.6F | | | | | -319.8F |
| | | | | 72.0F | | | | 67.0F | | | | 66.4F | | | | 116.7M |
| 22:12:00 | 61.0F | 60.5F | 60.3F | | 46.7F | 47.5F | 46.8F | | 50.9F | 49.9F | 49.6F | | | | | -319.8F |
| | | | | 71.7F | | | | 66.2F | | | | 65.8F | | | | 99.6M |
| 23:12:00 | 60.6F | 60.3F | 60.0F | | 46.7F | 47.4F | 46.8F | | 50.8F | 49.8F | 49.5F | | | | | -319.8F |
| | | | | 70.9F | | | | 65.9F | | | | 65.9F | | | | 114.9M |
| 00:12:00 | 60.6F | 60.3F | 60.1F | | 46.7F | 47.4F | 46.6F | | 50.8F | 49.7F | 49.5F | | | | | -319.8F |
| | | | | 71.4F | | | | 65.9F | | | | 65.8F | | | | 119.0M |

CRYOLAB ROTARY BAYONET TEST -COLD- AFTER 200 CYCLES

| 0310 100 200 300 400 | 01 | 02 | 03 | 04 | 05 | 06 | 07 | 08 | 09 | 10 | 11 | 12 | 13 | 14 | 15 | 16 |
|---|---|---|---|---|---|---|---|---|---|---|---|---|---|---|---|---|
| | TOP BAYONET | | | | MIDDLE BAYONET | | | | BOTTOM BAYONET | | | | | | | |
| | 0 DEG | 120 DEG | 240 DEG | | 0 DEG | 120 DEG | 240 DEG | | 0 DEG | 120 DEG | 240 DEG | | | | | INSIDE DEWAR |
| | | | | AMBIENT | | | | AMBIENT | | | | AMBIENT | | | | |
| 01:12:00 | 60.8F | 60.4F | 60.3F | | 46.7F | 47.5F | 46.8F | | 50.8F | 50.0F | 49.6F | | | | | -319.7F |
| | | | | 71.4F | | | | 64.2F | | | | 66.8F | | | | 87.9M |
| 02:12:00 | 60.7F | 60.4F | 60.3F | | 46.7F | 47.4F | 46.6F | | 50.8F | 49.7F | 49.4F | | | | | -319.8F |
| | | | | 70.8F | | | | 64.4F | | | | 66.2F | | | | 95.8M |
| 03:12:00 | 60.7F | 60.5F | 60.3F | | 46.5F | 47.3F | 46.6F | | 50.7F | 49.7F | 49.4F | | | | | -319.7F |
| | | | | 70.9F | | | | 64.6F | | | | 66.5F | | | | 80.9M |
| 04:12:00 | 60.8F | 60.1F | 60.1F | | 46.4F | 47.2F | 46.3F | | 50.6F | 49.5F | 49.3F | | | | | -319.8F |
| | | | | 71.6F | | | | 65.7F | | | | 66.2F | | | | 79.9M |
| 05:12:00 | 60.9F | 60.5F | 60.2F | | 46.2F | 47.0F | 46.3F | | 50.6F | 49.6F | 49.3F | | | | | -319.8F |
| | | | | 71.1F | | | | 64.6F | | | | ~~66.1F~~ | | | | 92.6M |
| 06:09:43 | 60.8F | 60.4F | 60.3F | | 46.2F | 47.0F | 46.3F | | 50.7F | 49.7F | 49.5F | # 1845 | | | | -319.8F |
| | | | | ~~70.9F~~ | | | | 64.8F | | | | 67.3F | | | | 5095.8M* |
| 07:10:00 | 59.1F | 58.7F | 58.5F | | 46.2F | 46.7F | 46.9F | | 49.5F | 49.0F | 49.1F | | | | | -317.9F |
| | | | | 66.6F | | | | 62.0F | | | | 60.0F | | | | 113.6M |
| 08:10:00 | 62.0F | 61.5F | 61.9F | | 46.2F | 47.1F | 46.4F | | 49.7F | 48.8F | 48.7F | | | | | -320.4F |
| | | | | 73.4F | | | | 65.6F | | | | 65.1F | | | | 118.9M |
| 09:10:00 | 61.5F | 61.3F | 61.1F | | 46.9F | 47.5F | 47.0F | | 51.0F | 50.2F | 49.7F | | | | | -320.1F |
| | | | | 71.0F | | | | 64.5F | | | | 65.0F | | | | 94.1M |
| 10:10:00 | 61.1F | 60.6F | 61.1F | | 46.5F | 47.1F | 46.6F | | 50.4F | 49.7F | 49.4F | | | | | -320.1F |
| | | | | 70.2F | | | | [illegible] 5F | | | | 66.5F | | | | 101.1M |

CRYOLAB ROTARY BAYONET TEST -COLD- AFTER 200 CYCLES

| 0310 | 01 | 02 | 03 | 04 | 05 | 06 | 07 | 08 | 09 | 10 | 11 | 12 | 13 | 14 | 15 | 16 |
|---|---|---|---|---|---|---|---|---|---|---|---|---|---|---|---|---|
| 100 | TOP BAYONET | | | | MIDDLE BAYONET | | | | BOTTOM BAYONET | | | | | | | |
| 200 | 0 DEG | 120 DEG | 240 DEG | | 0 DEG | 120 DEG | 240 DEG | | 0 DEG | 120 DEG | 240 DEG | | | | | INSIDE |
| 300 | | | | AMBIENT | | | | AMBIENT | | | | AMBIENT | | | | |
| 400 | | | | | | | | | | | | | | | | DEWAR |
| 11:10:00 | 61.3F | 61.3F | 61.2F | | 47.4F | 47.9F | 47.3F | | 51.3F | 50.6F | 50.2F | | | | | -320.2F |
| | | | | 71.8F | | | | 64.2F | | | | 65.6F | | | | 94.6M |
| 12:10:00 | 61.5F | 60.8F | 60.7F | | 47.6F | 48.1F | 47.6F | | 51.8F | 51.2F | 50.8F | | | | | -320.0F |
| | | | | 71.2F | | | | 64.1F | | | | 64.8F | | | | 79.9M |
| 13:10:00 | 60.4F | 59.7F | 59.6F | | 47.5F | 47.6F | 47.1F | | 51.9F | 50.9F | 50.6F | | | | | -320.1F |
| | | | | 69.8F | | | | 63.6F | | | | 67.9F | | | | 112.5M |
| 14:00:05 | 59.2F | 58.6F | 58.6F | | 49.9F | 50.2F | 51.9F | | 53.5F | 52.5F | 53.3F | | | | | -320.5F |
| | | | | 69.3F | | | | 67.3F | | | | 69.4F | | | | 79.8M |
| 14:10:00 | 59.1F | 58.6F | 58.3F | | 49.9F | 50.2F | 51.7F | | 53.3F | 52.6F | 52.7F | | | | | -320.5F |
| | | | | 68.0F | | | | 68.2F | | | | 69.0F | | | | 119.4M |
| 15:10:00 | 58.0F | 57.3F | 57.4F | | 47.4F | 48.1F | 48.1F | | 51.4F | 50.9F | 50.4F | | | | | -320.5F |
| | | | | 68.0F | | | | 62.9F | | | | 64.8F | | | | 116.6M |
| 16:10:00 | 58.9F | 58.3F | 58.4F | | 44.3F | 45.2F | 44.4F | | 50.5F | 50.1F | 49.5F | | | | | -320.0F |
| | | | | 68.7F | | | | 63.1F | | | | 64.5F | | | | 86.2M |
| 17:10:00 | 59.4F | 58.8F | 58.9F | | 43.8F | 45.0F | 44.1F | | 50.8F | 50.5F | 49.9F | | | | | -320.6F |
| | | | | 69.3F | | | | 60.6F | | | | 64.2F | | | | 119.7M |
| 18:10:00 | 59.2F | 58.5F | 58.5F | | 43.7F | 44.9F | 43.8F | | 50.5F | 50.1F | 49.3F | | | | | -320.1F |
| | | | | 68.6F | | | | 62.6F | | | | 63.6F | | | | 104.3M |
| 19:10:00 | 59.5F | 58.8F | 58.9F | | 43.2F | 44.5F | 43.5F | | 49.9F | 49.5F | 48.9F | | | | | -320.5F |
| | | | | 70.0F | | | | 60.9F | | | | 63.2F | | | | 80.3M |

CRYOLAB ROTARY BAYONET TEST -COLD- AFTER 200 CYCLES

| 0310 | 01 | 02 | 03 | 04 | 05 | 06 | 07 | 08 | 09 | 10 | 11 | 12 | 13 | 14 | 15 | 16 |
|---|---|---|---|---|---|---|---|---|---|---|---|---|---|---|---|---|
| 100 | TOP BAYONET | | | | MIDDLE BAYONET | | | | BOTTOM BAYONET | | | | | | | |
| 200 | 0 DEG | 120 DEG | 240 DEG | | 0 DEG | 120 DEG | 240 DEG | | 0 DEG | 120 DEG | 240 DEG | | | | | INSIDE |
| 300 | | | | AMBIENT | | | | AMBIENT | | | | AMBIENT | | | | DEWAR |
| 400 | | | | | | | | | | | | | | | | |
| 20:10:00 | 60.0F | 59.4F | 59.5F | | 43.0F | 44.5F | 43.3F | | 49.7F | 49.0F | 48.4F | | | | | -320.1F |
| | | | | 69.4F | | | | 63.5F | | | | 62.6F | | | | 118.2M |
| 21:10:00 | 59.9F | 59.2F | 59.2F | | 43.1F | 44.4F | 43.4F | | 49.6F | 49.3F | 48.5F | | | | | -320.4F |
| | | | | 69.8F | | | | 61.2F | | | | 63.5F | | | | 109.6M |
| 22:10:00 | 60.1F | 59.4F | 59.3F | | 43.2F | 44.5F | 43.5F | | 50.0F | 49.7F | 49.0F | | | | | -320.2F |
| | | | | 69.4F | | | | 61.4F | | | | 63.7F | | | | 100.7M |
| 23:10:00 | 60.0F | 59.4F | 59.6F | | 43.1F | 44.2F | 43.3F | | 49.9F | 49.1F | 48.6F | | | | | -320.4F |
| | | | | 70.0F | | | | 62.2F | | | | 63.1F | | | | 97.4M |
| 00:10:00 | 60.4F | 59.9F | 59.8F | | 43.3F | 44.6F | 43.6F | | 49.9F | 49.5F | 48.8F | | | | | -320.1F |
| | | | | 69.7F | | | | 62.3F | | | | 63.9F | | | | 90.7M |
| 01:10:00 | 60.2F | 59.8F | 60.0F | | 42.9F | 43.7F | 43.2F | | 50.1F | 49.1F | 48.7F | | | | | -316.4F |
| | | | | 70.3F | | | | 62.8F | | | | 63.3F | | | | 83.3M |
| 02:10:00 | 60.6F | 60.2F | 60.6F | | 42.5F | 43.3F | 42.8F | | 50.1F | 49.1F | 48.8F | | | | | -319.8F |
| | | | | 70.3F | | | | 63.3F | | | | 63.3F | | | | 86.8M* |
| 03:10:00 | 60.5F | 60.2F | 60.6F | | 42.0F | 42.7F | 42.3F | | 50.0F | 48.9F | 48.6F | | | | | -319.6F |
| | | | | 69.3F | | | | 62.5F | | | | 64.4F | | | | 119.5M |
| 04:10:00 | 60.0F | 59.3F | 59.8F | | 41.4F | 42.1F | 41.7F | | 49.7F | 49.1F | 48.5F | | | | | -319.7F |
| | | | | 69.5F | | | | 62.6F | | | | 62.5F | | | | 5095.8M* |
| 05:10:00 | 60.3F | 59.5F | 59.7F | | 41.8F | 42.6F | 42.2F | | 49.1F | 48.2F | 47.8F | | | | | -250.9F |
| | | | | 69.3F | | | | [illegible] 9F | | | | 62.8F | | | | 98.5M |

CRYOLAB ROTARY BAYONET TEST -COLD- AFTER 200 CYCLES

| 0311 100 200 300 400 | 01 | 02 | 03 | 04 | 05 | 06 | 07 | 08 | 09 | 10 | 11 | 12 | 13 | 14 | 15 | 16 |
|---|---|---|---|---|---|---|---|---|---|---|---|---|---|---|---|---|
| | TOP BAYONET | | | | MIDDLE BAYONET | | | | BOTTOM BAYONET | | | | | | | |
| | 0 DEG | 120 DEG | 240 DEG | AMBIENT | 0 DEG | 120 DEG | 240 DEG | AMBIENT | 0 DEG | 120 DEG | 240 DEG | AMBIENT | | | | INSIDE DEWAR |
| 06:10:00 | 59.2F | 58.6F | 58.8F | | 40.6F | 41.2F | 40.9F | | 47.8F | 46.8F | 46.5F | | | | | -319.7F |
| | | | | 68.8F | | | | 60.9F | | | | 61.8F | | | | 5096.6M |
| 07:10:00 | 59.3F | 58.9F | 59.1F | | 40.4F | 41.1F | 41.0F | | 47.1F | 46.1F | 45.9F | | | | | -315.0F |
| | | | | 70.2F | | | | 62.4F | | | | 62.5F | | | | 80.5M |
| 08:10:00 | 59.9F | 59.2F | 59.6F | | 41.0F | 41.7F | 41.5F | | 47.4F | 46.5F | 46.2F | | | | | -319.7F |
| | | | | 69.7F | | | | 63.0F | | | | 63.3F | | | | 93.1M |
| 09:10:00 | 60.3F | 59.6F | 60.1F | | 41.0F | 41.8F | 41.5F | | 47.6F | 46.7F | 46.4F | | | | | -240.0F |
| | | | | 70.8F | | | | 62.3F | | | | 62.6F | | | | 81.7M |
| 10:10:00 | 60.2F | 59.7F | 60.1F | | 41.0F | 41.7F | 41.6F | | 47.4F | 46.6F | 46.3F | | | | | -319.6F |
| | | | | 70.2F | | | | 62.4F | | | | 63.6F | | | | 87.9M |
| 11:10:00 | 61.8F | 61.1F | 61.6F | | 41.5F | 42.4F | 42.0F | | 48.0F | 47.0F | 46.7F | | | | | -319.7F |
| | | | | 72.0F | | | | 63.7F | | | | 63.5F | | | | 117.3M |
| 12:10:00 | 61.6F | 61.1F | 61.2F | | 41.9F | 42.8F | 42.9F | | 48.4F | 47.5F | 47.2F | | | | | -319.6F |
| | | | | 71.1F | | | | 63.3F | | | | 65.2F | | | | 116.3M |
| 13:10:00 | 62.4F | 62.0F | 62.4F | | 42.6F | 43.4F | 43.1F | | 48.8F | 47.9F | 47.5F | | | | | -319.7F |
| | | | | 72.6F | | | | 64.5F | | | | 65.0F | | | | 110.0M |
| 14:10:00 | 62.3F | 62.1F | 62.1F | | 42.7F | 43.7F | 43.6F | | 49.0F | 48.1F | 47.8F | | | | | -319.8F |
| | | | | 72.3F | | | | 63.8F | | | | 64.7F | | | | 106.5M |
| 15:10:00 | 62.4F | 62.0F | 62.3F | | 43.1F | 44.0F | 43.9F | | 49.4F | 48.6F | 48.3F | | | | | -319.7F |
| | | | | 71.7F | | | | 63.9F | | | | 65.8F | | | | 101.3M |

CRYOLAB ROTARY BAYONET TEST -COLD- AFTER 200 CYCLES

| 0311 | 01 | 02 | 03 | 04 | 05 | 06 | 07 | 08 | 09 | 10 | 11 | 12 | 13 | 14 | 15 | 16 |
|---|---|---|---|---|---|---|---|---|---|---|---|---|---|---|---|---|
| 100 | TOP BAYONET | | | | MIDDLE BAYONET | | | | BOTTOM BAYONET | | | | | | | |
| 200 | 0 DEG | 120 DEG | 240 DEG | | 0 DEG | 120 DEG | 240 DEG | | 0 DEG | 120 DEG | 240 DEG | | | | | INSIDE |
| 300 | | | | AMBIENT | | | | AMBIENT | | | | AMBIENT | | | | DEWAR |
| 400 | | | | | | | | | | | | | | | | |
| 16:10:00 | 62.7F | 61.9F | 61.7F | | 43.5F | 44.3F | 44.3F | | 49.6F | 48.9F | 48.5F | | | | | -319.6F |
| | | | | 71.8F | | | | 64.1F | | | | 65.4F | | | | 115.7M |
| 17:10:00 | 61.4F | 60.4F | 60.4F | | 42.6F | 43.3F | 43.0F | | 49.0F | 48.2F | 47.9F | | | | | -319.5F |
| | | | | 71.3F | | | | 62.2F | | | | 63.5F | | | | 119.3M |
| 18:10:00 | 61.0F | 60.4F | 60.7F | | 41.8F | 42.7F | 42.7F | | 48.4F | 47.6F | 47.2F | | | | | -319.5F |
| | | | | 71.3F | | | | 62.9F | | | | 64.7F | | | | 80.5M |
| 19:10:00 | 60.9F | 60.1F | 60.5F | | 41.4F | 42.3F | 41.9F | | 48.0F | 47.2F | 46.9F | | | | | -319.6F |
| | | | | 71.1F | | | | 62.7F | | | | 63.9F | | | | 109.3M |
| 20:10:00 | 61.4F | 60.6F | 60.7F | | 41.4F | 42.2F | 42.1F | | 47.9F | 47.1F | 46.7F | | | | | -319.4F |
| | | | | 71.9F | | | | 62.3F | | | | 63.5F | | | | 101.6M |
| 21:10:00 | 61.1F | 60.4F | 60.7F | | 41.1F | 42.0F | 41.6F | | 47.6F | 46.8F | 46.4F | | | | | -319.5F |
| | | | | 70.7F | | | | 62.0F | | | | 62.7F | | | | 118.6M |
| 22:10:00 | 61.1F | 60.4F | 60.6F | | 40.7F | 41.6F | 41.5F | | 47.3F | 46.4F | 46.1F | | | | | -319.3F |
| | | | | 70.8F | | | | 61.5F | | | | 63.2F | | | | 115.1M |
| 23:10:00 | 60.9F | 60.1F | 60.4F | | 40.6F | 41.4F | 41.1F | | 46.8F | 46.0F | 45.7F | | | | | -319.5F |
| | | | | 70.7F | | | | 61.3F | | | | 62.4F | | | | 104.4M |
| 00:10:00 | 60.5F | 59.9F | 60.3F | | 40.5F | 41.4F | 41.4F | | 46.8F | 45.9F | 45.6F | | | | | -319.4F |
| | | | | 69.8F | | | | 60.9F | | | | 62.6F | | | | 111.6M |
| 01:10:00 | 60.4F | 59.7F | 60.1F | | 40.7F | 41.6F | 41.3F | | 46.7F | 45.7F | 45.4F | | | | | -319.5F |
| | | | | 70.0F | | | | 0F | | | | 62.7F | | | | 116.4M |

CRYOLAB ROTARY BAYONET

WARM TEST DATA
(prototype)

PROTOTYPE
UNIT NUMBER 1
MATE ID. 2.869

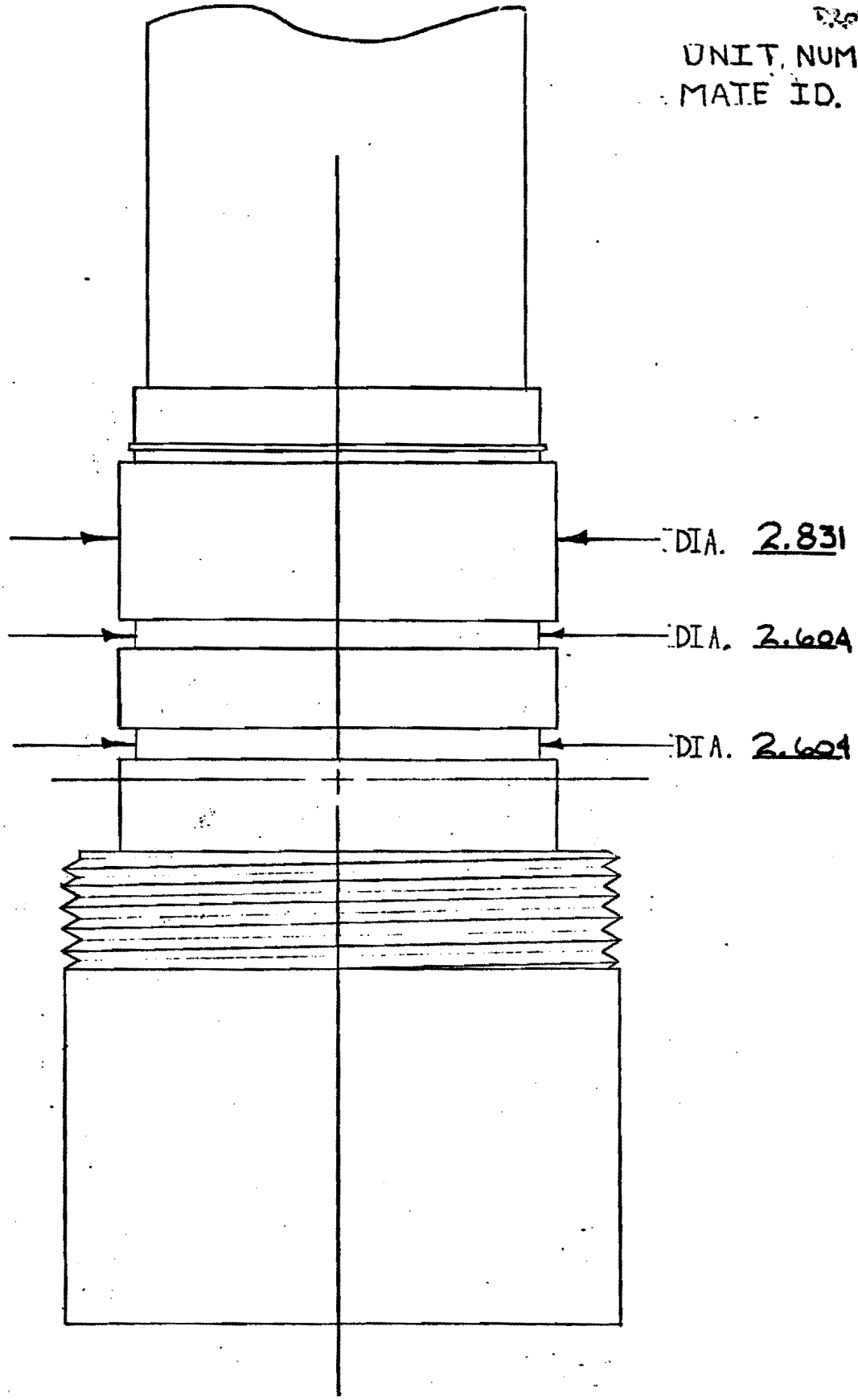
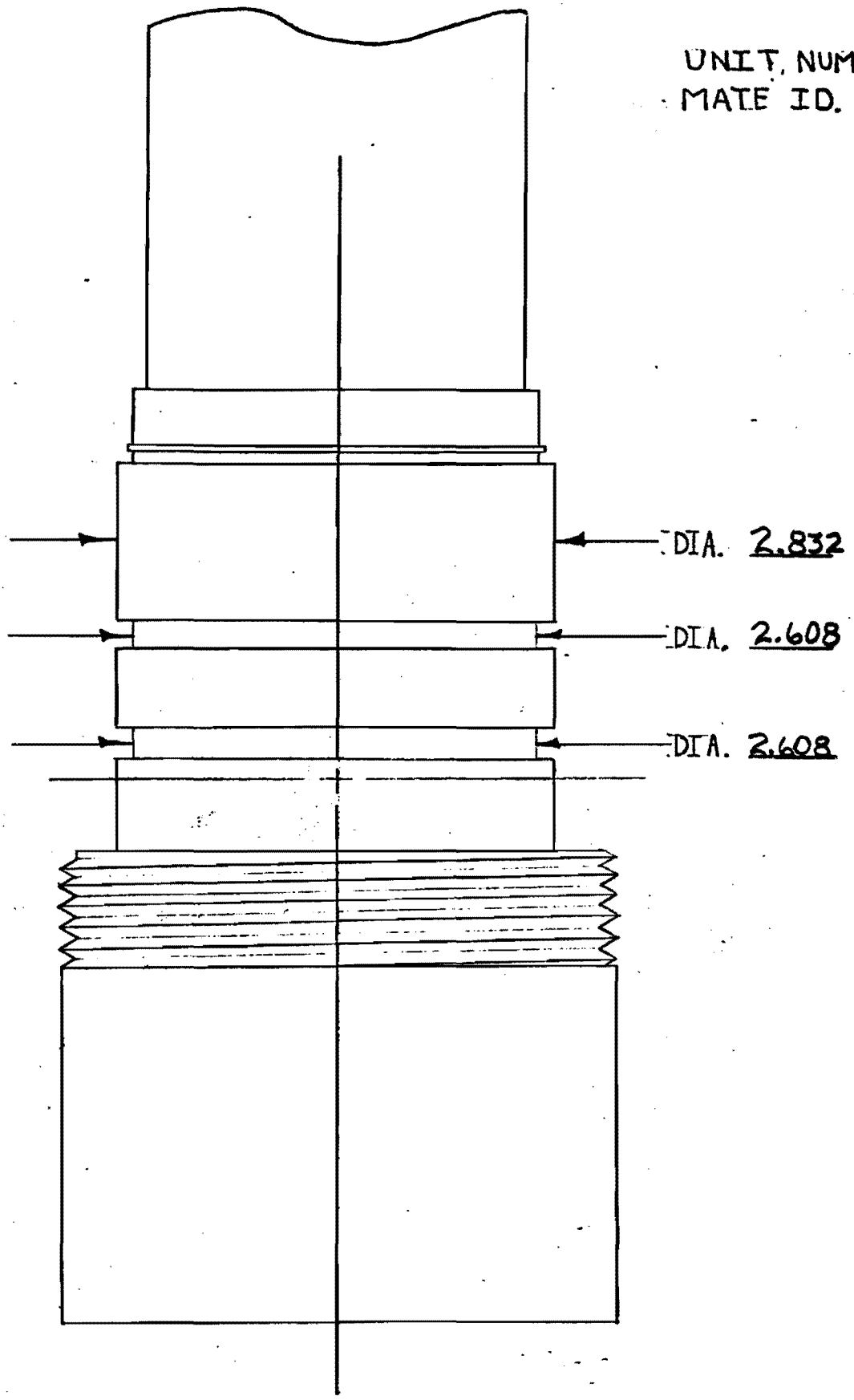
UNIT NUMBER 1
MATE ID. 2.867