Fermilab

TM-616
1220.000

FERMILAB TARGET AREAS AND TARGET TRAIN SYSTEMS*

July 1975

Jack Lindberg, John Grimson
John Simon and Dennis Theriot

*To be presented at 23rd Conf. on Remote Systems Technology Winter Meeting American Nuclear Society, Nov. 16-21, 1975, San Francisco, Calif.

ABSTRACT

Proton beam-line equipment and shielding in the 400 GeV accelerator external target areas will become radioactive. Target handling systems, similar to trains, have been designed and built to transport the radioactive equipment from the target areas to a central target service building for maintenance and repair. These radioactive tasks are carried out using servo manipulators.

The 400 GeV Proton Accelerator located at the Fermi National Accelerator Laboratory near Batavia, Illinois, is made up of a Linear Accelerator, Booster Accelerator Ring, and a Main Accelerator Ring, which delivers high-energy protons to three tangentially located experimental areas as shown in Figure 1. These are the Proton, Neutrino and Meson Sections of the Laboratory.

The Linac is approximately 500 feet in length and initially accelerates protons to a 200 MeV level. From here the protons are injected into the Booster which in turn accelerates the protons to an energy level of 8 GeV. Protons in this machine are moved in bunches with a nominal 4 sec. repetition rate. A transport system carries the 8 GeV bunches into the Main Ring. Here they are accelerated to 400 GeV. Many turns in the Main Ring are required to do this. The present intensity of the machine is 1×10^{13} proton-per-pulse (ppp) and it is within the extraction transport system's capability to deliver varying amounts of protons to the three experimental areas.

Each one of the experimental areas contains a number of beam lines. The upstream end of these beam lines house a main target area for all high intensity beams. In some instances, secondary targets are placed in low intensity beam lines. It is these main target areas that will be described with special emphasis being placed on the Neutrino Area because it has been in operation

the longest and contains the necessary facilities to assist in the remote repair and operational maintenance of equipment related to the other experimental sections.

The design intensity of the accelerator is 5×10^{13} ppp. As mentioned, 1×10^{13} ppp are current. Operating at these high intensities and energies is making all primary target areas radioactive to the point where they cannot be serviced manually. Obviously residual radioactivity will become even more of a problem in the future. In view of this, all three target areas were designed and built in a manner that allows for the eventual servicing of targets and beam line equipment remotely. In all cases, the equipment can be brought to a central target service area for remote maintenance. At present, some of the methods are cumbersome. Components have to be transported via shielded containers. The three areas have not been interconnected with a rail system.

The Neutrino Target Complex is made up of a number of different enclosures as shown in Figure 2. The target hall (Neuhall) houses beam line equipment. The target tube holds the target trains. Service building N-1, contains magnet power supplies and control equipment readouts. Maintenance and assembly of new trains takes place in the target service building. The portion of the target service building shown in dotted lines is currently under construction and is expected to be completed the early part of next year.

The Meson Target Area[1] is similar to the Neutrino excepting it is not constructed on as large a scale. It contains a target hall, target box, and service building. A target train is also required for the operation of this area.

The Proton Area is different in configuration. Target points are located in underground enclosures, completely below grade, shielded with 30-feet of earth. Steel bunkers surround target drawers which allow personnel to approach the targeting points. Figure 3 shows a schematic cross-section of the installation. These target drawers are withdrawn in Pb shields for removal and servicing.

NEUTRINO TARGET COMPLEX

The main beam line enclosure, Neuhall, is a concrete structure 14-feet wide by 12-feet high and approximately 300-feet long. The floor elevation of this structure is positioned on grade and the enclosure is covered with an earth berm approximately 30-feet thick. a five ton bridge crane is mounted on the ceiling and essentially runs the entire length of the enclosure. A railroad track (30" gauge) passes through the length of the enclosure and connects with tracks in the railroad tunnel. A small spur also runs into the upstream

alcove. At present, beamline equipment, mainly magnets and instrumentation, are mounted over these tracks. Bed-plates and transporters support this equipment. A more detailed description of this support and transfer system will follow as it is in principle, very similar to the target train system. A closed loop cooling water system is located in an alcove at the downstream end of Neuhall. This closed loop low conductivity water (LCW) system cools components such as targets, magnets, and beam dumps on the target trains. Beam passing through or immediately adjacent to water produces trituim. Free hydrogen is also troublesome. A closed loop system offers a closer means of control. Other LCW is provided for cooling the magnets and power supplies associated with Neuhall.

The target tube is an extension of the target hall. It is an earth-shielded 6-ft. dia. x ½ inch wall steel tube. External steel ribs reinforce the tube. A "U" shaped steel section is mounted in the lower half of the tube. It is to this "U" shaped steel section that the extension of the 30 inch gauge railroad rails in the target hall are mounted (see Figure 4). This target tube was initially designed for vacuum, but at present is not operated in that mode. The target tube is 200-ft. long and is connected to an evacuated 3-ft. dia. decay pipe approximately 1200-ft. long. (Mesons decay into neutrinos during their flight through this pipe.)

A vacuum-decay-pipe cover is placed at the junction of the 6-ft. dia. tube and the 3-ft. dia. pipe. This cover approximately 3-ft. in dia. is capable of being placed or removed remotely by a lifting mechanism mounted to the last bedplate of each target train.

The service building, N-1, contains all the power supply equipment for beam steering and focusing in the Neutrino Target Area. All instrumentation readouts such as beam diagnostic equipment and TV systems are also fed into this service building. All of this information is connected to a mini-computer. The mini-computer ties in with a master-computer. Virtually, all of this equipment is either controlled or monitored over a centralized computer system.

A railroad tunnel connects the beam line enclosure Neuhall, with the target service building. Presently only the portion shown in solid lines exist (Figure 2). That shown in dotted lines is under construction. The larger portion of the target service building is where both manual and remote servicing of trains and equipment is carried out. The narrower portion is for radioactive train storage only. The detail operations in this area will be covered in another paper in this conference.[2]

TRAIN SYSTEM

The beam line equipment for this target area is mounted on equipment bedplates as shown on the cross-section of Figure 4. Each bedplate is a fabricated steel or aluminum section approximately 20-ft. long and separated by a rounded-hardened-steel spacer called a tongue. These tongues accurately space the bedplates in the "Z" or lengthwise direction. In the case of the target tube, the bedplates are supported on prealigned hardened support blocks located every 10-ft. along the internal edges of the "U" shaped section. All beamline equipment, i.e., magnets, target beam stop/collimators, are specially mounted upon these plates and prealigned prior to installation in the tube. The mounting stands are special as they apply to remote maintenance. Optical alignment techniques are in current use. A somewhat more detailed explanation of the optical techniques will follow in another section.

The target tube in the Neutrino Area contains up to ten bedplates. Utilities for the beam line equipment run the entire length of the bedplate-train. These utilities include such services as power and control cables, water-cooled high current bus, low conductivity cooling water, compressed air and inert

gas lines, etc. The utility runs are designed and fabricated in a manner that provides compliance so that trains can negotiate all the track curves in the system without the need for decoupling. The 4" dia., N-7, evacuated beam pipe is connected between bedplates with a 12" long bellows. Two beams pass through each train; the NØ and the N-7, 13.5" to the right.

Beam line equipment associated with the target tube is loaded from the upstream end using special transporters that operate much like railroad cars. Transporters approximately 20-ft. in length, move the bedplates into position within the tube.

The target tube is loaded in the following manner: The transporters move the preassembled equipment-bedplates, in a slightly elevated position, into the target tube. The bedplates are elevated to clear the support blocks mounted to the "U" shaped section within the tube. Four vertically actuated hydraulic jacks located on the transporters perform this function. After the bedplates have been driven to the proper "Z" position in the tube, they are lowered onto the support blocks which in turn support the load of the bedplate and attendant equipment. Horizontally actuating hydraulic jacks on the transporter also position the bedplate in final yaw, or line, alignment on the support blocks. All bedplates are driven to the right until

they press against the prealigned yaw screws as shown in Figure 4. After positioning and aligning the bedplates, the transporters are removed from beneath the load. A diesel locomotive is used for moving these transporters and fully loaded trains.

Once the transporters are removed, it is possible to fill the resulting space with shielding cars. Currently, shield cars are not in use in the Neutrino Area. Shield cars are of especial value in attenuating backsplashing neutrons from activating the entrance to the target tube. Our operations are approaching a point where upstream shield cars may be required.

Personnel are able to manually connect and disconnect the utility lines servicing the magnets, targets, beam stops, instrumentation, etc. This is always done at the upstream end of the target tube. Just prior to connecting utilities, an optical instrument check is made (using optical target boxes) to verify the alignment of the bedplates. After utility connections are made and final equipment checks are carried out, Neuhall equipment is brought into position and installed.

The Neuhall equipment support system is very similar to that used in the target tube, with probably one major exception. The bedplates remain on their transporters and are not mounted on support blocks. This provides that a major portion of the support system in

Neuhall is as mobile as the target tube train system.

The removal of beam line equipment from Neuhall and the target tube is accomplished in much the same way as loading. Once utility disconnects have been completed manually and the positioned transporters have raised the load within the tube, personnel are required to leave the area. This is necessary since radioactive portions of the load pass through Neuhall on the way to the target service building.

A narrow gauge railroad (30") runs throughout the Neutrino Target Area complex (see Figure 2). This includes the target tube, Neuhall and the target service building. The rails are commercially available sections, shimmed, and mounted on the concrete floors in the enclosures.

Various spurs and switches have been and will be installed to satisfy the logistical requirements of moving the different types of loads utilized in this area. During the initial phase of Fermilab operations, only a limited number of experiments were undertaken and as a consequence, only a minimum amount of track was installed to route the movements of transporter cars and the locomotive. Only one train load was in existence at that time. Track extended through the railroad tunnel only. No portions of the target service building existed. As experiments increased and the

demands for new and different equipment increased, trackage, switches and spurs were added. At present, track is being extended as shown in the dotted portion of Figure 2.

The primary control of train loads traveling over the track system is manual. All switches are thrown manually and the locomotive is manned. Personnel working as teams move the trains through the "blind" spots of the complex. From a radiation standpoint, this is less than ideal because men standing in line of sight of one another are sometimes adjacent to radioactive train loads. The time is approaching for automatizing this portion of the system - remotely controlled switches and locomotives. A new, modified, narrow locomotive is under construction. This locomotive is battery operated and will lend itself to eventual radio control. Closed circuit TV would be used for viewing.

It has always been the design philosophy that radioactive target area equipment from all the experimental sections of the Laboratory be transported to a central facility for remote and manual service. The logical extension of this philosophy would suggest that a railroad track system link all the experimental target areas to the target service building. As mentioned previously, this track does not exist, but nothing in the overall design precludes it for the future.

The temporary solution to transporting highly radioactive equipment that requires remote repair is to place the items in shields and transport them to the target service building. This has been done with Proton target drawers. Up until now, Meson Target Area repairs have been effected manually but at a great expense in radiation exposures to personnel. Fortunately, the Meson Area operation utilized only one target train geometry and it is seldom withdrawn from the target box; however, the future of the Meson Area is also changing. New target trains are being contemplated.

At the beginning of Neutrino experimental operations some years ago, only one target train existed. It was the dichromatic load. Since then, two more target train geometries have been placed in operation. They are the triplet and horn loads.[2] In principle, the front end, (magnets that steer and focus the beam on target) remains the same for all of these target geometries. A brief description of the various loads follows:

1. <u>Dichromatic</u>...

   ...Provides sign and momentum selected beam of mesons that decay into muons and neutrinos. The π and K mesons decay into two separate energies of neutrinos, hence, the name. This load can be used for either muon or neutrino experiments.

2. Triplet (shown in Figure 4 & 6)...

   ...Provides poorly momentum selected beam of mesons. It consists of quadrupole focusing system with focus in Enclosure 100. It ultimately maximizes muon yield.

3. Double-Horn...

   ...Provides a both poorly sign and momentum selected beam of mesons which decay to produce the most intense neutrino beam Fermilab has. It is primarily intended for use with the 15-Ft. dia. Bubble Chamber.

In the early days of neutrino running, only one beam of protons was directed through Neuhall with a minimum number of components. After about 6 months operation, a second beam (much lower in intensity) was split off to the right and targeted in Enclosure 100. The first method of mounting equipment in Neuhall was on specially built stands. An overhead crane moved this equipment to the side of Neuhall in order that the railroad track could be cleared for the target train. It did not take long for the front-end design to become more and more complex. Almost the entire length of Neuhall is now occupied with some type of beam line device. As the congestion grew, we decided to mount all the equipment in

Neuhall on bedplates and transporters similar to the target trains. This has proved to be a great time saver when equipment is changed. Since the beams passing through Neuhall are well focused and directed, the equipment in Neuhall is only slightly radioactive. With the hall load on transporters, we effectively have 4 train loads to move during a change-over.

ALIGNMENT

The alignment of all components on moving loads is accomplished employing optical techniques. An overhead mounted optical tooling bar and a Brunson jig transit are used for locating "line" on all components. An N-3 Wild transit is used to establish elevations. Instruments mounted on the tooling bar are referenced to a known offset line running through Neuhall. The elevations are referenced to known bench marks located at intervals along the walls of Neuhall.

To align equipment on a given bedplate, the procedure is as follows: Four support posts are located just downstream of the overhead tooling bar. Adjustable support blocks are located in pockets of these posts and are at the same elevation as those in the target tube. Yaw screws are located in the right set of posts much like those in the target tube. A bedplate with its attendant equipment is placed on these reference

support posts, and aligned in both elevation and line directions. This is accomplished by adjustment screws located on the equipment mounting stands. The tolerances required for alignment varies with the type of equipment. Dipoles and quadrupole magnets are aligned so their magnetically optical center falls within a circle, .020" diameter. SWIC's, PWC's, and other beam position indicating devices are located to within ± .005 inches. Collimators and beam dumps have less stringent requirements. Targets are in the ± .005 inch category.

Up to this point in time, all final alignment has been carried out at the alignment station in Neuhall. The method of operation is changing in order that time required for alignment does not encroach upon beam time for the Neutrino Area. A similar alignment station is now in operation in the target service building. New and modified trainloads can now be aligned before entering Neuhall. In the past, all adjustments of equipment have been made manually, but moving the alignment station to the target service building now provides that adjustments can be made remotely with the servo-manipulator if the situation warrants.

Optical target boxes are located along edges of the bedplates. These boxes contain cross-wire rings mounted on micrometer adjustment heads. The intersection of the wires verifies the location of bedplates in space

both in line and elevation. The downstream target boxes are back-lighted, thus, a T-2 Wild transit set-up at the entrance of the target tube can view along the sight path of these boxes and verify the position of the wire intersections of every target box. An attachment that fits over the optics of the T-2 provides a direct readout offset from line in thousands of an inch.

OPERATIONAL HISTORY

The Neutrino Area has been in operation for almost 4 years. The trains are changed alternately as the experimental schedule requires and they remain in the target tube from 6 to 12 weeks. Another major reason for removing a train from the target tube is to repair a critical component failure.

A change-over or turn-a-round (changing trains) generally pursues the following procedure: Beam is turned off to Neuhall approximately 8 hours before personnel enter the target complex to work on the hall and target trainloads. The hall is surveyed for residual radiation after this waiting period and levels are posted. Personnel then enters the area and disconnect all utilities to the hall and trainloads. Vacuum pipes in Neuhall are also disconnected and in some cases, moved aside for temporary storage. The large vacuum

pipe may be seen in Figure 5. The hall load is moved through the railroad tunnel to one of the storage tracks associated with the target service building for storage. Empty transporters are then brought in and placed under the target load in the tube. This train is removed from the tube and remotely-radiation-surveyed to determine the most radioactive portions on the train. If the reason for pulling was a component failure, the train is generally repaired manually right in Neuhall or if remote repair is necessary in the target service building. If it is a turn-a-round, the train is stored in the target service building complex. Once the target complex has been cleared, a new train is brought in and final component and instrumentation check-outs are performed in Neuhall. The target load is placed and transporters removed. Time is set aside, usually the night shift, for power tests. This is especially crucial since no separate test facility currently exists. Ideally, we would like to test all trains before a run. After successful testing and verification of alignment is complete, the hall load is brought back in and utilities reconnected.

The time to accomplish this removal of 500-ft. of beam line and the replacement of it is in the order of three days. The first day, one shift, sees the new train in Neuhall. Between one and two shifts of the

second day are devoted to final preparations on the target train. The last day, sometimes less than one shift, is used for hall set-up. The numbers of personnel required for this work varies but normally there are no more than 6 to 8 in the area at a time.

After an extensive run, residual radioactivity levels in magnets in Neuhall may run between a few milli-rem per hour to hundreds of mr/hr. The Lambertson type magnets (beam splitters) almost always have the highest level of activity. We also have been experiencing an increasing amount of particulate activity. The backbround in Neuhall is twice MPC and thus, requires the use of shoe covers. The airborne particulate material for the most part is well below MPC, so no auxiliary breathing apparatus is required. Gaseous airborne activity of carbon 11 and oxygen 14, 10 to 100 picocuries/milliliter are found in the air immediately after beam off. These decay with a half-life of 20 minutes.

Residual radioactivity on the target trains is increasing. Levels encountered approximately eight hours after beam off are up to 200 R/hr. at one foot at the hottest spot. Other areas might be in the 10 to 50 R/hr. at one foot. These fields are found near components employing high "Z" materials such as collimators and beam dumps. Particulate contamination on train

components is becoming very troublesome. Protective clothing and face masks are used during decontamination processes. Levels up to 300 nanocuries per cm^2 have been encountered. Manual decontamination and work in these areas is very carefully controlled by radiation safety personnel.

Currently, the total man-rem exposure for a turn-around has been on the average of 3 man-rem. Although this is an acceptable number for now, based on allowable government regulations, it is far from an ideal situation.

Recently, remote decontamination and removal of target train components has taken place. This work is carried out with the assistance of the servo-manipulators located in the Target Service Building. Although the time for completing tasks is increasing, (limits imposed by remote operations) personnel are no longer exposed to high fields of radiation. In the very near future, a major portion of target train servicing will have to be done remotely. We are realistically entering this era.

ACKNOWLEDGEMENT

The Fermi National Accelerator Laboratory is operated by the Universities Research Association, Inc., under contract with the U.S. Energy Research and Development Administration.

R E F E R E N C E S

1. "Target Handling System for the 200 GeV Proton Accelerator," by J. Grimson, J. Lindberg, A. Maschke, J. Simonton, and J. Simon. Proceedings of 18th Conference Remote System Technology (1970).

2. "Design of the Fermilab Neutrino Remote Target Maintenance System, by J. Simon, J. Grimson, J. Lindberg, and D. Theriot. Proceedings of 23rd Conference Remote System Technology (1975).

3. "Design of the Fermilab Neutrino Horn Train System Referenced to Radioactive Maintenance," by J. Grimson, J. Lindberg, J. Simon, and D. Theriot. Proceedings of 23rd Conference System Technology (1975).

4. "Some Remarks on Extraction and Targeting at NAL (Fermilab)," 7th International Conference on High Energy Accelerators, Yerevan, Armenia, USSR (1969).

5. "Design Report, (Fermi) National Accelerator Laboratory, July 1968.

6. "Particle Beams," (Fermi) National Accelerator Laboratory, Summer Study, Vol. 1 (1969)

7. "Bubble Chambers,"(Fermi) National Accelerator Laboratory, Summer Study, Vol. 2 (1969)

8. "Electronic Detectors," (Fermi) National Accelerator Laboratory, Summer Study, Vol. 3 (1969)

9. "Experiments," (Fermi) National Accelerator Laboratory, Summer Study, Vol. 4 (1969)

FIGURE TITLES

for

Fermilab Target Areas

and

Target Train Systems

Figure 1 ----- Plan View of Fermilab

Figure 2 ----- Plan View of Neutrino Target Area

Figure 3 ----- Cross-section of Proton Target Area.

Figure 4 ----- Cross-section of Target Tube with Triplet Installed.

Figure 5 ----- Overview of Neuhall with Beam Line Equipment Installed.

Figure 6 ----- Triplet Train in Storage Tunnel

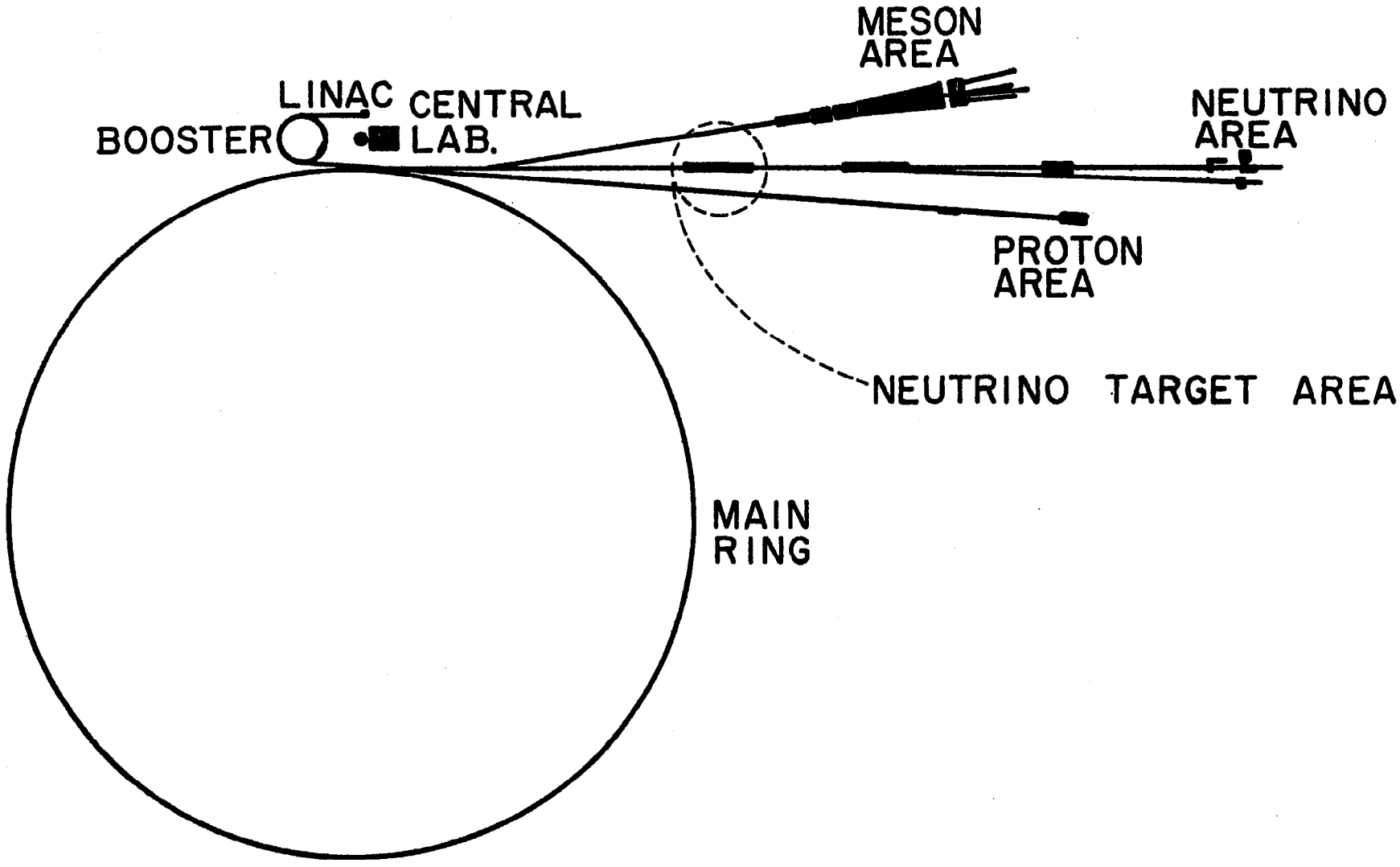
MESON
AREA
LINAC
CENTRAL
BOOSTER
LAB.
NEUTRINO
AREA
PROTON
AREA
NEUTRINO TARGET AREA
MAIN
RING

FIGURE 1

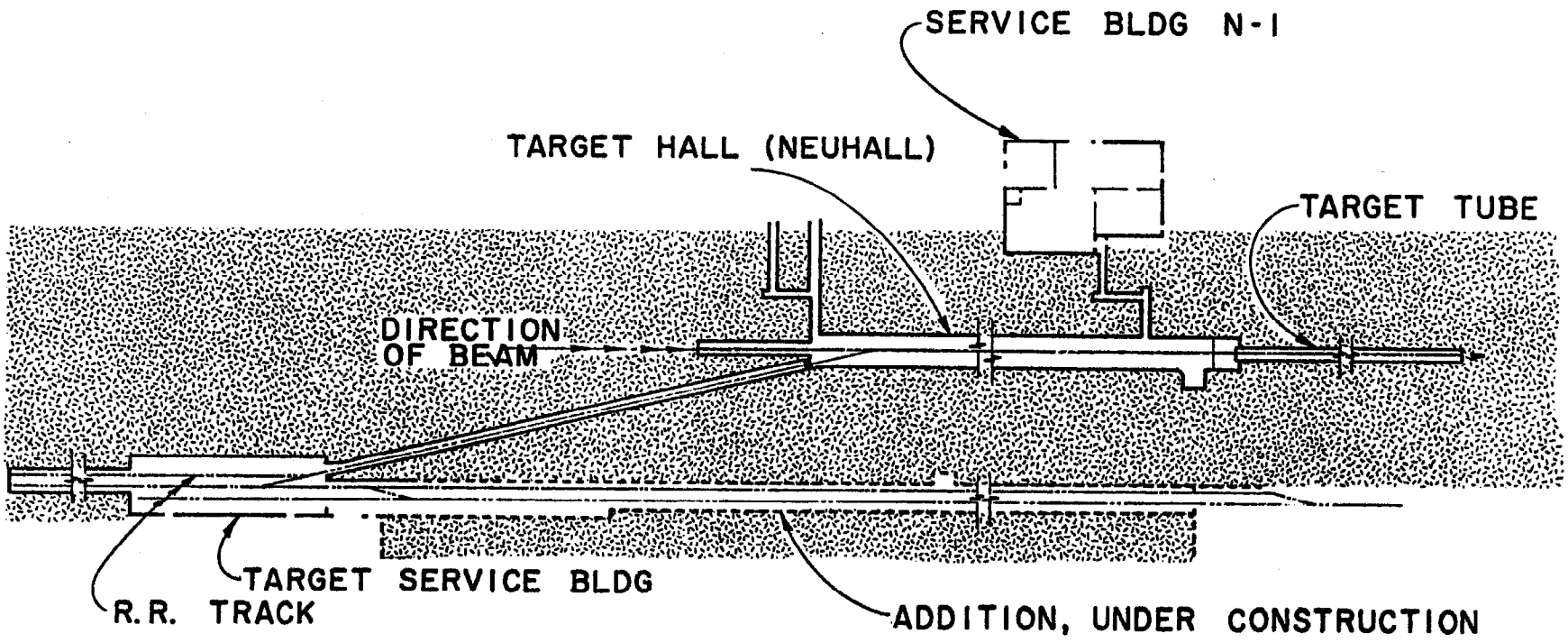
SERVICE BLDG N-I
TARGET HALL (NEUHALL)
TARGET TUBE
DIRECTION
OF BEAM
TARGET SERVICE BLDG
R.R. TRACK
ADDITION, UNDER CONSTRUCTION

FIGURE 2

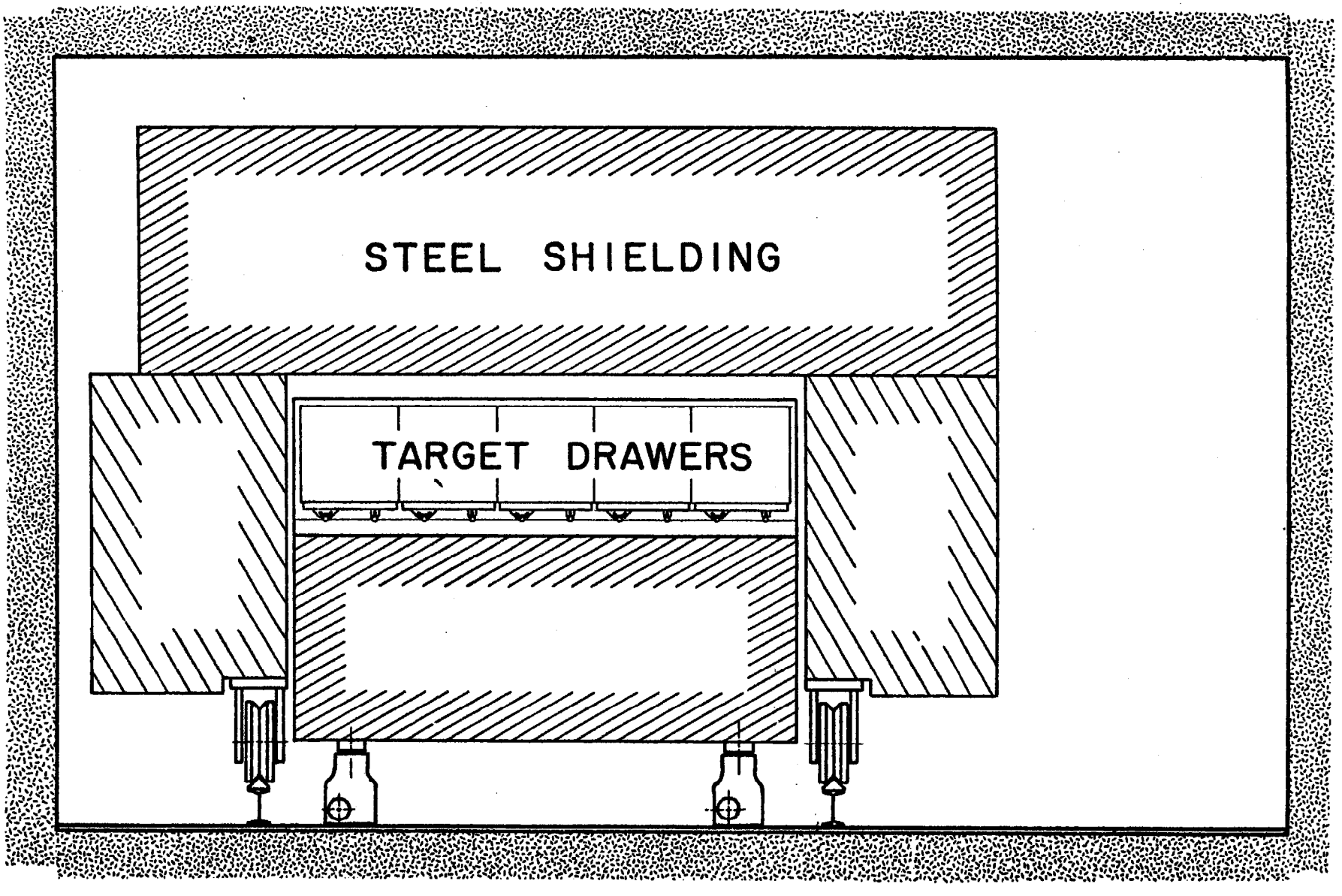

FIGURE 3

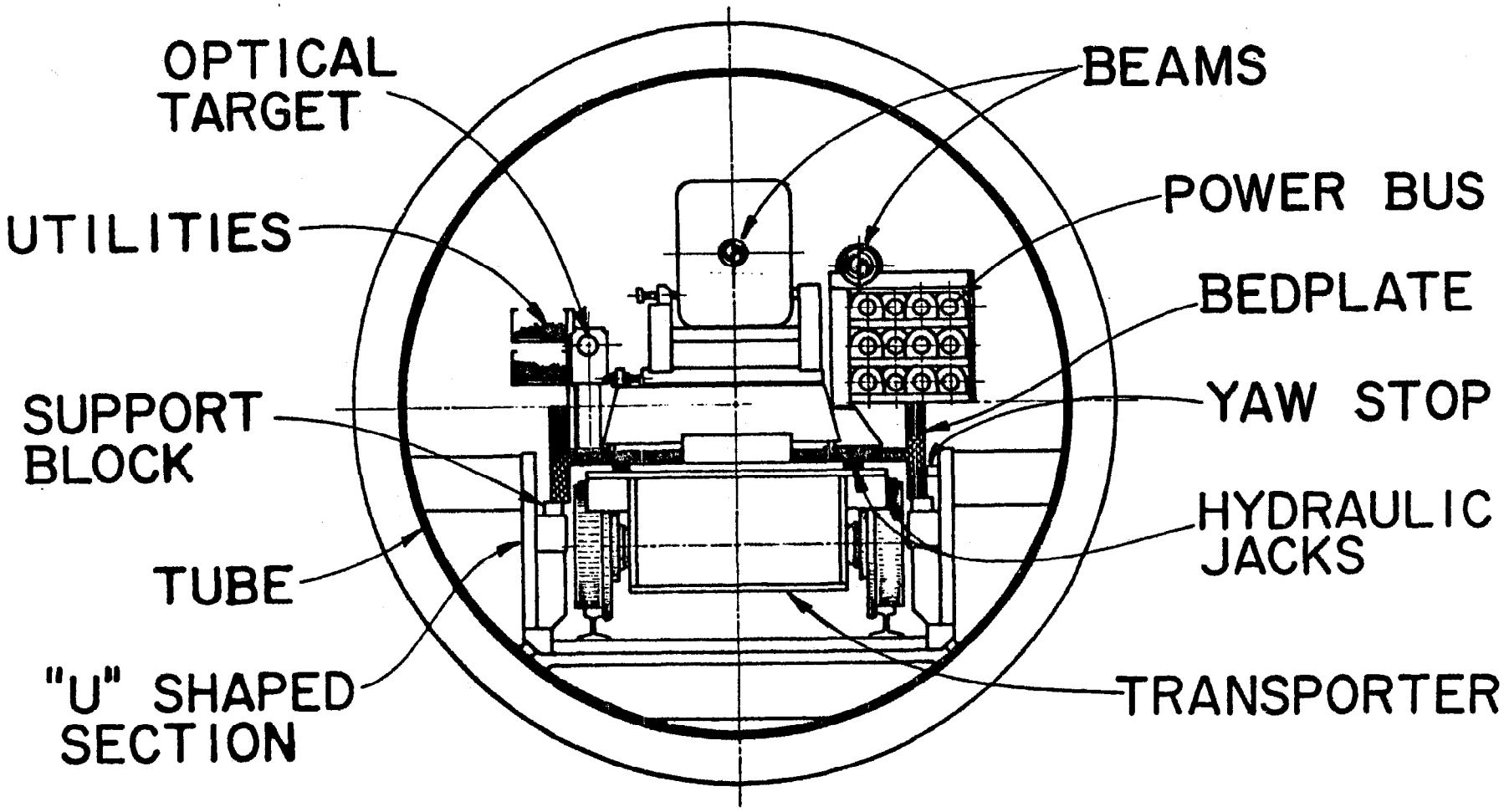
OPTICAL TARGET
UTILITIES
SUPPORT BLOCK
TUBE
"U" SHAPED SECTION
BEAMS
POWER BUS
BEDPLATE
YAW STOP
HYDRAULIC JACKS
TRANSPORTER

FIGURE 4

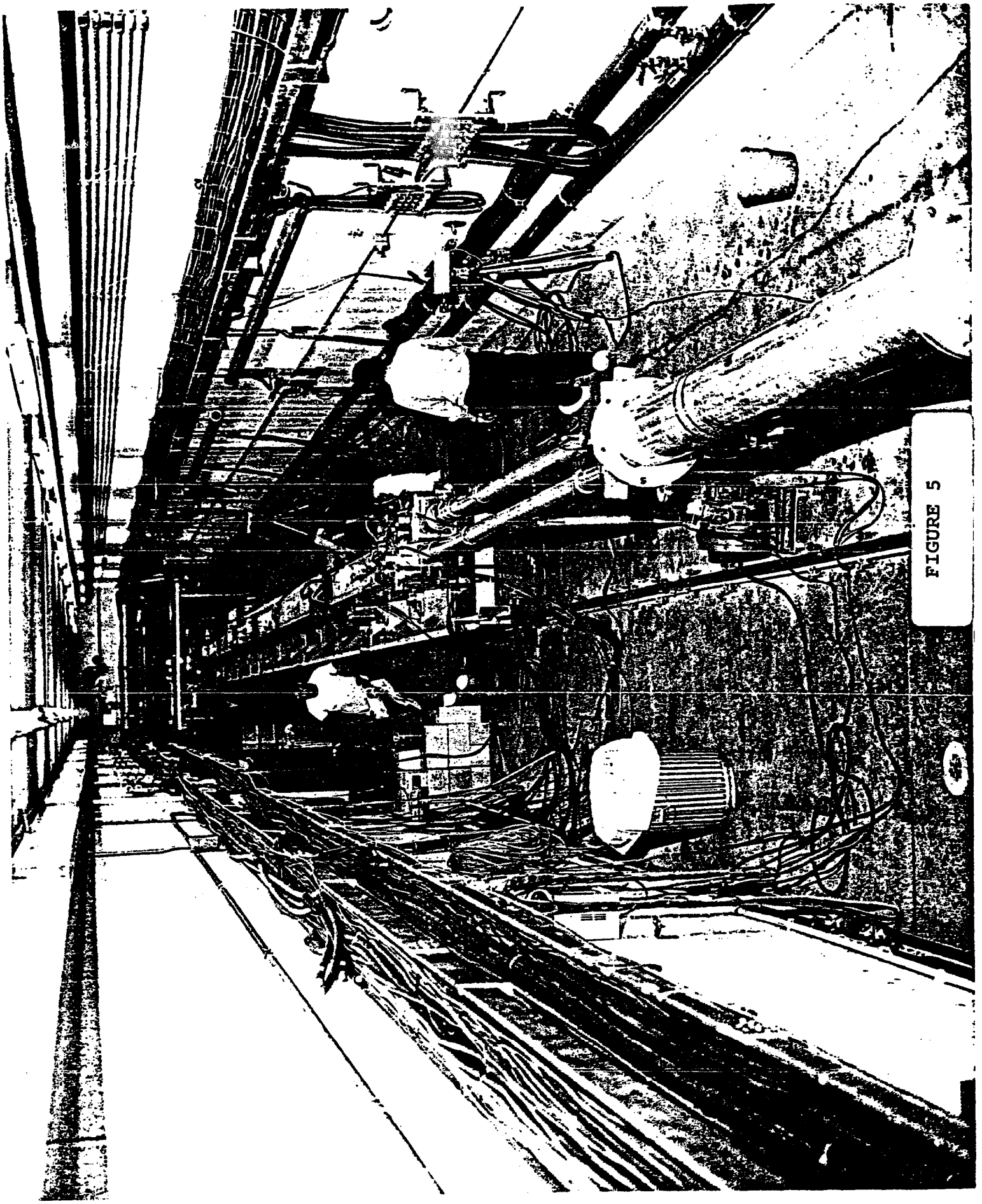

FIGURE 5

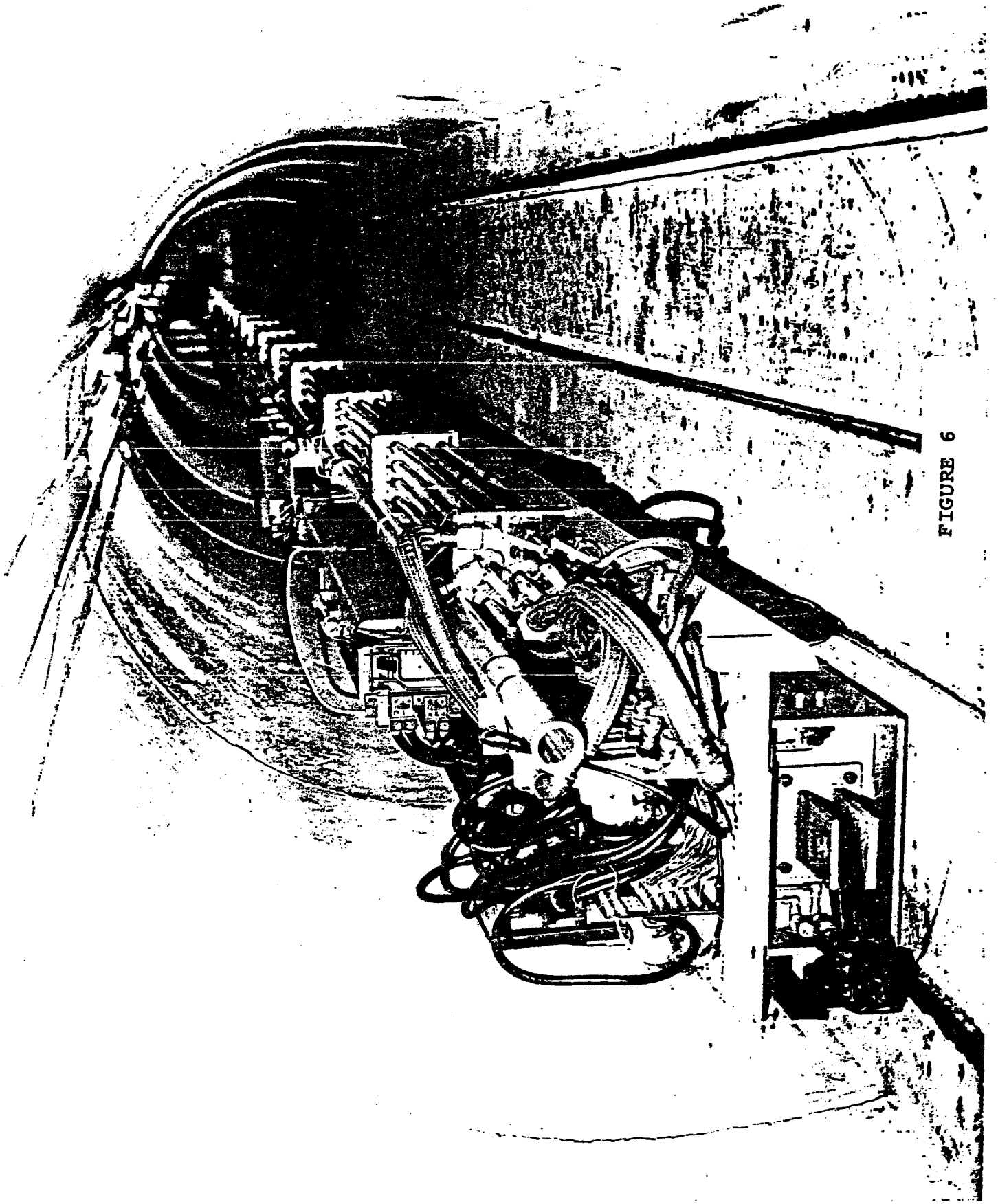

FIGURE 6