Bechis, D. J.

E-468

0 1160 0[illegible]

FERMILAB

JAN 10 1979

LIBRARY

# A Search For Long-Lived Neutral Heavy Leptons in 400 GeV/c Proton-Nucleon Interactions

Ph.D. Thesis

by

Dennis J. Bechis

PP No. 79-054

UNIVERSITY OF MARYLAND
DEPARTMENT OF PHYSICS AND ASTRONOMY
COLLEGE PARK, MARYLAND

LIBOFFCE
FERMILAB
THESIS

APPROVAL SHEET

Title of Dissertation: A Search For Long-Lived Neutral Heavy Leptons in 400 GeV/c Proton-Nucleon Interactions

Name of Candidate: Dennis John Bechis

Doctor of Philosophy, 1978

Dissertation and Abstract Approved: _____

Chung Y. Chang

_____

Phillip H. Steinberg

Professors

Department of Physics and Astronomy

University of Maryland

Date Approved: _____

# CURRICULUM VITAE

Name: Dennis John Bechis.

Permanent address: 1810 Metzerott Road Apt. B4, Adelphi, Maryland 20783.

Degree and date to be conferred: Ph.D., 1978

Date of birth: August 10, 1951.

Place of birth: Boston, Massachusetts.

Secondary education: Boston Latin School, Boston, Massachusetts; graduated in June, 1969.

| Collegiate institutions attended | Dates | Degree | Date of Degree: |
|---|---|---|---|
| Harvard College | 9/69 - 6/73 | B.A. | 6/73. |
| University of Maryland | 9/73 - 10/78 | M.S. | 6/76. |
| | | Ph.D. | 12/78. |

Major: High Energy Experimental Elementary Particles.

Minor: Modern Physics.

Professional publications:

1) "A High-Resolution Polarization Survey of the North Polar Spur", G. Westerhout and D.J. Bechis, Galactic Radio Astronomy, IAU Publication 1974, p. 151-154.

2) "A Search for Long-Lived Neutral Heavy Leptons in 400 GeV/c Proton-Nucleon Interactions", D.J. Bechis, C.Y. Chang, T.W. Dombeck, R.W. Ellsworth, R.G. Glasser, K.H. Lau, E.V. Sager, P.H. Steinberg, and L.J. Teig, Physical Review Letters 40, 602 (1978).

3) "Sensitivity of a Search for Long-Lived Neutral Heavy Leptons ($L^{\circ}$) Arising from $\tau^{+}\tau^{-}$ Pair Production in 400 GeV/c Proton Interactions", D.J. Bechis, C.Y. Chang, T.W. Dombeck, R.W. Ellsworth, K.H. Lau, E.V. Sager, P.H. Steinberg, and L.J. Teig, to be published in the Proceedings of the 1978 International Conference on Neutrino Physics and Neutrino Astrophysics, Purdue University.

4) "Neutrino-Induced Heavy Lepton Pair Production at High Energies and Multi-Muon Events", D.J. Bechis, C.Y. Chang, and K.H. Lau, University of Maryland Physics Publications 78-161 and 78-206.

Professional positions:

Research student with Orbiting Solar Observatory project at Harvard College Observatory, Cambridge, Massachusetts, 1969-1972.

Research student with Solar Group at Kitt Peak National Observatory, Tucson, Arizona, summer 1971.

Research student at National Radio Astronomy Observatory, Green Bank, West Virginia, summer 1972.

Research student at Arecibo National Observatory, Arecibo, Puerto Rico, summer 1973.

Teaching Assistant at University of Maryland in Astronomy and Physics, 1973-1976.

Research student in Elementary Particle Theory Group at University of Maryland, 1975-1976.

Research assistant in High Energy Physics Group (experimental) at University of Maryland, 1977-present.

Research Associate at Rutgers University, New Jersey, Fall 1978.

Member of the American Physical Society, 1974-present.

ABSTRACT

Title of Dissertation: A Search for Long-Lived Neutral Heavy Leptons in 400 GeV/c Proton-Nucleon Interactions

Dissertation directed by: Professors Chung Y. Chang and Phillip H. Steinberg
Department of Physics and Astronomy
University of Maryland

The production of long-lived neutral heavy leptons ($L^\circ$) was searched for in 400 GeV/c proton-nucleon interactions in a magnetized beamdump. It was required that the $L^\circ$'s be produced without accompanying muons of energy greater than 10 GeV, that they traverse the beamdump, and that they decay into charged particles in a 9.2 m long evacuated pipe whose front end was located 8.9 m downstream. These decay products were analyzed by a magnetic spectrometer employing multi-wire proportional chambers and scintillation counters. In a total flux of $2.8 \times 10^{13}$ protons incident on the beamdump, no evidence was found for such $L^\circ$'s. The upper limit on the cross-section $\sigma$ for the production without accompanying muons of $L^\circ$'s with Feynman $x = P_{\parallel}^{cm}/P_{max}^{cm} \gtrsim 0.2$ and $\theta_{lab} \lesssim 10$ mr and with branching ratio B into two charged particles is $\sigma B \lesssim 3.9 \times 10^{-35}$ $cm^2$/nucleon at the 90% confidence level for masses $m_{L^\circ} \lesssim 1.0$ GeV/$c^2$ and lifetimes between $10^{-10}$ and $10^{-8}$ seconds.

# A Search For
# Long-Lived Neutral Heavy Leptons
# in 400 GeV/c Proton-Nucleon Interactions

by

Dennis John Bechis

Dissertation Submitted to the Faculty of the Graduate School
of the University of Maryland in partial fulfillment
of the requirements for the degree of
Doctor of Philosophy
1978

# DEDICATION

I wish to dedicate this work to

my parents,

Ken and Donna,

and Greg and Steve

ACKNOWLEDGEMENTS

I want to thank my advisors Professors Phillip Steinberg and Chung Chang for their continuous support, advice, and encouragement during my graduate studies. I am grateful to have had the opportunity to work with each of them on the experiment searching for neutral heavy leptons and on a separate experiment searching for the transition of muonium and antimuonium. It has been a pleasure to learn from and to work with Phil. I am also glad to have worked with him on an experiment searching for the production of axions in an electron beamdump. I have enjoyed many stimulating conversations with Chung about other problems in physics. My association with him resulted in detailed calculations of the pair production of heavy leptons in high-energy neutrino interactions via the Bethe-Heitler process.

It has been a pleasure to work with Dr. Lucien Teig on all of the above experiments and to benefit from his wide experience. I also thank Professor Robert Glasser who calibrated the center positions of the multiwire proportional chambers and who provided invaluable assistance and encouragement on the computer analysis of the neutral heavy lepton data. I am also grateful to Professor Tom Dombeck, Kwong Lau, and Earl Sager who all gave enthusiastic assistance as well.

I want to thank the neutral-hyperon groups of Rutgers University, the University of Michigan, and the University of Winconsin for the use of their equipment and for the assistance they gave in the operation of their spectrometer and in the analysis of the data. This equipment consisted of a collimated sweeping magnet, six multi-wire proportional chambers, a superconducting magnet, and the associated read-out electronics. Moreover, the bulk of the analysis programs used were written and debugged by these groups. In particular, I want to thank Lindsay Schachinger, Tim Cox, Carol Wilkinson, and Marleigh Scheaff for helpful discussions and assistance with the equipment.

The staff of the Meson Laboratory at Fermilab, in particular Herman Haggerty, provided enthusiastic support for this experiment.

I acknowledge helpful discussions with Professors Robert Ellsworth, Andris Skuja, George Snow, and Guarang Yodh of the University of Maryland.

Finally, I want to thank Peggy Capps who has done an excellent job in typing this thesis. My thanks also go to Vivian Ingram who typed certain portions and to Lionel Watkins and Joan Wright of the drafting office in the Physics Department who prepared many of the figures.

TABLE OF CONTENTS


| Chapter | Page |
|---|---|
| DEDICATION | i |
| ACKNOWLEDGEMENTS | ii |
| LIST OF TABLES | vi |
| LIST OF FIGURES | vii |
| I. INTRODUCTION | 1 |
| II. HEAVY LEPTONS: THEORY AND EXPERIMENT | 3 |
| A. Motivations to Search for Heavy Leptons | 3 |
| B. Production of Various Types of Neutral Heavy Leptons $L^{\circ}$ | 15 |
| C. Decays of $L^{\circ}$'s | 18 |
| D. Searches for Heavy Leptons in $e^+e^-$ Annihilations | 21 |
| E. Searches for Heavy Leptons in Neutrino Interactions | 27 |
| F. Searches for Heavy Leptons in Proton and Electron Interactions | 32 |
| III. THE SEARCH FOR NEUTRAL HEAVY LEPTONS | 39 |
| A. General Aspects of the Experimental Design | 39 |
| B. Proton Beam | 45 |
| C. Magnetized Beamdump | 47 |
| D. Charged Particle Counter Array | 48 |
| E. Spectrometer | 53 |
| F. Trigger Electronics and Running Conditions | 59 |

IV. DATA REDUCTION . . . . . 61

A. Track Reconstruction . . . . . 61

B. Requirements for 2-or-More-Body $L^\circ$ Decays . . . . . 63

C. Analysis of Multi-Track Events . . . . . 65

D. Interpretation and Elimination of Background Events . . 75

V. EXPERIMENTAL RESULTS . . . . . 77

A. Spectrometer Acceptance . . . . . 77

B. Upper Limit on $\sigma B$ . . . . . 83

VI. DISCUSSION OF RESULTS . . . . . 85

A. Introductory Remarks . . . . . 85

B. Sensitivity to $L^\circ$'s Arising from $\tau^+\tau^-$ Decays . . . . . 86

C. Sensitivity to $L^\circ$'s Arising from $F^\pm$ Meson Decays. . . . 92

D. Sensitivity to $L^\circ$'s Arising from the Decays of New Heavy Particles . . . . . 95

VII. CONCLUSIONS . . . . . 98

REFERENCES. . . . . .100

## LIST OF TABLES

Table Page

1. Branching Ratios for Electron-like Neutral Heavy Leptons $E^{\circ}$ . . . . . 19
2. Dimensions of the Experimental Apparatus . . . . . 57
3. The Data Sample : Types and Numbers of Events . . . . . 66
4. Characteristics of the Two Unknown Events . . . . . 73

LIST OF FIGURES


Figure Page

1. Plan View of Experimental Apparatus . . . . . 44
2. Trigger Electronics . . . . . 49
3. Charged Particle Flux through Scintillation Counters A-O . 51
4. Multi-wire Proportional Chamber Construction . . . . . 54
5. Invariant Masses of Events Found in Preliminary Analysis . 67
6. Transverse Momentum of Decay Particles Found in Preliminary Analysis . . . . . 68
7. Momentum Along Beam-axis of $K^\circ_S$ and $\Lambda^\circ$ Events Found in Preliminary Analysis . . . . . 70
8. Intersections of the Trajectories of Neutral Parent Particles with the Backface of the Beamdump Magnet . . . . . 71
9. Acceptance of the Spectrometer for the Decay $L^\circ \to \mu + \pi$ as a Function of $\tau_{L^\circ}$ and $m_{L^\circ}$ . . . . . 78
10. Maximum Acceptance of the Spectrometer for the Decay $L^\circ \to \mu + \pi$ for $m_{L^\circ} = 0.5$ GeV/$c^2$ as a Function of x and $P_T$ . 80
11. Maximum Acceptance of the Spectrometer for the Decay $L^\circ \to \mu + \pi$ for $m_{L^\circ} = 1.5$ GeV/$c^2$ as a Function of x and $P_T$ . 81
12. Production of $L^\circ$ and $\bar{L}^\circ$ from the Decay of $\tau^-$ and $\tau^+$ Leptons Created by the Drell-Yan Mechanism . . . . . 87

# CHAPTER I

## INTRODUCTION

It has become evident during the last several years that there may exist other members of the lepton family besides the electron, the muon, their individual neutrinos, and all of their anti-particles. In electron-position annihilations, a substantial amount of data has been amassed which indicates the probable existence of a heavy charged lepton $\tau$ as well as an associated neutral particle. This exciting discovery raises a number of tantalizing questions: how many more leptons exist and what are the relationships among them? Unfortunately, it is not known yet what group structure incorporates the lepton family. If it were known, it might be possible to predict the numbers, types, and properties of the leptons, just as the SU(6) quark model has been used to predict those same items for the hadrons. Clearly, experimental searches for additional leptons will be helpful in answering such questions. The feeling that there exist more leptons to be discovered has also been fostered by the spectacular rise of renormalizable gauge theories of weak and electromagnetic interactions. In many of these theories, the existence of heavy leptons is required to fill the fundamental representation of the gauge group and to preserve the unitarity and renormalizability of the theory. Clearly, searches for additional leptons will be helpful in guiding the development of these theories and in testing them. Therefore, it is important to conduct such experiments. This dissertation will describe an experimental search for neutral heavy leptons, or $L^{\circ}$'s [ 1 ].

The experimental and theoretical motivations to search for additional leptons will be discussed in greater detail in Chapter II. The predicted modes by which neutral heavy leptons may be produced and observed to decay will be presented. This will be followed by a summary of recent experimental searches for heavy leptons.

In Chapter III, the design of the present experiment will be given. The equipment used in the search will be described, as well as its calibration and the data-taking.

The procedures used in the preliminary analysis of the data will be presented in Chapter IV. This will be followed by a close examination and interpretation of the events which were detected. All events will be shown to be inconsistent with the interpretation that they result from the decays of neutral heavy leptons.

The acceptance of the apparatus for detecting $L^{\circ}$ decays will be calculated in Chapter V. This will be followed by the calculation used to set a model-independent upper limit on the production cross-section and decay branching ratio of $L^{\circ}$'s.

In Chapter VI, the yields of neutral heavy leptons due to various production processes will be calculated and compared with the experimental result.

Finally, in Chapter VII, the experimental results will be summarized along with their significance.

# CHAPTER II

# HEAVY LEPTONS: THEORY AND EXPERIMENT

## A. Motivations to Search for Heavy Leptons

The importance of searching for new members of the lepton family has been made clear by recent developments on the experimental and theoretical frontiers of elementary particle physics. One of these developments is the probable discovery of a heavy charged lepton $\tau$ and an associated neutral companion in electron-positron annihilations. It is well-known that there are no compelling arguments against the existence of other leptons besides e, $\nu_e$, $\mu$, and $\nu_\mu$ [ 2 ]. The discovery of the $\tau$ serves to remind us that the existence of additional leptons might not be sheer fantasy, but may, in fact, be a reality.

The other development is the formulation of unified renormalizable gauge theories of weak and electromagnetic interactions which can successfully account for the various observed properties of charged and neutral current interactions of neutrinos and electrons. Depending on the specific choice of the gauge group, a particular theory may require the existence of additional leptons. Unfortunately, the unique gauge group of weak and electromagnetic interactions has not been determined yet, because there are not enough experimental and theoretical constraints to limit the large number of possible gauge groups. Clearly, searches for additional leptons would help to furnish such constraints.

The rest of the discussion in this sub-chapter will be devoted to making the above statements more concrete.

It is only natural that the existence and the properties of the electron and the muon would lead to speculation about the existence of heavier charged leptons. First, there are no strong theoretical arguments why the existence of the muon and the electron precludes that of heavier leptons [ 2 ]. A second motivation for heavy leptons is provided by the consideration of the similarities and differences between the muon and the electron. Both are charged spin 1/2 point-like particles which obey the Dirac equation. Each undergoes electromagnetic interactions with the same strength and weak interactions with an identical coupling strength. Finally, neither participates in strong interactions. Taken together, these shared properties stand for the concept of muon-electron universality. Of the few differences between the muon and the electron, one can cite their masses $m_e(m_\mu) = 0.5110034 \pm 0.0000014$ MeV/$c^2$ ($105.65946 \pm 0.00024$ MeV/$c^2$) [ 3 ] and the fact that each is associated with a different neutrino. Although the muon and electron may be connected in some profound and obscure relationship, on the basis of the above properties, they may be interpreted as similar but unrelated particles which just happen to satisfy the Dirac equation [ 2 ]. In this same spirit, one can imagine the existence of pairs of heavy charged leptons and their neutrinos ($L^-$, $\nu_L$), ($L'^-$, $\nu_{L'}$), etc. which also have no relationship with each other or with ($e^-$, $\nu_e$) or ($\mu^-$, $\nu_\mu$). In a different approach, one can imagine the existence of positively-charged (negatively-charged) heavy leptons which carry the same quantum number as the electron or muon. The latter class of particles is named paraleptons (ortholeptons) whereas the former is named sequential leptons. These classes will be described in greater detail in Chapter II-B.

It is also only natural that the existence of the electron and muon neutrinos would lead to speculation about the existence of other neutral leptons. As in the case of the charged leptons, this speculation runs in several different directions [ 2 ]. I have already mentioned the case of sequential leptons: $(L^-, \nu_L)$, $(L'^-, \nu_{L'})$, etc. Instead, one can imagine that the neutral leptons associated with heavy charged leptons also have mass: $(L^-, L^\circ)$, $(L'^-, L'^\circ)$, etc. In a different approaceh, one can imagine the existence of neutral heavy leptons $E^\circ$ $(M^\circ)$ which possess the same lepton number as the electron (muon). As with the charged leptons, there are no known reasons why there should be only two neutral leptons in nature, namely $\nu_e$ and $\nu_\mu$ [2 ]. Therefore, the existence of additional neutral leptons cannot be ruled out.

On the other hand, there are a number of theoretical arguments which use astronomical observations to place constraints on the numbers, lifetimes and masses of such particles. Nonetheless, these arguments are not able to rule out the existence of many types of neutral leptons. Steigman, Schramm, and Gunn [ 4 ] have shown that the existence of more than 7 kinds of massless neutrinos in the hot early stages of a big bang cosmology would lead to a $He^4$ abundance in the universe which disagrees with observations. Cowsik and McClelland [ 5 ] have demonstrated that if the sum of the masses of all types of stable neutrinos exceeds 40 $eV/c^2$, the energy density contributed by these particles would produce a deceleration of the expansion rate of the universe which is in disagreement with the observed value. Finally, Lee and Weinberg [ 6 ] show that stable neutral

heavy leptons will not slow the expansion rate down as long as their mass exceeds 2 GeV/$c^2$, because they would then have a significantly lower number density than ordinary neutrinos. These arguments clearly do not rule out the existence of neutral heavy leptons of mass $\lesssim$ 2 GeV/$c^2$ which decay with lifetimes less than $10^{-6}$ seconds. Such particles are the primary subject of this experiment.

That the existence of additional leptons is not a subject for idle speculation has been demonstrated by the discovery of the $\tau$. Since 1975, a substantial amount of data has been collected in many experiments at SPEAR and DESY which supports the interpretation that the anomalous events $e^+ + e^- \rightarrow e^\pm + \mu^\mp$ + (nothing else) are due to the electromagnetic pair production and the weak decay of heavy leptons $\tau^+$ and $\tau^-$ [7]. The final state particles are believed to arise from $e^+ + e^- \rightarrow \tau^+ + \tau^-$, $\tau^+ \rightarrow \overline{L}^\circ + e^+ + \nu_e$, and $\tau^- \rightarrow L^\circ + \mu^- + \overline{\nu_\mu}$. (Here, I use the designation $L^\circ$ instead of the more commonly-assumed $\nu_\tau$ because this particle might qualify for a neutral heavy lepton [8].) The cross-section for producing these anomalous events has the same magnitude and energy-dependence as that predicted by the theory of quantum electrodynamics (QED) for the pair creation of point-like spin 1/2 particles of mass $\sim$ 1.8 GeV/$c^2$ [9]. Since these are the same properties that one would have expected on the basis of muon-electron universality, this measurement supports the idea that $\tau$ is a lepton and not a hadron. Further evidence comes from two experiments which independently rule out the explanation of the events as being due to the pair production of charmed pseudoscalar mesons $D^+D^-$ followed by $D^+ \rightarrow K^\circ + e^+ + \nu_e$ and $D^- \rightarrow \overline{K}^\circ + \mu^- + \overline{\nu}_\mu$. By fitting the cross-section for the electromagnetic pair production of $\tau^+\tau^-$ leptons to that measured from the observation of $e\mu$

events, they determine $m_\tau = 1782 \,^{+2}_{-7}$ MeV/$c^2$ [ 9 ] and 1807 ± 20 MeV/$c^2$ [10 ], which precludes any association with the $D^\pm$, whose mass is 1868.3± 0.9 MeV/$c^2$ [ 3 ]. Additional support to the heavy lepton interpretation comes from examinations of the decay particles in the final states. The average branching ratio for the decay modes $\tau^- \to L^\circ + e^- + \bar{\nu}_e$ and $\tau^- \to L^\circ + \mu^- + \bar{\nu}_\mu$ is 0.182 ± 0.028 [10 ] which is, within the errors, in good agreement with the prediction of 20% for a heavy charged lepton of mass 1.8 GeV/$c^2$ [11 ]. The observation of events where $e^+ + e^- \to e^\pm(\mu^\pm) + X^\mp + \geq 0$ photons lends further support to the scheme since these events can be explained by $e^+ + e^- \to \tau^+ + \tau^-$, followed by $\tau^+ \to \bar{L}^\circ + e^+(\mu^+) + \nu_e(\nu_\mu)$ and $\tau^- \to L^\circ + X^- +$ neutral particles, X = charged hadron [ 7 ]. Finally, the structure of the coupling between the $\tau$ and its associated neutral particle can be studied using the momentum distribution of the leptons in the $e\mu$ events. A charged current coupling which is V + A as compared to V − A predicts smaller average values for the electron and muon momenta as well as smaller probabilities that the electrons and muons will have momenta near the maximum possible [12 ]. Assuming $m_{L^\circ} = 0.0$, the $\chi^2$ probability for a V − A charged current coupling is 60%, whereas that for V + A is 5% or 0.1% depending on the data sample [13]. If additional data indicate a pure V − A coupling, this will be another similarity between the $\tau$ and the lighter leptons: they participate in weak interactions via pure V − A charged currents of the form $\bar{\psi}_{L^\circ} \gamma^\alpha (1 - \gamma_5) \psi_\tau$, $\bar{\psi}_{\nu_\mu} \gamma^\alpha (1 - \gamma_5) \psi_\mu$, and $\bar{\psi}_{\nu_e} \gamma^\alpha (1 - \gamma_5) \psi_e$.

Additional motivation to search for heavy leptons is supplied by unified renormalizable gauge theories of weak and electromagnetic interactions. In many of these models, the existence of additional leptons is required to cancel "triangle anomalies" [ 14] and by so doing, to preserve the unitarity and renormalizability of the theory. Their existence may also be required to fill the fundamental representation of the gauge group. To make the above points plausible, I must describe at least one gauge theory in some detail. In addition, some recent experimental data must be mentioned. This is necessary to make it plausible to say that if certain gauge theories require the existence of additional leptons, this prediction cannot be taken lightly.

The $SU(2)_L \otimes U(1)$ gauge theory proposed by Weinberg and Salam [15 ] is one of many theories which demonstrate that the vector boson field known as the photon A, which mediates electromagnetic interactions, can be united with the vector bosons $W^{\pm}$, which mediate weak interactions. Their theory as well as more recent models calls for the existence of a number of new particles, in particular, a vector boson $Z^{\circ}$ which mediates interactions between currents of particles in which the charge does not change -- the so-called neutral current interactions. One of the first indications that such theories might provide the correct theoretical description of particle interactions was the observation of the neutral current interactions $\nu_{\mu} + N \rightarrow \nu_{\mu}$ + hadrons, where N is a nucleon [16 ]. This occurs via the exchange of a $Z^{\circ}$ between the neutrino current and a current of quarks inside the nucleon.

One of the most attractive features of these theories is their ability to explain the observed dissimilarities between the weak and electromagnetic interactions as the result of a spontaneous breakdown of gauge symmetry. In the "minimal" model of Weinberg-Salam, the electron and its neutrino are grouped into a left-handed multiplet L and a right-handed singlet R [17]: $L \equiv [1/2\ (1 - \gamma_5)] \binom{\nu_e}{e}$ , $R \equiv [1/2\ (1 - \gamma_5)]e$. The Lagrangian is constructed so as to obey an exact gauge symmetry : in this case, the kinetic terms $-\bar{L}\gamma^\mu \partial_\mu L - \bar{R}\gamma^\mu \partial_\mu R$ are left invariant by the group $SU(2)_L$ which performs isospin transformations on the doublet and by the group U(1) which performs unitary transformations on L and R. The Lagrangian is constructed out of fields which are all massless: in addition to L and R, there is an isotriplet gauge field $\vec{A}_\mu$ which couples to L with strength g via the isospin generators, an isosinglet gauge field $B_\mu$ which couples to L and R with strength 1/2 g' via the U(1) generator, and a doublet of complex scalar fields. Due to a spontaneous symmetry breaking of the vacuum, masses are generated for the charged leptons, for the scalar fields, and for some of the other fields. The four gauge fields $\vec{A}_\mu$ and $B_\mu$ form linear combinations corresponding to four physical vector particles: $W^+$ and $W^-$ of equal and large mass, a neutral boson $Z^\circ$ which is even heavier than the $W^\pm$, and a neutral field A, which has not acquired mass because of electromagnetic gauge invariance and can therefore be identified with the photon. The beautiful feature of this model is that the masses of $W^\pm$ and $Z^\circ$ as well the electromagnetic coupling strength e and the Fermi coupling constant G of weak interactions are all related through the parameters

g and g'. In fact, $m_{W^\pm} \sim (38/\sin\theta_W)$ GeV/$c^2$ and $m_{Z^\circ} \sim (76/\sin 2\theta_W)$ GeV/$c^2$ where $g'/g = \tan\theta_W$ [17].

Besides the prediction of Z°, what other evidence exists that gauge theories and in particular, the Weinberg-Salam theory, have relevance to the physical world? In other words, why should we lend an ear to particular gauge theories if they require the existence of additional members of the lepton family? One recent experiment has measured the difference in how strongly left- and right-handed electrons $e_L$ and $e_R$, respectively, scatter off deuterium nuclei at ∿ 20 GeV/c [ 18 ]. In the Weinberg-Salam theory and many others, this neutral current process occurs via the exchange of either a photon or a Z°. However, because the photon couples with equal strength to $e_L$ and $e_R$ whereas the Z° couples to $e_L$ with a strength different from that with which it couples to $e_R$ [ 19 ], one would expect an asymmetry to be observed. The constructive interference between the photon and Z° exchanges is predicted to yield a larger cross-section for $e_L$ scattering than for $e_R$ scattering. This effect was observed, in fact, with a difference of 1 part in 5000 and an uncertainty of 1 part in 50,000. The magnitude of this parity violation was found to be in good agreement with that predicted by the Weinberg-Salam theory when values for $\sin^2\theta_W$ are used from neutrino experiments. (M. Holder et al [20 ] determined $\sin^2\theta_W = 0.24 \pm 0.02$ from a measurement of the ratio of neutral current to charged current neutrino interactions: $(\nu(\bar{\nu}) + N \rightarrow \nu(\bar{\nu}) + \text{hadrons})/(\nu(\bar{\nu}) + N \rightarrow \mu^- (\mu^+) + \text{hadrons})$.) Earlier attempts to measure this predicted parity violation in atomic physics experiments yielded results which conflicted with each other [21 ]. Two recent neutrino experiments have determined $\sin^2\theta_W$ to be $0.20 \begin{smallmatrix}+0.16\\-0.08\end{smallmatrix}$ from

$\nu_\mu + e^- \rightarrow \nu_\mu + e^-$ [22] and 0.35 ± 0.08 from $\nu_\mu(\bar{\nu}_\mu) + e^- \rightarrow \nu_\mu(\bar{\nu}_\mu) + e^-$ [23]. These are key experiments for testing gauge theories because the theory can be compared to experimental results without the uncertainties introduced by using hadronic targets. These reactions occur only via the exchange of a $Z^\circ$ between the muon neutrino current and the electron current in contrast to $\bar{\nu}_e + e^-$ elastic scattering which also occurs via the production of a virtual $W^-$. Both experiments claim good agreement with the Weinberg-Salam theory, in contrast to an earlier experiment [24] which reported a significantly higher value of $\sin^2\theta_W$ for the same process. This is convincing evidence that particular types of gauge theories may provide a correct understanding of nature. Although the minimal Weinberg-Salam model does not require the existence of additional leptons, there is a large number of models based on other possible gauge groups which need such leptons and which are also in agreement with the present experimental data. Unfortunately, not enough experimental and theoretical constraints are known to limit this number.

Some gauge theories require the existence of additional leptons to preserve the unitarity and renormalizability of the theory. In contrast to the earlier unsuccessful $W^\pm$ intermediate vector boson theories, Weinberg [25] demonstrated that the SU(2) ⊗ U(1) unified gauge theory preserved unitarity to first order. However, Gross and Jackiw [26] and, independently, Bouchiat, Iliopoulous, and Meyer [27] showed that this theory lacked renormalizability. Moreover, the presence of Adler-Bell-Jackiw "triangle anomalies" [26] in higher orders of calculation was found to throw the unitarity of the theory into jeopardy as well. These anomalies arise in

Feynman diagrams where any three of the vector gauge bosons in the theory interact through a triangle of fermion fields. In particular, those terms in which two of the three vertices involve vector couplings and the other an axial-vector coupling were found to be singular and impossible to remove from the original $SU(2)_L \otimes U(1)$ theory. Since it must be possible to calculate to higher orders for a theory to be self-consistent, this was a serious flaw, but not one without a solution. Both groups of theorists demonstrated that if the fermion content of the theory were expanded, the anomaly created by one kind of fermion could be cancelled by that caused by another kind of fermion. The cancellation is possible only because the anomaly is odd in the sign of the axial-vector coupling. Thus, for every right-handed (left-handed) fermion, one could introduce a corresponding left-handed (right-handed) fermion with identical coupling strengths to the vector gauge fields[28]. Moreover, no constraints are imposed on the masses of these new fermions because the triangle anomaly is independent of the mass of the fermions involved. Therefore, two general techniques can be used to rescue theories in which triangle anomalies threaten destruction: 1) introduce more leptons into the theory to cancel the anomalies of the already present leptons; 2) introduce the Fermi-Dirac quarks of which hadrons are constructed and have them cancel the anomalies created by the leptons.

Let me mention several unified renormalizable gauge theories of weak and electromagnetic interactions which introduce additional leptons to preserve their unitarity and renormalizability. As an instructive example, consider a model containing W, A, $Z^\circ$, a doublet of complex scalar fields, the left-handed doublet $\binom{\nu_e}{e^-}_L$, the right-handed doublet $\binom{E^\circ}{e^-}_R$, and the

singlet $E^{\circ}_{L}$. Clearly, the triangle anomalies of $\nu_{e_L}$ are cancelled by those of $E^{\circ}{}_{R}$, and the anomalies of $e^{-}{}_{L}$ by those of $e^{-}_{R}$ [ 29]. A less obvious model is the SU(3) ⊗ U(1) gauge theory of Lee and Schrock [30 ] where a number of neutral and charged heavy leptons have been introduced. The theory groups the leptons into three families: the e family consists of the singlet $E^{\circ}{}_{L}$ and the triplets $(\nu_e, e^-, E^{-\prime})_L$ and $(E^{\circ\prime}, E^{-\prime}, e^-)_R$; the μ family consists of the singlet $M^{\circ}{}_{L}$ and the triplets $(\nu_\mu, \mu^-, M^{-\prime})_L$ and $(M^{\circ\prime}, M^{-\prime}, \mu^-)_R$; and the τ family consists of the singlet $T^{\circ}{}_{L}$ and the triplets $(\nu_\tau, \tau^-, T^{-\prime})_L$ and $(T^{\circ\prime}, T^{-\prime}, \tau^-)_R$. The theory also introduces a number of new quarks too, but the anomalies of the leptons and the quarks cancel separately among themselves [ 31]. This model is also a good example of a gauge theory which requires the addition of new leptons ( and also new quarks) to fill the fundamental representation of the gauge group. This model not only predicts parity violation in neutral current interactions, the observation of which was mentioned earlier, but it also incorporates $\tau^-$ and its neutral companion as well as a new quark for which evidence has been recently obtained in the observations of $p + N \rightarrow T(9.46$ $GeV/c^2)$, $T'(10.2\ GeV/c^2)$ ... [ 32 ] and $e^+ + e^- \rightarrow T$ [ 33 ]. Because the model also has features such as the incorporation of the charmed quark, the suppression of strangeness-changing neutral currents, and the suppression of μ- and e-type lepton-number-nonconserving processes such as $\mu \rightarrow e + \gamma$, it may be considered to be a strong candidate for the unique gauge group of weak and electromagnetic interactions.

The second method of achieving unitarity and renormalizability in some gauge theories - namely the cancellation of the anomalies of the leptons with those of the quarks - suggests a concept of "lepton-quark symmetry"

[34]. Consequently, the discovery of a new quark would imply the existence of a new lepton, and vice versa. Perhaps the existence of the leptons e, $\nu_e$, $\mu$, and $\nu_\mu$ and the quarks p, n, and $\lambda$ necessitated the existence of the charmed quark c [35]. Similarly, perhaps the existence of a new quark implied by the T discovery calls for the existence of the heavy lepton $\tau$, and $\tau$'s neutral companion calls for still yet another quark. If the proliferation of quarks continues, then particular classes of gauge theories will be calling for the existence of many more as yet undetected leptons [36].

In summary, I have pointed out that the existence of additional members of the lepton family cannot be ruled out and, in fact, there is already substantial evidence for a new heavy charged lepton $\tau$ as well as a neutral companion. Furthermore, I have pointed out that unified renormalizable gauge theories of weak and electromagnetic interactions often require the existence of additional leptons. These are certainly very compelling reasons to search for such particles.

B. Production of Various Types of $L^\circ$'s

Three primary schemes have been proposed for incorporating additional particles into the lepton family: sequential leptons, paraleptons, and ortholeptons [ 2 ]. For clarity's sake, the particles in these different classes will have distinct designations. In particular, neutral heavy leptons of electron-type and muon-type have been proposed with designations $E^\circ$ and $M^\circ$. These labels will be used below consistently. The designation $L^\circ$ will be employed shortly for neutral heavy leptons that are sequential. In the rest of this document, however, the label $L^\circ$ will refer to all types of neutral heavy lepton, whether they are electron-type, muon-type, or sequential. Although the neutral particle associated with the $\tau$ lepton will be designated $L^\circ$, this same label will be used as well in reference to the neutral partners of other charged leptons.

A lepton $L^-$ is classified as sequential if it has an associated neutral particle $L^\circ$ and both particles have a lepton number which is unique and completely conserved. Such leptons fit into the sequence $(e^-, \nu_e)$, $(\mu^-, \nu_\mu)$, $(L^-, L^\circ)$..... where the designation $L^\circ$ is chosen instead of $\nu_L$ because the associated neutral particle might not be massless. Since the individual lepton numbers are conserved, L's can arise or decay only in pairs and the decays are mediated solely by the weak interactions. As a result, $L^\circ$'s can be produced only in such processes as $L^- \rightarrow L^\circ + X^-$ where $X^- = (e^- + \bar{\nu}_e)$, $(\mu^- + \bar{\nu}_\mu)$, hadron$^-$, or (hadron continuum)$^-$ and where $m_{L^\circ} < m_{L^-}$ has been assumed; in the semileptonic decays of heavy hadrons as in (heavy hadron)$^+ \rightarrow$ (neutral

hadron) + $L^+ + L^\circ$, etc; $L'^+ \to L'^\circ + L^+ + L^\circ$, etc; $\nu_\mu + (Z,A) \to \mu^- +$ $(Z,A) + L^+ + L^\circ$ via the Bethe-Heitler process [37 ]; or in $e^+ + e^- \to$ $L^\circ + \bar{L}^\circ$. If the $L^\circ$ is heavier than $L^-$, then it will be expected to decay rapidly into $L^-$, which will then be absolutely stable. If the $L^\circ$ is lighter than $L^-$, then even though it may be massive, it will be absolutely stable.

(On the other hand, recent work on renormalizable gauge theories of weak and electromagnetic interactions suggests, conservation of muon and electron number might not be a fundamental symmetry law of nature [38 ]. Decays such as $\mu \to e + \gamma$ would not be forbidden but would be highly suppressed by the coupling constants of the theory. Similarly, even for a neutral heavy lepton which is the lightest member of its sequential family, its decay into leptons of a different family might not be absolutely forbidden. The decay rate, however, would be highly suppressed, suggesting a long lifetime.)

A positively-charged lepton is classified as a paralepton $E^+$ ($M^+$) if it has electron (muon) number +1. In this way, electromagnetic decays of these particles into $e^+$ ($\mu^+$) are forbidden and only the weak decays are allowed. Such particles are not necessarily associated with other neutral particles $E^\circ$ ($M^\circ$) in addition to $\nu_e(\nu_\mu)$. However, if such neutral heavy leptons do exist, they may be produced in processes analogous to those given above for $L^\circ$'s and in events such as $e^-(\mu^-)$ + proton $\to E^\circ$ ($M^\circ$) + nucleon, $e^+ + e^- \to \bar{\nu}_e$ ($\bar{\nu}_\mu$) + $E^\circ(M^\circ)$, and $e^+ + e^- \to$ $\bar{E}^\circ(\bar{M}^\circ) + E^\circ(M^\circ)$. Furthermore, assuming that $m_{E^\circ(M^\circ)} < m_{E^+(M^+)}$, these particles may decay via $E^\circ(M^\circ) \to e^-$ ($\mu^-$) + $X^+$.

Finally, a negatively-charged lepton is classified as an ortho-lepton $e^{*-}(\mu^{*-})$, or "excited" electron (muon), if it has electron (muon) number +1. The electromagnetic process $e^{*-}(\mu^{*-}) \rightarrow e^{-}(\mu^{-}) + \gamma$ is now allowed and is expected to be the primary decay mode unless it can be suppressed. Low [39] has proposed a coupling between the electron and its excited brother which is magnetic as in the Lagrangian $e(\lambda/m_e{}^*)\bar{\psi}_{e*}\sigma^{\mu\nu}\psi_e F_{\mu\nu}$. Here, $F_{\mu\nu}$ is the electromagnetic field-strength tensor. If $\lambda$ is very small or if $m_e{}^* >> m_e$, then experimental disagreement with QED predictions may be avoided and the weak decays of $e^*$ will dominate. As is the case with paraleptons, ortholeptons are not necessarily associated with other neutral particles $E^\circ(M^\circ)$ in addition to $\nu_e(\nu_\mu)$. However, if such neutral heavy leptons do exist in the ortho-lepton scheme, they may be produced in the very same processes described above for the paralepton scheme. Moreover, these $E^\circ$'s ($M^\circ$'s) will be allowed to decay via weak interactions.

C. Decays of $L^\circ$'s

Tsai [ 11 ] has considered the decay via weak interactions of a charged lepton $L^-$ which is coupled at full strength $G = 1.02 \times 10^{-5} m_p^{-2}$ to a massless neutrino $\nu_L$ by a V-A charged current. Bjorken and Llewellyn Smith [ 40 ] have calculated the decays of a paralepton $E^+$ which is V±A coupled to an associated neutral particle of arbitrary mass. The latter authors say that their calculations of $E^+ \to E^\circ + X^+$ where $m_{E^\circ} = 0$ also describe the decays $E^\circ \to e^- + X^+$ where $m_{E^\circ} \neq 0$ and where $E^\circ$ has a V±A charged current coupling to $e^-$. Therefore, if one replaces the $L^-$ of Tsai's work with $E^\circ$, his conveniently-tabulated results for the rates of various decay channels will describe the processes $E^\circ \to e^- + X^+$ where $E^\circ$ and $e^-$ are V-A coupled and the mass of the electron is assumed to be negligible with respect to $m_{E^\circ}$. In Table 1, I have replaced the partial decay rates calculated by Tsai with branching ratios. These same branching ratios will describe the decays $M^\circ \to \mu^- + X^+$ for $m_{M^\circ} \gg m_\mu$.

It is evident that the observation of a peaking of invariant masses in $e^\pm(\mu^\pm) + \pi^\mp$ events would be a compelling signal for a neutral heavy lepton of mass $\lesssim 2$ GeV/$c^2$. For masses above 1 GeV/$c^2$, $E^\circ \to e^- + \rho^+, K^+$, and $A_1$, would provide clear signals as well. The observation of the $e^+$ and $e^-$ in $E^\circ \to e^- + \nu_e + e^+$ or the observation of the $e^-$ and $\mu^+$ in $E^\circ \to e^- + \nu_\mu + \mu^+$ could also furnish supporting evidence for a neutral heavy lepton. For such events, the ratio of the average momentum $P_-$ of the negative particle to that of the positive particle $P_+$ has been calculated by a number of authors [ 41 ]. This ratio will depend on the nature

TABLE 1

Branching Ratios for Electron-like Neutral Heavy Leptons $E^\circ$

| $m_{E^\circ}$ (GeV/$c^2$) | 0.6 | 0.8 | 0.938 | 1.2 | 1.8 | 3.0 |
|---|---|---|---|---|---|---|
| decay mode | | | | | | |
| $E^\circ \to e^- + \nu_e + e^+$ | 18 | 23 | 19 | 18 | 20 | 24 |
| $e^- + \nu_\mu + \mu^+$ | 13 | 19 | 17 | 17 | 20 | 24 |
| $e^- + \pi^+$ | 68 | 52 | 32 | 19 | 9 | 4 |
| $e^- + K^+$ | 0.6 | 2 | 2 | 1 | 0.7 | 0.3 |
| $e^- + \rho^+$ | 0 | 4 | 29 | 41 | 30 | 14 |
| $e^- + K^{*+}$ | 0 | 0 | 0.2 | 2 | 2 | 1 |
| $e^- + A_1$ | 0 | 0 | 0 | 1 | 10 | 11 |
| $e^- + Q$ | 0 | 0 | 0 | 0 | 0.05 | 4 |
| $e^-$ + hadronic continuum | 0 | 0 | 0 | 1 | 8 | 21 |
| $E^\circ \to e^-$ + hadrons | 69 | 58 | 64 | 64 | 60 | 52 |
| $\tau_{E^\circ}$ (sec) | $6.7 \times 10^{-11}$ | $2.0 \times 10^{-11}$ | $7.8 \times 10^{-12}$ | $2.2 \times 10^{-12}$ | $3.1 \times 10^{-13}$ | $2.9 \times 10^{-14}$ |

of the coupling as well as the polarization and velocity distribution of the neutral heavy leptons. Without assuming any specific knowledge of these three items, a full generality bound has been established which requires $0.48 \leq \langle P_- \rangle / \langle P_+ \rangle \leq 2.10$ for the decays of neutral heavy leptons [42].

The lifetime $\tau$ of the neutral heavy lepton is given as a function of mass in Table 1. It can also be expressed approximately as [43] $\tau_{E^\circ} \sim (\tau_\mu/5)(m_\mu/m_{E^\circ})^5 \sim 4 \times 10^{-12}\ m_{E^\circ}^{-5}$ seconds where $m_{E^\circ}$ is given in GeV/$c^2$. Naturally, if the nature or strength of the coupling of neutral heavy leptons to other particles is significantly different from that provided by V-A currents at full strength G, the lifetimes of such neutral heavy leptons may be quite different.

Table 1, of course, refers only to the decays of an electron-type neutral heavy lepton $E^\circ$. The decays of an $M^\circ$ will be analogous, with $e^-$ being replaced by the $\mu^-$. If neutral heavy leptons of the sequential type exist, one would not expect them to decay unless their new lepton quantum number is not strictly conserved. In this circumstance, their decay modes and lifetimes will depend sensitively on their couplings to the other leptons.

## D. Searches for Heavy Leptons in $e^+e^-$ Annihilations

As illustrated above, neutral heavy leptons may be produced in the decays of charged companions. For that reason, the evidence for both charged and neutral heavy leptons will be reviewed.

The strong evidence for the existence of the charged lepton $\tau$ has already been presented. The data rules out the possibility that $\tau$ is an $e^-$ related paralepton since $\sigma(\tau^+ \to \nu_e + e^+ + \nu_e)/\sigma(\tau^+ \to \nu_e + \mu^+ + \nu_\mu)$ is not 2 as theoretically predicted but $0.92 \pm 0.32$ [10]. The prediction of 2 comes about because there is constructive interference of the two diagrams which give the $e^+$ decay mode [44]. This measurement also rules out the possibility that $\tau$ is a $\mu^-$ - related paralepton since this assignment leads to the prediction $\sigma(\tau^+ \to \nu_\mu + \mu^+ + \nu_\mu)/\sigma(\tau^+ \to \nu_\mu + e^+ + \nu_e) = 2$. On the other hand the data is consistent with three assignments [45]: 1) $(\tau^-, L^o)$ are a pair of sequential leptons, 2) $\tau$ is a $\mu^-$ - related ortholepton $M^+$ whose coupling to $\nu_\mu$ is suppressed, or 3) $\tau$ is an $e^-$ - related ortholepton $e^{*-}$. For these last two cases, the radiative decays must be severely suppressed since they have not been observed: $(\sigma(\tau^- \to e^- + \gamma) + \sigma(\tau^- \to \mu^- + \gamma))/\sigma(\tau^- \to \text{all}) \lesssim 6.0\%$ at the 90% confidence level (CL) [45].

Limits on the mass and coupling strength of $e^{*-}$'s to electrons have been determined by Bacci et al [46] from measurements at Frascati of $e^+ + e^- \to e^+ + e^- + \gamma$. The process occurs in quantum electrodynamics (QED) when one of the initial (final) electrons gives rise to a photon before it departs from (arrives at) the mass shell and interacts with the other electron. On the other hand, if $e^{*-}$'s exist, photons also may be created at the vertex between the electron and a virtual $e^{*-}$. Since the measurements agree with QED predictions to a high degree, constraints on $e^{*-}$'s

may be established. Based on the theoretical model of Low[39 ]in which the $e^-$ and $e^{*-}$ are magnetically coupled at the photon vertex with a strengh equal to $\lambda e/m_{e*}$, the 95% confidence level upper limits on $\lambda^2$ are $3.5 \times 10^{-4}$ for $m_{e*} \leq 1.25$ GeV/$c^2$ and $1.5 \times 10^{-3}$ for $1.25 \leq m_{e*} \leq 2.3$ GeV/$c^2$. Thus, $\tau$ cannot be an orthoelectron $e^{*-}$ with $\lambda \cong 1$.

The neutral particle associated with the $\tau$ is a candidate for a neutral heavy lepton. From the momentum spectrum of e's in $\tau$ decay, a 90% CL limit $m_{L^o} \leq 0.74$ GeV/$c^2$ (0.54 GeV/$c^2$) has been established for $m_\tau = 1.8 \pm 0.03$ GeV/$c^2$ if the $\tau - L^o$ coupling is V - A (V + A)[10 ]. The more stringent result $m_{L^o} \leq 0.25$ GeV/$c^2$ has been recently obtained, but has not been published[47 ]. If this particle couples with the same strength as the $\nu_e(\nu_\mu)$ couples to the $e(\mu)$, then it should have been observed in $\pi^\pm$, $K^\pm \to e^\pm(\mu^\pm) + L^o$, where the monochromatic energy of the $e(\mu)$ would provide a clear signal. On the other hand, no evidence for heavy leptons, either charged or neutral, has been found in the study of the decay modes of the pion or kaon[ 2 ]. If this $L^o$ is nearly massless, i.e. $L^o = \nu_\tau$, and if it couples to $e(\mu)$ with the same strength as the $\nu_e(\nu_\mu)$, one might expect it to participate in $\pi^+$, $K^+ \to e^+ (\mu^+) + \nu_\tau$. In turn, this would "effectively" increase the observed rate of $\pi^+$, $K^+ \to e^+(\mu^+) + \nu_e(\nu_\mu)$ decays. Since the observed rates of these $K_{\ell 2}$ decays are in good agreement with theoretical predictions[48 ], it is unlikely that the neutral particle associated with the $\tau$ is an electron- or muon- related lepton unless its coupling to these particles is very weak [49].

The above conclusion lends further support to the idea that the $\tau$ and its companion comprise a doublet of sequential leptons ($\tau^-$, $L^o$). If this scheme is indeed correct and $\tau$-number is conserved in weak, elec-

tromagnetic and strong interactions, then the decay of the $L^\circ$ will be prohibited even if it is massive. The long lifetime of the $L^\circ$ associated with the $\tau$ is indicated by the fact that no $L^\circ$ decays have been reported in the final states of $\tau$'s created in $e^+e^-$ annihilations. On the other hand, neutral heavy leptons of lifetime longer than $\sim 10^{-9}$ seconds would have travelled outside the detectors and escaped observation in any of these experiments at SPEAR or at DESY. If we assume that the mass of the neutral lepton associated with the $\tau$ is 200 MeV/$c^2$ and adopt the equation presented in Chapter II-C, we find $\tau_{L^\circ} = 1.3 \times 10^{-8}$ seconds. Since this equation is more appropriate for neutral heavy leptons of electron- or muon-type, we would anticipate a lifetime for sequential leptons of this mass which is many orders of magnitude longer. Clearly, the production by $L^\circ$'s of $\tau$'s in bubble chambers would furnish evidence that the $L^\circ$ has a long lifetime and that it carries the same quantum number as $\tau$. However, no evidence for the production of $\tau$ in bubble chambers has been reported. The data on neutrino-production of heavy leptons will be reviewed shortly.

A search has been performed for the decays into $e(\mu) + \pi$ of other neutral leptons which arise in $\tau$ decay. In this experiment, Meyer et al [50 ] assumed that the particle associated with the $\tau$ was massless, but that a neutral heavy lepton of electron- or muon-type and less massive than $\tau$ existed. The mass of this particle would have to be $\gtrsim 0.5$ GeV/$c^2$ in order not to have been detected in $K^\pm \rightarrow E^\circ(M^\circ) + e^\pm(\mu^\pm)$. Thus $\tau \rightarrow \nu_\tau + E^\circ(M^\circ) + e(\mu)$ followed by $E^\circ(M^\circ) \rightarrow e(\mu) + \pi$ would be expected. Based on theoretical predictions of the branching ratios for these two

processes as a function of the mass of the neutral heavy lepton they set $m_{E^\circ(M^\circ)} > 1.2$ GeV/$c^2$ at the 90% CL.

No events have been reported for the weak processes $e^+ + e^- \rightarrow \nu + \bar{L}^\circ$ ($\bar{\nu} + L^\circ$) or $e^+ + e^- \rightarrow L^\circ + \bar{L}^\circ$ where the $L^\circ$ subsequently decays. The first reaction occurs via the exchange of the intermediate vector boson $W^\pm$, while the second may occur through this channel as well as through a neutral current interaction intermediated by $Z^\circ$. Unfortunately, the cross-sections of these processes vary as $\sim 10^{-38}$ cm$^2$ X S (GeV$^{-2}$) and $\sim 4 \times 10^{-40}$ cm$^2$ X S (GeV$^{-2}$), respectively, and are beneath the sensitivity of the $e^+e^-$ machines at SPEAR and DORIS [51 ]. Searches for such reactions will be feasible only in the higher energy $e^+e^-$ colliding beam machines PEP and PETRA, where event rates as much as $\sim$ 100/day may be possible.

Both charged and neutral heavy leptons may appear in the purely leptonic decays of charmed pseudoscalar mesons created in $e^+e^-$ annihilation. Analogous to $K^+$, $\pi^+ \rightarrow \mu^+ + \nu_\mu$, there may be $D^+$, $F^+ \rightarrow L^+ + \nu_L$, $L^+ + L^\circ$, or $\mu^+(e^+) + M^\circ$ ($E^\circ$). Relative to these decays, such channels as $D^+$, $F^+ \rightarrow \mu^+$ ($e^+$) + $\nu_\mu$ ($\nu_e$) will be strongly supressed for the same reason that $\pi^+ \rightarrow e^+ + \nu_e$ is only $1.2 \times 10^{-4}$ the rate of $\pi^+ \rightarrow \mu^+ + \nu_\mu$. These last two processes occur only because the electron and the muon have mass: if they were massless, the V-A structure of the current would project them into eigenstates of negative helicity. Consequently, the decay would be forbidden by conservation of angular momentum since the neutrino has negative helicity but the $\pi$ has spin 0. However, because the electron and muon are not in helicity eigenstates but have

a component of positive helicity with amplitude proportional to $m_e$ and $m_\mu$ respectively, the decays are allowed to occur and the relative rates are explained. Analogously, in the purely leptonic 2-body decays of $D^+$ and $F^+$ mesons, those channels involving heavy leptons will dominate over channels involving the lighter leptons. The $F^+(F^-)$ mesons, which are composed of c and $\bar{\lambda}(\bar{c}$ and $\lambda)$ quarks [52 ], have been observed to have a mass of $2.03 \pm 0.06$ GeV/$c^2$ and to decay into $\eta + \pi^\pm$ [53 ]. The $D^+$ $(D^-)$ mesons, which are composed of c and $\bar{n}$ $(\bar{c}$ and n) quarks [52 ], have been observed to decay into $K^- + \pi^+ + \pi^+$ and $K^\circ + \pi^+$ and to have an invariant mass of $1.8683 \pm 0.0009$ GeV/$c^2$ [ 3 ].

Karliner [54 ] has calculated the decay widths of $F^+$ and $D^+$ mesons into heavy leptons $L^+$ and $L^\circ$. If we assume $L^+ = \tau^+$, $m_\tau = 1.79$ GeV/$c^2$, and $m_{L^\circ} = 0$, then $\Gamma(D^+ \to L^+ + L^\circ)/\Gamma(D^+ \to \text{all}) \sim 0.007\%$ where it has been assumed that $\Gamma(D^+ \to \text{all}) \simeq 6 \times 10^{12}$ sec$^{-1}$ [55 ]. On the other hand, $\Gamma(F^+ \to L^+ + L^\circ)/\Gamma(F^+ \to \text{all}) \sim 0.9\%$ assuming $\Gamma(F^+ \to \text{all}) \cong \Gamma(D^+ \to \text{all})$ [55 ]. Here, $\Gamma(D^+ \to L^+ + L^\circ)/\Gamma(F^+ \to L^+ + L^\circ) \sim 8 \times 10^{-3}$ because the leptonic decays of the D meson are Cabbibo-suppressed and because the available phase space for this particular decay mode is very limited. If the neutral particle associated with the $\tau$ is a neutral heavy lepton, then its creation in $F^\pm$ decay will be greatly suppressed by the limited amount of phase space available. In any case, to be kinematically possible, the mass of this heavy lepton must be $\lesssim 240$ GeV/$c^2$. Another possibility is that $L^+ = e^+(\mu^+)$ and $L^\circ = E^\circ(M^\circ)$ where $m_{E^\circ(M^\circ)} \sim 1.6$ GeV/$c^2$. Such events as $\tau^+ \to \overline{L^\circ} + e^+(\mu^+) + E^\circ$ $(M^\circ)$ may have gone undetected since the phase space available for the 3-body decay is limited. Neglecting

$m_e$ ($m_\mu$), one finds $\Gamma(D^+ \to e^+(\mu^+) + E^\circ(M^\circ))/\Gamma(D^+ \to \text{all}) \sim 0.06\%$ and $\Gamma(F^+ \to e^+(\mu^+) + E^\circ(M^\circ))/\Gamma(F^+ \to \text{all}) \sim 1.8\%$. As yet, no evidence for heavy leptons in the decays of charmed pseudoscalar mesons has been reported.

If one interprets the recent discovery of the high-mass hadronic states $\Upsilon$ (9.45) and $\Upsilon'$ (10.2 GeV/$c^2$) [32,33] as evidence for the existence of a new quark, then one expects the existence of a new family of pseudoscalar mesons of mass $\sim$ 5 GeV/$c^2$. In analogy to the decays of the charmed mesons $D^\pm$ and $F^\pm$ one may expect these new mesons to decay leptonically as well. Because of their large mass, one might also expect the semileptonic decays to be a potential source of heavy leptons [30 ]. Searches for such decays will undoubtedly be performed at the Cornell University Electron Storage Ring (CESR).

E. Searches for Heavy Leptons in Neutrino Interactions

A search for "wrong-sign" muon events in neutrino interactions has been reported by Holder et al [ 56 ]. Such events could be due to $\nu_\mu + N \rightarrow M^+ +$ (anything) followed by the decay of the paramuon $M^+ \rightarrow \mu^+ + \nu_\mu + \nu_\mu$ where N is the nucleon target. "Wrong-sign" events could also be produced by a number of background processes of which the most severe is $\bar{\nu}_\mu + N \rightarrow \mu^+ +$ (anything). To reduce the background due to charged current (CC) $\bar{\nu}_\mu$ interactions, the magnets of the West Area Neutrino Beam at the CERN SPS were tuned to select 200 GeV/c positive $\pi$'s and K's, whose decays $\pi^+$ $(K^+) \rightarrow \mu^+ + \nu_\mu$ would yield a high purity $\nu_\mu$ beam. In spite of these precautions, $\bar{\nu}_\mu$'s produced before the charge-momentum filter were present in the beam. One event survived a requirement that the energy of the $\mu^+$ and the energy deposited in the calorimeter be > 50 GeV, but 5.5 background events were also expected to survive this cut. The upper limit quoted for $M^+$ production relative to $\mu^-$ is $1.6 \times 10^{-4}$ at the 90% CL. To set a mass limit on $M^+$'s, the experimenters assumed the production mechanism discussed by Bjorken and Llewellyn Smith [ 40 ]: namely, the process $\nu_\mu + N \rightarrow M^+ +$ anything is described by the same differential cross-section which describes the production of $\mu^-$ by neutrinos via a V-A CC interaction with the quarks inside a nucleon. Of course, the total cross-section for $M^+$ production is suppressed below that for $\mu^-$ production because there is less available phase space. Assuming that the $M^+$ couples to $\nu_\mu$ at the same strength as the $\mu^-$ and calculating with a Monte Carlo routine the production and decay of the $M^+$ as well as the detection of $\mu^+$, they determine the lower mass limit for $\mu$-like paraleptons at $m_{M^+} \geq 12$ GeV/$c^2$ at the 90% CL. This result

surpasses the limit $m_{M^+} \geq 8.4$ GeV/$c^2$ at the same confidence level set by Barish et al [ 57 ] in an earlier counter experiment which was performed in Fermilab's neutrino beam. The model-dependent results of this latter experiment can be used to show that if the $\tau$ is a muon-like paralepton and it couples to $\nu_\mu$ at a strength $\alpha G$ , then $\alpha^2 \leq 0.03$ at the 90% CL. In addition to the data presented earlier on the $\tau$, this is further evidence that the $\tau$ is not a paramuon.

Another neutrino experiment has been used to establish mass limits on muon-like paraleptons and ortholeptons. The search for $\nu_\mu + Ne \rightarrow M^+ + \ldots$, $M^+ \rightarrow \nu_\mu + e^+ + \nu_e$ and $\nu_\mu + Ne \rightarrow \mu^{*-} + \ldots$, $\mu^{*-} \rightarrow \nu_\mu + e^- + \nu_e$ was carried out by Cnops et al [ 58 ] in the 15' bubble chamber at Fermilab. Events in which a muon was seen in addition to an electron were not considered because these were believed to be due to the production and decay of charmed particles. The observed numbers of $e^-$ and $e^+$ events were consistent with that expected from $\nu_e$ and $\bar{\nu}_e$ contamination in the beam. After subtraction of the expected number of events from that observed and application of efficiency corrections, 90% CL upper limits of $3 \times 10^{-3}$ and $1 \times 10^{-3}$ were established for $\mu^{*-}$ and $M^+$ production, respectively, relative to CC $\nu_\mu$ interactions. Using the same model for producing $\mu^{*-}$ and $M^+$ as that discussed by Bjorken and Llewellyn Smith and employed by Holder et al and assuming that $\mu^{*-}$ and $M^+$ couple to $\nu_\mu$ at the same strength as $\mu^-$, they determined the limits $m_{\mu^{*-}} \geq 7.5$ GeV/$c^2$ and $m_{M^+} \geq 9$ GeV/$c^2$. In addition, this experiment determined a limit for the $\nu_\mu - \tau$ coupling of $\alpha^2 \leq 0.025$, also at the 90% CL. Once again, the data does not support an interpretation of the $\tau$ as a paramuon.

The lower limit on the mass of the orthomuon $\mu^{*-}$ has been extended to 10.3 GeV/$c^2$ at the 98% CL by the application of further theoretical arguments to the data of a neutrino counter detector experiment [ 59]. Asratyan and Kubantsev [ 60] assumed that the electromagnetic decays of this particle were severely suppressed and that the weak decays were dominant. In this experiment, any $\mu^{*-}$ which decayed via $\nu_\mu$ + hadrons and $\nu_\mu + e^- + \bar{\nu}_e$ would be classified as a neutral current (NC) event whereas any decay $\mu^{*-} \rightarrow \nu_\mu + \mu^- + \bar{\nu}_\mu$ would be classified as a CC event. Since the total branching ratio of the first two channels is 70%, production of $\mu^{*-}$ would lead to an increase in the NC/CC ratio as the incident neutrino energy increased and more $\mu^{*-}$'s were created. Therefore, the results NC/CC = 0.296 ± 0.013 for $E_\nu$ < 100 GeV and 0.293 ± 0.017 for $E_\nu$ > 100 GeV [ 59] were used to set $m_{\mu^{*-}} \geq 8.5$ GeV/$c^2$ at 90% CL. In determining this limit, it was assumed that $\mu^{*-}$ production could be modelled after $\mu^-$ production by neutrinos and that the coupling strengths were identical. Even more sensitive to $\mu^{*-}$ production, as the authors point out, is the dependence of NC/CC on the energy deposited in the calorimeter. This includes the energy the incident neutrino gives to the hadrons through a CC as well as the energy of the electrons or hadrons which arise in the decay of the $\mu^{*-}$. In these events, a much larger percentage of the initial neutrino energy will be deposited in the calorimeter than that contributed by CC events. Therefore, if orthomuons are produced, NC/CC will rise with an increase in energy measured by the calorimeter. Since the data does not give evidence for this predicted behavior, the limit $m_{\mu^{*-}} \geq 10.3$ GeV/$c^2$ could be determined.

The observation of dimuon final states in neutrino interactions prompted speculation that such events were due to $\nu_\mu + N \rightarrow L^\circ$ + hadrons, $L^\circ \rightarrow \mu^- + \mu^+ + \nu_\mu$ [61 ]. The characteristics of these events, however, are most naturally explained by models in which the $\mu^-$ is produced at the $\nu_\mu$ vertex of the CC and the $\mu^+$ is created in the semileptonic decay of a charmed particle, often assumed to be the pseudoscalar meson $D^\pm$ [62 ], which is produced at the hadronic vertex. Since charmed mesons are expected to decay into hadrons + $e^+ + \nu_e$ as well, the observations of neutrino-induced events $\mu^- + e^+$ + hadrons are also explained [63 ].

However, in the SKAT bubble chamber, IHEP, Serpukhov, USSR, a $\mu^- e^+$ event has been observed in which these two leptons are created at a vertex which is distinct from that of the neutrino interaction. Baranov et al [64 ] interpret the event as the production of a short-lived neutral particle with mass between 1.4 and 2.5 GeV/$c^2$ and lifetime $\tau \sim 6 \times 10^{-12}$ sec. The event is explained most naturally by $\nu_\mu + N \rightarrow M^\circ$ + hadrons, $M^\circ \rightarrow \mu^- + e^+ + \nu_e$. The explanation $\nu_\mu + N \rightarrow D^\circ$ + hadrons, $D^\circ \rightarrow e^+ + \pi^-(K^-) + \nu_e$ or $D^\circ \rightarrow K^\circ_S + e^+ + \pi^- + \nu_e$ is much less favored because of the small probability that $\pi^-(K^-)$ will be misidentified as $\mu^-$. None of the other bubble chamber experiments have observed a $\mu^- e^+$ vertex distinct from the neutrino interaction.

The discovery of trimuon events $\mu^- \mu^- \mu^+$ in neutrino interactions revived speculation that heavy leptons were being produced here [65 ]. Among many models, one attractive candidate is $\nu_\mu + N \rightarrow \mu^{*-}$ + hadrons, $\mu^{*-} \rightarrow M^\circ + \mu^- + \bar{\nu}_\mu$, $M^\circ \rightarrow \mu^- + \mu^+ + \nu_\mu$ [66 ]. However, with the accumulation of more data it appears that the rate and characteristics of the events may be described by more conventional mechanisms [ 67].

In one process, muon pairs are electromagnetically produced off the $\mu^-$ in CC neutrino scattering. In these events, muon pairs also arise from virtual photons which are produced off the quarks which participate in the reaction. Trimuon events may also arise from the electromagnetic production of real vector mesons $\rho$, $\psi$, $\Upsilon$, etc. which subsequently decay into $\mu^+\mu^-$ pairs. Once again, although these and other conventional mechanisms may explain the majority, some of the trimuon and the more recently discovered tetralepton events may be due to heavy leptons [ 68].

F. Searches for Heavy Leptons in Proton and Electron Beams

Proton beamdump experiments provide a sensitive test for the existence of new neutrinos which are produced in the decays of short-lived hadrons and/or heavy leptons [ 69 ]. If the beamdump is thick and if the nuclear absorption length is very short compared to the mean free paths of $\pi$'s and K's then the decay of these particles into the ordinary neutrinos will be greatly suppressed. In beamdump experiments performed recently at CERN, the flux of neutrinos due to these known sources was reduced by $\sim$ 2000. In bubble chambers located further than 800 m downstream of the beamdump, Alibran et al [ 70], Hansl et al [ 71], and Bosetti et al [ 72] saw an excess of $e^-$ and $e^+$ events, the number of which was significantly greater than that expected to be produced by $\nu_e$ and $\bar{\nu}_e$ from the decays of $\pi$, K, and hyperon particles. A plausible interpretation is that these events are due to $\nu_e$'s and $\bar{\nu}_e$'s which are created in the semileptonic decays $D \to \text{hadrons} + e + \nu_e$ of charmed mesons which are created in the beamdump [ 70 ]. This interpretation is not without its problems, since it calls for a production cross-section for D mesons of the order of a hundred or several hundred $\mu$b/nucleon whereas an emulsion experiment [ 73 ] has set $\sigma \leq 1.5$ $\mu$b in the range of lifetimes expected for charm particles, namely, $10^{-14} \leq \tau \leq 10^{-12}$ sec. An interpretation in terms of heavy leptons, however, appears to run into more serious problems. In this view, the events are due to the creation in the beamdump of $L^0$'s which enter the bubble chambers and lead to the production of heavy leptons via $L^\circ + N \to L^- + \text{hadrons}$, $L^- \to L^\circ + e^- + \bar{\nu}_e$. Bosetti et al argues conclusively that because $L^- \to L^\circ + \text{hadrons}$ has a branching ratio > 50%,

an anomalously high NC/CC ratio would be expected, which the data does not support.

Although most of the events seen in the bubble chambers of these beamdump experiments may be due to charmed particles, some fraction may be due to new kinds of neutral leptons $L^\circ$. One commonly assumed production mechanism for $L^\circ$'s is through the decays $L^\pm \rightarrow L^\circ(\overline{L}^\circ) + X^\pm$. In turn, the heavy charged leptons may be generated in pairs $L^+L^-$ via the Drell-Yan mechanism in proton-nucleon collisions [ 74 ]. In this process, the annihilation of a valence quark from the proton or nucleon with a sea antiquark from the other particle gives rise to a time-like photon which creates pairs of charged particles. If one identifies $L^\pm$ with $\tau^\pm$, then the cross-section for this process in 400 GeV/c proton-nucleon collisions is $5 \times 10^{-35}$ $cm^2$/nucleon or 0.05 nb/nucleon [ 75 ]. Since Alibran et al calculate that the data may be explained if the cross-section for producing $\nu_e$'s in the beamdump is $32^{+15}_{-10}$ μb/nucleon, it is clear that any $L^\circ$'s created by the Drell-Yan mechanism will be greatly outnumbered. However, as pointed out in Chapter II-D of this dissertation, $L^\circ$'s also can arise in the decays of $F^\pm$ mesons via $F^+ \rightarrow \tau^+ + L^\circ$, $\tau^+ \rightarrow L^\circ + X^+$ or $F^+ \rightarrow E^\circ(M^\circ) + e^+(\mu^+)$ where the branching ratio may be as high as $\sim$ 2%. If we assume that the proton-nucleon production cross-section of $D^\pm$ mesons is 100 μb/nucleon and that one $F^\pm$ is produced for every D , then the cross-section for $L^\circ$ production in $F^\pm$ decay is 2.0 μb/nucleon. Thus, one might expect 1 $L^\circ$ for every 16 $\nu_e$'s produced in charm decay. Since the Q-value of $F^\pm$ decays $Q = m_{F^+} - m_{L^+} - m_{L^\circ}$ may be less than that of the semileptonic decays of $D^\pm$ mesons into $\nu_e$ and $\overline{\nu}_e$, the neutral leptons $L^\circ$ may be beamed

toward the bubble chambers in a cone of smaller angle than that for the $\nu_e$ and $\bar{\nu}_e$. This effect would further increase the event rate due to L°'s. Bacause Hansl et al report 130 $\nu_e$ and $\bar{\nu}_e$ events, Alibran et al 8.9 events, and Bosetti et al report 11 $\nu_e$ and 4 $\bar{\nu}_e$ CC events, it is possible that they could have observed 10 events due to L°'s from $F^{\pm}$ decay. Clearly, the observation of L° interactions in bubble chambers may have to wait for higher luminosity beamdump experiments of the future.

Faissner et al [ 76 ] report on a search in the Gargamelle bubble chamber at CERN for the interactions and/or decays of neutral particles which were produced in 26 GeV/c proton-nucleon interactions and which penetrated a 22 m thick beamdump. No signal for such processes was observed. To set an upper limit on the production and decay of L°'s, the expected number of events was calculated using a model that L°'s were produced via the Drell-Yan process as in $p + N \rightarrow L^+ + L^- +$ hadrons, $L^{\pm} \rightarrow L^{\circ} + \pi^{\pm}$ where $m_{L^+} \leq 3$ GeV/$c^2$. The results of that computation were used to rule out L°'s of lifetime between $10^{-6}$ and $10^{-3}$ seconds.

Neutral heavy leptons of this lifetime had been hypothesized by De Rujula, Georgi, and Glashow [ 77 ] to explain the observation of five anomalous events in an cosmic ray experiment designed to electronically detect neutrino-induced interactions deep underground [ 78 ]. In the five events, there were typically three charged particle tracks which could be traced to a vertex in the air between the rock walls and the detector. The experimenters, Krishnaswamy et al, interpreted the events as neutrino-production in rock of a new particle of mass between 2 and 5 GeV/$c^2$ and of lifetime $10^{-9}$ sec. which decays into at least three charged particles.

De Rujula, Georgi, and Glashow proposed, however, that the events are due to the 4-body decay of $L^{\circ}$'s which traverse the rock shield with little interaction. The $L^{\circ}$'s, in turn, arise from the decays of $L^{+}L^{-}$ pairs which are electromagnetically produced by cosmic rays in the atmosphere.

A search was subsequently performed by Benvenuti et al [79] for long-lived penetrating neutral particles in the neutrino beam at Fermilab. These particles were required to be produced in 300 GeV/c proton-nucleon collisions, to penetrate an earth shield, to pass through scintillation counters which vetoed muon-induced events, and to decay within a volume which was empty except for several thin metal sheets. The 2 events observed was consistent with the number of events expected for ordinary neutrino interactions in the sheets, namely 3. Hence, no signal for long-lived neutral heavy leptons was found. The integrated flux of neutrinos with energy > 5 GeV was 500 times larger for this experiment than for the cosmic ray experiment. The results of this neutrino beam experiment therefore contradict the results of Krishnaswamy et al. Furthermore, the experimental results rule out the hypothesis of De Rujula, Georgi, and Glashow.

A search has been performed for the production by 19 GeV/c electrons of neutral particles which penetrate a 37 m steel and earth shield and interact or decay in optical spark chambers of high mass [80]. The number of neutrino events observed was in agreement with that expected if $\pi$ and K decays were the only source of neutrinos present. The predicted neutrino event rate was based on a detailed calculation which considered production of $\pi$'s and K's by photons and by other $\pi$'s and K's

in the electron-initiated shower. A calculation of the cross-section for $e + N \rightarrow L^+ + L^- +$ anything, $L^\pm \rightarrow L^\circ + \pi^\pm$ as a function of $m_{L^+}$ was used to calculate the number of $L^\circ$ decays or interactions that could have been observable. Because of the low acceptance of the spectrometer, the experimental result was $m_{L^\pm} > 0.4$ GeV/$c^2$ at 98% CL.

Finally, a number of searches have been conducted for the production of stable or long-lived $L^\pm$ in proton-nucleon collisions. Appel et al [ 81 ] used a 1.1 km long beam line tuned to a particular momentum to measure the difference in the arrival times of particles which were produced nearly simultaneously. Clearly, for particles of a definite momentum, the heavy particles will arrive later than the light-mass $\pi$'s. The experiment was possible because at the Fermilab accelerator, protons are extracted in buckets which have a full width at half-maximum of 1 nsec and are spaced 18.83 nsec. apart. Hence, there was a high degree of simultaneity in the creation of different particles in seperate 300 GeV/c proton-nucleon interactions. The arrival times of pions, protons, and deuterons were smeared typically only a few nanoseconds. Since no other particles were observed in the detector which employed scintillation counters and a Čerenkov counter, upper limits on the production cross-section for very long-lived $L^\pm$ were established for masses between $\sim$ 2 and 19 GeV/$c^2$. The 90% CL upper limit on the production of $L^-$ of mass between 7.5 and 18.7 GeV/$c^2$ is $d^3\sigma/dpd\Omega = 0.016$ $\mu$b/GeV/c - sr per nucleon.

Albrow et al [ 82 ] report a search conducted at the CERN ISR for the production at small angles to the colliding proton beams of stable particles of charge $q \geq 1$ and mass $\geq$ deuteron mass. The center-of-mass energy

was $\sqrt{S}$ = 53 GeV. It was required that these particles be produced with a velocity large enough to satisfy a coincidence between several widely-spaced scintillation counters, but not so large as to be rejected as a proton, kaon, or pion by the Čerenkov counters. A magnetic spectrometer was used to determine the momentum-to-charge ratio p/q for each event. The particles mass to charge ratio was then calculated using the velocity derived from time-of-flight measurements. Deuterons, antideuterons, and a triton were observed, but no heavier particles. Upper limits for the production of stable charged particles were established for various charges and masses between 3 and $\sim$ 35 GeV/$c^2$. The 90% CL upper limit on the production of singly-charged particles of mass between 5 and 15 GeV/$c^2$ is $d^3\sigma/dpd\Omega$ = 2.5 nb/GeV/c - sr.

Two experiments at Fermilab have looked for proton-nucleon production of long-lived heavy penetrating particles with transverse momenta between 1 and 2.5 GeV/c [83 ,84 ]. A similar experiment conducted at IHEP, Serpukhov, USSR searched for the production of these particles with zero transverse momentum [85 ]. In all three experiments, the particles were required to pass through a hadron shield and then into a spectrometer. In each experiment, the signature for a heavy charged lepton was taken to be no count in the Čerenkov counters and a minimum-ionizing signal in a calorimeter. No evidence for such particles was found in any of the experiments. Assuming the Drell-Yan mechanism for production of $L^+L^-$ pairs in 70 GeV/c proton-nucleon collisions, the IHEP group calculated the number of events that would have been detected. Their 90% CL upper limit on the differential cross-section for heavy lepton production is

$d^2\sigma/d\Omega dp = 1.6 \times 10^{-37}$ cm$^2$/ster - GeV/c. Because their detector was close to the production target, they are able to rule out the existence of $L^{\pm}$'s with masses of 1 GeV/c$^2$ and lifetimes greater than $2 \times 10^{-9}$ sec up to masses of 4.5 GeV/c$^2$ and lifetimes greater than $4 \times 10^{-7}$ sec. For the experiments conducted at Fermilab, a production model of the form $p + N \rightarrow L^{\pm} + N'$ was assumed for various masses of $L^{\pm}$. Masses for $L^{\pm}$'s in the range 1.0 to 6.8 GeV/c$^2$ were ruled out by Cronin et al. For masses in this range and for stable $L^{\pm}$, they established a 90% CL upper limit for the invariant production cross-section per nucleon of $Ed^3\sigma/d^3p = 5.4 \times 10^{-39}$ cm$^2$ GeV$^{-2}$. For $L^{\pm}$ which are not stable, this upper limit should be multiplied by $\exp(1.22 \times 10^{-8}\ m_{L^{\pm}}/\tau)$. Bintinger et al set $Ed^3\sigma/d^3p = 6.4 \times 10^{-35}$ cm$^2$ GeV$^{-2}$ at the 90% CL for $1 \leq m_{L^{\pm}} \leq 5$ GeV/c$^2$. Because the detector of this latter experiment was within 10 m of the production target, they also set an upper limit of $10^{-34}$ cm$^2$ GeV$^{-2}$ for the cross-section of $L^{\pm}$'s of lifetime 3.5 ns and mass 2 GeV/c$^2$.

# CHAPTER III

# THE SEARCH FOR NEUTRAL HEAVY LEPTONS

## A. General Aspects of the Experimental Design

Long-lived neutral heavy leptons which are generated in proton-nucleon collisions can be detected by their ability to penetrate large amounts of matter without interaction or absorption and by their decay into charged particles in a long region downstream of the production point. Analysis of the charged particle tracks by a magnetic spectrometer will facilitate the rejection of background events and allow a determination of the $L^\circ$ mass.

A high intensity proton beam and a massive hadron absorber are absolutely essential to the experiment since the production cross-sections for $L^\circ$'s are expected to be low. From the estimates made earlier, the production cross-section for $L^\circ$'s ranges from $2 \times 10^{-31}$ $cm^2$/nucleon for $L^\circ$'s produced in $F^\pm$ decays to $10^{-34}$ $cm^2$/nucleon for $L^\circ$'s produced in the decay of $\tau^+\tau^-$ pairs produced by the Drell-Yan mechanism. Assuming the latter process and using the 400 GeV/c proton-nucleon strong interaction cross-section of 40 mb/nucleon [ 3 ], one finds that only ~2 in every $10^9$ protons will generate an $L^\circ$. Because many $L^\circ$'s may decay before they reach the detector or after they pass through it, a total of at least $10^{13}$ protons will be required to achieve a useful sensitivity. Since the detector will search for $L^\circ$'s by triggering on the passage of charged particles, all of the incident protons and the charged particles they produce must be absorbed. If the target is built of iron or heavier metal and is 5 m thick - in other

words, a beamdump - then since the nuclear absorption length $\lambda_A$ is $\lesssim$ 17.1 cm [ 3 ], only 2 out of $10^{13}$ protons will emerge. Of course, many more strongly - interacting particles will be produced in the proton collisions, but these will be attenuated just as severely.

Unfortunately, an unavoidable fraction of the $\pi$'s and K's created in the hadronic shower will decay into muons which will pass through the beamdump and into the detector. Being ~200 times more massive than electrons, the radiation length for muons - the distance after which the $\mu$ has lost $(1 - e^{-1}) \sim 63\%$ of its initial energy in bremsstrahlung processes - is $(200)^2 \times 0.0176$ m $\approx$ 700 m in iron. Since the energy loss to ionization is 11.6 MeV/cm for minimum-ionizing particles in iron [ 3 ], 400 GeV $\mu$'s will be stopped only after 350 m. Muons will therefore penetrate a 5 m beam dump with little energy loss. If the beam dump is a magnet whose opening has been plugged, then its magnetic field can be used to sweep aside the lower momentum $\mu$'s.

Although the muons cannot be absorbed, scintillation counters can be erected on the downstream side of the magnet to detect their passage and to veto the trigger logic. This is possible only if the $\mu$ flux is low enough that the detector is not gated off all the time. The probability that a $\pi$(K) decays into $\mu$ before it is absorbed is $\lambda_A/(\gamma c\tau)$, where $c\tau$ = 780.4 cm for $\pi^{\pm}$ and 370.9 cm for $K^{\pm}$ [ 3 ] and $\gamma$ is the Lorentz factor. Measurements of the yield of particles produced in p - p collisions at the CERN ISR indicate that for 400 GeV/c protons on a fixed target, there will be multiplicities of $4.1\pi^+$, $3.3\pi^-$, $0.39K^+$, and $0.25K^-$ per proton [ 86 ]. Assuming that each particle is created with a momentum of 40 GeV/c and taking into account the branching ratio of

100% (64%) for $\pi(K) \rightarrow \mu + \nu$ [ 3 ], one finds that $8 \times 10^{-4}$ $\mu$'s are created by every proton incident on an iron beamdump. The protons at Fermilab are extracted from the main accelerator in 1 nsec wide buckets spaced 18.83 nsec apart. To prevent the detector from being "dead" all the time, the probability that a bucket has a muon must be kept less than unity: one must maintain the proton flux at less than $6 \times 10^{10}$ per 1 second long beam spill.

Although the proton-induced hadronic and electromagnetic shower will be absorbed by the beamdump magnet, neutral hadrons electro-produced by muons in the last absorption length may emerge, pass through the scintillation counters and decay in the spectrometer. If the invariant mass of these particles coincides with that of $K^\circ_S$ or $\Lambda^\circ$, the event can be rejected as a candidate for an $L^\circ$ decay. However, if the particle decays as $K^\circ_L$ via a 3-body decay, the invariant mass will not peak at a particular value. On the other hand, it is highly likely that these events will be self-vetoed because the muon will have some energy left and will pass through the charged particle veto scintillation counters. The fraction of these muons which are stopped in the beam-dump can be estimated from the number of virtual quanta $N_\gamma$ in the "photon cloud" surrounding the muon which have an energy $E_\gamma$ equal to that of the muon $E_\mu$. The number of high-energy virtual photons varies as $E_\gamma^{-1} \times (\alpha/2) \times \exp(-2\, E_\gamma b_{min}/\lambda_\mu E_\mu)$, where $\alpha = 1/137$ is the fine structure constant, $b_{min} = 5.3 \times 10^{-13}$ cm in iron, and $\lambda_\mu = 1.9 \times 10^{-13}$cm is the de Broglie wavelength of the muon [ 87]. At $E_\gamma = E_\mu = 20$GeV, $N_\gamma = 6 \times 10^{-7}$. The cross-section for $\mu + p \rightarrow K^\circ_L$ + anything can be

estimated from the cross-section for $\gamma + p \rightarrow \pi^- +$ anything which has been measured by Moffeit et al [ 88 ]. This work indicated that $\sigma$ ($\gamma + p \rightarrow \pi^- +$ anything) $\sim$ 100 $\mu$b at s = 6GeV$^2$. Since the cross-section is constant to within 50% between s = 6 and 18 GeV$^2$, I will assume a cross-section of 100 $\mu$b at s = 40 GeV$^2$. At this center-of-mass energy squared, the data can be extrapolated to a mean $\pi^-$ multiplicity of 1.6. The yields of $K^+$ and $K^-$ have been measured in an electroproduction experiment relative to the $\pi^+$ and $\pi^-$ yields [ 89 ]. Normalizing their results to $\pi^-$, one finds $\langle K^-/\pi^- \rangle$ = 0.11 and $\langle K^+/\pi^- \rangle$ =0.24 where the averages have been performed over the Feynman variable $x = P^{cm}/P_{max}^{cm}$ from x = 0.2 to 1.0. Assuming that the K° yield will be the average of $K^{\pm}$ yields, then, since $\langle K^\circ_L/K^\circ \rangle$ = 0.5, one finds $\langle K^\circ_L/\pi^- \rangle$ = 0.09. Putting all the above facts together, one gets $\sigma$ ($\gamma + p \rightarrow K^\circ_L +$ anything)= 14 $\mu$b/nucleon or 784 $\mu$b/ Fe atom. The probability that the $K^\circ_L$ will emerge from the beamdump is just the ratio of this cross-section to that for $K^\circ_L + Fe^{56} \rightarrow$ anything. The latter cross-section can be estimated using $K^- + p$, $K^- + d$ data to be 56 X 20 mb = 1.1 b [ 3 ]. When we multiply this probability with the probability that the muon will be stopped, we get 4.3 X $10^{-10}$. If a total of $10^{13}$ protons are targeted into the beam dump, 8 X $10^9$ $\mu$'s will be generated, and hence 3.4 $K^\circ_L$ 's without accompanying muons. Since the branching ratio into charged decays is 0.79, only 2.7 events at most could be detected. However, within a 10 m long region, the probability of a $K^\circ_L$ decay is 10 m/($\gamma c\tau$) where $c\tau$ = 1554 cm [ 3 ]. If their momenta are 20 GeV/c, only 0.05 $K^\circ_L$ charged particle decays would be expected. Even if such events are observed, it is unlikely they could satisfy a criterion that

the total momentum vector of an $L^{\circ}$ 2-body decay extrapolate back to the beam-axis near the frontface of the beamdump. Hence, this background is small.

Neutrinos which are produced by $\pi$ and K decays at the front face of the magnetized beamdump may produce $K^{\circ}_{L}$ 's which emerge from the backface and decay in the detector. If this occurs in a neutral current interaction, then the event might not be vetoed. However, strangeness-changing neutral currents have never been observed, so the rate of such events is nil [ 90]. On the other hand, long-lived strange particles might be produced in pairs by neutrinos. Making the extreme overestimate that every NC event contains a $K^{\circ}_{L}$, we will calculate an upper limit to this background. Let's assume $\langle E_{\nu} \rangle \sim 20$ GeV. At this energy, the total neutrino cross-section per nucleon is $0.8 \times 10^{-38} \times E_{\nu}$ $cm^2$ [ 91]. Since $\sim$30% of all neutrino interactions are neutral current [ 59], we have $\sigma = 4.8 \times 10^{-38}$ $cm^2$/nucleon. Therefore, one finds that during a total of $10^{13}$ protons on target, only 0.02 $K^{\circ}_{L}$ 's would be created which could emerge from the beamdump. Hence, this background is completely negligible.

Finally, to reduce the background of events in the decay volume due to cosmic ray, neutron, neutrino, or photon interaction which may be mistaken for the decays of neutral heavy leptons, this volume will be kept at a high vacuum. The plan view of the experimental apparatus used to accomplish the experiment is presented in Figure 1 [ 92].

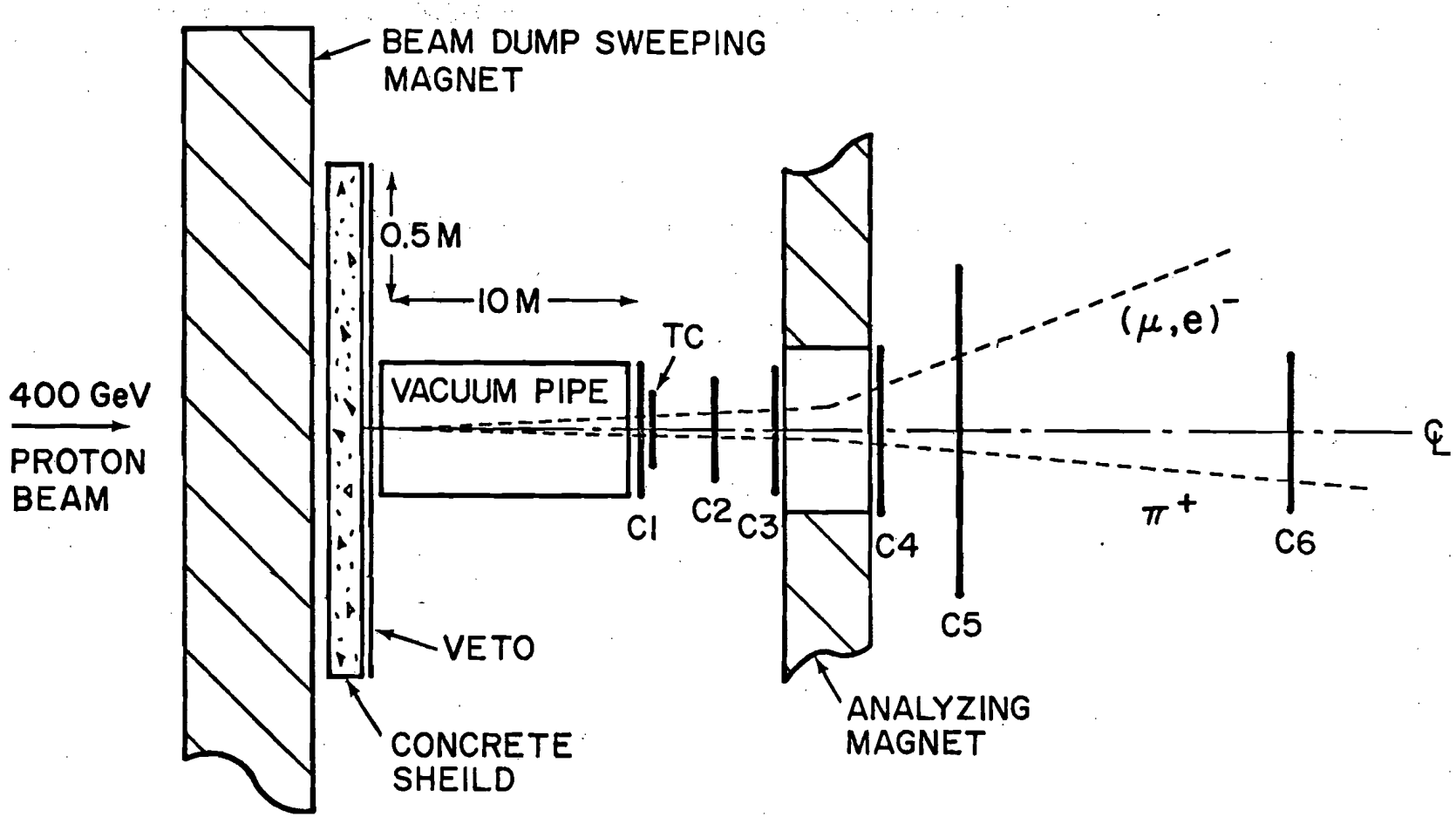


Figure 1. Plan view of the experimental apparatus. C1 through C6 are MWPC's and TC is a scintillation counter used in the trigger. The veto consists of two planes of scintillation counters in coincidence. A possible L° decay is indicated.

## B. Proton Beam

A high intensity 400 GeV/c proton beam with a low contamination of $\pi$'s and K's was used. These desirable conditions could be achieved at the M2 beam line in the Meson Laboratory at Fermilab. Protons which the main magnet ring had accelerated to 400 GeV/c were transported to the Meson Laboratory production target. Because the M2 beam line accepts particles coming off this target at the small production angle of 1 mr, a high flux of diffractively-scattered protons is possible. Moreover, because $\pi$'s and K's produced at the target have momenta which is considerably lower than 400 GeV/c [ 93 ], a high purity beam can be attained by tuning the magnets of this beam line to 400 GeV/c protons. It is undesirable to have $\pi$'s and K's in the beam, because their decay will create a copious source of $\mu$'s which will pass through the charged particle veto. In turn, the veto will gate off the electronics more often during the beam spills and reduce the sensitivity of the search.

It is also desirable that the proton beam be well-focused and well-positioned as it strikes the beamdump. A signal for an $L^{\circ}$ can then be required to have its origin in a localized region at the front face of the beamdump. 1.5 m before the beamdump a table was located which supported 3 scintillation counters held together in a frame to preserve relative alignment. The diameters of the counters were 0.635 cm, 1.27 cm, and 1.27 cm with a 0.635 cm hole in its center. For low intensities of protons, the counters were used in coincidence to assist in positioning and focusing the beam by maximizing the core-to-halo ratio. Typically 60% or more of the beam was contained within the 1/4-inch diameter core.

This was confirmed by exposing photographic emulsions placed over the front face of the collimator magnet which was used as the beamdump. These photographs showed a beam spot always less than 1 cm in diameter and always centered on the collimator entrance. For proton intensities greater than $10^6$/sec, the scintillation counters were extracted from the beam by a stepping motor. The position and focus of the beam were then monitored during data-taking by a segmented wire ion chamber (SWIC) lying on the table.

Positioned behind the SWIC was an argon-filled ion chamber whose measurement of the integrated proton luminosity of each beam spill was read into the on-line PDP11-45 computer. The ion chamber was calibrated to ± 10% with an electrometer which recorded an integrated luminosity of $5.2 \times 10^{11}$ protons over ∿300 beam spills. The core/halo scintillation counters provided a confirming calibration that was only 40% higher at much lower proton intensities where the response of the ion chamber is not linear.

## C. Beamdump

A 5.4 meter long sweeping magnet with a plugged collimator system was used as the beamdump. The collimator system was built out of brass, hevimet, and steel and consisted of three sections. The pre-collimator was composed of a number of brass blocks in which the diameter of the cylindrical channel decreased in steps from 20 mm to 5 mm. The hevimet defining collimator was 4 mm in diameter. This was followed by a shadow collimator composed of brass blocks in which the channel increased in steps to 11 mm in diameter. Each block was plugged with a form-fitting stainless steel rod, thus guaranteeing no line-of-sight path through the collimator.

The brass and hevimet blocks were sandwiched on top and bottom between two bars of steel running the length of the magnet. After the completion of the experiment, the data analysis revealed that a number of strongly-interacting particles had their origin in these long cracks above and below the brass blocks. Along the sides of the blocks, no line-of-sight path was possible because the horizontal dimensions of the brass blocks and the steel-lined gaps into which the blocks fit decreased in steps from the outside to the middle of the magnet.

Downstream of the magnet, a 1.3 meter thick wall of concrete was erected to absorb any neutrons that may not have been thermalized inside the magnet.

## D. Charged Particle Veto

Downstream of the concrete shield, two walls of scintillation counters were erected. These were set up to veto charged particles, mostly muons, which the magnetized beamdump did not succeed in absorbing or deflecting. The counters were each 30.5 cm X 30.5 cm X 0.635 cm and were held together in an array 91.5 cm wide by 91.5 cm high whose center was 10 cm higher than the beam-axis. By using many small counters, the singles rate in each counter could be kept $< 10^6$/sec. To protect against saturation in the photomultiplier bases, capacitors were added to the last several stages of amplification to increase the reservoir of available charge. In order not to count neutrons knocking protons out of nuclei in the scintillation plastic and the protons giving rise to light, each counter was put in coincidence with the counter immediately downstream. The outputs of these coincidence units were then OR'd together to produce a signal indicating the passage of a charged particle. This is illustrated in Figure 2, where the upstream counters are labelled A, B, ....O and the downstream A', B', ....O'.

With the sweeping magnet generating a 21 kiloGauss field pointing upward, the $\mu^+$ ($\mu^-$) lobes from $\pi^+$ ($\pi^-$) and $K^+$ ($K^-$) decays passed on the left (right) side of the counter array as one looked into the beam. This field configuration was found to produce the lowest trigger rate in the spectrometer among the other possible configurations, namely with the field turned off or with it directed downwards. For these studies, a variety of different triggers were attempted. Each one was usually the coincidence of two scintillation counters in the spectrometer

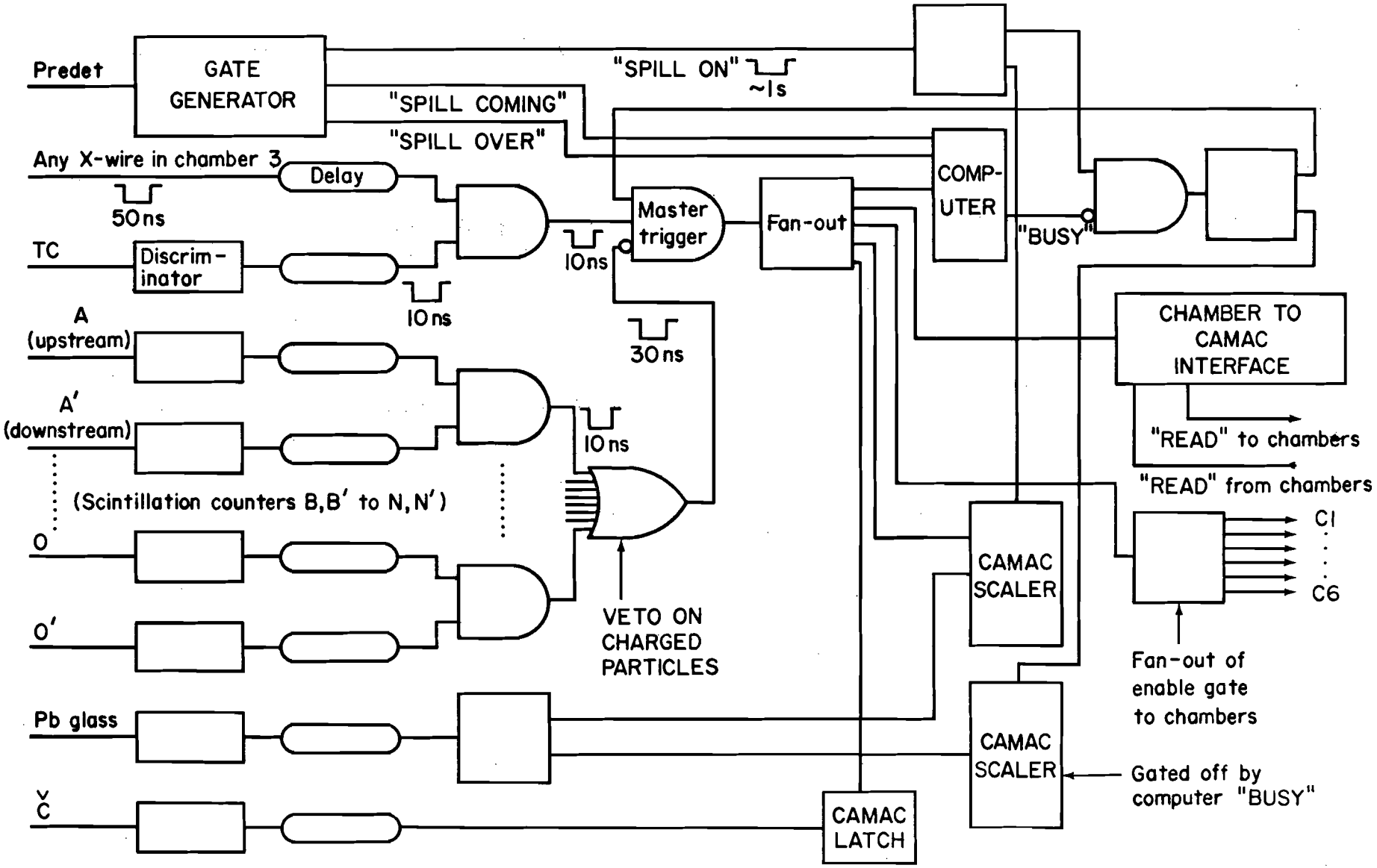


Figure 2. Trigger electronics

and a veto signal was provided by the large array of counters. The locations of the two counters along the beam-axis in the spectrometer was the quantity most often varied. Unfortunately, the trigger rate was always found to be unacceptably high. To understand the origin of the charged particles, the intensity at various positions in the muon lobes was mapped out. This was accomplished by placing the 91.5 cm X 91.5 cm array of 9 pairs of counters at three positions across the beam-axis. The results are shown in Figure 3, normalized to the incident proton intensity. Integration over the total flux yields $1.4 \times 10^{-3}$ charged particle/incident proton, which is within a factor of 2 of the estimate made in the first section of this chapter. To reduce the trigger rate still further, more scintillation counters were installed. The final configuration of counters is shown in Figure 3 to be of height 91.5 cm and of width 220 cm. To prevent leaks of charged particles which pass through the array of scintillation counters undetected, several runs of data were taken in which the trajectories of single-muon events were extrapolated back to the array. The appropriate counters were then moved to increase the overlapping with their neighbors. These measures proved very effective. Nonetheless, muons coming around the sides of the counter array still provided a substantial trigger rate. To a lesser extent, counter inefficiency due to the later-discovered crazing of the scintillation plastic and the cloudiness of the glue joints between the plastic and the light-pipe contributed to the unvetoed muon flux.

With the sweeping magnet at 21 kiloGauss and the scintillation counters in this present configuration, any neutral heavy lepton which

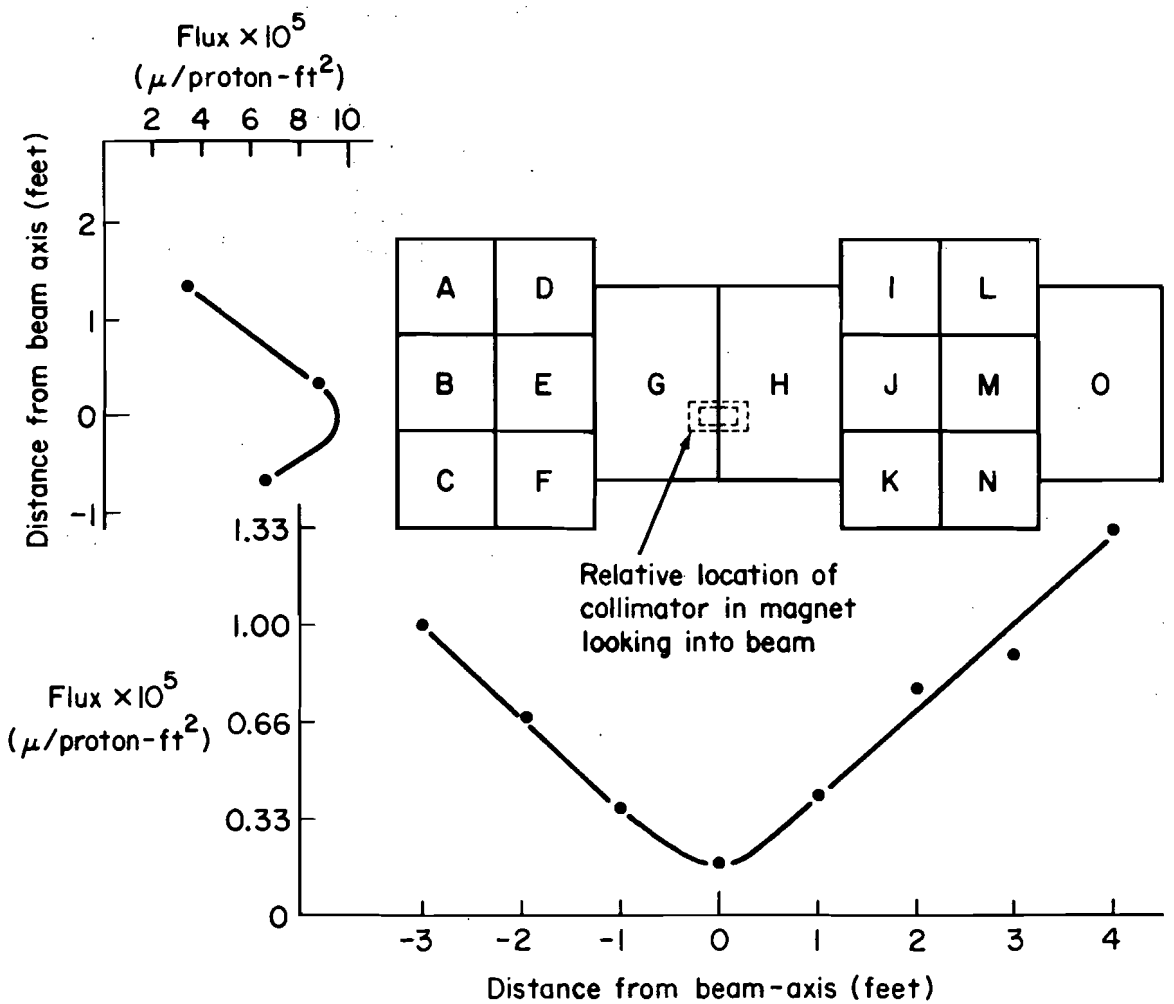


Figure 3. Charged particle flux through scintillation counters A–O. The final configuration of counters is shown as well as the relative location of the plugged collimator in beamdump magnet.

may have been produced accompanied by a muon of momentum $\gtrsim$ 10 GeV/c would self-veto itself.

## E. Spectrometer

As Figure 1 shows, the charged particle veto counters were followed by an evacuated pipe in which the decays of neutral heavy leptons would be searched for. The aluminum pipe was 9.2 m in length, 36 cm in diameter, and was maintained at a pressure of 260 μ Hg. The pipe was followed by three multi-wire proportional chambers (MWPC's), a superconducting analyzing magnet, and then three more MWPC's. Immediately behind the first MWPC, a 30.5 cm X 30.5 cm X 0.635 cm scintillation counter labeled TC for trigger counter was positioned.

The design of each MWPC was similar. As illustrated in Figure 4, two planes of signal wires, one vertical, the other horizontal, were sandwiched among 3 planes of wires held at negative high voltage (H.V.). The outer HV planes were themselves sandwiched between two plastic windows. Through the volume between these windows flowed a "magic gas" mixture of 70% argon, 30% isobutane, and 0.3% freon which was bubbled through liquid methylal at 40°F. The signal plane was composed of gold-plated tungsten wires spaced 2mm apart while beryllium-copper wires with 1 mm spacing formed the H.V. planes. Before the onset of each beam spill, the H.V. was ramped up from ∿3000 volts to 4200 volts in all the chambers. Electrons created by the passage of an ionizing charged particle through the chamber gave rise to an avalanche of electrons onto the nearest signal wires. The signals picked up by these sense wires were amplified, discriminated, and then split in two. One signal was OR'd together with its counterparts from other wires in the plane of that chamber to form a fast logic pulse for use in the trigger logic. The second signal was

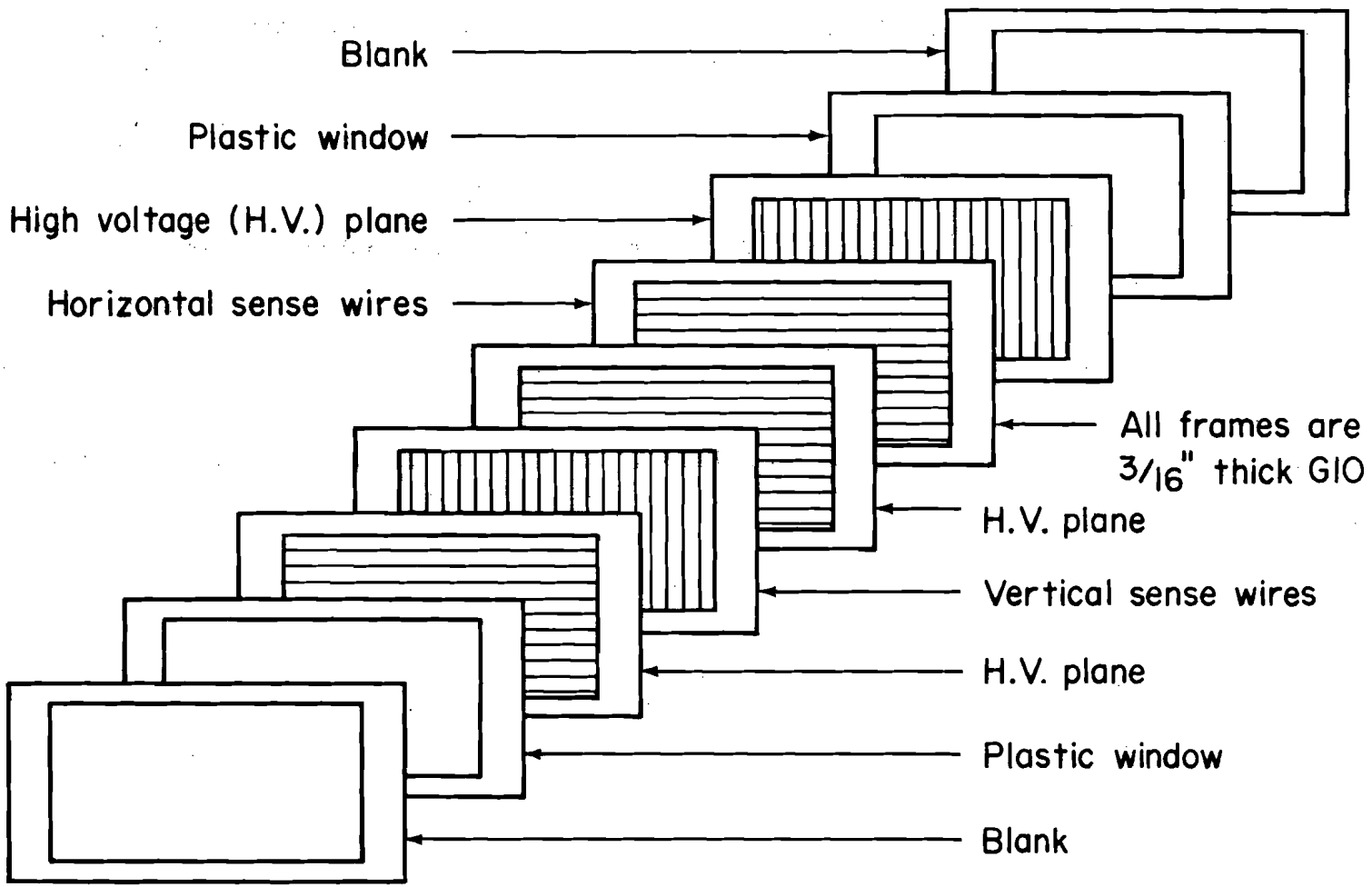


Figure 4. Multi-wire proportional chamber construction.

delayed so as to be in time with an enable pulse which was sent to the chambers whenever the trigger logic was satisfied. The coincidence of these last two pulses was then used to set latches for all the wires in the 6 chambers which had sensed the passage of a charged particle. The unique 16-bit addresses of these wires were then read out sequentially into a PDP11-45 computer via a CAMAC interface module. To resolve track ambiguities, the second MWPC was positioned with its horizontal and vertical sense planes at an angle of 45° with respect to those of the other chambers.

The superconducting magnet was 2.9 m in length and had an aperture of 20 cm by 60 cm. During the data-taking the magnetic field was 3.6 kiloGauss, corresponding to a transverse momentum kick of 0.311 GeV/c. Before the sweeping magnet was plugged, 400 GeV/c protons incident on a thin Pb target in front of the collimator were used to produce $K^\circ_S$'s. The momentum transfer given above was then found by requiring that the invariant masses of $\pi^+ \pi^-$ pairs agree with the mass of the $K^\circ_S$ -- 497.7 MeV/$c^2$ [ 3 ]. A 400 GeV/c proton beam run straight thru the spectrometer yielded a measurement of the field strength in good agreement. This low magnetic field strength was chosen in order not to compromise the acceptance for low momentum decay products of L°'s. At this value, the acceptance of the last three chambers in the spectrometer decreased for singly-charged particles of momentum $< 5.0$ GeV/c and vanished for momenta $\leq 1.9$ GeV/c.

An 11 m long 1.5 m diameter helium-filled gas threshold Cerenkov counter was located between the fifth and sixth MWPC's. Because its

pressure was not monitored during data taking, it was not used in the analysis. An array of 72 Pb-glass blocks, photomultipliers, and analog-to-digital converters existed behind the last MWPC and its signals were also recorded on magnetic tape. However, because it had not been calibrated, it too was not used in the analysis. The output of one of the Pb-glass blocks was fanned-out; one signal was scaled during each ∿1 second long beam spill; the other signal was scaled during beam spills only when the PDP11-45 was not busy reading spectrometer data into memory and/or writing it to tape. The ratio of these numbers was used to measure the fraction of time that the spectrometer was "alive". This logic is indicated in Figure 2.

Table 2 contains a summary of the important dimensions and locations of the equipment used in the search for neutral heavy leptons.

TABLE 2

Dimensions of the Experimental Apparatus

| | | |
|---|---|---|
| A. Beamdump Magnet: | | |
| 1. Frontface | Z = | - 540.0 cm |
| 2. Backface | Z = | 0.0 cm |
| B. Concrete Shield: | | |
| 1. Frontface | Z = | 70.0 cm |
| 2. Backface | Z = | 200.0 cm |
| 3. Horizontal (H) Size | | 490.0 cm |
| 4. Verticle (V) Size | | $\gtrsim$ 250.0 cm |
| C. Charged Particle Counter Array: | | |
| 1. Front | Z $\simeq$ | 230.0 cm |
| 2. Back | Z $\simeq$ | 290.0 cm |
| 3. H Size | | 220.0 cm |
| 4. V Size | | 91.5 cm |
| D. Aluminum Vacuum Pipe: | | |
| 1. Front | Z = | 332.7 cm |
| 2. Back | Z = | 1251.0 cm |
| 3. Inner Diameter | | 18.0 cm |

E. Trigger Counter TC:

| | | | | |
|---|---|---|---|---|
| 1. | Location | Z = | 1330.0 | cm |
| 2. | H Size | | 31.5 | cm |
| 3. | V Size | | 31.5 | cm |
| 4. | Thickness | | 0.635 | cm |

F. Superconducting Analyzing Magnet:

| | | | | |
|---|---|---|---|---|
| 1. | Frontface | Z = | 1905.4 | cm |
| 2. | Backface | Z = | 2195.4 | cm |
| 3. | H Size of Aperture | | 60.0 | cm |
| 4. | V Size of Aperture | | 20.0 | cm |

G. MWPC's (sense wire spacing = 0.2 cm) :

| chamber | H(V) size in wires | H(V) center wire | Z-location | |
|---|---|---|---|---|
| C1 | 256(128) | 123.6 (63.9 ) | 1299.1 | cm |
| C2 | 128(128) | 69.35(68.35) | 1606.6 | cm |
| | (rotated 45°) | | | |
| C3 | 256(128) | 134.56(63.61) | 1858.3 | cm |
| C4 | 316(128) | 167.9 (64.75) | 2255.2 | cm |
| C5 | 640(192) | 321.0 (96.3 ) | 2581.0 | cm |
| C6 | 256(128) | 110.0 (62.3 ) | 3878.3 | cm |

F. Trigger Electronics and Running Conditions

For most of the L° search data, the trigger was defined by TC · MWPC 3 $x$ · $\overline{\text{VETO}}$, where TC was the scintillation counter after the first MWPC, MWPC 3 $x$ was the fast logic pulse from any vertical sense wire in the third chamber, and $\overline{\text{VETO}}$ was provided by the two walls of counters to veto charged particles. The logic is diagrammed in Figure 2. Several runs were taken where a scintillation counter behind the second chamber was substituted for MWPC 3 $x$. Although it was possible to use coincidences between the left and right halves of the chambers in the trigger, the above loose triggers were chosen in order not to further bias the spectrometer acceptance to L°'s of a particular momentum and mass. The penalty paid was severe: most of the triggers were due to single charged particles which eluded the veto counters. As a direct consequence, there was a serious "dead-time" problem. At the average incident 400 GeV/c proton intensity of $2 \times 10^9$ per 1 second-long beamspill, the trigger rate was $\sim$ 350/spill. Since the maximim data-taking rate allowed by the computer was $\sim$ 500/spill, the spectrometer was "dead" 70% of the time. The out-of-time accidental rate in the trigger was measured to be $\sim$20% of the total rate.

At this proton intensity, 80,000 events were recorded on a single magnetic tape in 45 minutes. During the course of the experiment, $3.58 \times 10^6$ triggers were recorded on 50 data tapes in 40 hours.

Before the start of the experiment and before the collimated sweeping magnet was plugged and its magnetic field turned on, several runs were collected with a low intensity proton beam passing through the spectrometer.

These runs were used to define the centers of the MWPC's. Because the positions of the chambers along the beam-axis were also measured, a coordinate system in which to define particle trajectories could be constructed.

# CHAPTER IV

# DATA REDUCTION

## A. Track Reconstruction

To make the search for possible $L^{\circ}$ decays more convenient, the raw data tapes were run through a program which filtered out only those events in which there were two or more tracks in the first three MWPC's. For each pair of horizontal-wire "hits" in the first and third MWPC, a search was performed through all possible hit positions in the u - v plane of the rotated second MWPC for those which would complete the line. The procedure was then repeated for every pair of vertical-wire hits in the first and third MWPC, until all possible tracks had been found.

Of the 3.6 million triggers collected, no tracks were found in $\sim$2.3 million events and only 1 track was found in $\sim$ 1.1 million events. The last two numbers are consistent with a 20% accidental rate in the trigger and the fact that the second MWPC was 51.2 cm X 51.2 cm and, in its rotated position, covered only 45% of the third chamber, whose dimensions were 51.2 cm high by 102.4 cm wide. In other words, only 80% of all triggers were valid and of these, 55% were due to muons which avoided the second MWPC but traversed the scintillation counter TC and the third MWPC, thereby satisfying the trigger logic. In the data analysis, only those tracks which had wires hit in both vertical and horizontal planes of the first three chambers were considered.

Of the remaining events, $\sim 1.4 \times 10^5$ or 4% of 3.6 million triggers were rejected because at least one plane in one of the MWPC's had more

than 8 wires hit. These shower events would have given rise to many false tracks and, consequently, would have been difficult to interpret. For the remaining $1 \times 10^5$ candidates for 2-or-more-body decays of $L^{\circ}$'s, linear continuations of the tracks were searched for in the horizontal wires of the three chambers behind the analyzing magnet. After this was done, track continuations in the horizontal plane were searched for. Since the magnet deflected particles horizontally, the tracks were first extrapolated in the horizontal plane to the middle of the magnet. Then, all possible track continuations making use of at least one verticle wire in any of the last three MWPC's were found. Since many one-point continuations were constructed, the analysis proceeded only for those events in which at least one of the tracks used two vertical wires in the chambers after the magnet. This track would then be paired with all other tracks which balanced the charge, even if these latter tracks had only one-point continuations.

B. Requirements for 2-or-More-Body L° Decays

For every such track pair in an event, invariant masses were calculated for three assumptions: both particles were $\pi$'s; the positively-charged particle was p and the other was $\pi^-$; the positively charged particle was $\pi^+$ and the other was $\bar{p}$. These conditions would identify the presence of a decaying $K^\circ_S$, $\Lambda^\circ$, or $\bar{\Lambda}^\circ$, respectively, in any of the track pairs. An event in which none of the available pairs could be identified as one of these particles was tagged as a unknown. Such events would be subjected to analysis later in which other particle identifications for the charged tracks were assumed and "bumps" were searched for on invariant mass plots.

From data showing the presence of $K^\circ_S$, $\Lambda^\circ$, and $\bar{\Lambda}^\circ$, in the beam when the sweeping magnet was unplugged, the root-mean-square mass resolution was 10 MeV/$c^2$ for $\Lambda^\circ$ and 26 MeV/$c^2$ for $K^\circ_S$. These values were found to be consistent with that expected for a spectrometer in which the wire-spacing in the MWPC's was 0.2 cm [ 94]. Any track pair whose $\pi\pi$ mass lay within ± 35 MeV/$c^2$ of the known mass 497.7 MeV/$c^2$ [ 3 ] was identified as $K^\circ_S$; any track pair yielding a $\pi^- p$ ($\pi^+ \bar{p}$) invariant mass lying within ± 50 MeV/$c^2$ of the mass 1115.6 MeV/$c^2$ [ 3 ] was called $\Lambda^\circ$ ($\bar{\Lambda}^\circ$). Furthermore, any $\Lambda^\circ$ ($\bar{\Lambda}^\circ$) event in which the momentum of the p($\bar{p}$) was greater than that of the $\pi$ was tagged for further inspection. Although such events are kinematically possible if the Lorentz factor $\gamma$ of $\Lambda^\circ$ ($\bar{\Lambda}^\circ$) is $\lesssim 1.04$, it was unlikely that they would be detected in the spectrometer since the acceptance falls rapidly for $\gamma < 20$. Indeed, in data collected with the sweeping magnet unplugged 19823 $\Lambda^\circ$'s and 2253 $\Lambda^\circ$'s

along with 8305 $K^\circ_S$'s and 12061 events ambiguous between $\Lambda^\circ$ ($\bar{\Lambda}^\circ$) and $K^\circ_S$ were identified, but no anomalous $\Lambda^\circ$ ($\bar{\Lambda}^\circ$) decays were found. No attempt was made to use the Čerenkov data to resolve p's ($\bar{p}$'s) from $\pi$'s and to break the identification ambiguity in events where a $K^\circ_S$ mass and a $\Lambda^\circ$ ($\bar{\Lambda}^\circ$) mass were found.

From the analysis of $\Lambda^\circ \rightarrow p^+ + \pi^-$, $\bar{\Lambda}^\circ \rightarrow p^- + \pi^+$, and $K^\circ_S \rightarrow \pi^+ + \pi^-$ decays with the computer, it was found that in more than 96% of these events the distance of closest approach between the two charged tracks was less than 0.3 cm. In the analysis of the beamdump data, this criterion was demanded of possible $L^\circ$ decays.

The $\Lambda^\circ$, $\bar{\Lambda}^\circ$, and $K^\circ_S$ data also contained many unknown events whose origin coincided with the window ends and walls of the evacuated decay pipe. Such events were due to interactions initiated by hadrons and photons passing through the unplugged collimator. Candidates for $L^\circ$ decays were accepted only if their vertices lay in a region sufficiently removed from the walls and ends of the pipe to guarantee little contamination from this source. Although the vacuum pipe extended from Z = 332.7 cm to 1251.0 cm and had a radius of 18.0 cm, the allowed decay region extended from Z = 350.0 to 1175.0 and had a radius of 16.0 cm.

C. Analysis of Multi-Track Events

Of the 1 X $10^5$ candidates for 2-or-more-body decays of L°'s, most were actually single track events in which hits were recorded for 2 or 3 adjacent wires in the first three MWPC's. In order not to lose closely-spaced particle trajectories, the program found several track-fits, whereas in reality a single muon had passed equidistantly between two wires or there had been cross-talk between the amplifiers of neighboring wires. In the analysis of the beamdump data, 594 $\Lambda°$'s, 71 $\bar{\Lambda}°$'s, 283 $K°_S$'s, 569 events ambiguous between $\Lambda°$ ($\bar{\Lambda}°$) and $K°_S$, and 152 unknown events were found to have satisfied all the requirements listed above. The content of the data sample is summarized in Table 3.

In Figure 5a, the invariant mass spectra for the $K°_S$ events is given. This plot includes the unknown events as well, where it has been assumed, of course, that the decay particles are $\pi^+$ and $\pi^-$. Similarly, the invariant masses of $\Lambda°$ and unknowns are displayed in Figure 5b. The identification of these events as $K°_S$ and $\Lambda°$ is confirmed further by the distributions of transverse momenta given in Figure 6. The first peak corresponds to $\Lambda°$ and $\bar{\Lambda}°$ decays because the maximum transverse momentum that the $\pi$ or p can have is limited to Pmax $\leq$ 100 MeV/c [ 3 ]. Similarly, the second peak corresponds to $K°_S$ since Pmax $\leq$ 206 MeV/c for either pion of this decay [ 3 ]. We may understand the shapes of these distributions if we let $\theta$ be the angle between the trajectory of any of the decay particles and the direction vector of the parent particle in its center-of-mass frame. Then, $P_T$ = Pmax sin $\theta$. If we assume that the parent particles do not have significant polarization, then one

TABLE 3

The Data Sample: Types and Numbers of Events

| | Type | Number of Events |
|---|---|---|
| A. | Total number of events in data sample | $3.58 \times 10^6$ |
| B. | No tracks found in first three MWPC's | $2.3 \times 10^6$ |
| C. | Event with $\geq 8$ wires in one plane of any MWPC | $0.14 \times 10^6$ |
| D. | One track in first 3 MWPC's | $1.1 \times 10^6$ |
| E. | More than one track-fit found in first three MWPC's | $0.1 \times 10^5$ |
| F. | $K^\circ_S$ decays | 283 |
| G. | $\Lambda$ decays | 594 |
| H. | $\bar{\Lambda}$ decays | 71 |
| I. | $\Lambda - K^\circ_S$ ambiguous decays | 569 |
| J. | "Unknown" events found in preliminary analysis | 152 |
| K. | Valid "unknown" events found in final analysis which are believed to be $K^\circ_L$ decays | 2 |
| L. | Events in final analysis which may be interpreted as $L^\circ$ decays | 0 |

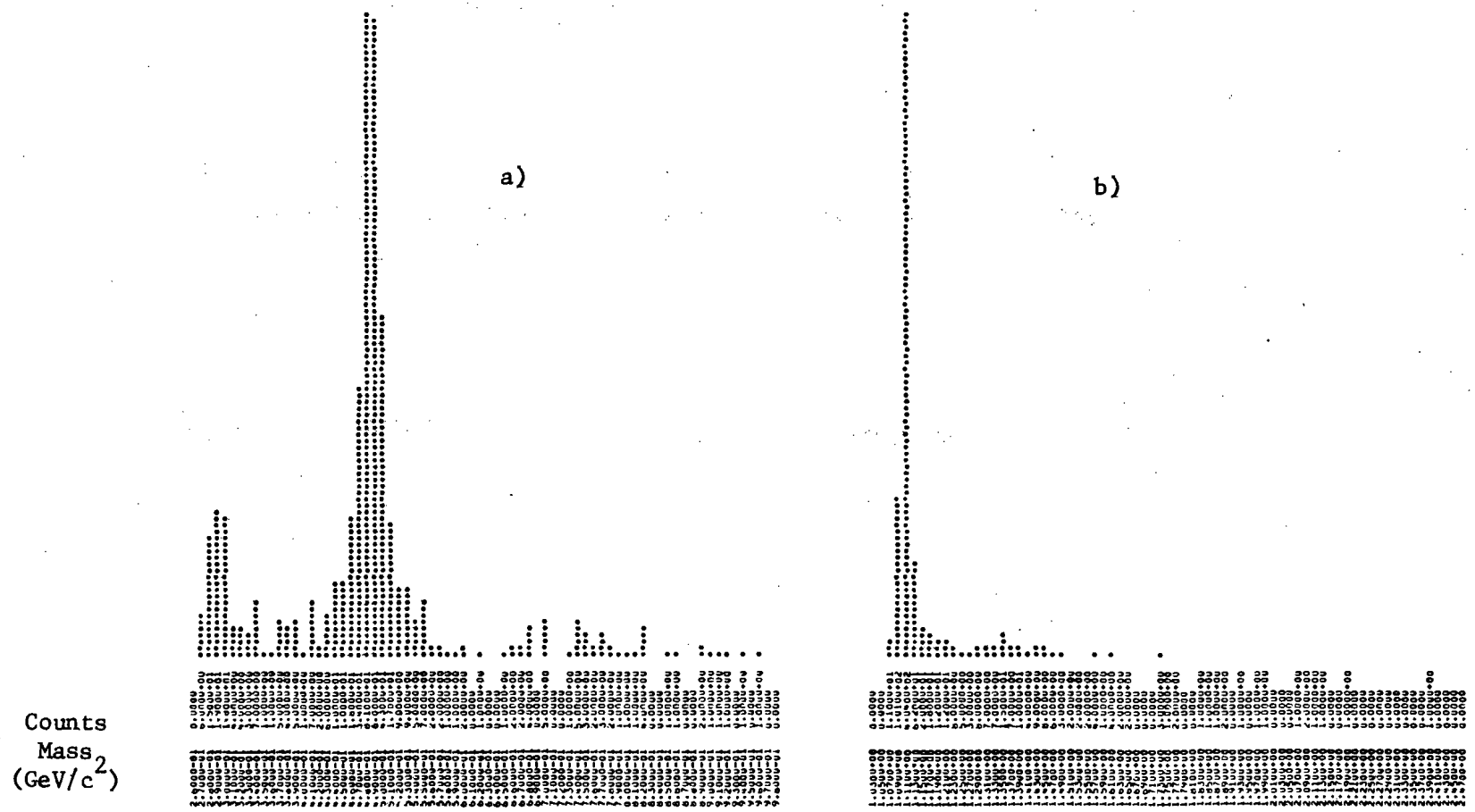


Figure 5. Invariant masses of events found in the preliminary analysis: a) $K^\circ_S$ and unknown events assuming particles are $\pi^+$ and $\pi^-$, b) $\Lambda^\circ$ and unknown events assuming particles are p and $\pi$.

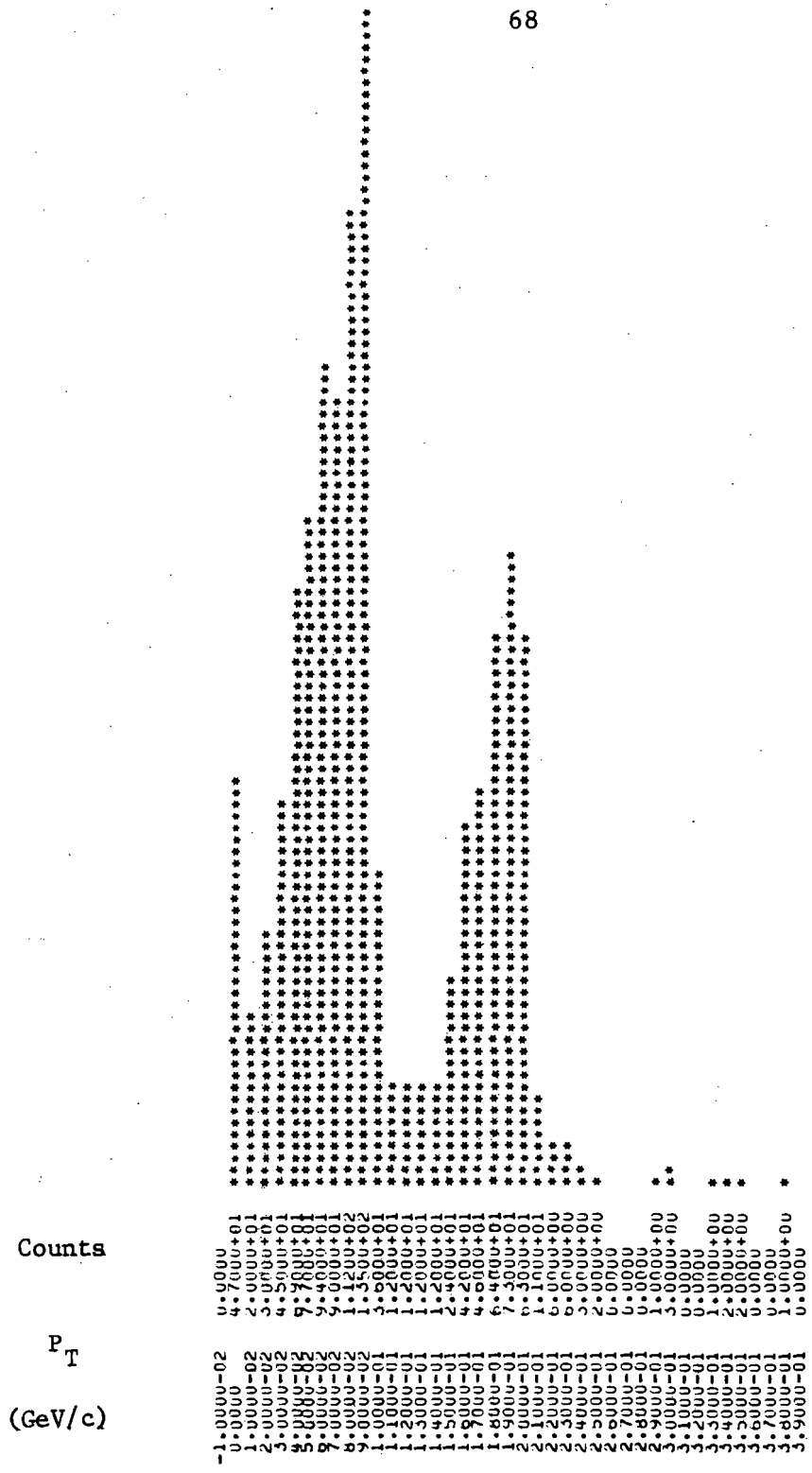


Figure 6. Transverse momentum of all decay particles found in the preliminary analysis. If $\vec{P}_1$ and $\vec{P}_2$ are the momentum vectors of the decay particles, then $P_T = |\vec{P}_1 \times \vec{P}_2| / |\vec{P}_1 + \vec{P}_2|$.

expects to observe a transverse momentum distribution $N(P_T)$ whose shape varies as $N(P_T) = P_T/(Pmax^2 - P_T^2)^{1/2}$. The data appears to reflect such a prediction.

What is the origin of thes $K^\circ_S$, $\Lambda^\circ$, and $\bar{\Lambda}^\circ$ events, whose number is far in excess of the backgrounds predicted in the first section of Chapter III? The momentum distributions shown in Figure 7 and the relative numbers of these $\Lambda^\circ$, $\bar{\Lambda}^\circ$, and $K^\circ_S$ events coincide with those found earlier with the sweeping magnet unplugged. Indeed, when the trajectories of these strange particles are extrapolated to the downstream face of the beamdump, 99% of these intersections mapped out the edges of a previously unsuspected channel which ran the full length of the magnet. This is illustrated in Figure 8 where less than one-thirtieth of all the events which extrapolated into the channel have been shown. The remaining 1% of all track intersections, or 18 events, correlate strongly with other gaps known to extend through the magnet, in particular, the spaces along the upper and lower edges of the brass collimator blocks. A fiducial cut on the channel was imposed to eliminate most of these strange particles. This cut would remove 60% of the unknown events with only a 5% loss in acceptance to the decays of neutral heavy leptons.

Close examination of all 152 unknown events indicated a number of necessary improvements for the analysis program. In particular, the care taken thus far in not discarding different track-fits to the same charged particle trajectory was creating an undesirable situation. Track-fits which were inferior in the values of $\chi^2$ or in the number of chambers used were accidentally satisfying requirements which the superior track-fits were rejected by. For example, while the superior

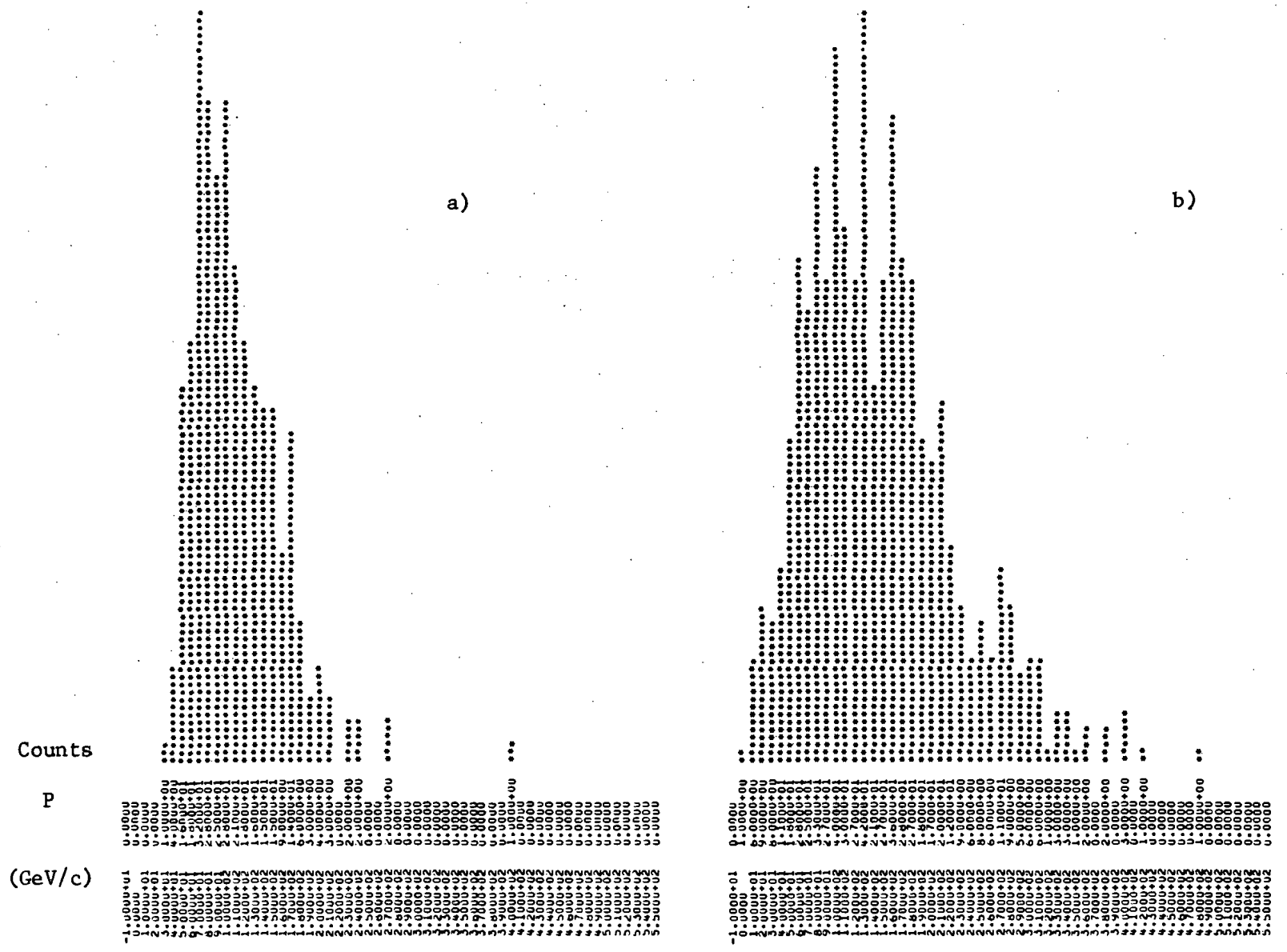


Figure 7. Momentum along the beam-axis of a) $K^{\circ}_{S}$ and b) $\Lambda^{\circ}$ events found in the preliminary analysis.

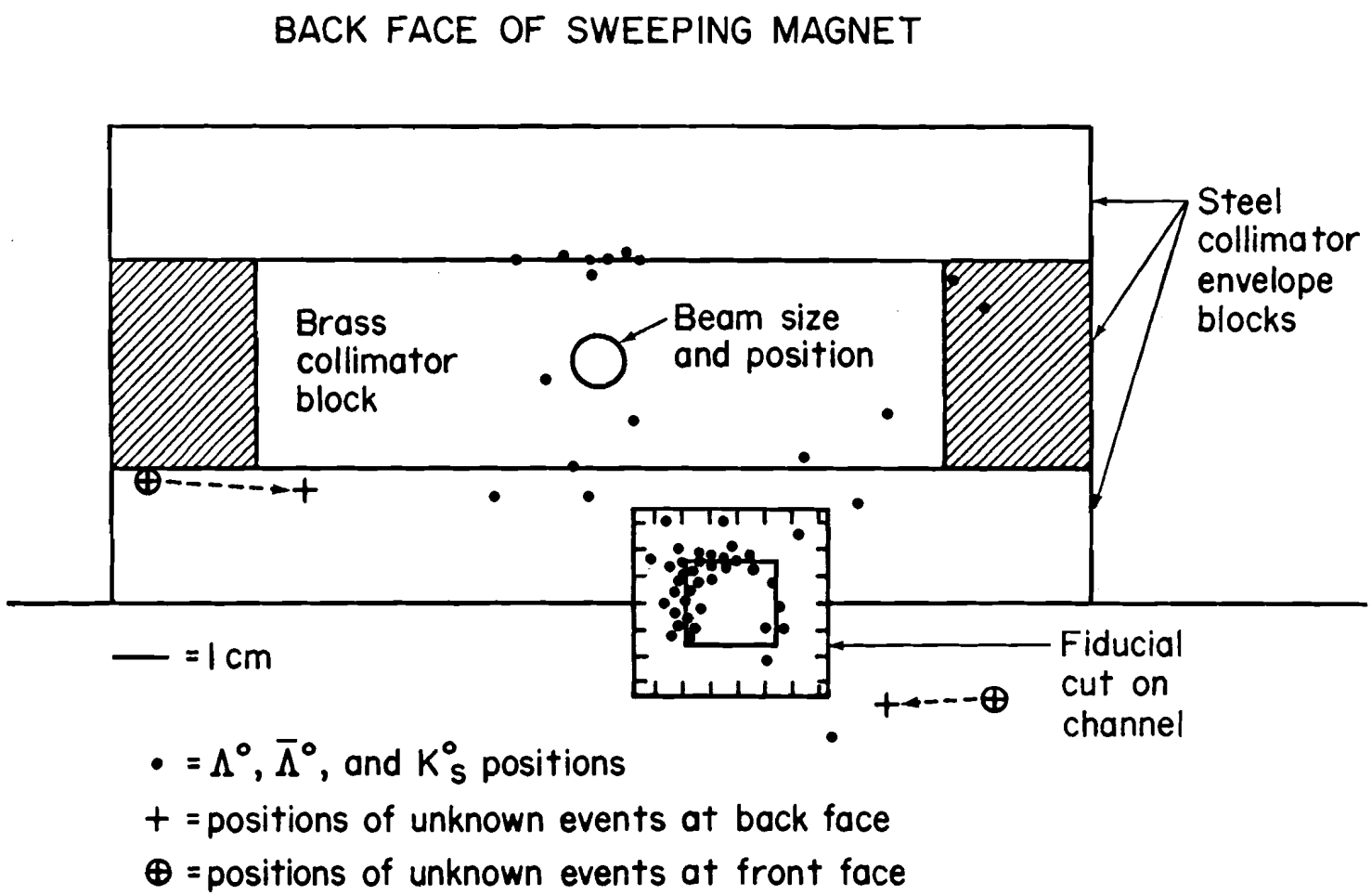


Figure 8. Intersections of the trajectories of neutral parent particles with the backface of the beamdump magnet.

track-fits would have vertex positions lying outside the allowed region in the decay volume or would extrapolate into the fiducial cut on the unplugged channel, the poorer track-fits would satisfy these cuts. Accordingly, the program was modified to reject any track-fit whose $\chi^2$ per degree of freedom in either horizontal or vertical planes exceeded that for the 99% confidence level. Moreover, of two track-fits which used the same 5 or 6 wires in the first three chambers, the program rejected that track which used fewer wires in the last three chambers or had a poorer $\chi^2$. Computer code was written also to guarantee that if a track-fit extrapolated in one plane to a position outside of a MWPC, the program would not make use of a hit wire to complete the track in the other plane of that chamber.

The revised program was tested and found to lose less than 1% of the $\Lambda^\circ$, $\bar{\Lambda}^\circ$, and $K^\circ_S$ events. However, when the fiducial cut was imposed, the program reduced the number of unknown events from 152 to 2 [ 95 ]. The characteristics of these events are given in Table 4.

TABLE 4

Characteristics of the Two Unknown Events

| | Characteristic | | Event 1 | Event 2 |
|---|---|---|---|---|
| A. | Total momentum (GeV/c) | | 25.24 | 32.10 |
| B. | Momentum $P_1$ ($P_2$) of the +(-) charged particle (GeV/c) | | 10.0 (15.2) | 22.5 (9.6) |
| C. | $P_T = \lvert \underset{\sim}{P}_1 \times \underset{\sim}{P}_2 \rvert / \lvert (\underset{\sim}{P}_1 + \underset{\sim}{P}_2) \rvert$ (MeV/c) | | 35 | 98 |
| D. | Opening angle $\theta$ (mr) where $\cos\theta = \underset{\sim}{P}_1 \cdot \underset{\sim}{P}_2 / \lvert \underset{\sim}{P}_1 + \underset{\sim}{P}_2 \rvert$ | | 5.8 | 14.6 |
| E. | $\pi^+\pi^-$ invariant mass (MeV/$c^2$) | | 294 | 372 |
| F. | $p\,\pi^-$ invariant mass (MeV/$c^2$) | | 1230 | 1169 |
| G. | $\pi^+\,\bar{p}$ invariant mass (MeV/$c^2$) | | 1502 | 1737 |
| H. | Origin * of decay vertex (cm) | X | 0.82 | 0.81 |
| | | Y | -2.77 | -5.83 |
| | | Z | 1074.60 | 1026.69 |
| I. | Intersection of parent trace | X | -5.38 | 5.19 |
| | with backface of beamdump | Y | -2.44 | -6.29 |
| | magnet (cm) | Z | 0.0 | 0.0 |
| J. | Intersection of parent track | X | -8.49 | 7.50 |
| | with frontface of beamdump | Y | -2.27 | -6.53 |
| | magnet (cm) | Z | -540.0 | -540.0 |

TABLE 4 (Continued)

| Characteristic | Event 1 | Event 2 |
|---|---|---|
| K. Momentum of neutral decay particle needed for parent to originate in unplugged channel (MeV/c) | 146 | 132 |

* Fiducial cut on decay volume included all events with $\sqrt{x^2 + y^2} \leq 16.0$ cm and $350.0 \leq Z \leq 1175.0$ cm.

D. Interpretation and Elimination of Background Events

In a beam of $K^\circ$ mesons, 50% of the particles will decay as $K^\circ_S$ via the dominant modes $K^\circ_S \rightarrow \pi^+ + \pi^-$ (69%) and $\pi^\circ + \pi^\circ$ (31%) with a lifetime of $0.89 \times 10^{-10}$ seconds [ 3 ]. The remaining 50% will decay as $K^\circ_L$ via the primary modes $K^\circ_L \rightarrow \pi + e + \nu$ (39%), $\pi + \mu + \nu$ (27%), $\pi^+ + \pi^- + \pi^\circ$ (12%), and $\pi^\circ + \pi^\circ + \pi^\circ$ (21%) with a lifetime of $5.181 \times 10^{-8}$ seconds [ 3 ]. The presence of a substantial number $K^\circ_S$ decays in the beamdump data indicates that the 2 unknown events might be $K^\circ_L$ decays.

An estimate of the number of $K^\circ_L$ decays which would have been detected is straight-forward to make. Correcting the observed number of $K^\circ_S$ decays for the fact that not all decays are charged, and correcting the observed momentum distribution shown in Figure 7 for the probability that $K^\circ_S$ of a certain momentum decays in the vacuum pipe, the expected number and momentum distribution of $K^\circ_L$'s in the beam is determined. When this distribution is folded with the probability of a $K^\circ_L$ decay in the pipe and multiplied by the percentage of charged decays, it is found that 2.4 $K^\circ_L$ decays would have been detected. Moreover, because the $K^\circ$ energy distribution peaks at 80 GeV and the probability of an observable $K^\circ_L$ decay varies approximately with the inverse of its energy, one would expect these events to have less than 60 GeV. Indeed, their energies were 25.2 and 32.1 GeV.

In a 3-body $K^\circ_L$ decay, the maximum momentum that a particle can acquire in any of the three charged final states discussed above is limited to $229 MeV/c^2$ in the $\pi + e + \nu$ channel [ 3 ]. The values of $P_T$ given in Table 4 clearly do not violate this limit. Further support

to the $K^{\circ}_{L}$ interpretation of these events comes from a calculation of the momentum which must be added to that of the charged particles in order that the parent particle trajectory point back to its presumed origin at the edge of the unplugged channel in the sweeping magnet. This missing momentum, taken away by a $\nu$ or $\pi^{\circ}$ in $K^{\circ}_{L}$ decay is 146 MeV/c for the first event and 132 MeV/c for the second.

If neutral heavy leptons are created directly in proton-nucleon collisions, then the total momentum vector of the two-body decay of an $L^{\circ}$ must extrapolate back to a localized region about the beam axis near the front face of the magnetized beamdump. Even if $L^{\circ}$'s are made in proton-nucleon collisions primarily from the decays of heavier leptons or hadrons, this will also be true as long as the decay is rapid. The beam diameter was measured to be less than 1 cm. As Figure 8 indicates, the resolution with which $\Lambda^{\circ}$, $\bar{\Lambda}^{\circ}$, and $K^{\circ}_{S}$ tracks can be traced to cracks at the backface of the magnet is 0.4 cm. Tracing the tracks of the 2 unknown events to the frontface of the magnet, their extrapolated positions are found to lie further than 8 cm off the beam-axis. On this basis, the 2 events can be excluded as the decays of $L^{\circ}$'s into two charged particles.

# CHAPTER V

# EXPERIMENTAL RESULTS

## A. Spectrometer Acceptance

As discussed in Chapter II-C, the observation of $e^{\pm}(\mu^{\pm}) + \pi^{\mp}$ events would be a compelling signature for a neutral heavy lepton of mass $\leq 2$ GeV/$c^2$. The detection efficiency $\varepsilon$ of the spectrometer for detecting $L^\circ \rightarrow e(\mu) + \pi$ decays in the vacuum pipe can be computed by $\varepsilon\ (m_{L^\circ}, \tau_{L^\circ}, \gamma, p_T) = \exp\ (-\ell/\lambda) \int_0^T \exp(-z/\lambda)\ \phi\ (m_{L^\circ}, \gamma, p_T, z)\ dz/\lambda$. Here, $\ell = 8.9$ m is the distance between the creation point of the neutral heavy lepton at the frontface of the beamdump and the start of the allowed decay region of length $T = 9.2$ m. $\lambda$ is defined to be $\gamma\beta c\tau_{L^\circ}$ and $p_T$ is the transverse momentum of the $L^\circ$ with respect to the beam-axis. Given that an $L^\circ$ of definite mass, Lorentz factor, and transverse momentum decays at a position z in the allowed volume, $\phi$ is the probability that the $e(\mu)$ and $\pi$ tracks pass through the aperture of the first three MWPC's, the analyzing magnet, and at least two of the last three MWPC's.

The acceptance is evaluated as a function of these parameters by a Monte Carlo program which assumes that the $L^\circ$ is produced with no polarization and therefore its decay is isotropic. For various $L^\circ$ masses, Figure 9 shows the acceptance for the decay $L^\circ \rightarrow \mu + \pi$ as a function of $L^\circ$ lifetime. For the decay $L^\circ \rightarrow e + \pi$, the acceptance is only 5% lower. It is assumed that the $L^\circ$'s are created with zero transverse momentum with respect to the proton beam and with Feynman variable $x = P_{\parallel}^{cm} / P_{max}^{cm} = 0.2$. Here $P_{\parallel}^{cm}$ is the longitudinal momentum

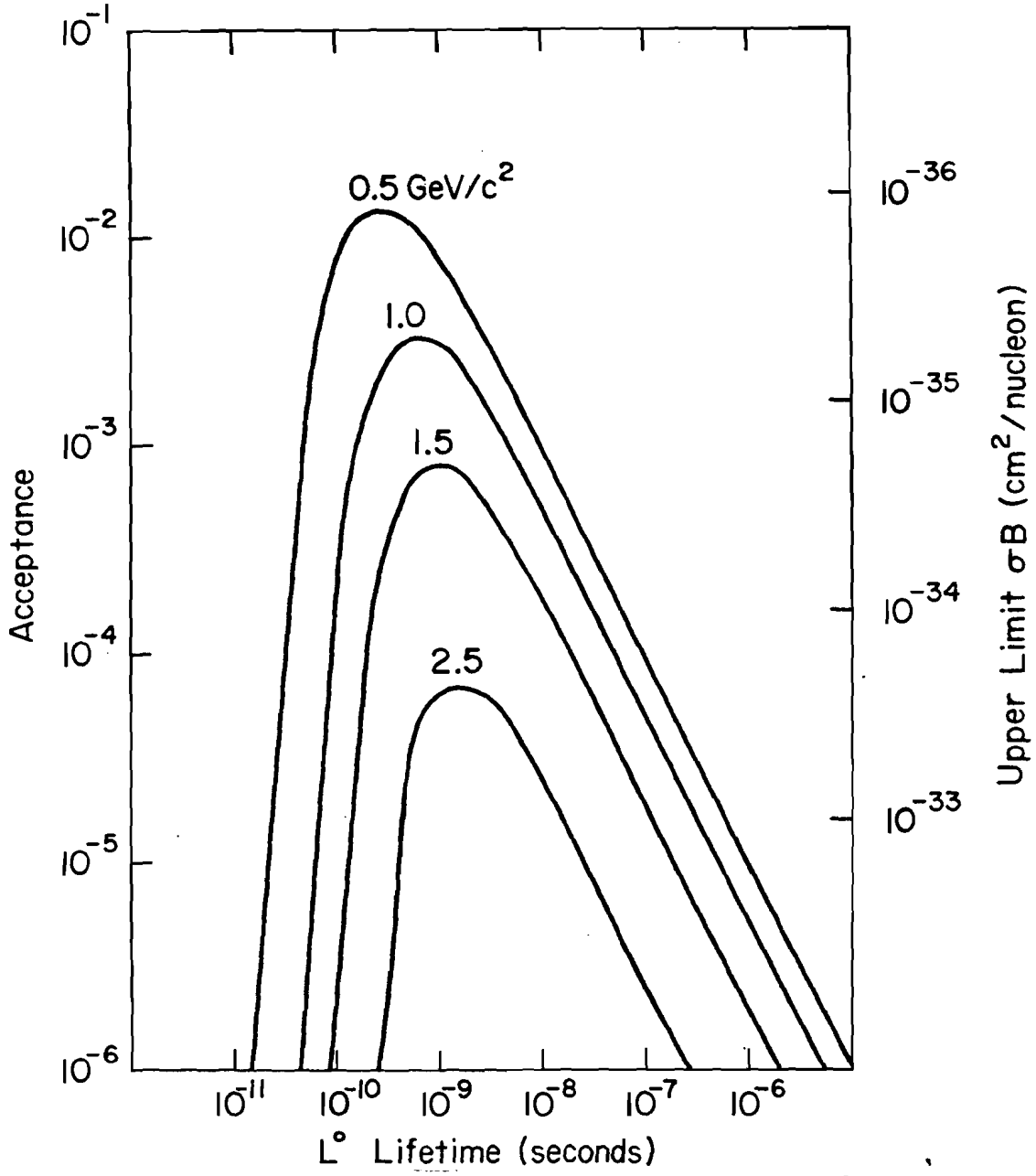


Figure 9. Acceptance of the spectrometer for the decay $L^\circ \to \mu + \pi$ as a function of $\tau_{L^\circ}$ and $m_{L^\circ}$. The $L^\circ$ is assumed to have been created with $x = 0.2$ and no transverse momentum. The right-hand scale gives our measurement of the upper limit at the 90% confidence level on the cross-section for the production of $L^\circ$'s with $x \gtrsim 0.2$ and $\theta_{lab} \lesssim 10$ mr and their subsequent decay with branching ratio B into 2 charged particles.

of the L° in the center-of-mass frame of the proton beam and the beam-dump, and $P_{max}^{cm}$ is the maximum momentum of the L° in this frame. For x = 0.2, the momenta in the laboratory are 81, 83, 85, and 94 GeV/c for L°'s of mass 0.5, 1.0, 1.5, and 2.5 GeV/$c^2$ [ 96].

The apertures of the decay pipe, MWPC's, and analyzing magnet limit the sensitivity to neutral heavy leptons which are produced with $\theta_{lab} \leq 10$ mr with respect to the beam-line axis. This limitation is due primarily to the requirement that the decay occurs within the vacuum pipe. The restriction on $\theta_{lab}$ is derived from the fact that the radius of the decay must be less than 16.0 cm off the beam-axis and that the end of the allowed decay region lies 18.1 meters downstream of the frontface of the beamdump magnet. These same apertures impose a condition on the $\gamma$ of the L° as well. If we assume that the L° decays into two particles whose masses are negligible, and that in the center-of-mass of the L° these particles come out perpendicular to the direction of motion of the L°, then the opening angle of the event is $2/\gamma$. If the L° decay occurs along the beam-axis at the front of the vacuum pipe, then the acceptance will begin to fall for $2/\gamma < 0.011$ or $\gamma < 185$. This is because the distance from the L° decay to the backface of the superconducting analyzing magnet is 1845 cm and the height of the magnet aperture is 20 cm. If the L° is created with non-zero transverse momentum so that it decays off the beam-axis, then the acceptance of the spectrometer will be further reduced. In Figures 10 and 11, the acceptance for L°'s of mass 0.5 and 1.5 GeV/$c^2$, respectively, is presented as a function of x and $p_T$. The maximum acceptance for L°'s

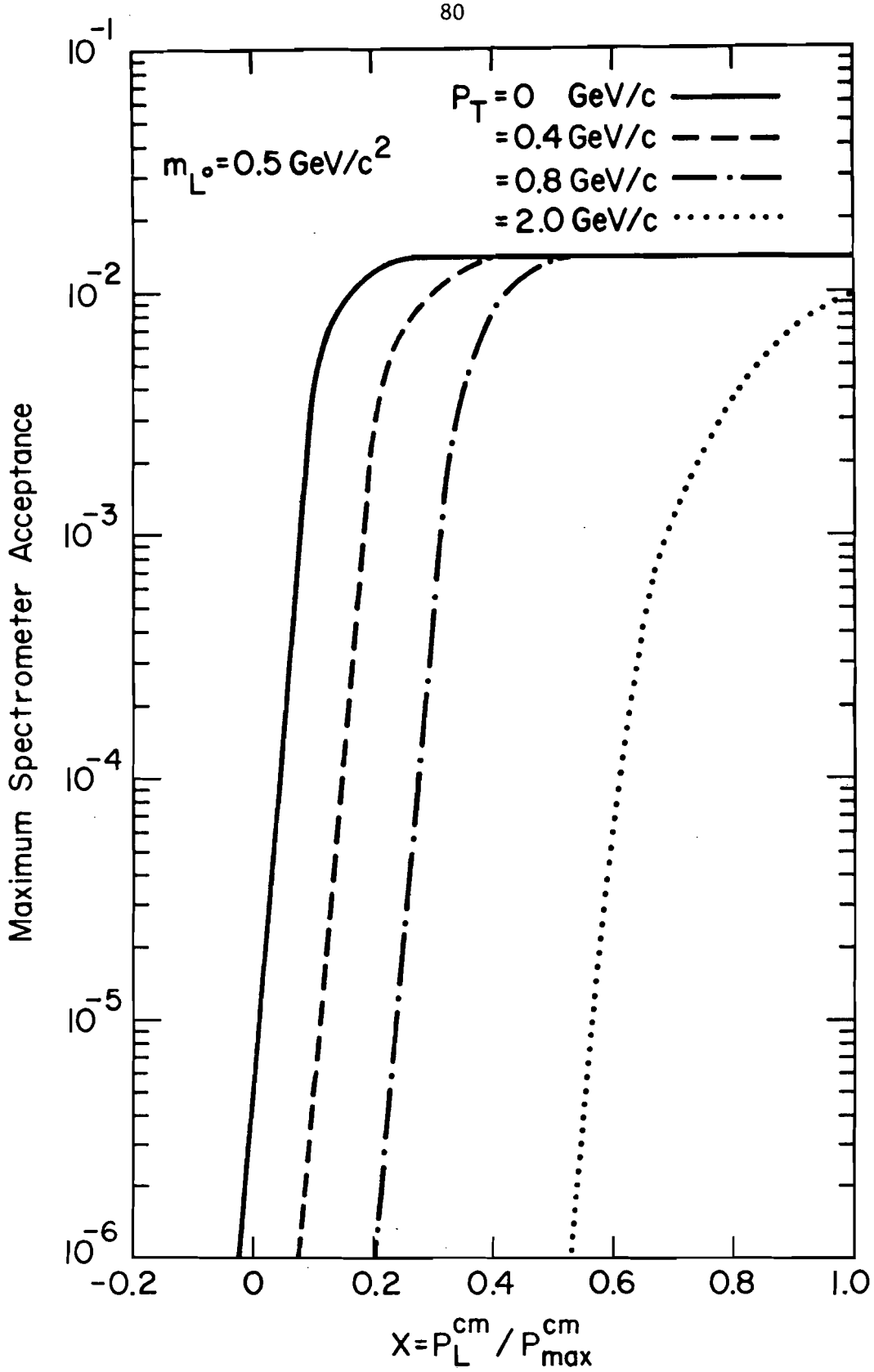


Figure 10. Maximum acceptance of the spectrometer for the decay $L^\circ \rightarrow \mu + \pi$ for $m_{L^\circ} = 0.5$ GeV/$c^2$ as a function of x and $P_T$.

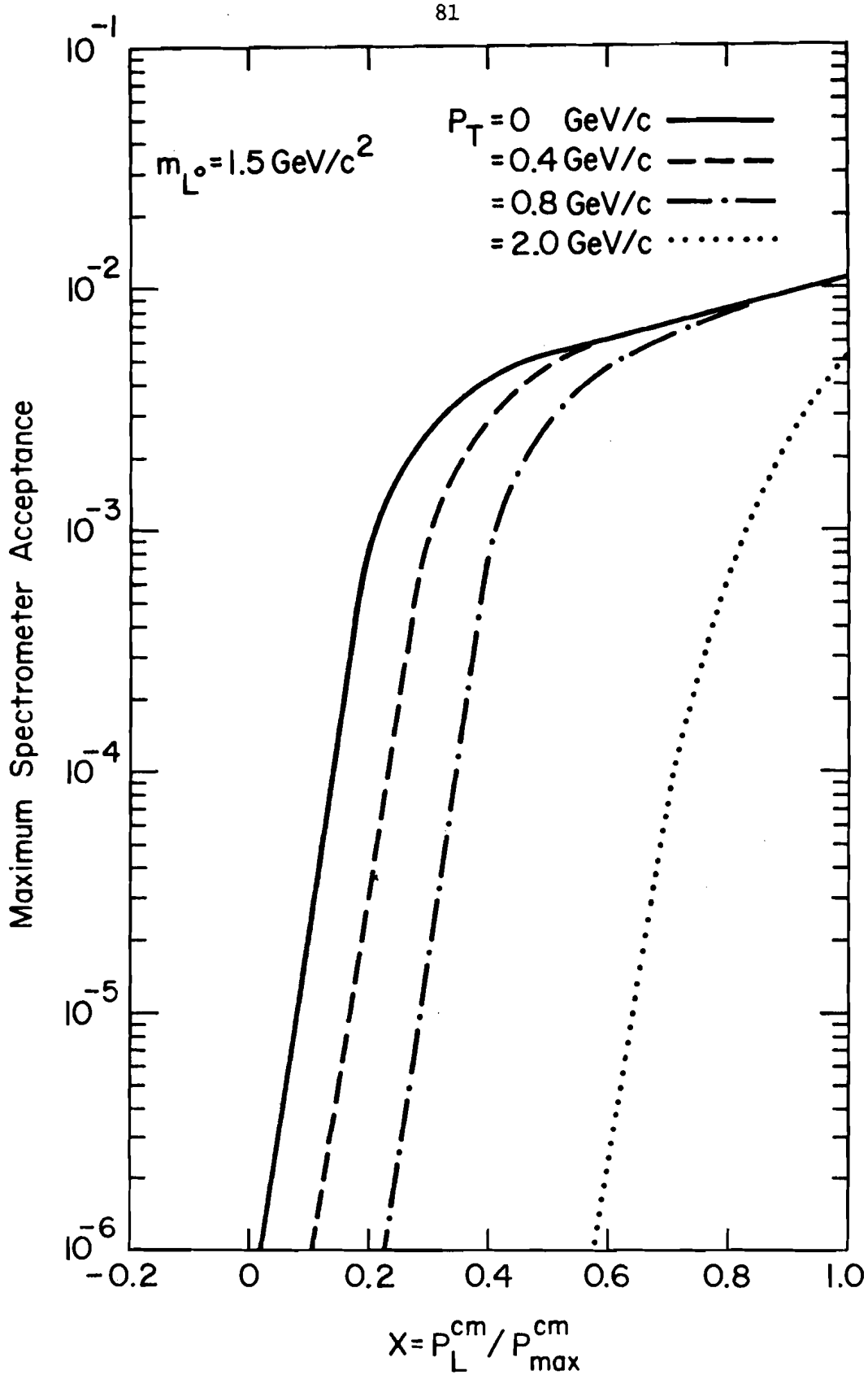


Figure 11. Maximum acceptance of the spectrometer for the decay $L^\circ \rightarrow \mu + \pi$ for $m_{L^\circ} = 1.5\ GeV/c^2$ as a function of x and $P_T$.

of mass $\leq 0.5$ GeV/$c^2$ is constant to within 30% at $1.4 \times 10^{-2}$ for $+0.2 \leq x \leq +1.0$ at $p_T = 0$ and for $+0.5 \leq x \leq +1.0$ at $p_T = 1$ GeV/c.

## B. Upper Limit on $\sigma B$

To arrive at an upper limit to the cross-section $\sigma$ for producing long-lived $L^\circ$'s which decay with branching ratio B into 2 charged particles and which cannot be identified with $\Lambda^\circ$, $\bar{\Lambda}^\circ$, or $K^\circ_S$, the percentage of data lost in the collection and in the analysis must be considered.

During the data-taking, the "live-time" of the equipment was reduced by the substantial muon trigger rate to only 22%, thus lowering the sensitivity by a factor of 4.5. Since the counters set up to detect charged particles vetoed the trigger electronics during $2 \times 10^6$ buckets of protons every spill, an additional 4% of any $L^\circ$ signal was lost because the total number of buckets per spill is $50 \times 10^6$. Because several wires in each MWPC were dead, the inefficiency of all the chambers together was about 4%.

In the data analysis, 4% of all events were rejected because they were showers. The requirements used in analyzing multi-track events lost another 4% of the data. Finally, the fiducial cut on the unplugged channel in the sweeping magnet reduced the acceptance by 5%. Putting together all the loss factors of the last two paragraphs, one finds that the fraction of $L^\circ$ decays that survived the data collection and analysis is $F = 0.17$.

The number $N_{L^\circ}$ of $L^\circ$'s produced that would have been detected is given by $N_{L^\circ} = N_P \, \sigma \, B\epsilon F/\sigma_{pN}$ where $N_p = 2.8 \times 10^{13}$ is the total number of 400 GeV/c protons targetted upon the beamdump. $\sigma$ is the $L^\circ$ production cross-section per incident proton, and $\sigma_{pN} = 40$ mb is the cross-section for proton-nucleon collisions at 400 GeV/c [ 3 ]. The production of the

$L^\circ$ is assumed to occur in this primary interaction and not in the accompanying shower. For $L^\circ$ masses less than 1 GeV/$c^2$, the minimal acceptance is $5 \times 10^{-4}$ in the lifetime range between $10^{-10}$ and $10^{-8}$ seconds. The upper limit on the cross-section for the production of $L^\circ$'s with $x \gtrsim +0.2$ and $\theta_{lab} \lesssim 10$ mr and their subsequent decay with branching ratio B into two charged particles is $\sigma B \leq 3.9 \times 10^{-35}$ $cm^2$/nucleon at the 90% confidence level for the mass range less than 1.0 GeV/$c^2$ and the lifetime range between $10^{-10}$ and $10^{-8}$ seconds [ 97 ]. This upper limit applies to the production of neutral heavy leptons unaccompanied by muons of momentum $\geq$ 10 GeV/c, which would have vetoed the event. Moreover, the invariant mass of the two particles must not be identical to that of $\Lambda^\circ$ or $K^\circ_S$.

# CHAPTER VI

# DISCUSSION OF RESULTS

## A. Introductory Remarks

In the last chapter, an upper limit on the cross-section for the production and decay of neutral heavy leptons was derived. The result quoted is model-independent: it was derived solely on the basis of the spectrometer acceptance without regard to any particular production mechanism for $L^{\circ}$'s. In the present chapter, I will present several models which may lead to the creation of $L^{\circ}$'s. For each process, the number of events that could have been detected will be computed.

B. Sensitivity to L°'s Arising From $\tau^+\tau^-$ Decays

Neutral heavy leptons L° may be produced in the decay of heavier charged leptons $L^{\pm}$ via the modes $L^- \rightarrow L^\circ + X^-$, $L^+ \rightarrow \bar{L}^\circ + Y^+$ where $X,Y = (e, \nu_e)$, $(\mu,\nu_\mu)$, or hadrons. In turn, the $L^+L^-$ pairs may be produced by the Drell-Yan mechanism, which has been mentioned earlier. In this section, I describe a detailed calculation of this process, where I assume that the $L^{\pm}$ is identical to the $\tau^{\pm}$ [ 98]. In Figure 10, one possible scenario for this method of producing neutral heavy leptons is depicted. I consider the mass of the L° to be in the range 0.3 to 0.6 GeV/$c^2$, which is consistent with early mass limits on the L° [10 ]. On the basis of the equation presented in Chapter II-C, these masses correspond to lifetimes in the range $5.1 \times 10^{-11}$ to $1.6 \times 10^{-9}$ seconds. This is, in fact, the very same range of masses and lifetimes for which the experiment was most sensitive.

The attractiveness of the above model, has faded, however, as more data on the $\tau$ and its neutral companion has been collected and published. After this calculation was completed, it was learned that the upper limit on the mass of the neutral particle associated with the $\tau$ had been reduced to $m_{L^\circ} \lesssim 250$ MeV/$c^2$ [ 47 ]. Although this may make decays such as $L^\circ \rightarrow \mu^{\pm} + \pi^{\mp}$ unlikely, if not impossible, it does not rule out $L^\circ \rightarrow e^{\pm} + \pi^{\mp}$. On the other hand, the growing evidence that ($\tau^-$, L°) form a pair of sequential leptons and that there is a conserved "tau-number", argues against the occurrence of such decays. Even if the L° does decay for some unexpected reason, its lifetime most likely would be many orders of magnitude longer than $10^{-9}$ seconds. Consequently,

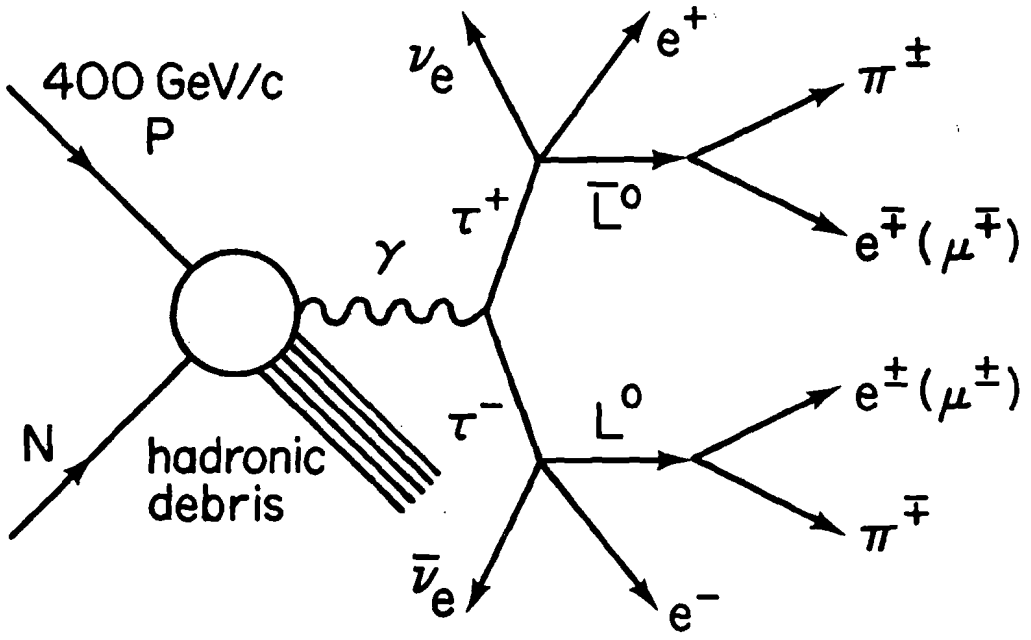


Figure 12. Production of $L^\circ$ and $\bar{L}^\circ$ from the decay of $\tau^-$ and $\tau^+$ leptons created by the Drell-Yan mechanism.

its detection in this experiment would have been even less probable.

Nevertheless, since the experimental lower limit on the $L^\circ$ lifetime is probably $\sim 10^{-9}$ seconds as determined by the non-observation of its decay in $e^+e^-$ annihilation experiments, we may regard the $L^\circ$'s lifetime as an open question. The observation of $\tau$ production in bubble chambers would constitute compelling evidence that the $L^\circ$'s were very long-lived. On the other hand, the lack of such observations at some theoretically predicted level might be taken as a statement that the $L^\circ$ decayed before reaching the bubble chamber.

Since the cross-section of the Drell-Yan mechanism for production of $\tau^+\tau^-$ pairs is $5 \times 10^{-35}$ $cm^2$/nucleon at the center-of-mass energy squared $s = 800$ $GeV^2$ [75], a total of $3.5 \times 10^4$ such pairs were created during the course of the experiment. To calculate how many $L^\circ$'s would have been detected requires a knowledge of the distribution in momentum and direction of the $\tau$'s in the laboratory, in other words, $d\sigma/(dm\,dx\,dQ_T^{\,2}\,d\Omega)$. A knowledge of the momenta and the directions of the $L^\circ$'s arising in $\tau$ decay will also be needed. Here, $m = \sqrt{Q^2}$ is the invariant mass of the lepton pair, $Q_T$ is the pair's transverse 3-momentum, and x is the fractional longitudinal momentum of the pair relative to the beam direction in the center-of-mass of the colliding hadrons. Finally, $d\Omega$ is the solid angle in the dilepton center-of-mass. We can find out how the $\tau^+\tau^-$ production cross-section varies with m from the $\mu^+\mu^-$ cross-section in 400 GeV/c proton-nucleon interactions which has been fit to $d\sigma/dm \sim \exp(-bm)$ where $b = 0.98 \pm 0.02$ $GeV^{-1}$ [ 32]. The dependence of the cross-section on x has been theoretically predicted [ 99]:

$d\sigma/dx \sim 1/(x^2 + c)$ provides an acceptable fit to these calculations when $c = 0.08$ and $|x| > 0.875$ are not allowed. In the center-of-mass of the lepton pair, $d\sigma/d\Omega \sim 1 + \cos^2\theta$ where $\theta$ is the angle between $\tau^-$ and the beam direction [100]. The transverse momentum of the $\tau^+\tau^-$ pair is assumed to be zero.

A Monte Carlo calculation was used to generate values of m, x, and $\theta$ with the weightings given above. From m and $\theta$, the momentum vectors of $\tau^+$ and $\tau^-$ can be calculated in the di-lepton center-of-mass. Since the velocity of the di-lepton center-of-mass depends only on x and m, it is straightforward to transform these vectors to the beam-laboratory center-of-mass and then to the laboratory frame [101]. In this way, it is found that the average momentum of each $\tau$ is 45 GeV/c and the average $\theta_{lab}$ is 44 mr.

Although the decays $\tau^+ \to \bar{L}^\circ + X^+$ and $\tau^- \to L^\circ + Y^-$ give rise to 2 neutral heavy leptons the experiment was not sensitive to $L^\circ$'s accompanied by muons. Since $\tau \to L^\circ + \mu + \nu_\mu$ has a branching ratio of $\sim 0.2$ [10], one would expect only 1.28 detectable $L^\circ$'s per $\tau$ pair. Under the assumptions that X, Y = (e, $\nu_e$) and the $\tau$'s are produced with little polarization and therefore decay isotropically, the momentum spectrum of the $L^\circ$ arising from the V-A 3-body decay of the $\tau$ is straightforward to calculate [102]. The other decay modes of the $\tau$ will give rise to $L^\circ$'s of somewhat different characteristics, but these differences are ignored here. The average laboratory momentum and $\theta_{lab}$ of the $L^\circ$ are found to vary smoothly from 17 GeV/c and 94 mr for $m_{L^\circ} = 0.3$ GeV/$c^2$ to 21 GeV/c and 74 mr for $m_{L^\circ} = 0.6$ GeV/$c^2$.

Next, the momentum and angular distribution of the $L^\circ$'s can be folded in with the acceptance $\varepsilon(m_{L^\circ}, \tau_{L^\circ}, \gamma, p_T)$ of the spectrometer for the unpolarized decay $L^\circ \rightarrow e(\mu) + \pi$, assumed to have a branching ratio of 1. In particular, the lack of sensitivity of the apparatus to $L^\circ$'s produced with $\theta_{lab} \leq 10$ mr is a severe restriction. This computation yields the maximum number of such decays that could have been detected as a function of the $L^\circ$'s mass and lifetime. Let us assume that the $L^\circ$'s lifetime is $3 \times 10^{-10}$ seconds. At this lifetime, the acceptance of the spectrometer is maximized. Then, the predicted yield of detectable $L^\circ \rightarrow e(\mu) + \pi$ decays is 7(9) for $M_{L^\circ} = 0.3$ GeV/$c^2$ and 5(6) for $M_{L^\circ} = 0.6$ GeV/$c^2$. These numbers do not include the loss of efficiency due to the computer dead-time or cuts in the off-line analysis. When this efficiency factor F = 0.17 is taken into account, the yields are reduced to 1.2(1.5) and 0.9 (1.0), respectively. Clearly, the present experiment lacked the necessary sensitivity to observe the decays of $L^\circ$'s created by this particular production mechanism.

The results of the detailed calculation performed above can be checked rapidly by a much simpler calculation. This latter computation assumes that the $L^\circ$'s are generated in the center-of-mass frame of the proton beam and the beamdump with an isotropic distribution of trajectories and an energy much greater than their rest mass energy. Of all the $L^\circ$'s generated, only those which are produced with $\theta_{lab} \leq 10$ mr can be detected. This limitation can be translated into a constraint on the angle $\theta_{cm}$ that the $L^\circ$ trajectory makes with the beam-axis in this center-of-mass frame.

If the energy and momentum of the $L^\circ$ in this frame are E and p, then $\tan\theta_{lab} = p \sin\theta_{cm}/(\gamma(p\cos\theta_{cm} + \beta E))$ where $\beta \sim 1$ and $\gamma = 14.6$ are the velocity and the Lorentz factor of this frame relative to the lab frame. Making the assumption $p \simeq E >> m_{L^\circ}$, one finds that $\theta_{lab} \lesssim 10$ mr corresponds to $\theta_{cm} \lesssim 290$ mr in the forward hemisphere, or in other words, only 2% of the total solid angle in the center-of-mass frame. Thus, the detailed calculation presented above simply says that $(3.5 \times 10^4) \times (1.28) \times (2\%) \times (1.4 \times 10^{-2}) \times (0.17) = 2.1$ $L^\circ$ decays could have been detected. Here, the factor $1.4 \times 10^{-2}$ is the maximum sensitivity of the detector as is seen in Figures 9 and 10.

If charged leptons heavier than the $\tau$ exist, these might decay into neutral heavy leptons which could have been detected. However, the Drell-Yan cross-section for producing such $L^+L^-$ pairs will be even lower. Correspondingly, the expected number of $L^\circ$ decays that could have been detected will be lower too. This decrease may be compensated for if the Q-value of the $L^\pm$ decay is relatively small, such that the $L^\circ$'s are produced with little momentum. Consequently, the $L^\circ$'s will be beamed forward into the detector in a cone of smaller solid angle.

C. Sensitivity to L°'s Arising from $F^{\pm}$ Meson Decay

As discussed in Chapter II-D, as much as 0.9% of the decays of the charmed pseudoscalar meson $F^{\pm}$ may use the channel $F^{+} \rightarrow L^{+} + L^{\circ}$ where $L^{\pm} = \tau^{\pm}$. This calculation assumed $m_{L^{\circ}} = 0$. Of course, for $m_{L^{\circ}} \neq 0$, the branching ratio will be correspondingly lower. On the other hand, if one assumes the existence of a neutral heavy lepton E° (M°) of mass $\sim 1.6$ GeV/$c^2$, then 1.8% of the $F^{\pm}$ decays may be via $F^{+} \rightarrow e^{+}(\mu^{+}) + E^{\circ}(M^{\circ})$. However, on the basis of the equation presented in Chapter II-C, one might expect the lifetime of this electron- or muon-related neutral heavy lepton to be $\sim 4 \times 10^{-13}$ seconds if its coupling to $e^{-}(\mu^{-})$ is at full strength G. Hence, such a neutral heavy lepton would have decayed long before it reached the spectrometer of the present experiment. Nevertheless, since neutral heavy leptons have not been discovered, the question of their lifetimes also remains unanswered. In this spirit and on the assumption that the proton-nucleon cross-section for producing F's may be as large as 100μb/nucleon as discussed in Chapter II-E, we might expect that $F^{\pm}$ decay would be a significant source of neutral heavy leptons which could have been detected in this experiment. At this production cross-section, $7 \times 10^{10}$ $F^{\pm}$ mesons would have been created during the course of the experiment.

First, I will calculate the number of L°'s and $\bar{L}^{\circ}$'s which could have been detected given that they are produced in the processes $F^{+} \rightarrow \tau^{+} + L^{\circ}$ and $\tau^{+} \rightarrow \bar{L}^{\circ} + X^{+}$. Let us assume $m_{L^{\circ}} = 150$ MeV/$c^2$ and take into account the additional phase space suppresion of this decay mode of the $F^{\pm}$ by arbitrarily setting $\Gamma(F^{+} \rightarrow \tau^{+} + L^{\circ})/\Gamma(F^{+} \rightarrow \text{all}) = 0.1\%$.

In these processes, two neutral heavy leptons are generated. However, since the branching ratio of $\tau \rightarrow L^\circ + \mu + \nu_\mu$ is $\sim$ 20% and the experiment was not sensitive to $L^\circ$'s accompanied by muons, the gain is not 2, but 1.6. Let us assume that the $L^\circ$'s are created isotropically in the center-of-mass of the proton beam and the beamdump and that only 2% of them can satisfy the experimental acceptance $\theta_{lab} \lesssim 10$ mr. Finally, taking their lifetime to be $3 \times 10^{-10}$ seconds for which the spectrometer acceptance is maximized at $1.4 \times 10^{-2}$, the number of $L^\circ$ decays that could have been detected is $(7 \times 10^{10}) \times (0.1\%) \times (1.6) \times (2\%) \times (1.4 \times 10^{-2}) \times (0.17) = 5330$. If one assumes an $L^\circ$ lifetime of $10^{-8}$ seconds instead, then since the spectrometer acceptance is a factor of $\sim$ 33 lower, the predicted yield of detectable $L^\circ$ decays is 160.

The fact that no $L^\circ$'s decays were detected during the experiment is consistent with the neutral particle associated with the $\tau$ having a lifetime $\gg 10^{-8}$ seconds. This, in turn, is consistent with the popular belief that $(\tau^-, L^\circ)$ form a pair of sequential leptons. The authority of this statement, however, rests primarily on the untested assumptions that the proton-nucleon cross-section for producing $F^\pm$ mesons at $s \sim 800$ GeV$^2$ is 100μb/nucleon and that the branching ratio of $F^\pm$ mesons into $\tau + L^\circ$ is 0.001.

Next, let us estimate the number of neutral heavy lepton decays we could have observed assuming the production mechanism $F^+ \rightarrow E^\circ(M^\circ) + e^+(\mu^+)$. Of course, since the presence of a muon with energy > 10 GeV would have vetoed the event, the experiment could not have detected $M^\circ$'s. Assuming

In these processes, two neutral heavy leptons are generated. However, since the branching ratio of $\tau \rightarrow L^\circ + \mu + \nu_\mu$ is $\sim$ 20% and the experiment was not sensitive to $L^\circ$'s accompanied by muons, the gain is not 2, but 1.6. Let us assume that the $L^\circ$'s are created isotropically in the center-of-mass of the proton beam and the beamdump and that only 2% of them can satisfy the experimental acceptance $\theta_{lab} \lesssim 10$ mr. Finally, taking their lifetime to be $3 \times 10^{-10}$ seconds for which the spectrometer acceptance is maximized at $1.4 \times 10^{-2}$, the number of $L^\circ$ decays that could have been detected is $(7 \times 10^{10}) \times (0.1\%) \times (1.6) \times (2\%) \times (1.4 \times 10^{-2}) \times (0.17) = 5330$. If one assumes an $L^\circ$ lifetime of $10^{-8}$ seconds instead, then since the spectrometer acceptance is a factor of $\sim$ 33 lower, the predicted yield of detectable $L^\circ$ decays is 160.

The fact that no $L^\circ$'s decays were detected during the experiment is consistent with the neutral particle associated with the $\tau$ having a lifetime $\gg 10^{-8}$ seconds. This, in turn, is consistent with the popular belief that $(\tau^-, L^\circ)$ form a pair of sequential leptons. The authority of this statement, however, rests primarily on the untested assumptions that the proton-nucleon cross-section for producing $F^\pm$ mesons at $s \sim 800$ GeV$^2$ is 100μb/nucleon and that the branching ratio of $F^\pm$ mesons into $\tau + L^\circ$ is 0.001.

Next, let us estimate the number of neutral heavy lepton decays we could have observed assuming the production mechanism $F^+ \rightarrow E^\circ(M^\circ) + e^+(\mu^+)$. Of course, since the presence of a muon with energy > 10 GeV would have vetoed the event, the experiment could not have detected $M^\circ$'s. Assuming

$m_{E^\circ} = 1.6$ GeV/$c^2$ and neglecting $m_e$, one finds that the neutral heavy lepton arising in $F^\pm$ (2.030 GeV/$c^2$) decay has an energy 1.65 GeV and a momentum of 0.385 GeV/c. Let us assume that the $F^+$ decay occurs at rest in the center-of-mass frame of the proton-beam and the laboratory. Then it is straightforward to show that E°'s created with $\theta_{cm} \leq 790$ mr in the forward hemisphere would be accepted by the spectrometer. If the $F^\pm$ decays into E° isotropically, then this angular acceptance corresponds to 15% of the total solid angle. Some of the neutral heavy leptons created in the backward hemisphere ($90° \leq \theta_{cm} \leq 180°$) will also be accepted by the spectrometer. Because the E° has been assumed to have a mass of 1.6 GeV/$c^2$, the probability that the charged particles produced in its decay will pass through the apertures of the spectrometer is lower than the maximal sensitivity. From Figure 9, I will take the acceptance to be $\sim 7 \times 10^{-4}$ which is appropriate for a neutral heavy lepton of this mass which has a lifetime of $\sim 10^{-9}$ seconds. Moreover, the branching ratio of the E° into 2 charged particles is now $\sim$ 50%. Putting all the above factors together, we find that $(7 \times 10^{10}) \times (1.8\%) \times (50\%) \times (15\%) \times (7 \times 10^{-4}) \times (0.17) = 11250$ E° decays could have been detected.

The fact that the decays of such neutral heavy leptons E° were not observed is consistent with their non-existence or with their lifetime being outside of the range $10^{-11}$ to $10^{-6}$ seconds. This conclusion, however, is based primarily on the untested assumptions that the proton-nucleon cross-section for the production of $F^\pm$ mesons is 100μb/nucleon and that the branching ratio of the decay mode $F \to e + E°$ is 1.8% where $m_{E^\circ} = 1.6$ GeV/$c^2$.

## D. Sensitivity to $L^\circ$'s Arising from the Decays of New Heavy Particles

Another possible source of $L^\circ$'s is in the decays of hadrons composed of quarks heavier than the charm quark. In analogy to the leptonic decays of the $J/\psi$ particle, one may expect that the $\Upsilon$ and $\Upsilon'$ particles discovered in proton-nucleon collisions will decay via $\Upsilon(\Upsilon') \rightarrow e^+ + e^-$, $\mu^+ + \mu^-$, $\tau^+ + \tau^-$, and $L^+ + L^-$, where $m_{L^\pm} \lesssim 5$ GeV/$c^2$. The $\tau$'s and L's then may decay into states containing neutral heavy leptons. The cross-section for the 400 GeV/c proton-nucleon production of $\Upsilon$ which then decays into $\mu^+ + \mu^-$ is $3.2 \times 10^{-37}$ $cm^2$/nucleon [ 32 ]. Since the branching ratios for the decay modes into $\tau^+\tau^-$ and/or $L^+L^-$ pairs will not exceed that for $\mu^+\mu^-$, this process will yield a number of detectable $L^\circ$ decays which is at most $\sim 0.0064$ that produced by the Drell-Yan process described earlier, for which the cross-section is $5 \times 10^{-35}$ $cm^2$/nucleon.

A more plentiful source of $L^\circ$'s might be found in the decays of the pseudoscalar mesons composed out of this new quark. In their SU(3) X U(1) gauge theory of weak and electromagnetic interactions, Lee and Shrock [103] predict that the next quark Q heavier than the charm quark will decay almost 100% of the time into neutral heavy leptons via semileptonic modes such as $Q \rightarrow u + e^- + \overline{E}^\circ$. This occurs because they propose the existence of another heavy intermediate boson $U^\pm$ in addition to the familiar $W^\pm$. Just as the $W^\pm$ allows transitions among the light quarks and among the light leptons, the $U^\pm$ would couple the heavy quarks Q to the light quarks and the heavy leptons $E^\circ$, $M^\circ$, $T^\circ$, $E^-$, $M^-$, $T^-$ to the lighter leptons.

To estimate the number of $L_1^0$'s which the experiment could have detected, we must know the proton-nucleon cross-section for the production of mesons containing this new quark Q. Unfortunately, this process has not yet been observed. Nonetheless, an educated guess can be made based on the fact that the cross-section to produce a pair of strange particles is approximately a factor of 20 greater than the cross-section to produce the $\phi$-meson in proton-proton collisions at 24 GeV/c [104]. This data has been cited by Quigg [105] in support of the view that to produce charmed quarks in pairs might not be more difficult than to have the quarks stick together and form the $J/\psi$ meson. In fact, it might be easier to create particles in which charm is unbound than to create a particle in which the charm quantum number is bound up and hidden. Quigg states that it is popular to guess that at high energies, $\sigma(D\bar{D})$ may be 20 to 30 times larger than $\sigma(J/\psi)$, which has been measured to be of the order of $10^{-31}$ $cm^2$/nucleon. If the source of prompt neutrinos found in the CERN beamdump experiments [106] is due to the semileptonic decays of D and $\bar{D}$ mesons, then since the necessary cross-sections must be in the range of 10 to 100 $\mu$b, it may be that $\sigma(D\bar{D})/\sigma(J/\psi) \sim 100$ to 1000. On this basis, let us be optimistic and assume that $\sigma(Q\bar{Q}) / \sigma(\Upsilon) \sim 1000$. Since the branching ratio for $\Upsilon \rightarrow \mu^+ + \mu^-$ is predicted to be 5%, [107], $\sigma(\Upsilon)$ can be found to be $6.4 \times 10^{-36}$ $cm^2$/nucleon. Therefore, $\sigma(Q\bar{Q}) \sim 6 \times 10^{-33}$ $cm^2$/nucleon.

During the course of the experiment, $4.2 \times 10^6$ pairs of mesons containing this new quark may have been created. These mesons will have masses $\sim 5$ GeV/$c^2$. Let us assume that they are created at rest in the

center-of-mass frame of the proton beam and the laboratory and that each pair of mesons decays isotropically 100% of the time into an $E^\circ$ and $\overline{E}^\circ$. If the masses of these neutral heavy leptons are taken to be 1.6 $GeV/c^2$, then only 2% of them will be accepted by the spectrometer. Consequently, the number of $E^\circ$ decays which could have been detected is $(4.2 \times 10^6) \times (2.0) \times (50\%) \times (2\%) \times (7 \times 10^{-4}) \times (0.17) = 10$. It has been assumed that the $E^\circ$'s have a lifetime of $10^{-9}$ seconds, a branching ratio into 2 charged particles of 50%, and that the acceptance of the spectrometer is $7 \times 10^{-4}$.

Once again, the fact that no $E^\circ$ decays were detected is consistent with the non-existence of these particles or with their possessing lifetimes less than $10^{-11}$ seconds or greater than $10^{-8}$ seconds. This conclusion, however, is based on the unfounded assumption that the 400 GeV/c proton-nucleon cross-section for the production of mesons carrying this new quantum number Q is $6 \times 10^{-33}$ $cm^2$/nucleon. It is also based on the untested assumption that 100% of the decay modes of such particles involve neutral heavy leptons.

# CHAPTER VII

## CONCLUSIONS

No evidence has been found in this experiment for the 400 GeV/c proton-nucleon production of neutral heavy leptons $L^\circ$ of lifetime between $10^{-10}$ and $10^{-8}$ seconds. For this range of lifetimes, and for masses $\leq 1$ GeV/$c^2$, the upper limit on the cross-section $\sigma$ for the creation of $L^\circ$'s with Feynman $x = P_{\parallel}^{cm}/P_{max}^{cm} \gtrsim 0.2$ and $\theta_{lab} \lesssim 10$ mr and with branching ratio B into two charged particles is $\sigma B \leq 3.9 \times 10^{-35}$ $cm^2$/nucleon at the 90% confidence level [ 97]. This limit applies only to $L^\circ$ production without accompanying muons of energy $\gtrsim 10$ GeV/c.

The number of $L^\circ$ decays which could have been detected was estimated for several different production mechanisms. The neutral particle associated with the $\tau$ may be produced in the decays of the charmed pseudoscalar mesons via $F^+ \rightarrow \tau^+ + L^\circ$ and $\tau^+ \rightarrow L^\circ$ + anything. If the cross-section for charmed meson production in proton-nucleon interactions is 10 to 100 $\mu$b/nucleon as CERN beamdump experiments may indicate [106 ], and if this $L^\circ$ is as massive as 150 MeV/$c^2$, its decays could have been detected. The fact that no decays were detected is consistent with $\tau_{L^\circ} > 10^{-8}$ seconds and, hence, with the interpretation of $(\tau^-, L^\circ)$ as a pair of sequential leptons. The experiment also could have detected the decays of long-lived neutral heavy leptons $E^\circ$ produced in $F^+ \rightarrow e^+ + E^\circ$. In addition, it may also have been sensitive to $E^\circ$'s arising from the semileptonic decays of mesons composed of quarks of mass 5 GeV/$c^2$ if the production cross-section of such mesons is as large as $6 \times 10^{-33}$ $cm^2$/nucleon. In this case, the non-observation of $E^\circ$ decays is consistent

with their non-existence or with their life-time being outside the range of maximum sensitivity: $10^{-10} < \tau_{E^\circ} < 10^{-8}$ seconds.

## REFERENCES


1. The primary results of this experiment have been published in D. Bechis et al., Phys. Rev. Lett. 40, 602 (1978).
2. M. Perl and P. Rapidis, SLAC PUB 1496 (1974).
3. Particle Properties Data Booklet, reprinted from Phys. Lett. 75B, No. 1, April, 1978.
4. G. Steigman, D. Schramm, and J. Gunn, Phys. Lett 66B, 202 (1977).
5. R. Cowsik and J. McClelland, Phys. Rev. Lett. 29, 669 (1972) and also Astrophys. J. 180, 7 (1973).
6. B.W. Lee and S. Weinberg, Phys. Rev. Lett. 39, 165 (1977).
7. For an excellent comprehensive review, see M.L. Perl, "Review of Heavy Leptons in $e^+e^-$ Annihilation," presented at the 1977 International Symposium on Lepton and Photon Interactions at High Energies, Hamburg, Germany, edited by F. Gutbrod. Also, see B.P. Kwan, SLAC Report No. 207 (1978).
8. The experimental data on this particle will be reviewed shortly in Chapter II-E.
9. W. Bacino et al., Phys Rev. Lett. 41, 13 (1978).
10. R. Brandelik et al., Phys. Lett. 73B, 109 (1978).
11. Y.S. Tsai, Phys. Rev. D4, 2821 (1971). See Chapter II-C and Table 1 of this dissertation, where some of Tsai's results are presented.
12. This point can be made transparent by considering $\tau^+ \to \overline{L^\circ} + e^+ + \nu_e$ decay where all particle trajectories are constrained to be collinear. For V-A coupling, the $\overline{L^\circ}$ will be predominantly right-handed (it will be exactly right-handed if $m_{L^\circ} = 0$), whereas for V+A coupling, the

$L^\circ$ will be predominantly left-handed (similar proviso). From $\beta$ decay and the decay of the $\mu$, it is already known that (e, $\nu_e$) are V-A coupled, so the $e^+$ in the $\tau$ decay will be predominantly right-handed and $\nu_e$ will be left-handed. Therefore, for V-A $\tau^+$ decay, angular momentum will not be violated if the right-handed $\overline{L^\circ}$ and left-handed $\nu_e$ are ejected in a direction opposite to $\tau^+$'s spin, and the right-handed $e^+$ is ejected in the direction of $\tau^+$'s spin. In this scenario, the $e^+$ will have close to its maximum possible momentum. For V+A $\tau^+$ decay, to conserve angular momentum, the left-handed $\overline{L^\circ}$ will have to be ejected in the same direction as $e^+$, thus making it less likely that $e^+$ will have a momentum close to the maximum.

13. See the second paper in Ref. 7. This calculation also assumed $m_\tau = 190\ \mathrm{GeV}/c^2$.

14. S.L. Adler, Phys. Rev. 177, 2426 (1969); J.S. Bell and R. Jackiw, Nuovo Cim. 51, 47 (1969).

15. S. Weinberg, Phys. Rev. Lett. 19, 1264 (1967); A. Salam in Elementary Particle Theory, edited by N. Svartholm, published by Almquist and Forlag, Stockholm (1968).

16. F.J. Hasert et al., Phys. Lett. 46B, 138 (1973); A. Benvenuti et al., Phys. Rev. Lett. 32, 800 (1974); and B.C. Barish et al., Phys. Rev. Lett. 34, 538 (1975).

17. For an excellent review of the Weinberg-Salam theory as well as the early development of gauge theories, see E.S. Abers and B.W. Lee, Physics Reports 9C, 1 (1973).

18. The results have not been formally published yet. For a preliminary discussion, see Science 201, 245 (1978).

19. R. Cahn and F. Gilman, Phys. Rev. D17, 1313 (1978) have calculated these coupling strengths for a number of unified gauge theories of weak and electromagnetic interactions.

20. M. Holder et al., Phys. Lett. 71B, 222 (1977).

21. Reports given at International Neutrino Conference, Purdue University, April 1978; there is also great uncertainty in the atomic physics calculations needed to interpret the experimental results - see, for instance, G. Feinberg, Ben Lee Memorial Conference, 1977.

22. A.M. Cnops et al., Phys. Rev. Lett. 41, 357 (1978).

23. H. Faissner et al., Phys. Rev. Lett. 41, 213 (1978).

24. P. Alibran et al., Phys. Lett. 74B, 422 (1978).

25. S. Weinberg, Phys. Rev. Lett. 27, 1688 (1971).

26. D. Gross and R. Jackiw, Phys. Rev. D6, 477 (1972).

27. C. Bouchiat, J. Iliopoulos, and Ph. Meyer, Phys. Lett. 38B, 519 (1972).

28. This particular procedure for eliminating anomalies was suggested by the authors of References 26 and 27. H. Georgi and S.L. Glashow, Phys. Rev. D6, 429 (1972) discussed all possible general procedures for the removal of these divergences.

29. This is the "2 - 2 Model" discussed by J.D. Bjorken and C.H. Llewellyn Smith, Phys. Rev. D7, 887 (1973).

30. B.W. Lee and R.E. Shrock, Phys. Rev. D17, 2410 (1978).

31. As Lee and Shrock point out, their model falls into a class of anomaly-free theories predicted by Georgi and Glashow in which the particular procedure mentioned in Reference 28 is not used to eliminate triangle anomalies. Instead, the anomalies are removed because the detailed structure of the gauge group permits a trivial redefinition of the fermion fields which allows their interactions with the gauge fields via V+A and V-A currents to be written as interactions via pure vector currents. Gauge theories in which this technique can be used to remove triangle anomalies are called "vector-like." In the sense that additional leptons are needed to fill the fundamental representation of the gauge group, one may say their existence is required to preserve the unitarity and renormalizability of the theory. See C.H. Llewellyn Smith, "Heavy Leptons," to be published in the Proceedings of the Royal Society, 1976.

32. S.W. Herb et al., Phys. Rev. Lett. 39, 252 (1977).

33. Ch. Berger et al., Phys. Lett. 76B, 243 (1978); C.W. Darden et al., Phys. Lett. 76B, 246 (1978).

34. This concept has been discussed by Bouchiat, Iliopoulos, and Meyer (Ref. 27), by Abers and Lee (Ref. 17), by C.H. Llewellyn Smith (Ref. 31), and more recently by H. Harari, Physics Reports 42C, 235 (1978).

35. S.L. Glashow, J. Iliopoulos, and L. Maiani, Phys. Rev. D2, 1285 (1970) postulated the existence of the charmed quark c to achieve lepton-quark symmetry and to provide a natural mechanism for the suppression of strangeness-changing neutral current events.

36. Most of the authors given in Ref. 34 state that in pure left-handed Weinberg-Salam models modified to incorporate the quarks as well, the condition for the elimination of the triangle anomalies is $\Sigma Q_\ell + 3\Sigma Q_q = 0$ where
$\ell = e^-, \nu_e, \mu^-, \nu_\mu, \tau^-, \nu_\tau, \ldots$ with electric charges
$Q_\ell = -1, 0, -1, 0, -1, 0, \ldots\ldots$ and where
$q = n, p, \lambda, c, b, t, \ldots\ldots\ldots$ with charges
$Q_q = -1/3, +2/3, -1/3, +2/3, \ldots$ . The factor of 3 arises from the assumption that quarks come in 3 colors, which is required by the successful SU(6) symmetric quark model of the hadrons in order that the Fermi-Dirac quarks not violate the Pauli exclusion principle. In such SU(2) ⊗ U(1) models, the neutral leptons are massless and the fermions are classified solely as singlets and doublets.

37. See D.J. Bechis, C.Y. Chang, and K.H. Lau, University of Maryland Physics Publications 78-161 and 78-206 (1978).

38. T.P. Cheng and L.-F. Li, Phys. Rev. D16, 1425 (1977); B.W. Lee and R.E. Shrock, Phys. Rev. D16, 1444 (1977); and J.D. Bjorken, K. Lane, and S. Weinberg, Phys. Rev. D16, 1474 (1977).

39. F.E. Low, Phys. Rev. Lett. 14, 238 (1965).

40. J.D. Bjorken and C.H. Llewellyn Smith, Phys. Rev. D7, 887 (1973).

41. A. Pais and S.B. Treiman, Phys. Rev. Lett. 35, 1206 (1975); H.P. Nilles, Nucl. Phys. B121, 151 (1977); L.M. Sehgal and P.M. Zerwas, Phys. Rev. D16, 2379 (1977); and H.W. Rupertsberger, Phys. Rev. D17, 216 (1978).

42. The first paper in Ref. 41.

43. See C.H. Llewellyn Smith (Ref. 31).

44. A. Ali and T.C. Yang, Phys. Rev. D14, 3052 (1976).

45. M.L. Perl, SLAC-PUB-1991 (1977); F.B. Heile et al., SLAC-PUB-2059 (1977); also see B.P. Kwan (Ref. 7).

46. C. Bacci et al., Phys. Lett. 71B, 227 (1977).

47. J. Kirkby, private communication; also a report presented at the Vanderbilt conference (1978).

48. S. Gasiorowicz, Elementary Particle Physics, John Wiley & Sons, Inc., New York 1966. See p. 506.

49. It has recently come to my attention that a slight discrepancy between the predicted and observed ratio for $\pi \to e + \nu_e$ / $\pi \to \mu + \nu_\mu$ has been found by D. Bryman and C. Picciotto, Phys. Rev. D11, 1337 (1975). The discrepancy was found by using a more recent value of the $\pi$ lifetime to recompute the measured value of this ratio which depends on the assumed value of the $\pi$ lifetime. N. Cabibbo, "Quark and Lepton Mixing," in Lectures given at the XV Ettore Majorana School for Subnuclear Physics, Erice (1977) discusses the discrepancy in terms of models which allow mixing among the three neutrinos $\nu_e$, $\nu_\mu$, and $\nu_\tau$.

50. D.I. Meyer et al., submitted to Phys. Lett.B (1977).

51. F. Bletzacker and H.T. Nieh, Phys. Rev. D16, 2115 (1977); B. Humpert and P.N. Scharbach, Phys. Rev. D16, 2754 (1977); K. Fujikawa, Phys. Rev. D17, 1841 (1978); K. Yamanashi, T. Okasaki, and E. Yamada, Phys. Lett. 74B, 101 (1978; and finally, A. Ali Phys. Rev. D10, 2801 (1974)

52. M.K. Gaillard, B.W. Lee, and J.L. Rosner, Rev. Of Mod. Phys. 47, 277 (1975).

53. U. Timm in Proceedings of the 1977 European Conference on Particle Physics, Budapest, Hungary, edited by L. Jenik and I. Montvay. See Vol. II, p. 743. R. Brandelik et al., Phys. Lett. 70B, 132 (1977).

54. I. Karliner, Phys. Rev. Lett. 36, 759 (1976).

55. J. Ellis, M.K. Gaillard, and D.V. Nanopoulos, Nucl. Phys. B100, 313 (1975).

56. M. Holder et al., Phys. Lett. 74B, 277 (1978).

57. B.C. Barish et al., Phys. Rev. Lett. 32, 1387 (1974).

58. A.M. Cnops et al., Phys. Rev. Lett. 40, 144 (1978).

59. M. Holder et al., Phys. Lett. 72B, 254 (1977).

60. A.E. Asratyan and M.A. Kubantsev, Phys. Lett. 76B, 237 (1978).

61. A Benvenuti et al., Phys. Rev. Lett. 34, 419 (1975); 35, 1199 (1975); 35, 1203 (1975); and 35, 1249 (1975). See L.N. Chang, E. Derman, and J.N.Ng Phys. Rev. Lett. 35, 6 (1975) for an L° interpretation.

62. See L.N. Chang and J.N. Ng, Phys. Rev. D16, 3157 (1977) and references therein.

63. J. von Krogh et al., Phys. Rev. Lett. 36, 710 (1976); C. Baltay et al., Phys. Rev. Lett. 39, 62 (1977); P. Bosetti et al., Phys. Rev. Lett. 38, 1248 (1977) and Phys. Lett. 73B, 380 (1978).

64. D.S. Baranov et al., Phys. Lett. 70B, 269 (1977).

65. B.C. Barish et al., Phys. Rev. Lett. 38, 577 (1977); A. Benvenuti et al., Phys. Rev. Lett. 38, 1110 and 1183 (1977); and M. Holder et al., Phys. Lett. 70B, 393 (1977).

66. See V. Barger, T. Gottschalk, D.V. Nanopoulos, J. Abad, and R.J.N. Phillips, Phys. Rev. Lett. 38, 1190 (1977) and Phys. Rev. D16, 2141 (1977) and A. De Rujula, H. Georgi, and S.L. Glashow, Phys. Rev. D17, 151 (1978) and the references contained in these papers.

67. J. Smith, talk at the International Neutrino Conference, Purdue University, April 1978; V. Barger, T. Gottschalk, and R.J.N. Phillips, Phys. Rev. D17, 2284 (1978); and J. Smith and J.A.M. Vermaseren, Phys. Rev. D17, 2288 (1978).

68. M. Holder et al., Phys. Lett. 73B, 105 (1978) and Cern Courier 18, 156 (1978).

69. V. Barger and R.J.N. Phillips, Phys. Lett. 74B, 393 (1978).

70. P. Alibran et al., Phys. Lett. 74B, 134 (1978).

71. T. Hansl et al., Phys. Lett. 74B, 139 (1978).

72. P.C. Bosetti et al., Phys. Lett. 74B, 143 (1978).

73. G. Bertrand - Coremans et al., Phys. Lett. 65B, 480 (1976). Ref. 72 makes the estimate 100 to 400 μb for the cross-section of $p + p \to D + \bar{D} + X$.

74. S.D. Drell and T.M. Yan, Phys. Rev. Lett. 25, 316 (1970).

75. R. Bhattacharya, J. Smith, and A. Soni, Phys. Rev. D13, 2150 (1976).

76. H. Faissner et al., Phys. Lett. 60B, 401 (1976).

77. A. DeRujula, H. Georgi, and S.L. Glashow, Phys. Rev. Lett. 35, 628 (1975).

78. M.R. Krishnaswamy et al., Proc. Roy. Soc., Ser. A 323, 489 (1971) and Phys. Lett. 57B, 105 (1975).

79. A. Benvenuti et al., Phys. Rev. Lett. 35, 1486 (1975).

80. A.F. Rothenberg, SLAC - 147 (1972).

81. J.A. Appel et al., Phys. Rev. Lett. 32, 428 (1974).

82. M.G. Albrow et al., Nucl. Phys. B97, 189 (1975).

83. J.W. Cronin et al., Phys. Rev. D10, 3093 (1974).

84. D. Bintinger et al., Phys. Rev. Lett. 34, 982 (1975).

85. S.V. Golovkin et al., Phys. Lett. 42B, 136 (1972)

86. M. Antinucci et al., Lett Al. Nuovo Cimento 6, 121 (1973).

87. J.D. Jackson, Classical Electrodynamics, John Wiley and Sons, Inc., Second Edition 1975. See equation 15.57, p. 723.

88. K.C. Moffeit et al., Phys. Rev. D5, 1603 (1972).

89. J.F. Martin et al., Phys. Rev. Lett. 40, 283 (1978).

90. J. Blietschau et al., Phys. Lett. 71B, 231 (1977).

91. The value 0.8 is determined from the average of B.C. Barish et al., Phys. Rev. Lett. 35, 1316 (1975) and A. Benvenuti et al., Phys. Rev. Lett. 32, 125 (1974).

92. The collimated sweeping magnet and the spectrometer is owned and operated by the neutral hyperon groups of Rutgers University and the University of Michigan and Wisconsin. Further descriptions of the apparatus can be found in G. Bunce et al., Phys. Rev. Lett. 36, 1113 (1976) and in the PhD. Thesis of P.L. Skubic, University of Michigan HE 77-32 (1977).

93. See, for instance, M. Jacob, The Proceedings of the 1973 CERN-JINR School of Physics, Ebeltoft, Denmark, 1973, O. Kofoed-Hansen, editor.

94. For $K^\circ_S$ which decay into $\pi^+$ and $\pi^-$ which are highly relativistic, the error in the invariant mass may be calculated from $M_K \, \partial M_K \simeq |\vec{p}_{\pi+}| \cdot |\vec{p}_{\pi-}| \sin\theta \, \partial\theta$ where $\theta$ is the opening angle between the $\pi^+$ and $\pi^-$ trajectories in the laboratory frame. Assume, $|p_{\pi+}| = |p_{\pi-}| \simeq$ 50 GeV/c, which is half the average value of the $K^\circ_S$ momentum displayed in Figure 7. Moreover, the average opening angle $\theta$ of the $\pi$'s was observed to be $\sim$ 0.0084 radians, in fair agreement with the simple model which neglects $m_\pi$ and predicts $\theta \sim 2/ (E_{K^\circ}/m_{K^\circ})$ for decays in which the particles go off perpendicular to the direction of $K^\circ_S$. If we assume that $\partial\theta$ is due to the finite spacing of the wires in the chambers, then $\partial\theta \sim 0.00036$ if the actual track differs by 1 wire spacing of 0.2 cm over the distance of 559 cm between the first and third chambers. Consequently, $\partial M_K \sim 0.015$ GeV/$c^2$.

95. The number of unknown events was reported to be 5 in Ref. 1. The discrepancy is due to a trivial error in the computer code which was not found until after publication.

96. As indicated in Ref. 3, the Lorentz factor $\gamma$ which relates the center-of- mass frame of the proton beam and the beamdump to the laboratory frame is $\gamma = (E_{lab} + m_N) / \sqrt{S}$ where $E_{lab} = 400$ GeV. Moreover, $x = P_{\parallel}^{cm} / P_{max}^{cm}$, where $P_{max}^{cm} = (S - m_{L^\circ}{}^2) / (2\sqrt{S})$. From these equations it is straight forward to calculate the momenta of the $L^\circ$'s in the laboratory frame.

97. The upper limit given here is 40% larger than that quoted in Ref. 1. The discrepancy is the result of an electronics problem in the scaler module used to monitor the deadtime. Unfortunately, the error was not noticed until after publication.

98. The primary results of this subchapter have already been presented in D.J. Bechis et al., "Sensitivity of a Search for Long-Lived Neutral Heavy Leptons ($L^\circ$) Arising from $\tau^+\tau^-$ Pair Production in 400 GeV/c Proton Interactions," to be published in the Proceedings of the 1978 International Conference on Neutrino Physics and Neutrino Astrophysics, Purdue University.

99. S. Pakvasa, D. Parashar, and S.F. Tuan, Phys. Rev. D10, 2124 (1974).

100. J.C. Collins and D.E. Soper, Phys. Rev. D16, 2219 (1977).

101. That is, in the di-lepton center-of-mass, $|\vec{P}_{\tau+}|^2 = |\vec{P}_{\tau-}|^2 = (m^2 - 4m_\tau^2)/4$. The velocity vector $\vec{\beta}$ of the dilepton center-of-mass relative to the proton beam - beamdump center-of-mass is given by $\beta_3 = Q_3/Q_0$ where $Q_0 = (Q_3 \cdot Q_3 + m \cdot m)^{1/2}$ and $Q_3 = P_{max}^{cm} \cdot x$. See Ref. 96.

102. The maximum energy the $L^\circ$ can acquire in the decay $\tau^+ \to L^\circ + e^+ + \nu_e$ is $E_{max} = (m_\tau^2 + m_{L^\circ}^2)/2m_\tau$ where $m_e = 0$ is assumed. Let $x = E_{L^\circ}/E_{max}$ where $(m_{L^\circ}/E_{max}) \leq x \leq 1$ and define $C = m_{L^\circ}^2/(m_\tau E_{max})$. Then $dN/dx = x^2(1 + C) - 2Cx - 2x^3/3 + C^2 - C^3/3$. In the limit $m_{L^\circ} = 0$, this reduces to the familar equation $dN/dx = x^2(1 - 2x/3)$ given on p. 357 of K. Nishijima, Fundamental Particles, W.A. Benjamin, Inc. New York 1964.

103. See Ref. 30 as well as R.E. Shrock, Phys. Rev. Lett. 40, 1688 (1978).

104. V. Blobel et al., Phys. Lett. 59B, 88 (1975).

105. C. Quigg, "Lectures on Charmed Particles", Fermilab - Conf - 78/37-THY (1978). For an identical conjecture on the cross-section for the production of a pair of charmed particles, see M. Goldhaber and L.L Wang, Brookhaven National Laboratory report 24441 (1978).

106. See References 70, 71, and 72.

107. F. Halzen and S. Matsuda, Phys. Rev. D17, 1344 (1978).