TESLA & ILC Cryomodules

T. J. Peterson & J. G. Weisend II

1. Introduction

The Deutsches Electronen Synchrotron (DESY) in Hamburg, Germany, led the early electron-positron linear collider collaboration which developed the concept called TESLA (Tera-Electronvolt Superconducting Linear Accelerator) [1] in the late 1980's and early 1990's. The TESLA collaboration desired cryomodules with a lower cost per unit length than had been developed up to that time. Among the cost-reducing features would be to connect cryomodules in continuous, long strings similar to cryostats for long strings of superconducting magnets (see for example Chapters 2 and 3). The elimination of the external cryogenic transfer line by placing all cryogenic supply and return services in the cryomodule could also reduce costs, not only directly for the cryogenic components, but also by reducing tunnel space required.

This approach, driven mainly by the number of cryomodules required, as many as 2000 in some accelerator concepts [1, 2, 3], is in contrast to the segmented cryomodules described in Chapter 6. Segmenting the cryomodules and separating them by warm sections containing magnets, vacuum systems and beam instrumentation tends to be the preferred solution in systems in which fewer than 100 cryomodules are required. The warm sections allow easier access to various accelerator systems. However, the numerous warm – cold transitions along the length of the accelerator result in higher cost and heat leak than can be tolerated in systems the size of TESLA.

Prototype TESLA cryomodules were incorporated into a test linac called the TESLA Test Facility (TTF) at DESY [4]. TTF was modified and expanded into a light source facility called the Free-electron LASer in Hamburg (FLASH). TTF and FLASH demonstrated successful operation of TESLA-style cryomodules in a linac with beam.

Various projects subsequently adopted the TESLA cryomodule design concept with some modifications depending on specific requirements and innovations. These projects include the International Linear Collider (ILC) [2, 3], X-ray Free Electron Laser (XFEL) at DESY [5], and the Linac Coherent Light Source II (LCLS-II) [6] at SLAC. LCLS-II includes more extensive modifications than the other projects described here due to LCLS-II being a continuous wave (CW) linac with higher dynamic heat loads than the other pulsed linac designs. This chapter describes the TESLA-style cryomodule design in general, with examples from TESLA prototype cryomodules and the various subsequent projects. Figure 1 illustrates one 12 meter long cryomodule mechanical assembly.

Operated by Fermi Research Alliance, LLC under Contract No. De-AC02-07CH11359 with the United States Department of Energy.

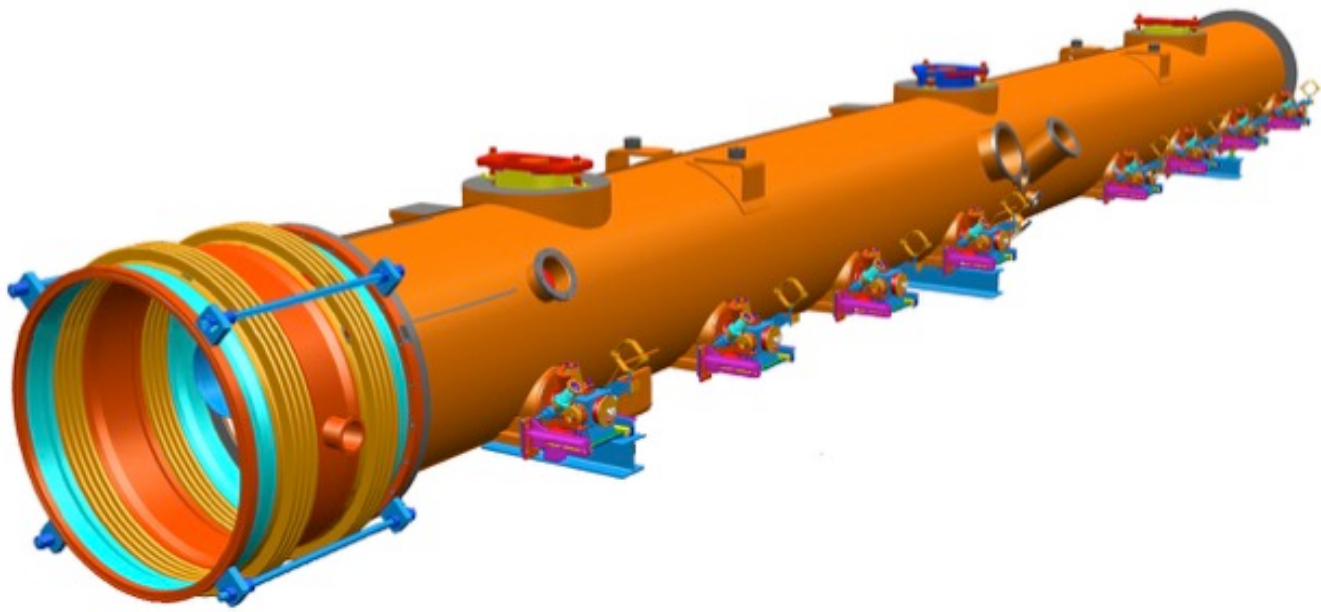

Figure 1. ILC cryomodule assembly showing vacuum vessel, eight RF power input couplers, three internal supports on top, and open ports for instrumentation flanges and for power leads providing current to a centrally located superconducting magnet package.

2. Definitions

Table 1. Definitions

Term	Definition
SRF	Superconducting Radio Frequency
CW	Continuous Wave operating mode
HOM	Higher Order Mode
TESLA	Tera-Electronvolt Superconducting Linear Accelerator (TESLA) – the predecessor to the ILC concept, developed collaboratively by DESY, Saclay, INFN, Fermilab, Jefferson Lab, Cornell, and other labs and universities under the leadership of DESY. The TESLA collaboration developed cryomodules with RF cavities in close-fitting helium vessels suspended from a large helium return pipe, cryogenic piping all within the cryostat. Hence, cryomodules having that configuration are referred to here as TESLA-style.
ILC	International Linear Collider
XFEL	X-ray Free Electron Laser, an SRF linac at DESY in Hamburg, Germany, which includes TESLA-style cryomodules

LCLS-II	Linac Coherent Light Source II, which includes a 4 GeV superconducting linac at SLAC utilizing TESLA/ILC-style cryomodules modified for CW operation in the existing SLAC tunnel.
2 K	Nominally 2 Kelvin temperature level, typically 1.8 to 2.1 K
5 K	Nominally 5 Kelvin temperature level, which includes temperatures approximately from 4.5 K to 7.5 K
70 K	Nominally 70 Kelvin temperature level, which ranges from approximately 35 K to 85 K. (Note that cryogenic circuits, thermal shields, and thermal intercepts will be ~80 K when LN2 is the coolant. Lower temperatures are provided by gaseous helium.)
MAWP	Maximum Allowable Working Pressure, a term that is used to define the safe pressure rating of a component or test system
Cold mass	Those portions of the cryomodule within the vacuum vessel which are cooler than room-temperature – RF cavities, piping, thermal shield, etc.
HGRP	Helium Gas Return Pipe, the 300 mm diameter helium pipe which also serves as the structural backbone of the cold mass in TESLA-style cryomodules.
MLI	Multi-Layer Insulation, or "superinsulation", aluminized mylar wrapped in layers alternately with a conductively insulating material in the insulating vacuum space to block thermal radiation
Q0	Cavity quality factor, of interest for cryomodule design since power dissipated by the RF cavity to the nominally 2 K temperature level is inversely proportional to Q0.

3. Functional requirements summary

The TESLA and ILC main linac cryomodules contain superconducting cavities together with cryogenic distribution lines, thermal shielding, magnets, and instrumentation. Most fundamentally, the cryomodule provides insulating vacuum, cooling, RF power, and RF cavity support and alignment for the proper functioning of the SRF cavities in the linac. Strings without breaks between individual cryomodules include up to 12 cryomodules. In addition to niobium superconducting RF cavities, cryomodules may include a combined focusing and steering magnet, a beam position monitor, and gate valves on the beamline for vacuum isolation during assembly. Beam line higher-order-mode (HOM) absorbers are located in the cold beamline interconnects between cryomodules. The cavity tuners, HOM couplers, and fundamental power couplers attach to each cavity. Cryogenic transfer lines are required only where bypasses for warm sections of the linac must be provided.

TESLA-style cryomodules have been fabricated with four 3.9 GHz RF cavities as well as with eight 1.3 GHz RF cavities. The ILC concept included some eight-cavity cryomodules with one magnet package (the configuration illustrated in Figure 1) and some nine-cavity cryomodules without a magnet. The final TESLA cryomodule design, as described in the TESLA TDR [1], contained 12 RF cavities in a further attempt to improve the packing factor of RF cavities along the linac.

A mechanical tuner with motor-driven and piezo-driven components provides active control of the RF cavity resonant frequency. RF cavities are independently powered through a fundamental power coupler on each cavity connected via air-filled waveguide to an RF source (klystron or solid-state amplifier).
Cryogenic circuits provide 2 K liquid helium to the cavities with a valve for liquid supply in each string of cryomodules or, in the case of LCLS-II, via a valve in each cryomodule. Managing a liquid helium bath of up to 100 meters or so in length is one factor in determining string length. The cryostat includes a nominally 5 K thermal intercept circuit, which may include a thermal radiation shield, and a nominally 70 K thermal radiation shield and thermal intercept circuit. Dynamic RF heating of the cavities at 2 K is a major contributor to overall cryogenic refrigeration required.
The following table provides a summary of the key functional requirements for a TESLA/ILC-style cryomodule that may drive the design. These are topics, which require particular attention during design.

Table 2. Key functional requirements for the cryomodules

Key requirement	**Description**
Series configuration	Cryomodules with insulating vacuum open at each end to the next, so connected insulating vacuums, and with cold beam pipe through the interconnect. This configuration implies considerations for the in situ connection of not only the accelerator beamline but also cryogenic pipes and insulating vacuum.
No external parallel transfer line	Cryomodules include all cryogenic piping within the cryostat, as opposed to having a parallel external cryogenic transfer line to supply cooling to cryomodules
Microphonics	As for any SRF cavity support structure, minimize cavity vibration and coupling of external sources to cavities. This is addressed by means of providing a stiff support system and stiffening of elements such as the thermal shield.
Alignment	Provide good cavity, quadrupole, and BPM alignment (typically <0.5 mm RMS).
Vibration	Minimize quadrupole magnet vibration for gradient stability of typically 0.01% RMS or better.
Seismic design	In many locations (especially Japan and California), one must design in accordance with local seismic requirements.
Thermal efficiency	Intercept significant heat loads at intermediate temperatures above 2.0 K to the extent possible. Intercepts include not only thermal radiation shield or shields and support structures, but may also include intercepts for large cables, magnet current leads, and RF components such as HOM couplers and absorbers.
Pressure safety	Cryomodules and components must comply with the requirements of the institution and/or locality in which they will operate. For accelerator laboratories in the US, this means the Department of Energy regulation

	10CFR851 – a level of safety equivalent to pressure code safety level. Designers must protect the helium and vacuum spaces including the RF cavity from exceeding MAWP.
Magnetic shielding	Provide excellent magnetic shielding and very low residual field (for example, ≤5 mG) at the niobium cavities to preserve high Q0 for less power lost as heat to 2 Kelvin.
Thermal performance	For RF cavities operating in CW mode, one may have to allow removal of over 20 W per cavity and/or 150 W at 2 K per cryomodule.
Cool-down	Provide, to the extent possible given the cryomodule string configuration, cool-down conditions which retain high cavity Q0. Recent recognition of the role of thermal gradient on the niobium cavity to "sweep out" magnetic flux as the Nb passes through the superconducting transition during cool-down may create new design goals for management of cool-down, such as the addition of a cool-down valve in each cryomodule where retaining high Q0 is particularly important.

4. Cryomodule mechanical design

4.1. Cryomodule major components and features

Cryomodules consist of various complex subassemblies, which we describe in this section, starting from the inside with the niobium RF cavity and working out to the vacuum vessel. Figure 2 shows a sketch (not to scale) of the titanium helium vessel assembly surrounding a 1.3 GHz niobium cavity consisting of multiple elliptical cells. Liquid helium completely fills the helium vessel, surrounding the RF cavity with a liquid level into the 2-phase pipe.

Heat flows via helium II heat transport through the liquid helium to the liquid surface in the 2-phase pipe where the helium evaporates. Thus, cooling below the lambda point involves no bubbling, an advantage in reducing microphonics disturbance of the RF cavity.

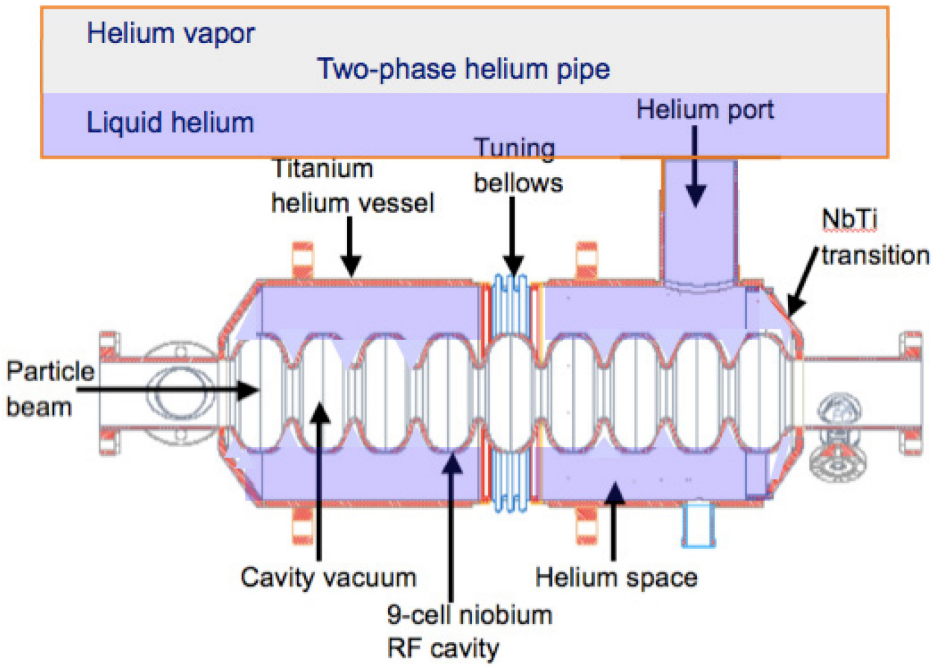

Figure 2. Helium vessel concept (not to scale) for an ILC 9-cell cavity.

Figures 3 and 4 illustrate the dressed cavity and a portion of the RF cavity string. Each of the cavities is encased in a titanium helium vessel, supported from the HGRP by means of stainless steel brackets connected to four titanium pads on the helium vessel itself. Each bracket is equipped with a longitudinal sliding mechanism and adjusting screws and pushers for alignment. A mechanical, coaxial (blade) tuner and a piezo-electric tuner are mounted to the vessel.

Dressed cavities are connected to one another via the beam tube connections and the 2-phase pipe connections. An ILC cryomodule includes a string of eight or nine such cavities connected in series. In the case of eight cavities, the ninth element in the string is a corrector magnet package, also cooled at nominally 2 Kelvin. With the cavities and magnet package each being about 1.3 meters in length, the entire cryomodule assembly is about 12 meters long.

The inter-cavity spacing—which accommodates RF- and HOM-couplers and a flanged interconnecting bellows—amounts to approximately 300 mm, depending on mechanical and RF details. For example, desire to operate beam in either direction may dictate even-wavelength spacing. Conversely, desire to disrupt the flow of "dark current" (electrons from field emission) may dictate non-integer wavelength spacing. Manually operated valves required by the clean-room assembly terminate the beam pipe at both module ends. The valves are fitted with simple RF shields.

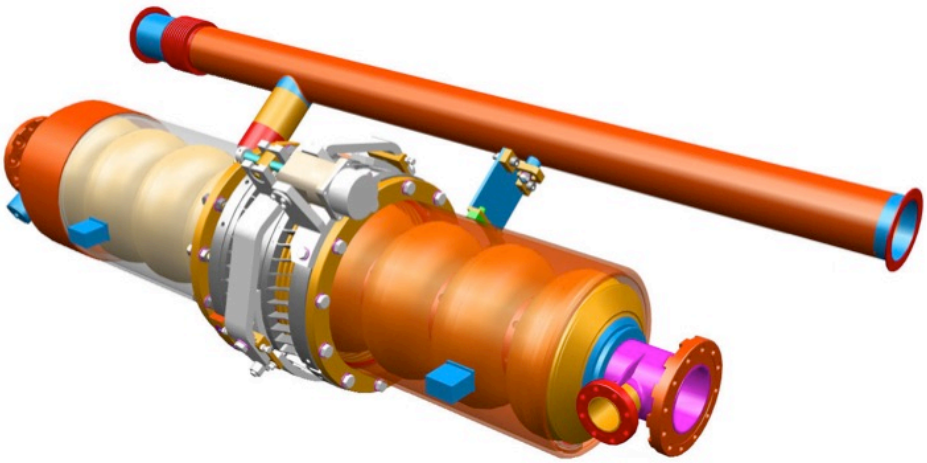

Figure 3. Dressed cavity. The titanium helium vessel is shown as transparent for a view of the 9-cell niobium RF cavity inside. This image includes an original design version of the Blade Tuner and shows the 2-phase pipe connection on top of the helium vessel. The connection from the helium vessel to the 2-phase pipe is called the nozzle or "chimney".

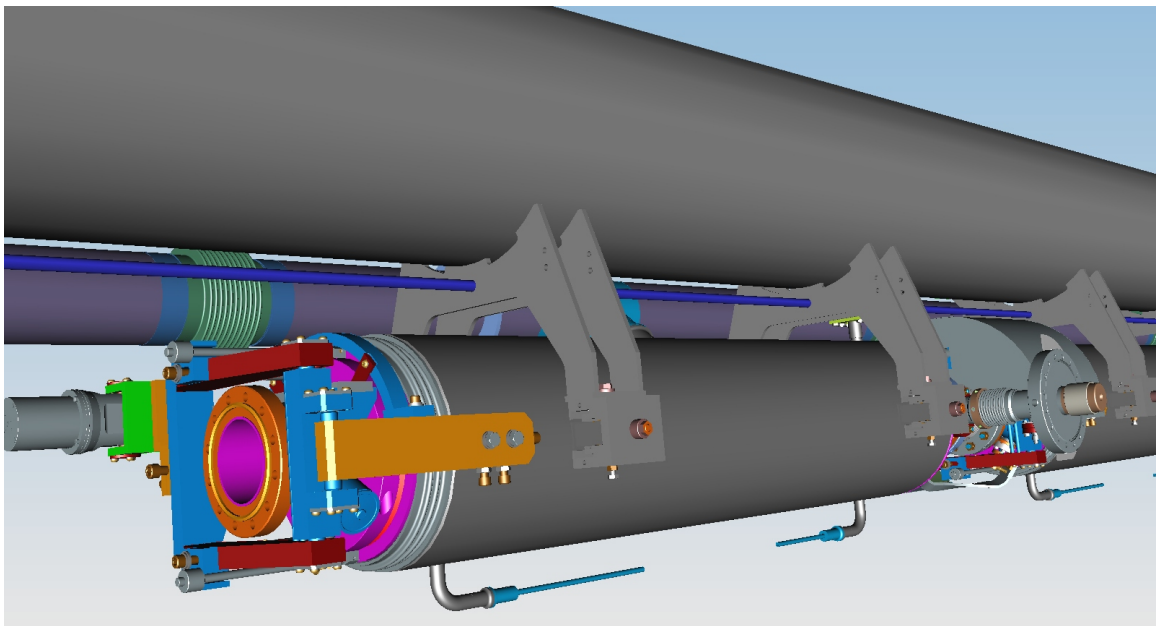

Figure 4. Dressed cavity as part of the cavity string within a cryomodule for LCLS-II. Other features shown include the RF power coupler for one cavity, an end lever tuner for an LCLS-II dressed cavity, support arms for the dressed cavities, and the invar rod just below the HGRP which provides the axial position anchor for the dressed cavities.

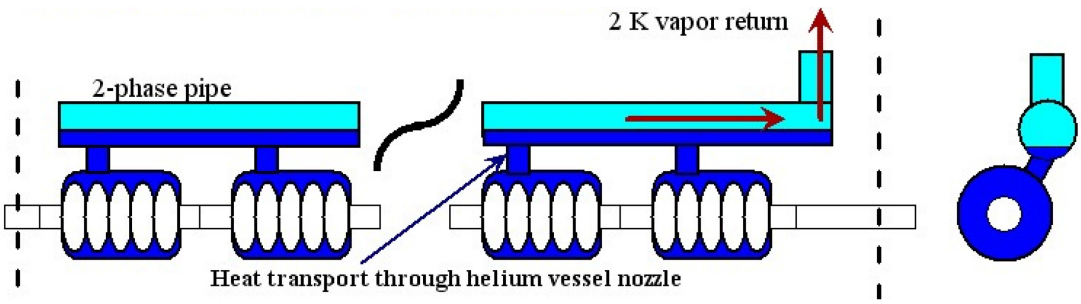

Figure 5. Cooling scheme for an ILC cavity string.

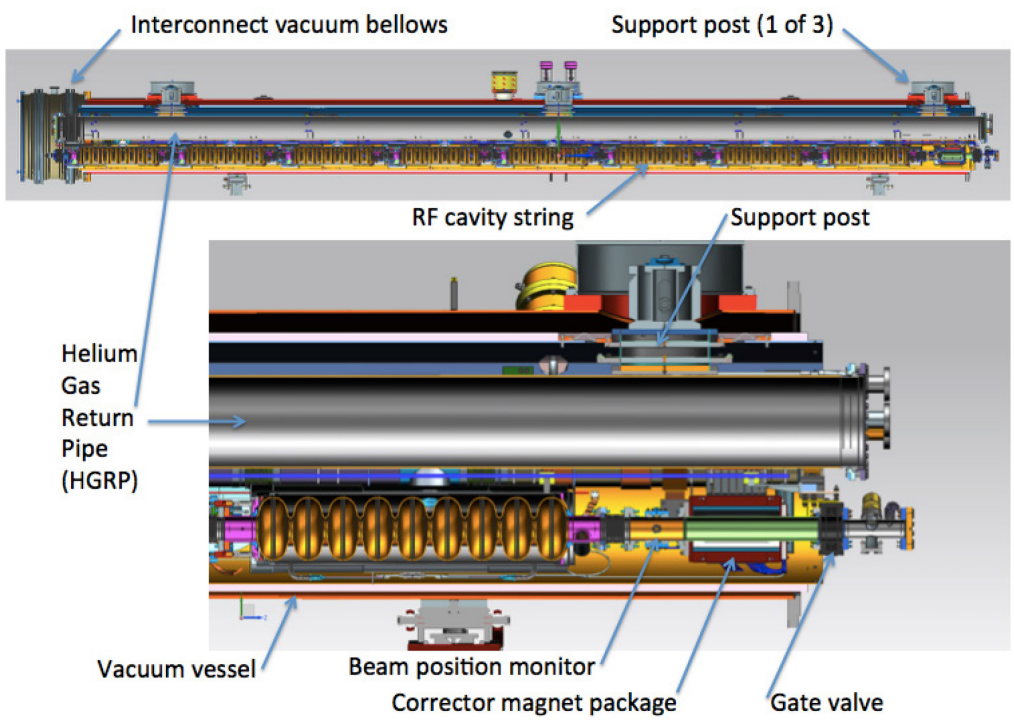

Figure 6. The above figure illustrates some major features of a TESLA/ILC-style cryomodule. This particular image is of an LCLS-II 1.3 GHz cryomodule assembly, but the features shown are typical of TESLA/ILC-style cryomodules. (Credit for figure – Fermilab)

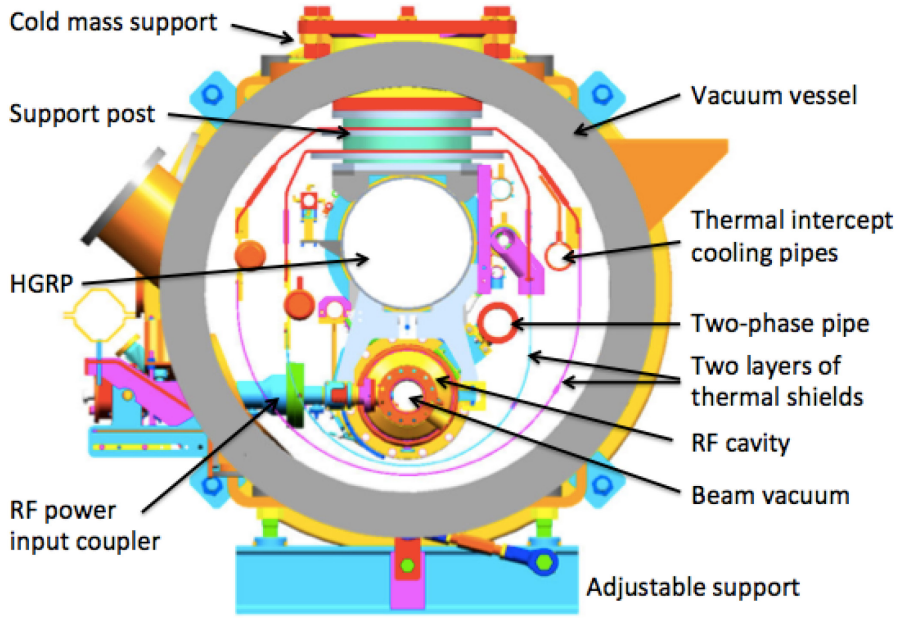

Figure 7. Cross-section of an ILC cryomodule showing major features which are typical of a TESLA-style cryomodule.

Magnetic shielding surrounds the dressed cavity in order to limit imposed magnetic field on the niobium superconductor. One must watch also for internal sources of magnetic fields. No component of the cryomodule should impose more than a specified low magnetic field (such as 5 milligauss, the specification for LCLS-II) on the niobium cavity during cool-down through the 9.2 Kelvin transition temperature, since trapped flux then reduces the efficiency of the RF cavity, resulting in higher heat loads at 2 Kelvin and/or limiting peak operating gradient of the cavity.

The 300 mm diameter helium gas return pipe (HGRP), prominently visible above the cavities in Figures 6 and 7 serves both as the "backbone" support for the RF cavity string in each cryomodule and also as the low pressure, 2 Kelvin, saturated vapor return line to the cryogenic distribution box. The HGRP is support by three epoxy-fiberglass posts [7, 8, 9]. To accommodate the HGRP thermal contraction when cold relative to the vacuum vessel, the two side post brackets can slide over the top flanges while the central post bracket is locked in position.

The support posts (see Figures 7 and 8) consist of a fiberglass tube terminated by two shrink-fit stainless steel flanges. Two additional shrink-fit aluminum flanges are provided to allow intermediate thermal intercept connections to the 5-8 K and nominally 70 K temperature levels; the exact location of these flanges has been optimized to minimize the heat leakage.

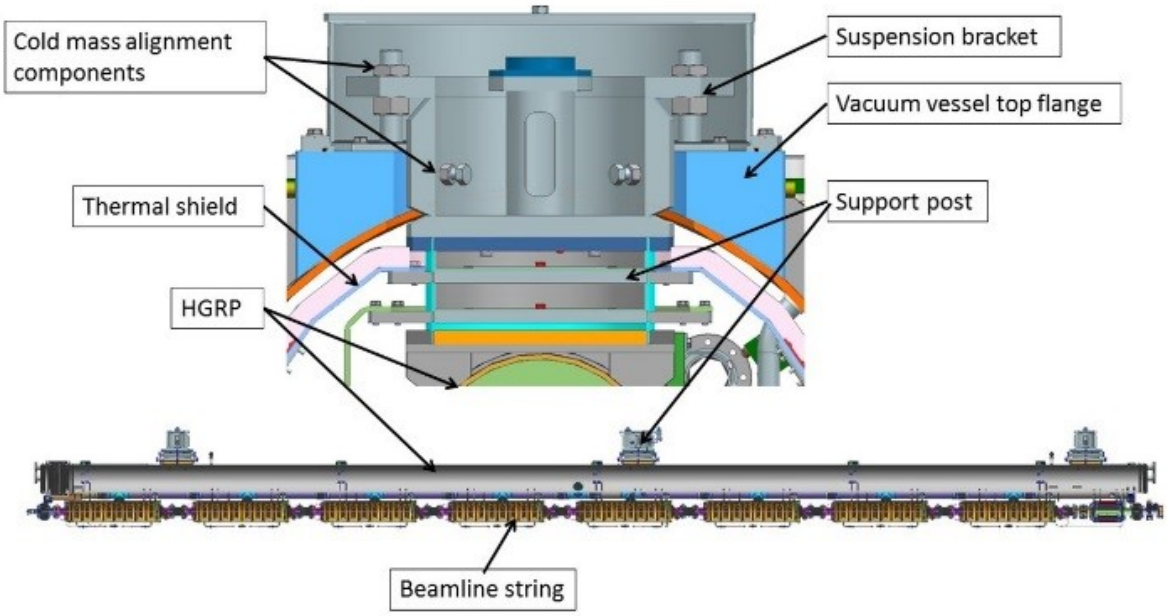

Figure 8: Cold mass support and alignment system. (Credit for figure – Fermilab)

RF cavities are supported from the HGRP by means of four lugs on the helium vessel. Stainless steel arms welded to the HGRP extend down to C-shaped holders containing needle bearings, shown in Fig. 9. The cavities are anchored in position longitudinally via a clamp to an invar rod. The needle bearings allow shrinkage of the stainless HGRP relative to the RF cavities and magnet package.

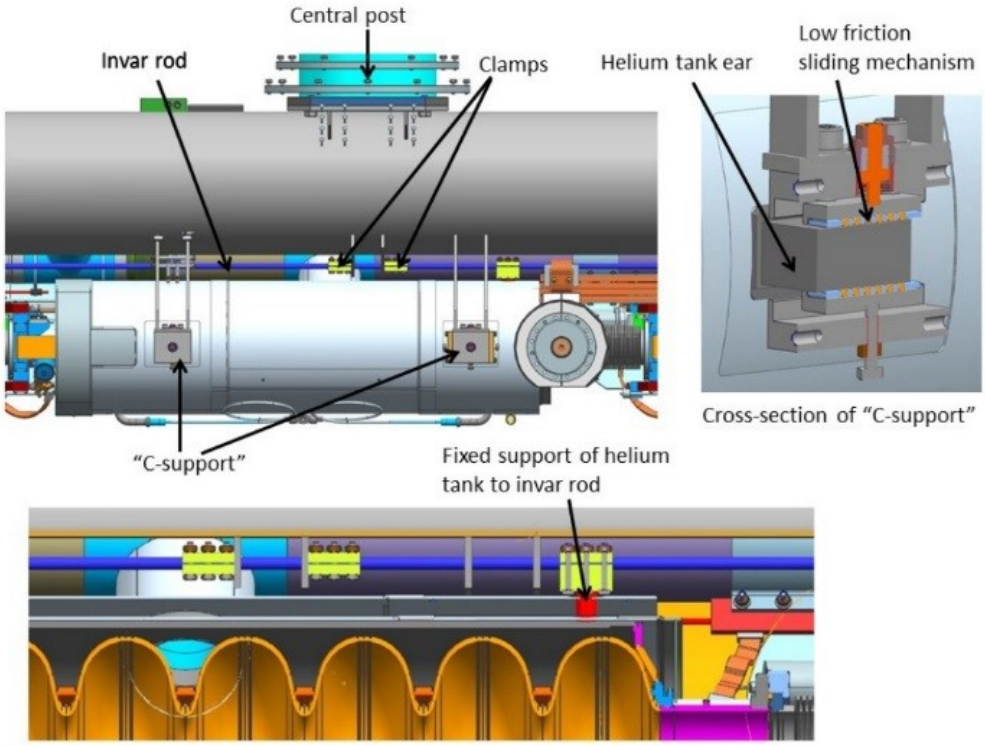

Figure 9: Support system of cavity helium tank to the HGRP and invar rod. (Credit for figure – Fermilab)

Cavity positions relative to fiducials on the vacuum vessel are set during assembly with no requirement for later internal adjustment of cavity position within the cryomodule after assembly. Alignment needs to be maintained with cryomodule transport, thermal cycling, and pressure cycling. (For example, return to position within 0.5 mm RMS tolerance for LCLS-II.) Final alignment requires positioning of the vacuum vessel assembly with reference to the external fiducials, which were in turn referenced to the cavity string. Table 3 summarizes approximate allocation of alignment tolerances, illustrating that for each source of misalignment, due to their additive nature, tolerances must be tighter than the overall requirement.

Table 3. Typical alignment tolerances for RF cavities within a cryomodule

	Subassembly	Tolerances (RMS)	Total envelope
Cryomodule assembly	Cavity and helium vessel	+/- 0.1 mm	Positioning of the cavity with respect to external reference +/- 0.5 mm
	Supporting system	+/- 0.2 mm	
	Vacuum vessel construction	+/- 0.2 mm	
	Action		
Transport, testing, and operation	Transport and handling (+/- 0.5 g in any direction)	+/- 0.2 mm	Reproducibility and stability of the cavity position with respect to external reference +/- 0.5 mm
	Vacuum pumping	+/- 0.3 mm	
	Cool-down		
	RF tests		
	Warm-up		
	Thermal cycles		

Linac beam operational requirements determine cryomodule lattice dimensions and intercavity spacing. Since the linac is operated cold, but the cryomodule is assembled warm, careful analysis of thermal contractions is required for the design of warm assembly dimensions. Key dimensions include main coupler cavity-to-cavity distance and cryomodule slot length.

RF power travels via waveguide and connections to the cryomodule input couplers. Various other electrical connectors are located on round cover plates mounted on the vacuum shell, the connector plates sealed with O-ring seals. A pair of instrumentation flanges is also associated with each input coupler to reduce wire lengths and risks associated with long runs of wires inside the cryomodule.

Figures 10 and 11 illustrate the region in the cryomodule around the superconducting magnet and one example (for a Type 3+ cryomodule) of a magnet package. Like for the RF cavities, the 300 mm diameter HGRP supports the superconducting magnet package, consisting of a quadrupole and two correction dipoles. Also like for the RF cavities, the invar (see Chapter 1) rod maintains the magnet package axial position, while the HGRP supports the magnet mass and provides lateral and vertical positioning. A beam position monitor is pinned to the magnet package for precise relative alignment of the two.

Current leads shown in Figures 10 and 11 are conductively cooled, based on the design developed by CERN for the LHC corrector magnet current leads [10]. Conductive cooling has the advantage of not requiring helium gas flow, which in these cryomodules one could not provide from the 2-Kelvin magnet coolant due to the low (nominally 30 mbar) pressure. Relatively low currents (100 A or less) enable the use of conductive cooling without too much heat input to the low temperature levels of the cryomodule.

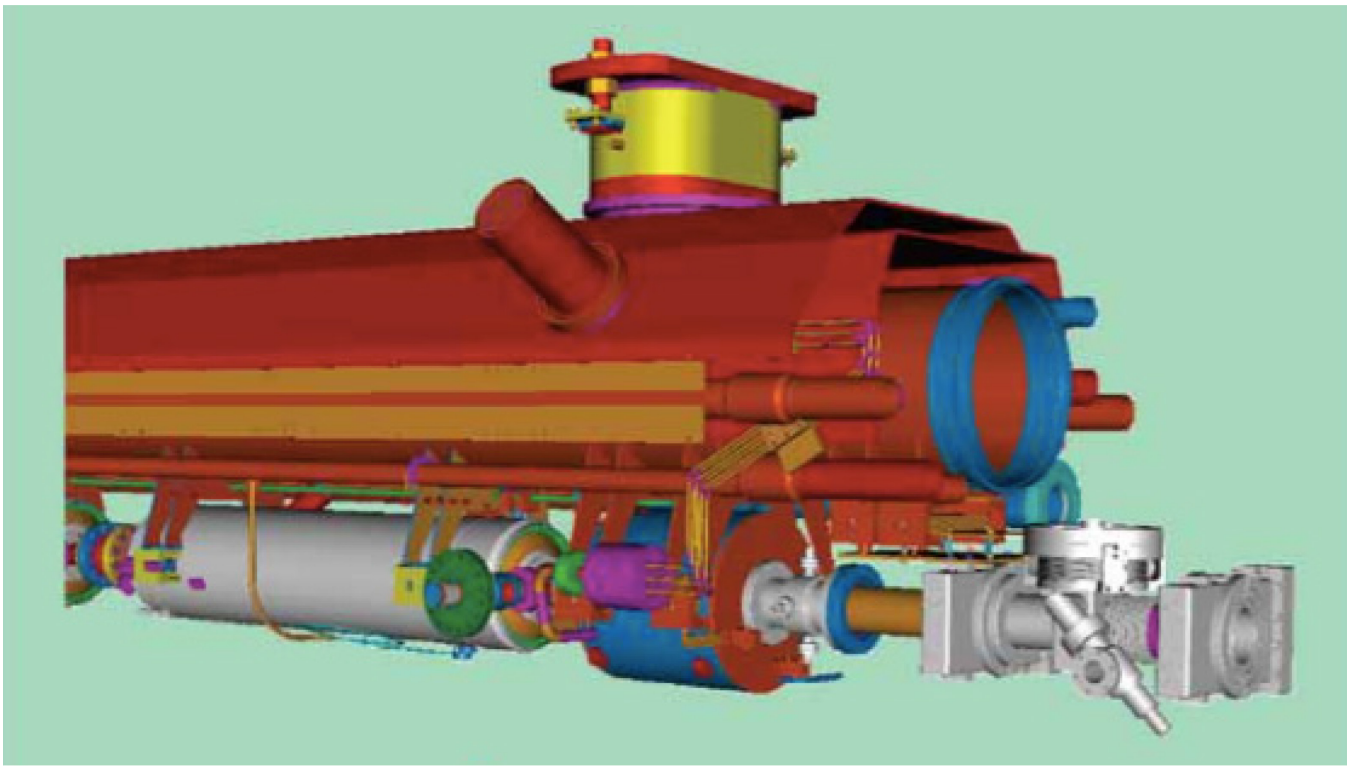

Figure 10. A “Type 3+” cryomodule, very similar to those for XFEL, showing from the left below the 300 mm pipe: the last dressed cavity in the string, the magnet package, BPM, gate valve, HOM absorber, and another vacuum gate valve. (Credit for image: XFEL TDR [5])

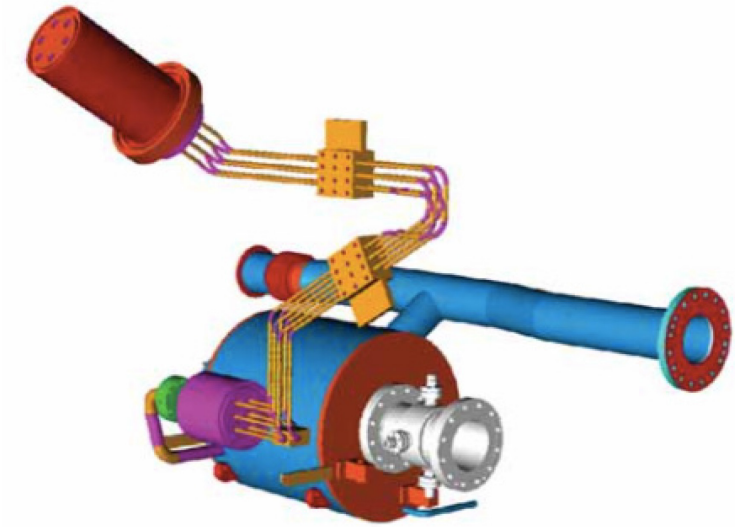

Figure 11. A Type 3+ cryomodule magnet package, showing current leads, helium vessel containing the magnet, beam position monitor attached to magnet end, and 2-phase pipe section associated with the magnet. (Credit for image: XFEL TDR [5])

The cryostat for TESLA, ILC, and XFEL includes two aluminum radiation shields operating in the temperature range of 5-8K and 40-80K respectively. For LCLS-II, the nominally 5 K thermal shield is eliminated although the helium circuit is retained to provide 5 K thermal intercepts for RF power input couplers, magnet current leads, support posts, and some RF cables. Thermal radiation shield bridges are provided through each cryomodule interconnect.

Blankets of multi-layer insulation (MLI) are placed on the outside of the thermal shields and other cold surfaces. At the nominally 70 K level, MLI blankets consist of typically 30 layers. At the 2 K and 5 K levels, MLI blankets consist of 5 to 10 layers while the nominally 70 K blanket contains 30 layers. Cavity and quadrupole helium vessels, gas return pipe and 5-8 K pipes are wrapped with 5 to 10 layers of MLI to reduce heat transfer in the event of a vacuum failure.

Thermal shields are constructed from a stiff upper part (divided into two halves), and multiple lower sections (according to the number of the cold active components, e.g. cavities, magnets). Intermediate flanges on the fiberglass posts support the thermal shields from the top. Thermal shields are screwed to the center post but can axially slide on the other two posts, to which they are still thermally connected, allowing for thermal contraction relative to the vacuum vessel. Slots cut into the thermal shields near cooling pipe attachments reduce bowing due to differential thermal contraction during cool-down and warm-up.

4.2. Cryomodule weight

Table 4, below, lists cryomodule component and total weights, in particular for the LCLS-II cryomodule. ILC would be very similar. The bottom line is 8600 kg for the cryomodule assembly.

Table 4. Approximate typical cryomodule mass (kg)

Cryomodule component	**Mass (kg)**
Cold mass (cavity string, thermal shield, HGRP, other cold pipes)	3300
Vacuum vessel	3300
End flanges, reinforcing rings	300
HGRP supports (posts, brackets, support covers, 3 sets)	900
Other items (vacuum bellows, external support base, power couplers, instrumentation, etc.)	800
TOTAL	8600

4.3. Major interfaces

Major interfaces from the cryomodule to other linac components include a wave guide connection to the RF power input coupler, instrumentation connectors, magnet power

lead connections, the anchors from the adjustable supports to the floor, pump connections to the insulating vacuum pump-out ports, and may also include guard helium vacuum connections for helium-shrouded subatmospheric connections.

5. Cryomodule vacuum design and vacuum vessel

The cryostat outer vacuum vessel is constructed from carbon steel and, for these TESLA-style cryomodules, has a standard diameter of 38 inches. Adjacent vacuum vessels are connected to each other by means of a cylindrical sleeve with a bellows, sealed to each cryomodule end by an O-ring vacuum seal. In the event of accidental spills of liquid helium from the cavity vessels, a relief valve on the sleeve together with venting holes on the shields prevent excessive pressure build-up in the vacuum vessel.

Wires and cables of each module pass through the vacuum shell via metallic sealed flanges with vacuum tight connectors. The insulating vacuum system is pumped during normal operation by permanent pump stations located at appropriate intervals. Additional pumping ports are available for movable pump carts, which are used for initial pump down, and in the event of a helium leak. Due to isolation of the cavity vacuum at the RF power coupler by means of a ceramic window, the RF power coupler typically needs an additional vacuum system on its room temperature side; this is provided by a common pump line for all couplers in a module, which is equipped with an ion getter and a titanium sublimation pump.

A new feature for the LCLS-II cryomodules in particular is access ports for the tuners, serving to provide access to the piezo tuners within the cryomodules. This feature eliminates the need to pull the entire cold mass string out of the vacuum vessel in order to access tuner components.

The insulating vacuum is protected from over pressurization by means of a spring-loaded lift plate. A single worst case piping rupture internal to the insulating vacuum must be analyzed to determine lift plate size. Provisions are provided to allow free passage of the helium out past thermal shield and MLI to the lift plate, which is typically 200 mm to 300 mm in diameter.

The cavity (beam) vacuum must be kept very clean and particle free. The vacuum gate valves shown in Figure 12 provide beam vacuum isolation during cryostat assembly and interconnect assembly. In the linac, beam vacuum pumping and readouts are provided at warm beamline sections. Warm beamline vacuum components adjacent to the cryomodule cold beam vacuum must be clean and particle free to avoid contamination of the cavity vacuum. Pumping may be provided by Titanium sublimation pumps, with these at the ends of cryomodule strings providing “guard” pumping to reduce cryopumping of the warm beamline into the cold RF cavity vacuum. Ion pumps may provide vacuum readout

6. Cryomodule thermal design and helium flow design

6.1. Major thermal design features

The RF cavities are maintained at nominally 2 K by means of a stagnant bath of saturated liquid helium. Temperatures of 1.8 K to 2.1 K are feasible in a large system, and the RF cavity helium vessel and piping design accommodate any temperature within this range. The 2 Kelvin helium is supplied by a pressurized, nominally 2 K line, to the cryomodule or string liquid level control valves.

A nominally 5 Kelvin cooling circuit will typically incorporate pressures above the helium critical pressure (2.27 bar) so as to avoid 2-phase flow. Although no phase change takes place as the supercritical helium warms, in the temperature range of 5 K to 8 K as much as 30 J/gram may be absorbed, comparable to that of a phase transition. A 5 K circuit provides low temperature thermal intercept for the support posts, magnet current leads, RF power coupler, HOM absorbers, and instrumentation wires. Unlike the concept for ILC and the design of XFEL, CW cryomodules typically have no thermal radiation shield at this temperature level since RF losses already provide 10's of Watts or more per cryomodule at the 2 Kelvin level.

The highest temperature level will be helium in the range 35 K to 85 K or perhaps liquid nitrogen at around 80 K. This temperature level provides not only conductive thermal intercepts but also a thermal radiation shield. At many institutions, there will be no liquid nitrogen in the tunnel, implying the use of a gaseous helium circuit. However, often for test purposes in various test cryostats and facilities, as well as in some accelerators, the "70 K" thermal shield may be cooled with liquid nitrogen at approximately 80 K. This higher temperature will have some impact on thermal loads at the lower temperatures which should be assessed.

The thermal shield must be designed such that introduction of cold (process temperature) helium into the thermal shield piping when the thermal shield is warm, resulting in a very fast cool-down, does not damage the thermal shield or other parts of the cryomodule. (The issues are warping and associated forces, thermal stresses, etc.) Slots cut into the thermal shield perpendicular to the trace piping allow thermal contraction of the pipe ahead of thermal shield cooling. Thermal shield trace piping is arranged such that counterflow heat transfer does not inhibit cool-down of the thermal shield.

Heat loads for early TESLA-style cryomodules are summarized in section 8, below. Special considerations for the high heat loads at 2 K with CW operation are described in section 8.2 of this document.

Evacuated multi-layer insulation (MLI) is used within the cryomodule on the thermal radiation shield, piping, and helium vessels. MLI on colder piping and vessels under the thermal radiation shield, while not very effective in terms of reducing overall heat load, greatly reduces boiloff rates from loss of vacuum incidents, in turn reducing emergency venting pipe and valve size requirements.

Each helium vessel includes an electric heater for 2 K flow and pressure control. In order to avoid cold feed-throughs from superfluid helium to insulating vacuum, these heaters are installed on the outsides of the helium vessels. The presence of a steady-state pressure drop results in a pressure change at the cryomodule with a change in flow rate (e.g. due to heat load change or liquid level control valve position change), even with constant cold compressor inlet pressure (perfect cryoplant pressure regulation). Heaters

distributed within the cryomodules are required to compensate for heat load changes so as to control subsequent flow and pressure changes.
Cables are thermally intercepted at the 70 K level. Special attention is given to thermal intercepting of the piezo actuator wires and housing so as to assure piezo temperatures remain below 80 K, to improve lifetime and performance. Input coupler thermal intercepts are provided at 5 K and at 70 K.
Figure 12 illustrates the cryomodule cross-section and cryogenic circuit labels. Figure 13 shows the cryomodule flow scheme. The large-scale cryogenic system concept for TESLA is described in [11, 12].
Line A, the 2.2 K supply line, provides helium above the critical pressure (above 2.2 bar), so single-phase flow at all temperatures, to the liquid level control valves which maintain the saturated 2 Kelvin liquid level in the 2-phase pipe over the RF cavities.
Lines C and D are the low temperature helium thermal intercept supply and return lines.
Lines E and F, similarly, are the higher temperature thermal intercept (and thermal shield) supply and return lines.
Line H, the warm-up/cool-down line, provides helium to capillary tubes which supply the bottom of each helium vessel, allowing parallel warm-up or cool-down of the string of helium vessels.
Lines passing through cryomodule interconnects are all welded, the only mechanical seals being the vacuum O-rings and all-metal beam tube vacuum seals.

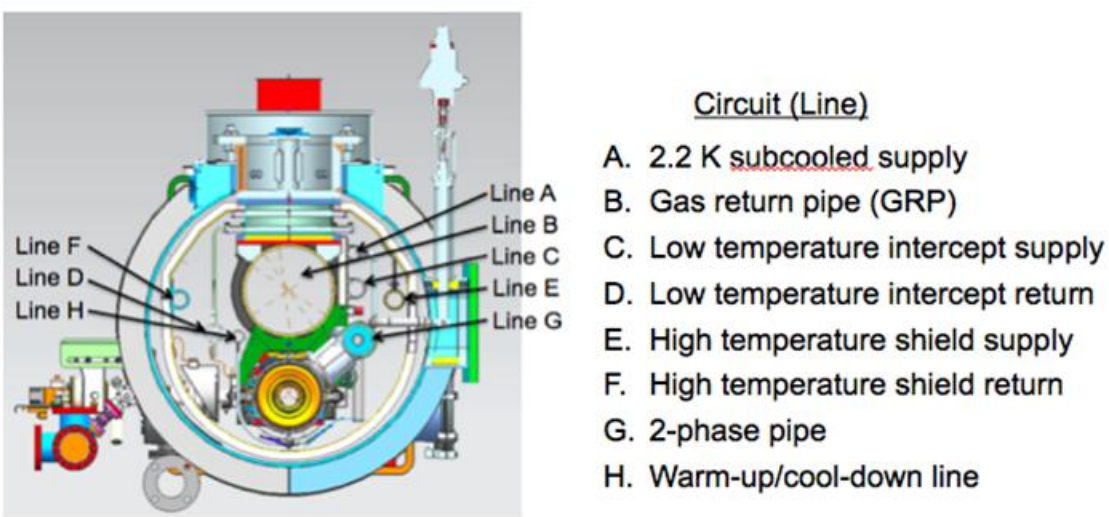

Figure 12. LCLS-II cryomodule assembly cross-section

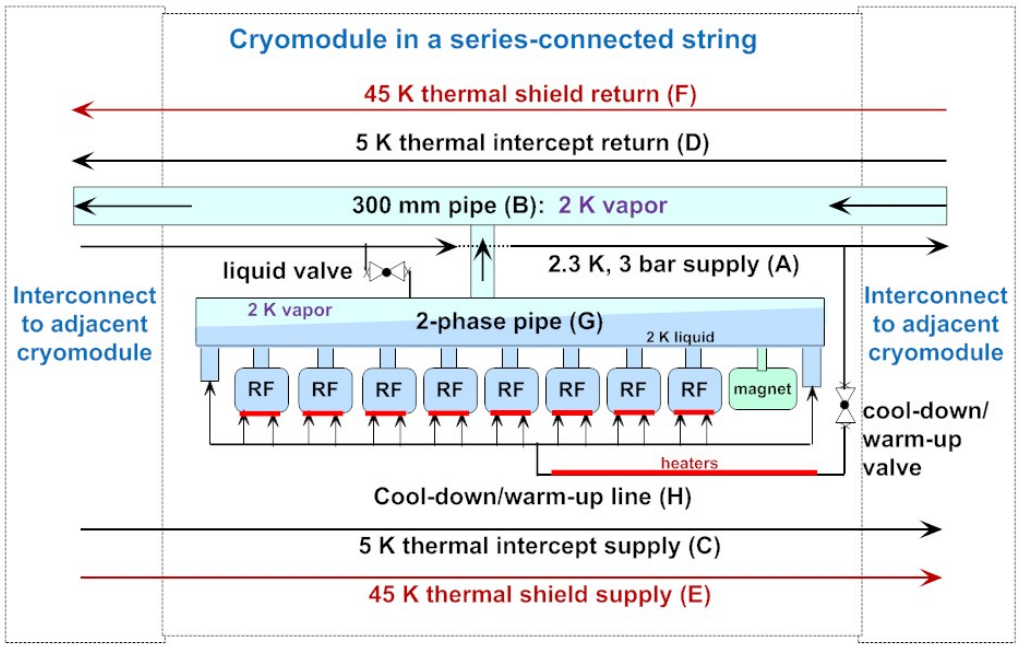

Figure 13. LCLS-II 1.3 GHz cryomodule schematic. For ILC, the 2-phase pipes and cool-down pipes are connected in series through a string of cryomodules.

6.2. Design for large 2 K heat transport and helium flow

Heat from the outside surface of the niobium RF cavity, and heat entering via conduction from the beam pipe at the RF cavity ends, is carried through stagnant saturated Helium II to the liquid helium surface in the 2-phase pipe via superfluid heat transport. For heat transport through saturated superfluid helium around 2.0 Kelvin, 1 Watt/sq.cm. is a conservative rule for a vertical pipe [13, 14].

The critical heat flux for a non-vertical pipe connection from the helium vessel to the 2-phase pipe may be considerably less than 1 Watt/sq.cm. [Figure 14.] Configurations other than vertical require analysis to verify that the anticipated heat flux is less than the critical heat flux. Also, temperatures above 2.0 K result in a lower critical heat flux due to reduced superfluid heat transport. For LCLS-II, these considerations have resulted in our increasing the inner diameter of the nozzle (or "chimney") from the helium vessel to the 2-phase pipe from 55 mm (the TESLA/XFEL size) to 95 mm.

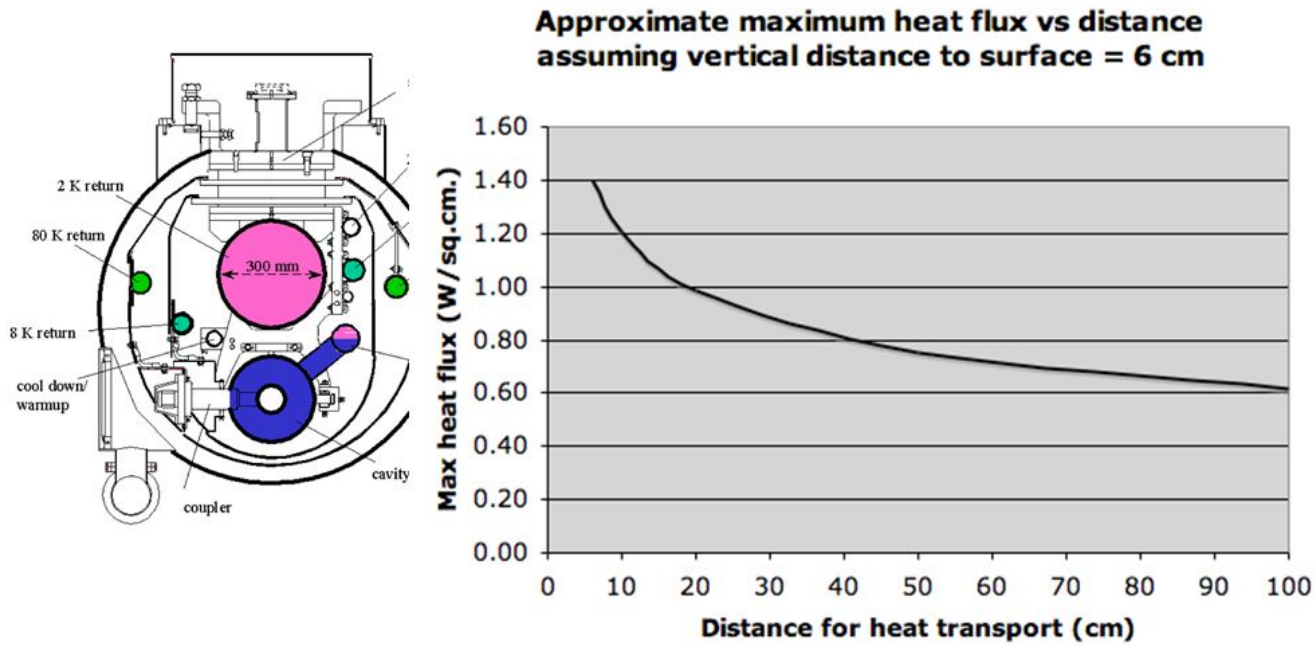

Figure 14. Maximum heat flux in saturated superfluid at 2.0 Kelvin

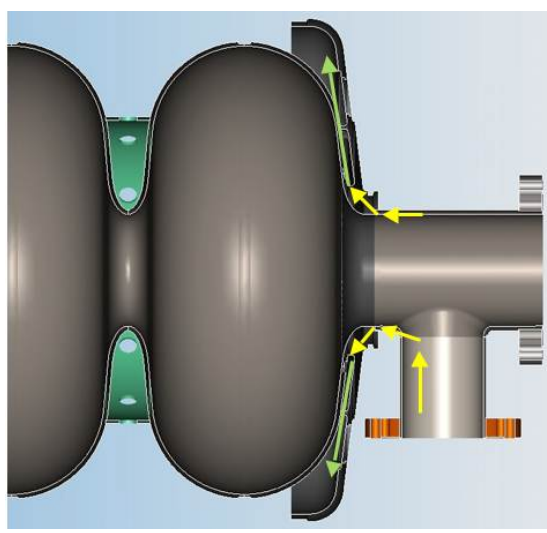

Figure 15. Heat transport path from input coupler and beam tube region to 2 K helium

End flange to cavity including support tabs must have sufficient helium cross-sectional area to carry heat from the cavity ends and beam tube into the bulk helium in the helium vessel (Figure 15). Arrows indicate conduction through end of power coupler outer conductor and beam pipe followed by heat transport through a thin layer of liquid helium at the end of the first cavity cell.)

Evaporation from the surface of the saturated helium liquid results in vapor flow within the 2-phase pipe over the liquid surface to an exit port connecting to the HGRP. Studies done at CEA Grenoble for CERN's LHC magnet cooling [15] provided the result that a 5 meters/sec vapor "speed limit" over liquid is a conservative "rule of thumb" not to entrain

liquid droplets into the vapor. For LCLS-II, the closure of each 2-phase pipe in each cryomodule, limiting the 2-phase pipe vapor flow to that generated by one cryomodule, keeps the vapor flow rate quite low, less than 2 meters/sec. Nevertheless, the 0.5% slope (Figure 16) combined with the fact that the connecting nozzle from the helium vessel is 100 mm OD results in a 100 mm OD 2-phase pipe, larger than the 69 mm for XFEL. The result is that the pressure drop within the 2-phase pipe is negligibly small (Figure 17).

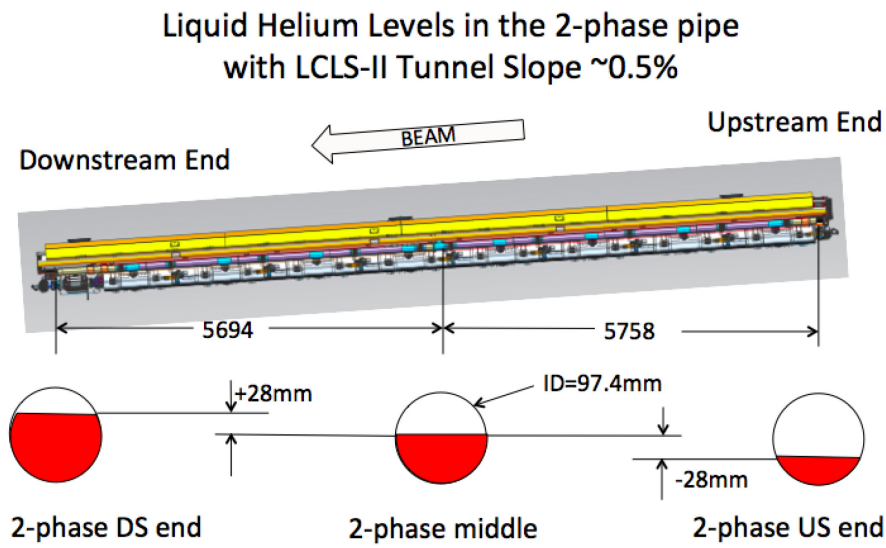

Figure 16. Liquid level illustration for single LCLS-II cryomodule (Credit for figure – Fermilab)

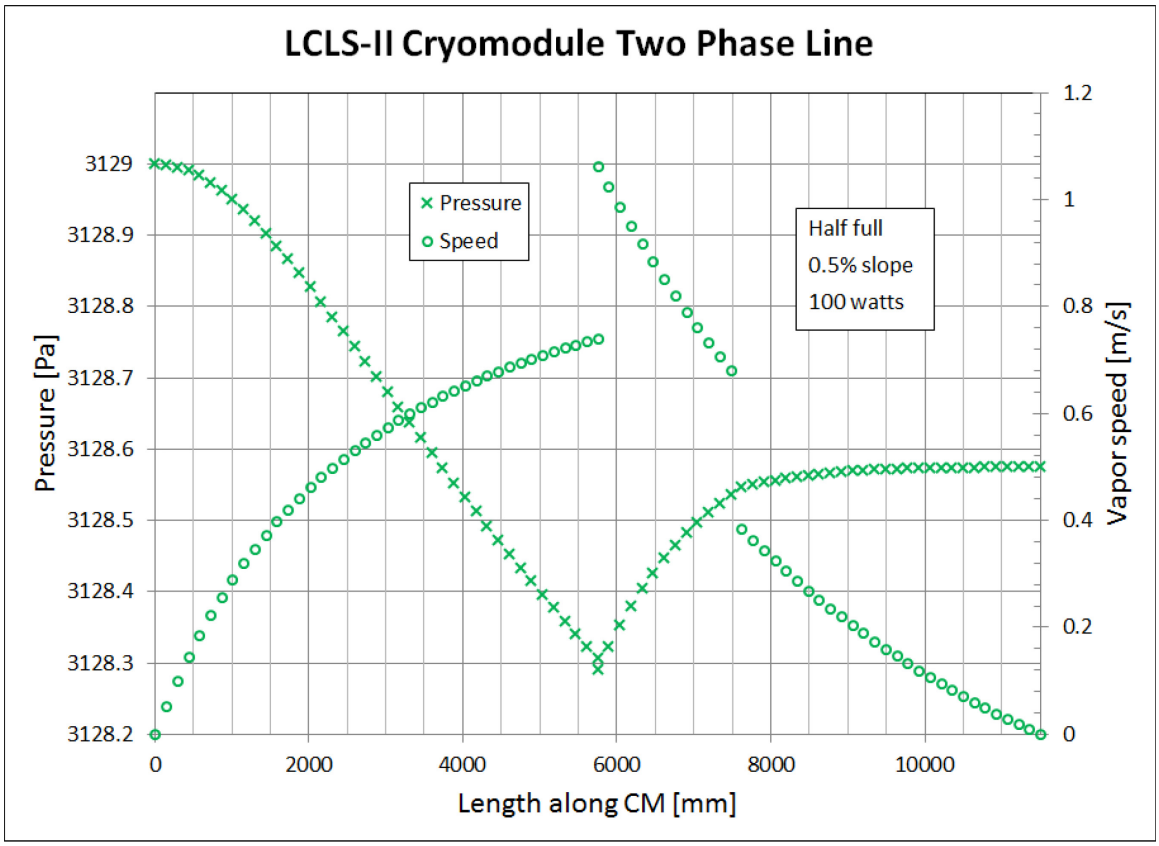

Figure 17. Pressure drop and vapor velocity in 2-phase pipe in a single cryomodule. The vapor exits from the 2-phase pipe at the 5700 mm central location. Liquid helium is added, with some vapor also, at the 7500 mm location. The asymmetry of vapor speed and pressure drop is due both to the off-center input of the 2-phase flow and a 0.5% upward slope from left to right in the figure. (Credit for analysis and plot – Joshua Kaluzny, Fermilab, and Joel Fuerst, Argonne National Laboratory)

6.3. Pressure drop analyses

Pressure drops within and through the cryomodule must be analyzed in combination with the helium distribution system. Pipes are sized for the worst case among steady-state, peak flow rates, upset, cool-down, warm-up, and venting and conditions. Pressure drops must be analyzed for each helium flow path to ensure that steady-state operation matches system design and that non-steady conditions (cool-down, emergency venting, warm-up) are properly handled. Input variables for these analyses include line size, allowable temperature rise, allowable pressure drop, and heat load. (Temperature rise and heat load determine mass flow for supercritical pressure helium or helium gas in the thermal intercept pipes and 2 K supply pipe.)

For the HGRP, pressure drop is particularly important and limited, since this pressure drop determines the helium temperature at the helium vessel, hence RF cavity temperature. We design for a pressure drop < 10% of total pressure in normal operation.

Maximum allowable pressure for emergency venting, combined with distances to relief devices may also influence line sizes [16]. Helium piping and vessels vent into the adjacent cryomodules and out to the distribution system, allowing placement of all process relief valves in the distribution system.
Loss of vacuum venting: pressure in the helium vessel of the dressed cavity less than the cold maximum allowable working pressure (MAWP) of the helium vessel and dressed cavity. Venting path includes nozzle from helium vessel, 2-phase pipe, may include gas return pipe, and also includes any external vent lines. Worst-case heat flux to liquid helium temperature metal surfaces with loss of vacuum to air is assumed to be 4.0 W/cm^2. Worst-case heat flux to liquid helium temperature surfaces covered by at least 5 layers of multi-layer insulation (MLI) is assumed to be 0.6 W/cm^2.
Finally, we match cryomodule and cryogenic distribution system design to the cryogenic plant in terms of providing flow rates, temperatures, and pressures consistent with cryogenic plant requirements.

Table 5. Cryomodule pipe size comparison

Pipe function	**pipe name (Fig 12)**	**TTF inner diameter (mm)**	**XFEL inner diameter (mm)**	**ILC inner diameter (mm)**	**LCLS-II inner diameter (mm)**
2.2 K subcooled supply	A	45.2	45.2	60.2	54.8
Gas helium return header, structural support	B	300	300	300	300
5 K shield and intercept supply	C	54	54	56.1	54.8
5 K shield and intercept return	D	50	65	69.9	50.8
High temperature shield and intercept supply	E	54	65	72.0	54.8
High temperature shield and intercept return	F	50	65	79.4	52.5
2-phase pipe	G	72.1	>72.1	69.0	97.4
Helium vessel to 2-phase pipe nozzle (“chimney”)		54.9	54.9	54.9	95
Warm-up/cool-down line	H			38.9	38.9

6.4. Typical TESLA-style cryomodule maximum allowable working pressures

Table 6. Maximum allowable working pressures for typical TESLA-style cryomodules

Region	Warm MAWP (bar)	Cold MAWP (bar)
2 K, low pressure space	2.05	4.1
2 K, positive pressure piping (separated by valves from low P space)	20.0	20.0
5 K piping	20.0	20.0
45 K piping	20.0	20.0
Insulating vacuum space	1 atm external with full vacuum inside 0.5 positive differential internal	
Cavity vacuum	2.05 bar external with full vacuum inside 0.5 positive differential internal	4.1 bar external with full vacuum inside 0.5 positive differential internal
Beam pipe vacuum outside of cavities	1 atm external with full vacuum inside 0.5 positive differential internal	1 atm external with full vacuum inside 0.5 positive differential internal

6.5. Instrumentation

The cryomodule must be instrumented with liquid level probe (or probes) for the 2-phase helium II system when level control is incorporated into each cryomodule, thermometry for cool-down and monitoring of critical input coupler, HOM coupler, and current lead temperatures, and other instrumentation. Table 7 lists possible instrumentation for a CW electron linac cryomodule.

Table 7. Example of cryomodule instrumentation for a CW electron linac cryomodule (LCLS-II). Production cryomodules may have a reduced set of necessary instrumentation.

Sensor Description	Quantity & Location
Piezo Actuators (Fast Tuners)	Typically 2 or 4 per tuner
Stepper Motors	One stepper motor per tuner
Embedded Platinum Temperature sensors on the stepper motors	One for each stepper motor
Cavity Field Probes – Transmitted Power	1 field probe per cavity

HOM Field Probes – Transmitted Power	1 on each HOM x 2 HOMs per cavity
Coupler Electron Pick-ups	2 Pick-ups per cavity (1 is mounted on the cavity side of the coupler and 1 is mounted on the wave guide side of the coupler).
Helium Vessel Cernox RTDs	1 RTD at each cavity
Main Coupler Platinum RTDs	2 RTDs at each cavity (1 at 12 o'clock & 1 at 10 o'clock).
Beam Position Monitor (BPM)	1 BPM per cryomodule – 4 pick-ups
Coupler Tuner Motors	1 stepper motor, 2 limit switches, and 1 potentiometers for each main coupler (if remote coupler tuning is incorporated)
Cool Down Temperature Sensors	2 at the bottom of the 5K shield and 3 inside the 300mm pipe at each end
Cool Down Temperature Sensors	2 RTDs – mounted on the bottom of the 70 K
HOM Coupler RTDs	2 RTDs on each HOM coupler
BPM Pick-Up Temperature Platinum RTDs	2 Platinum RTDs – 1 primary and 1 redundant.
Quadrupole and Corrector Coil Voltage Taps for coil quench protection.	6 VT's (3 Pairs) – 2 VT's for the quad, 2 Vt's for each of 2 correctors.
Quadrupole and Corrector Coil cold mass temperature sensors	1 RTD for each coil package x 4 coil packages
Quadrupole and Corrector Coil wire heater	1 wire Heater – 1 heater for the entire coil package.
Quadrupole and Corrector Coil Voltage Taps for power lead quench or current protection	2 voltage taps / current lead x 2 leads /coil
Quadrupole and Corrector Coil lead RTDs	2 at 4K region, 2 on 4K intercept, 1 on 4k-70K region, and 1 at 70K intercept
Helium Vessel Heaters	1 electric heater per helium vessel
Magnetic Sensors	Optional, typically for R&D or prototype
Beam Loss Monitor	Depends on linac requirements
Liquid Level Sensors	If cryomodules have individual liquid levels

6.6. Cryomodule test requirements.

At least some fraction of cryomodules are typically tested prior to installation for the following:

- Leak and pressure tests for quality assurance and pressure code compliance.
- Temperature profiles
- Approximate heat loads
- RF cavity performance
- Tuner performance

- Instrumentation

6.7. Pressure stability at the 2 K level

It is possible to generate pressure pulses within a cryomodule, for example via heat input from the warm end of a closed pipe. Hence, one should try to avoid "dead-headed" lines which can warm up, for example, the line terminating at the cool-down valve after it is closed. To avoid a warm valve providing such a warm termination on the closed pipe, one solution is to locate the valve lower than the supply pipe such that cold helium sits on the valve.
The relatively large vapor volume contained in the HGRP combined with the use of helium II result in an inherently stable pressure, since pressure fluctuations are not only damped by the large vapor volume, but helium II heat transport supports liquid-vapor equilibrium at saturation temperature. An advantage of helium II, aside from the tremendous heat transport capability, is this inherent pressure stability, which in turn reduces the problem of helium pressure fluctuations affecting cavity resonant frequency.

7. Cryomodule helium inventory

Table 8 lists cryomodule helium inventory for the various lines and volumes. Note that most of the helium mass is contained in the helium vessels, the liquid around the RF cavities. Depending on how liquid level is managed, there may also be additional liquid helium in the 2-phase pipe. The large volume of the 300 mm pipe, filled with low-pressure helium vapor, provides a nice buffer to damp pressure fluctuations and to receive helium gas with sudden boiling due to some off-normal condition.

Table 8. ILC cryomodule line sizes, helium conditions, and helium inventory

Location	State	Temp (K)	Pressure (bar)	Pipe ID (mm)	Density (kg/m3)	Volume (liters)	Mass (kg)	Equiv liquid (liters)
One helium vessel	liquid	2.00	0.031		145.700	23.0	3.35	26.8
9 helium vessels	liquid	2.00	0.031		145.700	207.0	30.16	241.3
2-phase pipe	vapor	2.00	0.031	69.0	0.830	47.3	0.04	0.3
2 K supply pipe	subcooled	2.40	1.200	60.2	147.800	36.0	5.32	42.6
300 mm pipe	vapor	2.00	0.031	300.0	0.830	893.9	0.74	5.9
5 K supply	supercritical	5.00	5.000	56.1	129.000	31.3	4.03	32.3
8 K return	supercritical	8.00	4.000	69.9	30.760	48.5	1.49	11.9
40 K supply	gas	40.00	16.000	72.0	18.460	51.5	0.95	7.6
80 K return	gas	80.00	14.000	79.4	8.220	62.6	0.51	4.1
Warmup line	vapor	2.00	0.03	38.9	0.830	15.0	0.01	0.1
TOTALS								
One module						1393	43	346
Short string	9 modules					12538	389	3115
Avg cryo unit	21 short strings (system on one cryogenic plant)					263288	8177	65414

8. Early results from the TESLA cryomodules

The ILC cryomodule design evolved from the cryomodules designed for the TESLA (TeV Superconducting Linear Accelerator) project in the 1990's. [1] Early experimental results from these cryomodules led to design improvements seen in the ILC cryomodules and also illustrate several important features of cryostat design.

Table 9 shows the predicted and measured static heat leak for first two TESLA cryomodules built and tested. [17]

Table 9

Predicted & Measured Static Heat Leak For TESLA Cryomodules # 1 and #2 [17]

Temperature Level	Predicted Heat Leak (W)	Measured Heat Leak (W) Cryomodule #1 (alone)	Measured Heat Leak (W) Cryomodule #1 (with #2)	Measured Heat Leak (W) Cryomodule #2
70 K	76.8	90	81.5	77.9
4.5 K	13.9	23	15.9	13
2 K	2.8	6	5	4

Notice that the measured heat leak of cryomodule #1 significantly exceeds the predicted static at all three temperature levels with the 2 K heat load being more than twice the predicted value. The explanation of a significant part of this discrepancy can be seen in Figure A. Look first at the upper part of the figure. This shows the measured temperatures at various points on both the 70 K and 5 K thermal shields and the support posts. Notice on the right side of the figure that sensors on the innermost (5 K) thermal shield indicate temperature of 13 – 17 K rather 6 to 7 K as shown on the rest of the shield. This result is indicative of an increased heat load to that shield in that location. Cryomodule #1 was instrumented with a stretched wire measurement system that allowed real time monitoring of the position of the superconducting cavities so that the support system could be verified to meet the alignment requirements (see below). This measurement system included large numbers of instrumentation wire connecting the 2 K system to room temperature. In cryomodule #1, there was inadequate heat sinking of the wires at the 70 K level and thus much more heat than predicted was deposited at the 5 K shield level and at the 2 K level. There was also found to be issues with the proper treatment of the MLI penetrations (see Chapter 1) at the power coupler ports; which also added to the static heat leak.

Prior to the later test of cryomodule #1 with cryomodule # 2, some of the issues above were addressed and as a result the heat leak performance of Cryomodule #1 improved somewhat. Cryomodule #2 was constructed with far fewer instrumentation wires associated with the stretched wire system and those that remained were better heat sunk. Examining the lower part of Figure 18, which shows the shield temperature

distribution of cryomodule #2 shows the impact of these changes. The temperatures at the right side of the 5 K thermal shield have been reduced and are much closer to the nominal 5 K level. This result is also reflected in Table 9. The measured heat leak for cryomodule #2 is within predictions for the 4.5 K level and much closer to predictions for the 70 K and 2 K levels. Based on these experiences, later ILC cryomodules have been built that meet the predicted static heat loads [18]

Figure 18

Temperature Measurements of the Thermal Shields & Support Posts for TESLA Cryomodule #1 & Cryomodule 2 [17]

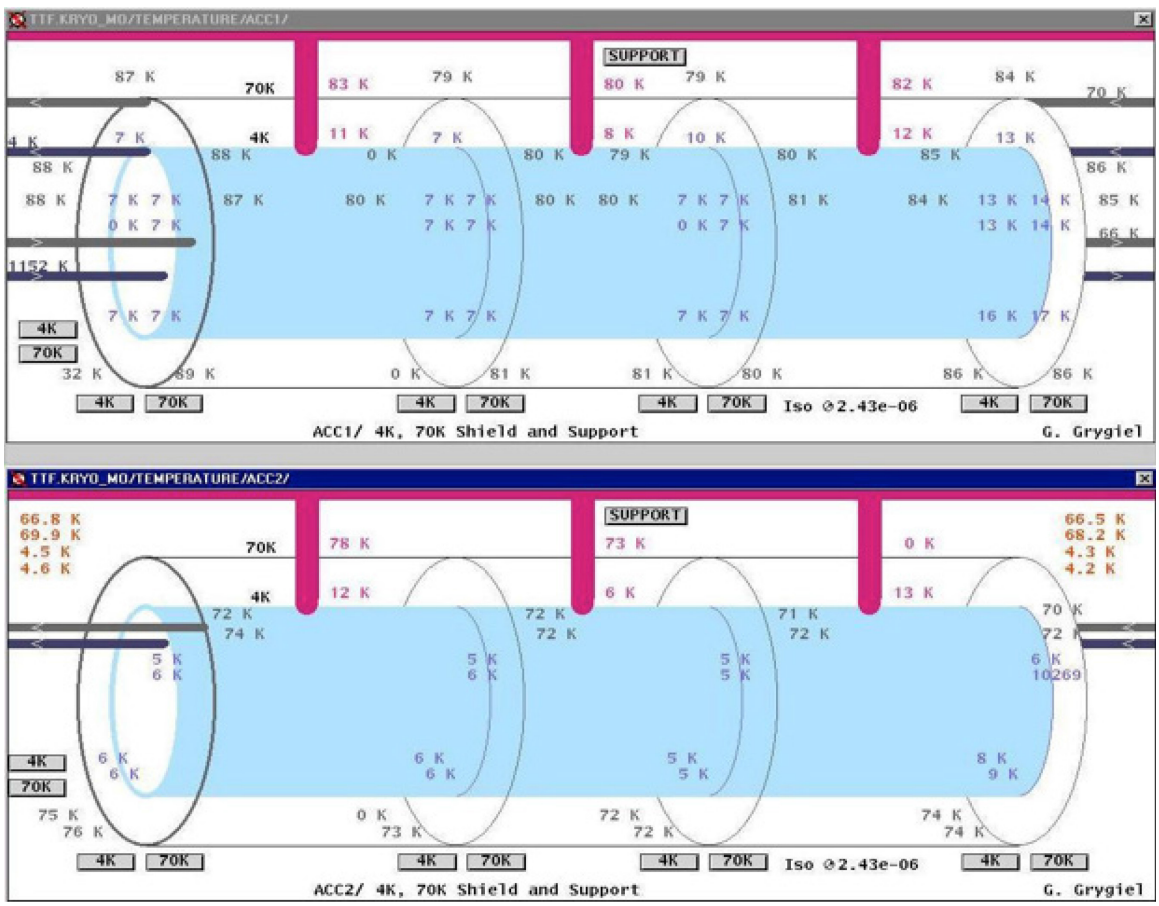

The story above illustrates the importance, as described in Chapter 1, of careful design and heat sinking of instrumentation wires and of the need for proper installation of MLI in penetrations.

The stretched wire system [19] that caused early heat leak problems did however, provide very useful data on the performance of the support system. Figure 21 shows the results of the displacement of the wire position monitors (WPMs) of the stretched wire systems between room temperature and cryogenic temperatures for cryomodule #2.

Figure 19

WPM displacement between room temperature (1/11/98) and 2 K for two separate cool downs (1/2/99 and 22/3/99) [17]

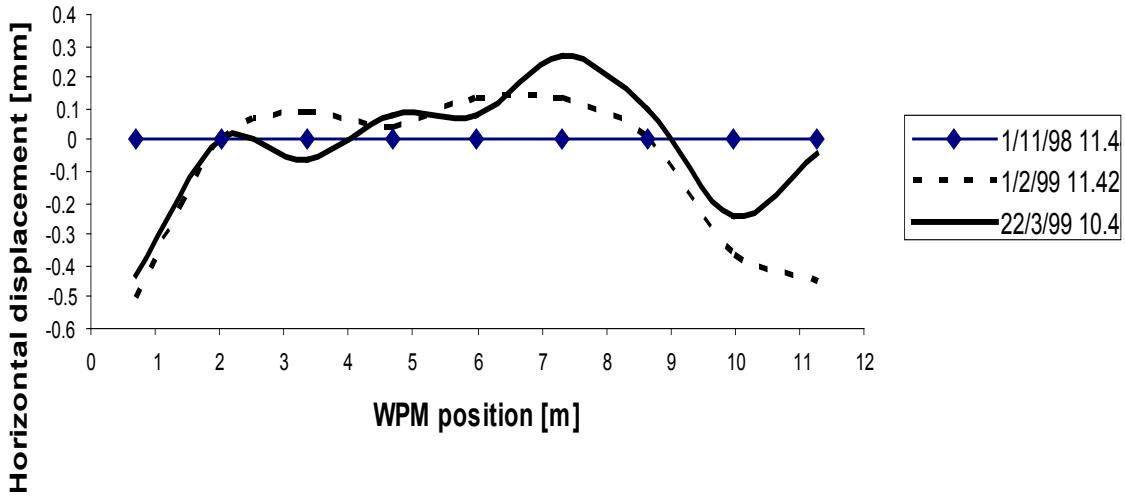

The various WPM positions are correlated to various cavity and magnet locations wthin the cryomodule. WPM positions 1 - 10 represent SRF cavity positions while positions 11 and 12 represent the superconducting magnet assembly in the cryomodule. Notice from Figure B that the maximum displacement occurs at the end of the cryomodule. This is a result of unbalanced forces on and resultant bending of the 300 mm gas return pipe which acts as the structural backbone of the cryomodule at to which the cavities and magnet assembly are fixed.

The allowed displacement for the cavities from their ideal location when cold is +/- 5 mm. Note that the measurements show that all the cavities, even the first one are within this specification. However, for the superconducting magnet assembly, the result is different. The magnet package is required to be within +/- 2.5 mm of its ideal location when cold. The data in Figure 19 shows that magnet assembly located at the end of the cryomodule does not meet this requirement. As a result of these measurements, changes have been made in the later XFEL and ILC cryomodules. The support post at the magnet end of the cryomodule has been moved closer to the magnet location. This has the effect of stiffening the 300 mm pipe near the magnet assembly and reduces the displacement of the magnet assembly to a limit suitable for use in XFEL and LCLS II. In the case of the much larger ILC machine, which has tighter alignment requirements, the final design change will likely be to move the magnet assembly to the middle of the cryomodule where the displacement is minimized.

In addition to illustrating important aspects of cryostat design, the early experiences with the TESLA cryomodules also shows the importance of prototype tests in cryostat design. The construction and testing of a prototype cryostat and the subsequent altering of the design based on the prototype results, is an important part of a successful cryostat project. Large systems such as the SSC magnets (Chapter 2), LHC magnets (Chapter 3), SHOOT (Chapter 4), ILC (Chapter 5) and the 12 GeV Upgrade

(Chapter 6) all take this approach. It is important to allow sufficient time in any project schedule for the prototyping process.

9. Modifications for CW operation in the LCLS-II linac

Modifications of a TESLA-style cryomodule for LCLS-II illustrate design features for CW operation and design for relatively larger heat loads than a pulsed linac would typically have. Similar considerations for high heat loads are described for CW operation in Energy Recovery Linacs (ERL) by Oliver Kugeler, et. al. [14] LCLS-II adopted the most recent 8-cavity TESLA-style as developed for XFEL, with magnet at the end (unlike the ILC concept, which moved the magnet to the center), but modified for CW operation and for the SLAC tunnel 0.5% slope. Some major differences from the TESLA-style design include:

- Modified power input coupler for CW power,
- Larger diameter 2-phase 2 K helium piping for increased heat and vapor transport and for liquid helium management with the tunnel slope,
- Closure of each end of the 2-phase pipe with the addition of a liquid helium supply valve in the cryomodule,
- Closure of each end of the cool-down / warm-up pipe manifold for individual cryomodule cooling to facilitate Q0 preservation, with the addition of a cool-down valve in each cryomodule,
- New end lever tuner design for increased stiffness and fine control,
- The addition of tuner access ports to facilitate inspections or small repairs of tuner components,
- Removal of the 5 Kelvin thermal shield due to its marginal benefit relative to dynamic heat loads and the advantages of simplification of design,
- And enhanced magnetic shielding for Q0 preservation.

10.Summary

The TESLA collaboration developed a unique variant of SRF cryomodule designs, the chief feature being use of the large, low pressure helium vapor return pipe as the structural support backbone of the cryomodule. Additional innovative features include all cryogenic piping within the cryomodule (no parallel external cryogenic transfer line), long strings of RF cavities within a single cryomodule, and cryomodules connected in series. Several projects, including FLASH and XFEL at DESY, LCLS-II at SLAC, and the ILC technical design have adopted this general design concept.
Advantages include saving space by eliminating the external transfer line, relatively tight packing of RF cavities along the beamline due to fewer warm-cold transitions, and potentially lower costs. However, a primary disadvantage is the relative lack of independence for warm-up, replacement, and cool-down of individual cryomodules.

11. Acknowledgments

We thank the scientists, engineers, and designers in the TESLA, ILC, and LCLS-II collaborations, and in the TESLA Technology Collaboration for the use of figures from 3-D cryomodule design models and other information about TESLA-style cryomodules.

12. References

1) TESLA Technical Design Report, Part II: The Accelerator, published by DESY, Notkestrasse 85, 22607 Hamburg, March 2001.

2) International Linear Collider Reference Design Report – ILC Global Design Effort and World Wide Study, Volume 3: ACCELERATOR. Editors: Nan Phinney, Nobukasu Toge, Nicholas Walker, August 2007.

3) International Linear Collider Technical Design Report – ILC Global Design Effort and World Wide Study, Editor in Chief: John Carwardine. Part II: eTlhC Baseline Reference, Editors: Nan Phinney, Nobu T

4) TESLA Test Facility Linac Design Report, Editor: Don Edwards, March 1995.

5) The European X-Ray Free-Electron Laser – Technical Design Report. DESY XFEL Project Group, European XFEL Project Team, Deutsches Elektronen-Synchrotron, Member of the Helmholtz Association, Notkestrasse 85, 22607 Hamburg, Germany. http://www.xfel.net, July 2007.

6) LCLS-II Final Design Report (LCLSII-1.1-DR-0251-R0) November 22, 2015.

7) Nicol, T.H., Niemann, R.C., Gonczy, J.D., "SSC Magnet Cryostat Suspension System Design", Advances in Cryogenic Engineering, Vol. 33, pp. 227-234, Plenum Press, New York, 1988.

8) Nicol, T.H., Niemann, R.C., Gonczy, J.D., "A Suspension System for Superconducting Super Collider Magnets", Proceedings of the Eleventh International Cryogenic Engineering Conference, pp. 533-538, Butterworth & Co., Surrey, UK, 1986.

9) Nicol, T.H., "TESLA Test Cell Cryostat Support Post Thermal and Structural Analysis", Fermilab TM-1794, August 1992.

10) A. Ballarino, "Conduction-cooled, 60 A Resistive Current Leads for LHC Dipole Correctors," LHC Project Report 691, European Laboratory for Particle Physics. CERN HC- 1211 Geneva 23 Switzerland, 5 March 2004

11) Horlitz, G., Peterson, T., and Trines, D., "The TESLA 500 Cryogenic System Layout," in *Advances in Cryogenic Engineering* 41A, edited by P. Kittel et al., Plenum, New York, 1996, pp. 911-920.

12) Wolff,S.Lierl,H.Petersen,B.Weisend II,J. The Cryogenic System of TESLA 500 – An Update Proceedings of the International Cryogenic Engineering Conference ICEC 17, Bournemouth, U.K., (1998), 879-882

13) T. Peterson, Fermilab “Notes about the Limits of Heat Transport from a TESLA Helium Vessel with a Nearly Closed Saturated Bath of Helium II”, TESLA report #94-18 (June, 1994).

14) O. Kugeler, A. Neumann, W. Anders, and J. Knobloch, Helmholtz-Zentrum-Berlin (HZB), 12489 Berlin, Germany, “Adapting TESLA technology for future cw light sources using HoBiCaT”, REVIEW OF SCIENTIFIC INSTRUMENTS 81, 074701 (2010).

15) B. Rousset, A. Gauthier, L. Grimaud, and R. van Weelderen, "Latest Developments on He II Co-current Two-phase Flow Studies," in Advances in Cryogenic Engineering, Vol 43B (1997 Cryogenic Engineering Conference), pp. 1441 – 1448.

16) Petersen, B., Wolf, S., “Numerical Simulations of Possible Fault Conditions in the Cryogenic Operation of the TTF/FEL – and Tesla Linear Accelerator”, *Proceedings of the 18th International Cryogenic Engineering Conference (ICEC18),* Mumbai, India, 2000.

17) C. Pagani et al. “Construction, Commissioning and Cryogenic Performances of the First TESLA Test Facility (TTF) Cryomodule”, Adv. Cryo. Engr., Vol. 43A (1998).

18) N. Ohuchi et al., “Thermal Performance of the S1-Global Cryomodule for the ILC”, *Proc. IPAC2011* (2011).

19) D. Giove, “ A Wire Position Monitor (WPM) System to Control the Cold Mass Movements Inside the TTF Cryomodule”, *Proceedings of the 1997 Particle Accelerator Conference*, Vol. 3 (1997)