FERMILAB-TM-2525

DESIGN B SSC DIPOLE MAGNET

CRYOSTAT

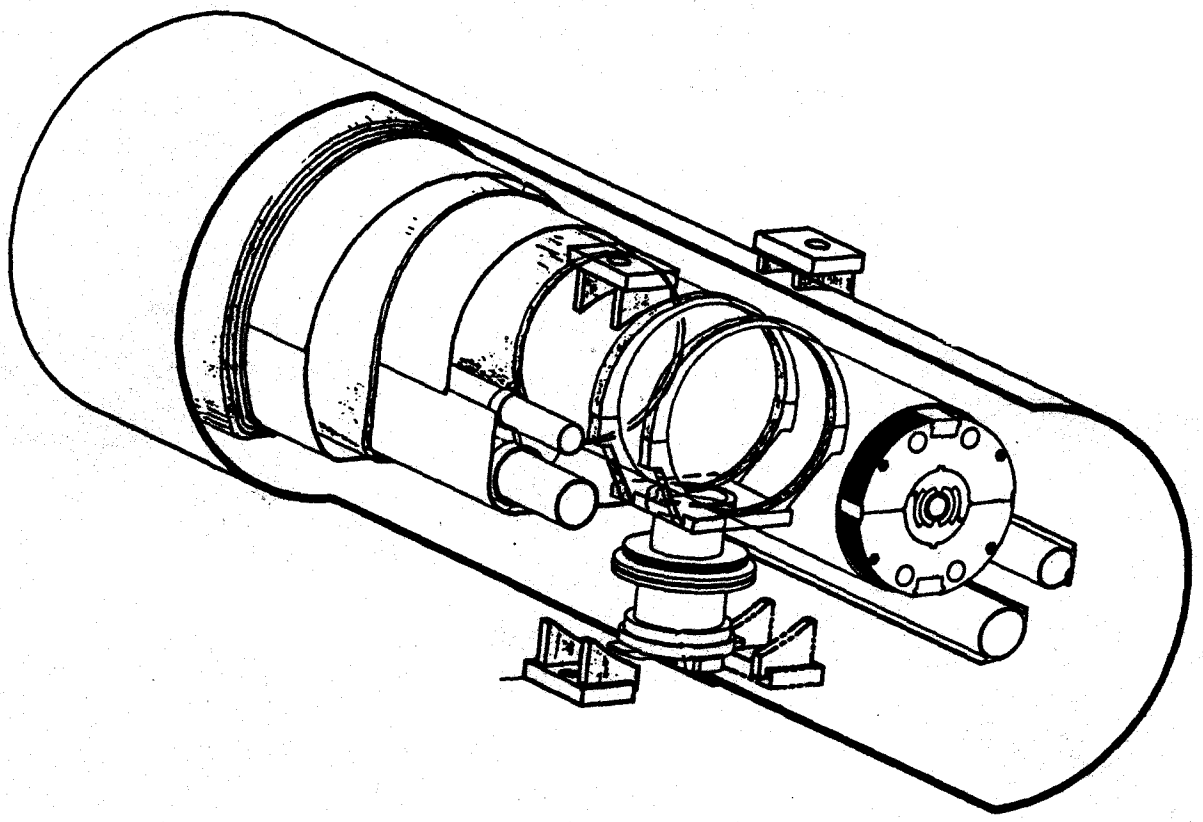

Fermilab

September 1987

Operated by Fermi Research Alliance, LLC under Contract No. DE-AC02-07CH11359 with the United States Department of Energy

PROPOSAL

DESIGN B SSC DIPOLE MAGNET

CRYOSTAT

TABLE OF CONTENTS

1. Introduction 1
2. Cryostat 2
3. Cold Mass Connection-Slide 4
4. Suspension System 7
5. Thermal Shields 12
6. Insulation 15
7. Vacuum Vessel 19
8. Interconnection 22
9. Costs 26
10. Conclusions 40

1. Introduction

In accordance with the SSC Magnet Development Program, accelerator dipole magnets will be developed in three design iterations; i.e., A, B and C.

The Design A phase is currently nearing completion with three full length magnets and a thermal model having been built and tested and with three more full length magnets being in various stages of construction.

The experience with Design A along with the evolving SSC Magnet System Requirements has resulted in the Design B magnet configuration. It is this configuration that will be employed for the ongoing magnetic, thermal, string and accelerated life testing and will be the design considered by Phase I; i.e., Technology Transfer, of the SSC Magnet Industrialization Program.

Design C will be the final production design. Its inputs will include the experience of Design B along with the initial phases of Industrialization.

The proposal for the Design B magnet cryostat is presented in the following paragraphs. The approach taken describes Design A and its experiences, the proposed Design B and its improvements over Design A and identifies followon development efforts where appropriate. The proposal is brief in nature and will be augmented, as necessary, by drawings, procedures, test results, reports, etc.

2. Cryostat

The cryostat features are critical to the SSC design since they must allow proper magnetic function, impose a low refrigeration load on the cryogenic system, operate with a very high reliability and be manufacturable at low cost. The cryostat must function reliably during transport, transient, steady state and upset conditions.

The major components of the cryostat are the cold mass assembly, cold mass connection-slide, suspension system, piping, thermal shields, insulation, vacuum vessel and interconnections. The cryostat component relationship is as shown by in Figure 2.1. The cryostat external features at installation in the accelerator tunnel are as shown by Figure 2.2.

Component design considerations include fluid flow, materials selection, structural performance, displacement, thermal performance and differential thermal contraction. Functional tradeoffs were incorporated to optimize the effectiveness of each component as it relates to the overall, long-term performance of the magnet system. The design process utilized computations and analytical models to predict the performance of components and systems. Predictions were evaluated by means of measurement where appropriate. The design effort has involved intensive interactions with magnet, cryogenic system and manufacturing designers.

The cryogenic system requires five pipes in the cryostat. The pipes provide services for the single phase helium, 5 K liquid helium return, 5 K gaseous helium return, 20 K gaseous helium shield and 80 K liquid nitrogen shield. The 20 K shield temperature was selected to optimize the performance of the refrigeration system.

The heat leak budget per magnet is given in Table 2.1.

Table 2.1

Dipole Heat Leak Budget (Watts)

	Circuit: (nominal temp.) 4 K	20 K	80 K
Dipole Static			
Infrared	0.05	2.16	17.7
Supports	0.12	0.82	7.2
Conn. & Instr.	0.15	0.32	2.1
subtotal	0.32	3.30	27.0
Dipole beam-related:			
Synch rad.	2.34		
Splices	0.10		
Beam-gas	0.10		
Beam-microwave	0.20		
subtotal:	2.74		
Dipole Totals:	3.06	3.30	27.0

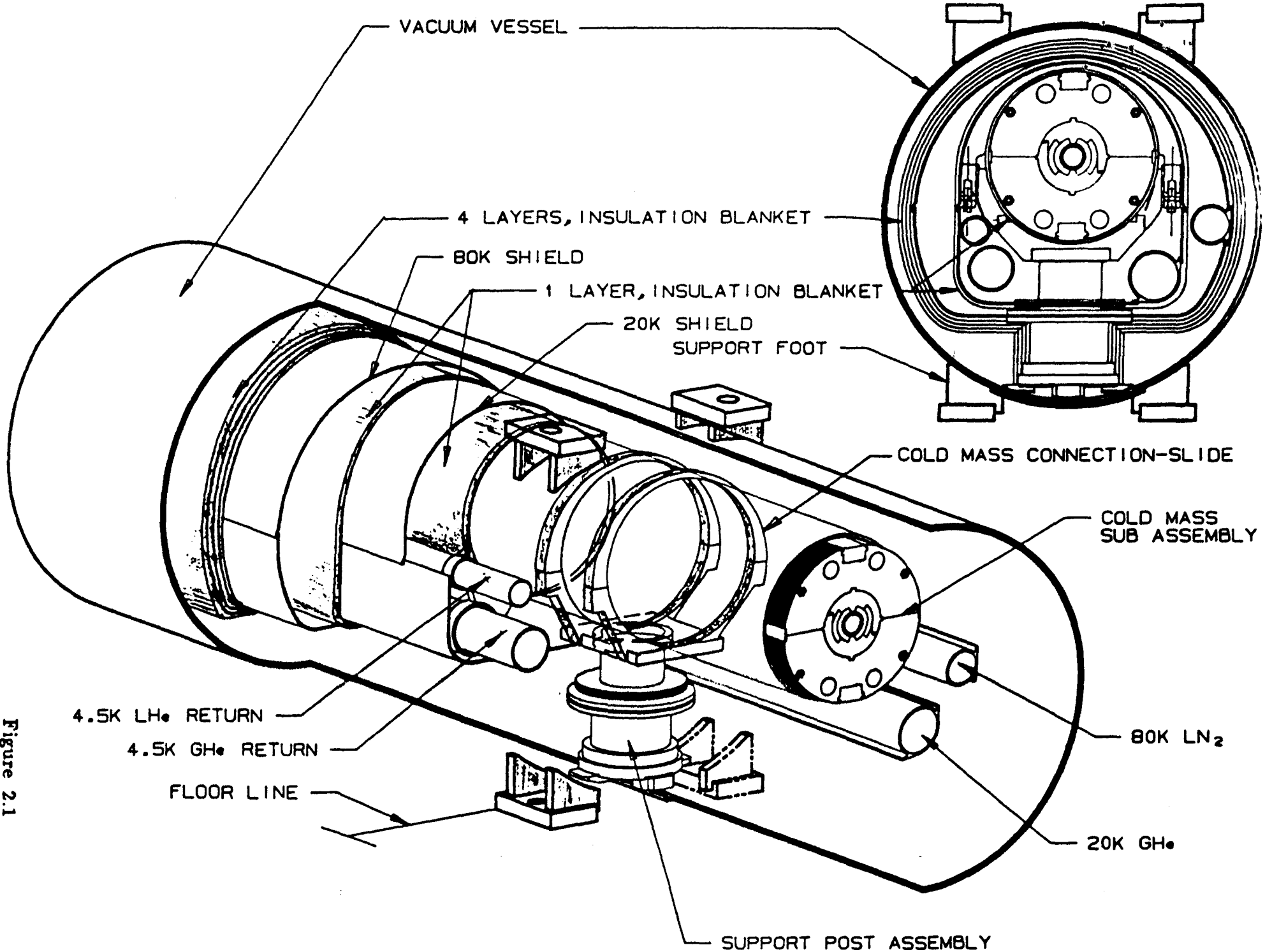

Figure 2.1
SSC Design B Dipole Magnet Cryostat

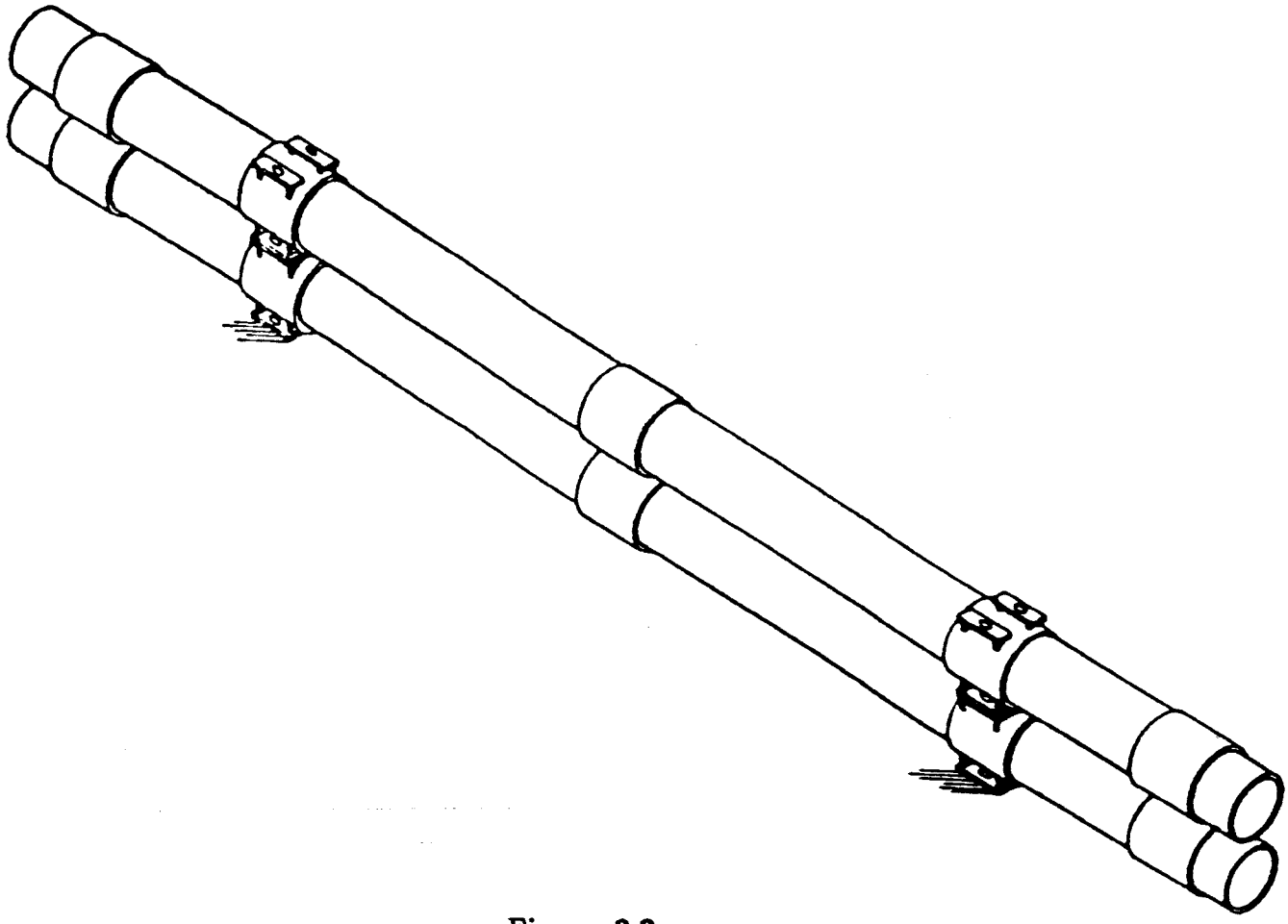

Figure 2.2
SSC Dipole Cryostat Tunnel Installation

3. Cold Mass Connection-Slide

The cryostat utilizes five cold mass-suspension system connections. The connections must withstand transportation and seismic loads, accomodate axial contraction of the cold mass during cooldown and warmup cycles, accurately position the magnetic axis and fit within the compact geometry of the cryostat. Four of the connections must allow for relative axial motion, while an anchor connection axially fixes the cold mass through the suspension system and the vacuum vessel to ground. The connections are securely attached to the support post cold (4.5 K) end rings in order to transfer the structural loads to the suspension system.

Design A

The Design A cold mass-suspension connection is as shown by Figure 3.1.

Fiducial insert pins, referenced to the iron yoke, penetrate the cold mass outer shell. Seal welds on the cold mass outer shell at the fiducial locations maintain the cold mass pressure vessel integrity. The insert pins function both as fiducial and structural load transfer elements. Two parallel rods located in sleeve bearings support and guide the tie bar which in turn supports two blocks which position and hold both insertion pins, locking the rotational and lateral cold mass position.

Design A Experience

Accurate location of the insertion pins was difficult to accomplish due to cold mass weld shrinkage and distortion. Axial pin to pin variations were significant and angular misalignments made slide assembly difficult. Cold mass twist caused the supports to lie out of plane requiring compensating shims. Extensive additional labor was required for the connection installation due to such misalignment and the corresponding need to re-survey and compensate during assembly.

The slide's parallel rods experienced excessive wear due to high contact stresses and misalignment of the rods as a result of assembly tolerance build up which made maintaining rod parallelism difficult. The wear resulted in binding during sliding tests at less than 100 cycles. Careful matching of mating parts (a non-production option) along with an improved bearing insert solved the binding problem.

Design B

Design B connection was developed with the experience of Design A and focused on improving performance in the following areas:

- Reduce weld penetrations in cold mass outer shell.

- Providing angular position adjustment of cold mass about its axis during cryostat assembly.
- Increased structural capacity for dynamic loads.
- Improved bearing performance and lower contact stresses to avoid stick-slip binding and to reduce the wear rate.
- Increased simplicity and fewer parts.
- Conducive to more accurate alignment procedures.

The Design B cold mass-suspension connection is as shown by Figure 3.2.

Four bearing blocks, containing removable bearing pads, contact the cold mass outer shell and establish the position of the cold mass assembly. The bearing pads are supported by upper and lower cradles, the latter is secured to the support post cold (4.5 K) end ring by means of a split locking ring. The outer surface of the cold mass is used as the fiducial for locating the magnetic axis, thus eliminating multiple skin penetrations. The four bearing points are located to avoid the longitudinal shell weld seams and the cutouts in the iron yoke which may have fabrication distortions and are not reliable alignment surfaces.

To function properly, the cold mass outer shell or skin must be precise in nature relative to its thickness and form and must be installed with intimate contact to the outside of the cold mass iron yoke at the bearing contact points. The degree of precision required is dependent on the skin's functional requirements. If the only functional requirement of the skin is to provide a shaft that meets the requirements of the sliding journal bearing, the OD of the installed skin must be within ±0.020" of the nominal value. If the function of skin is to provide a journal bearing shaft as well as being the principle cold mass fiducial, the OD of the installed skin must be within ±0.001" of the nominal value. Precision skin development is underway. Skin material has been procured in quantity with thickness variations of less than several ten-thousands of an inch. The material has been formed into shell sections and will be installed on Long Magnet Model D0011. Tests with short lengths of skins and yokes have demonstrated that skins can be installed on yokes and welded together to provide intimate contact between the skin ID and the yoke OD. An alternate means of locally; i.e., at the support points, providing precision OD cold mass sections by machining an assembled cold mass is being evaluated. A cost comparison study is proceeding for the two methods of providing the precision skin. The degree of skin precision for alignment can be reduced by the incorporation and use of a full length fiducial - skin closure bar. This concept has been incorporated into the Fermilab SSC dipole cold mass design and will be evaluated as a part of that program.

The connection-slides allow rotational adjustment which provides for final alignment during assembly. By measuring the average vertical magnetic plane and determining its offset, the cold mass can then be rotated to compenstate for this offset and fixed at the center anchor connection. The cold mass remains rotationally free at all but the center support.

The upper half of the connection retains the cold mass during transportation and seismic loading. The connection has been tested at or above Magnet System Requirements specified loads. The upper half does not establish alignment and does not require the high tolerances associated with the lower half. Conical spring washers act as tensioner springs on the bolts which connect the two halves of the connection cradle. The spring action maintains uniform loading during thermal cycling and minimizes radial differential thermal contraction effects between the cold mass and the connection.

Evaluations of the connection-slide's sliding characteristics were made using a full length model at ambient conditions and a short model at cryogenic conditions. Post deflection and load to initiate sliding were measured versus number of cycles. Conclusions are as follows:

- The 3.3 mm cold mass sagitta has little effect on the sliding characteristics. The results are as shown by Figure 3.3.

- Cooling the assembly to 80 K increases the sliding resistance 2.5 times over ambient test runs. The results are as shown by Figure 3.4. The imposed loads are well within the capabilities of the suspension system.

- The slides performed acceptably for a number of cycles that greatly exceed the twenty cooldown - warmup cycles specified for the life of a magnet.

Alternate cradle fabrication methods are being investigated, with a cast cradle assembly scheduled for test.

The present bearing material is acceptable for model magnet cryostat purposes. Further tests will determine its properties in a worst case condition. Other dry lubricant materials are under investigation.

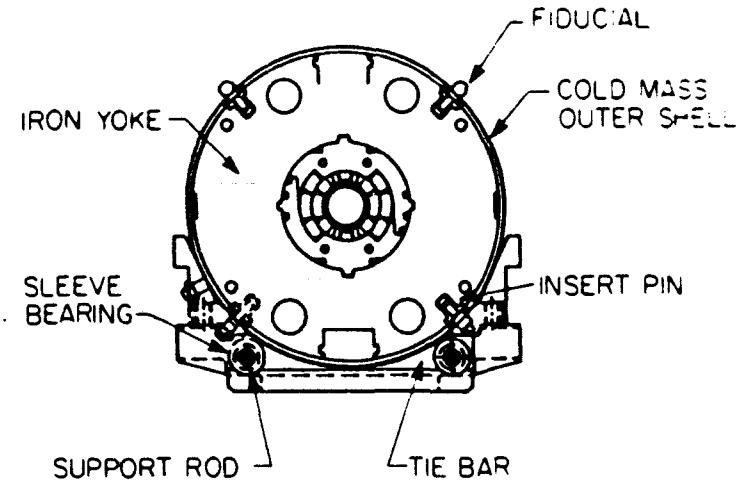

Figure 3.1

Design A Cold Mass Connection-Slide

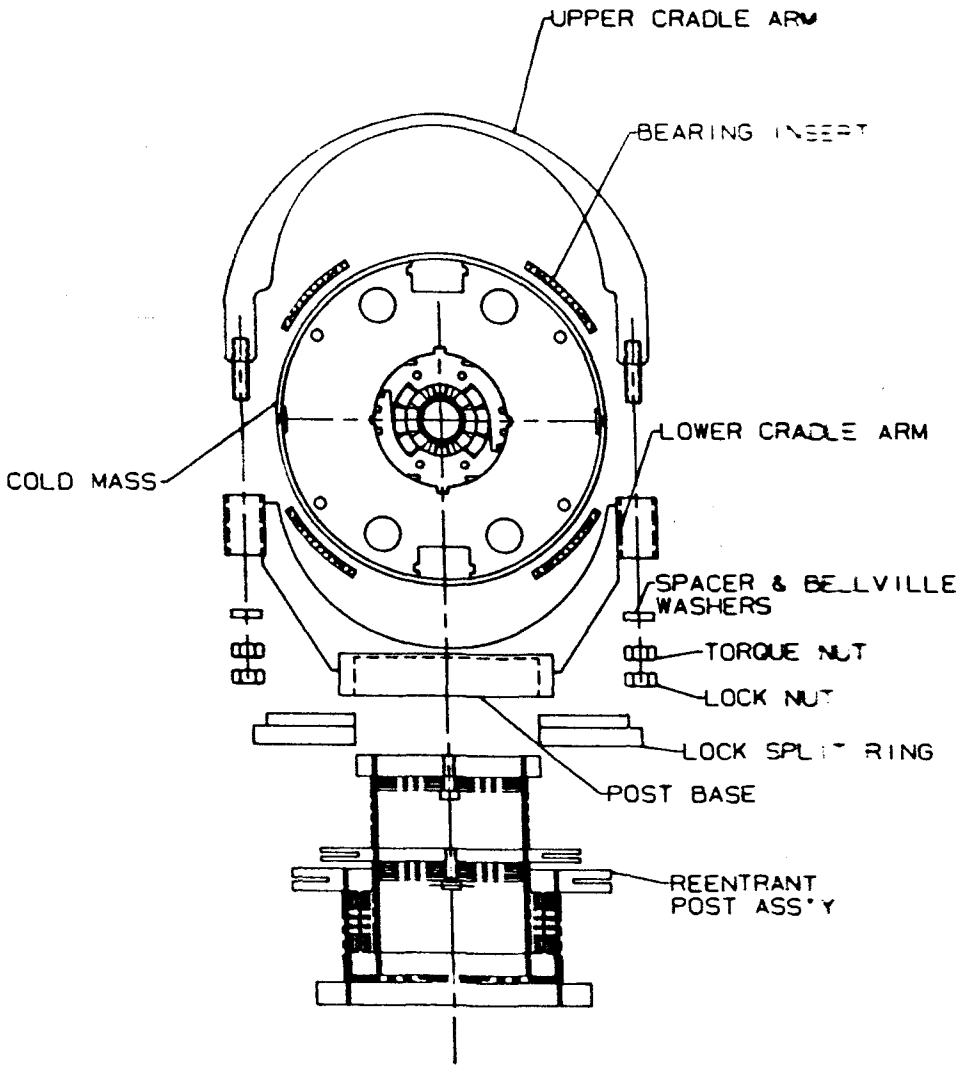

Figure 3.2

Design B Cold Connection-slide

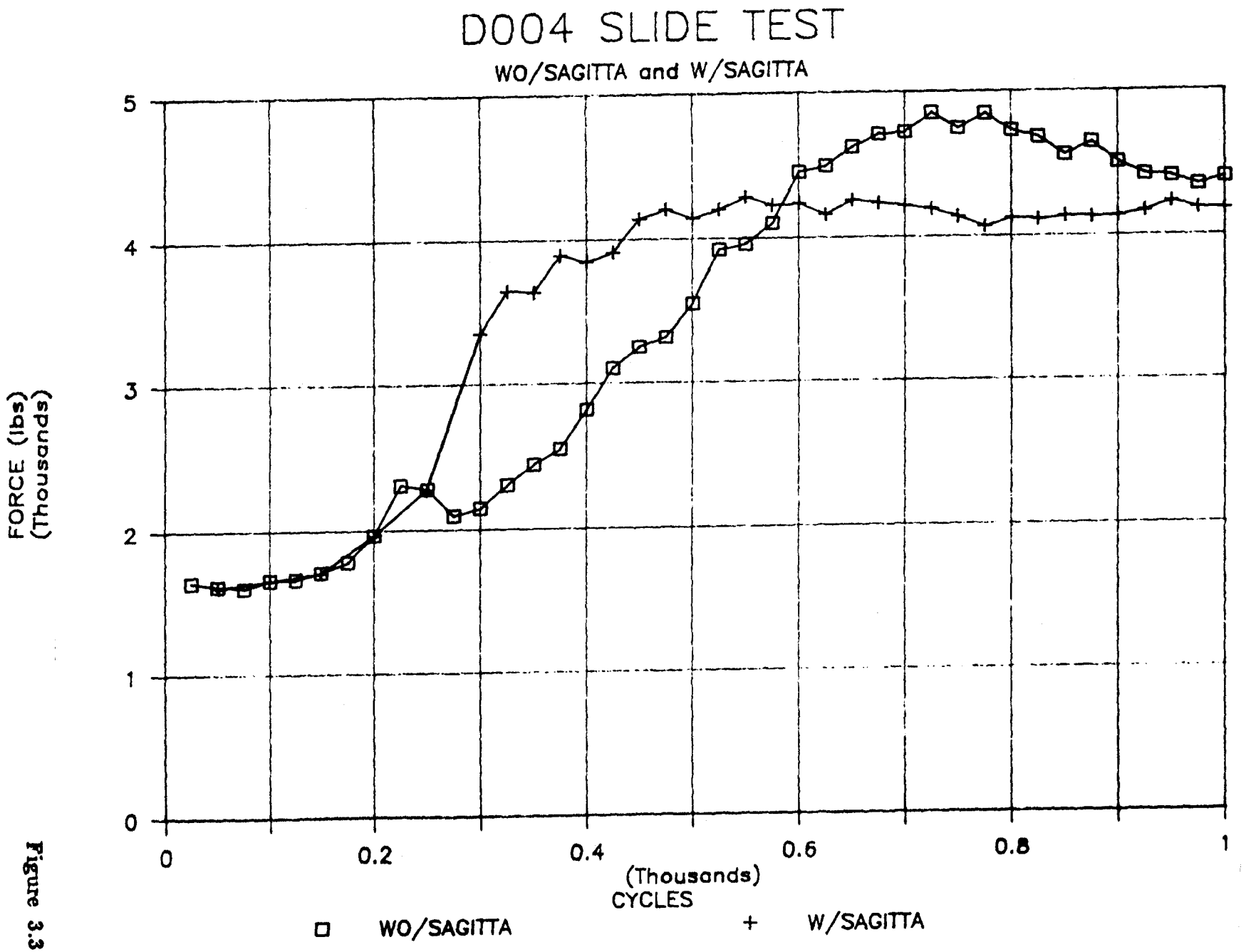

Figure 3.3
D004 Slide Test

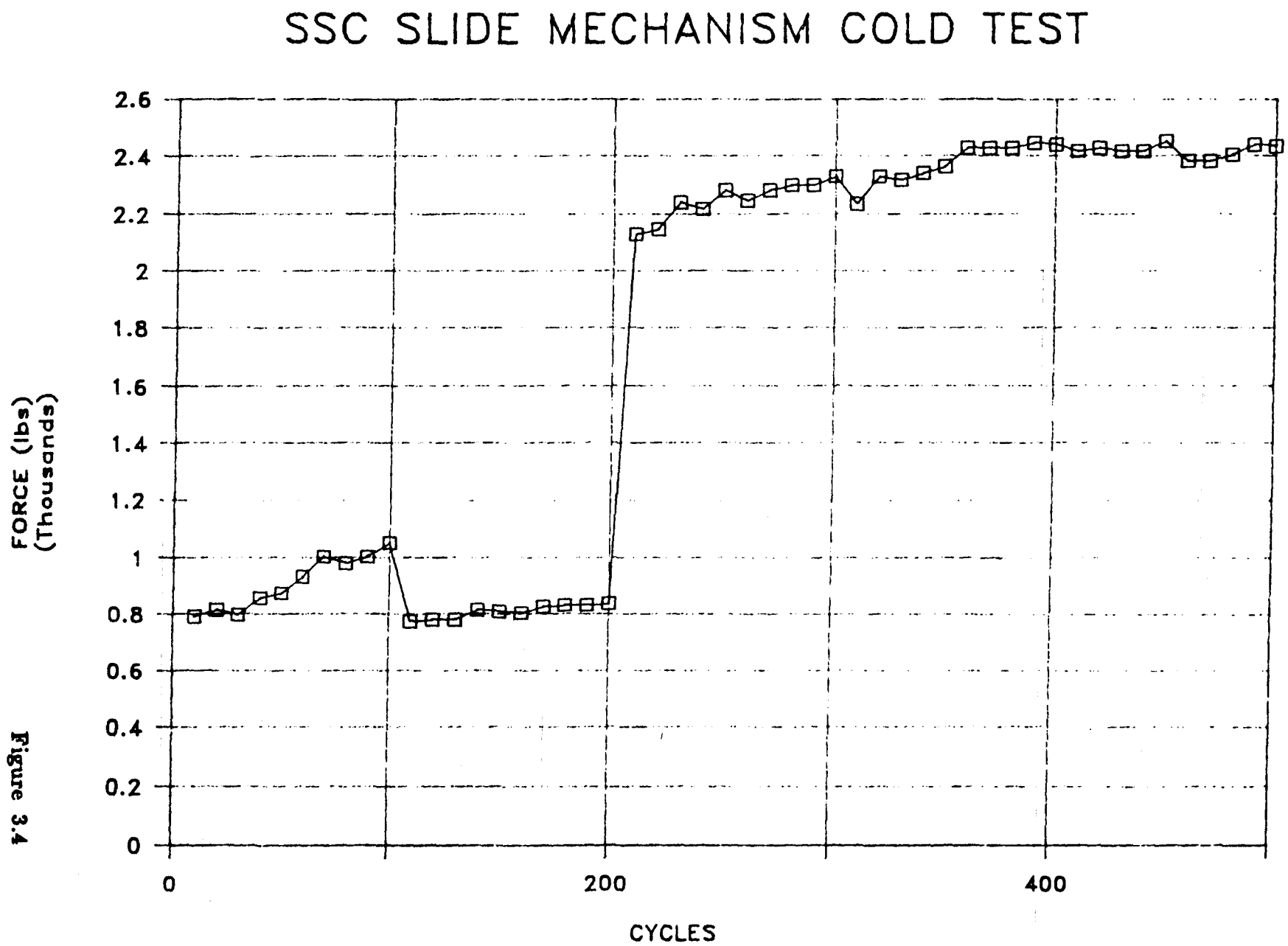

Figure 3.4

SSC Slide Mechanism Cold Test
Design B Cold Mass-Suspension Connection

Cycles 10 100 300K and 760 torr Cycles 110-200 300K and 5.0E-5 torr Cycles 210-400 80K and 1.0E-7

4. Suspension System

The cryostat suspension system performs two essential functions. First, it resists internally and externally generated structural loads imposed on the cold mass assembly ensuring that the position of that assembly is stable over the operating life of the magnet. Second, it serves to insulate the cold mass from heat conducted from the environment.

To satisfy the first function, the normal operating stresses in the suspension system must be low enough to avoid creep in the component materials yet sufficient reserve strength must exist to handle loads imposed during shipping and handling of the magnet assembly, seismic excitations and internally generated axial quench loads. To satisfy the second function in some optimal way, the suspension components must be sized to just meet the structual requirements and utilize materials that offer a good compromise between mechanical strength and thermal impedance. Table 4.1 summarizes the structural and thermal loads considered during the design of the suspension system.

Table 4.1. SSC Dipole Structural and Thermal Load Summary

Shipping and handling loads:	vertical	2.0 g
	lateral	1.0 g
	axial	1.5 g
Seismic load guidelines:	Nuclear Regulatory Guide 1.60 vertical and horizontal spectra scaled by 0.3	
Maximum axial quench load	Design A:	10000 lb
	Design B:	25000 lb
Suspension conduction heat load budget per magnet:	80 K	7.20 W
	20 K	0.82 W
	4.5 K	0.12 W

Support Post

Several candidate support systems were considered during the early cryostat development stages. A reentrant support post assembly was selected for its superior mechanical and thermal performance. Figure 4.1 is a cross section through a typical SSC support post. Briefly, it consists of two concentric composite tubes; one operating between 300 and 80 K, the other between 80 and 4.5 K. The connection between these inner and outer tubes is via a metallic tube located in the annular space between them. It connects the top of the outer tube to the bottom of the inner tube and allows the inner tube to reenter the outer, thus increasing the total conductive heat path length. All of the metal to composite joints are effected by sandwiching the composite tubes

between metallic discs and rings. Clamping forces are generated by shrink fits at all joints. No other mechanical or chemical bonds are made.

Design A

During the early stages of the Design A development little was known about the details of applying seismic and shipping and handling loads to the detailed design of the support post components. Typically, static equivalent loads equal to the dynamic loads were used without utilization of force amplification factors. This fact, coupled with early axial quench load estimates, resulted in a support post system which is not adequate to meet the current structural loads for SSC magnets.

The Design A support post was identical in cross section to that shown in Figure 4.1. The outer composite tube was 7" OD, 0.065" wall, G-11CR. The inner tube was 5" OD, 0.065" wall, G-11CR. Although not capable of meeting the current design requirements, the posts for Design A were capable of satisfying the needs of the model magnet program. Each post installed in a magnet was tested to 0.7 g (2200 lb) lateral load. A post was measured in the Heat Leak Test Facility. The measured and predicted heat loads are listed in Table 4.2.

Table 4.2. Measured and Predicted Design A Support Post Heat Loads

Thermal Station	Measured (W)	Predicted (W)
80 K	1.05(*)	1.34
20 K	0.11(*)	0.12
4.5 K	0.018	0.015

(*) Calculated using measured temperatures and known thermal conductivity.

Design B

The proposed Design B support post is nearly identical in design to that used for Design A. The differences stem from a better understanding of the effects of seismic and shipping and handling loads and from the increased estimates of potential axial quench loads. It is important to note that proper modeling of the dynamic loads yields equivalent axial static loads which are nearly identical to the higher estimates of axial quench loads. Therefore, lowering the axial quench load criterion will not significantly affect suspension system design.

The Design B outer post is 7" OD, 0.109" wall, fiberglass reinforced composite. The inner tube is 5" OD, 0.129" wall, graphite reinforced composite.

The heavier walls and the graphite inner tube increase the strength and stiffness of the post assembly. The use of graphite on the inner post partially offsets the increased heat load incurred from the heavier wall. The change to a graphite material is only applicable for the inner tube. As shown in Figure 4.2, G-11CR is the better thermal choice for materials operating between 300 and 40 K. Graphite is the better thermal choice below 40 K.

Table 4.3 lists the predicted values for the operating heat loads to each of the thermal stations. A Design B post has been measured in the Heat Leak Test Facility. A heat load of 0.020 W was measured at 4.5 K. This load does not include the resistance of the slide cradle. The effect of the slide cradle resistance is to lower the actual heat load to 4.5 K. As a result, 0.020 W is a very conservative figure. Measurements of the heat leak of the support post with the slide cradle installed will be made.

Table 4.3. Predicted Design B Support Post Heat Loads

Thermal Station	Predicted (W)
80 K	2.10
20 K	0.32
4.5 K	0.015

Anchor System

The five support posts used in the cryostat share vertical and lateral loads induced by shipping and handling and seismic excitations. Thermal contraction of the cold mass assembly during cooldown and warmup necessitates axial sliding between the cold mass and each of the four outboard posts and thus they do not contribute to axial load restraint. The center post is attached rigidly to the cold mass assembly to ensure correct axial position within the cryostat's vacuum vessel. Given no other axial restraint, the center post would carry the complete axial loads induced during shipping and handling, seismic disturbances and differential pressures which can occur during magnet quenching. A single post is incapable of handling these loads alone. Utilizing a 'strong' post at the center would impose intolerable heat loads on the cryogenic system. Thus a separate means of effecting axial restraint was required.

Design A

The anchor system employed for Design A is as shown by Fig. 4.3. It consists of two tubular struts connected via pinned joints at 300 K to the base of the center post and at 4.5 K to the cold mass assembly. The struts share any axial load imposed on the cold mass; one reacting in tension, the other in compression. As an anchor, this system works well. Its impact on the cryostat as a whole, however, is not ideal. First, it adds two more suspension components conducting heat from 300 to 4.5 K, increasing the heat loads to all intercept stations. Second, it penetrates the thermal shields at 80 K and 20 K, complicating assembly and necessitating elliptical holes which are difficult to insulate. Even a small crack in the insulating layers can produce large increases in the radiative heat load.

Design B

Ideally, the anchor system should function with negligible thermal impact on the cryogenic system and should introduce no perturbations into other cryostat components; i.e., like the shield holes in the case of the strut system.

As previously noted, the sliding cold mass-suspension connections implies that the fixed center post is the only one capable of resisting axial loads. Recognizing that the bending strengths of all five posts could be combined to effectively act as a single axial restraint, it has been decided to connect the 4.5 K ring of each post to that of each adjacent post with axial tie bars.

The tie bar material is essentially a uniaxial graphite reinforced epoxy pultruded or filament wound into 2" OD, 0.25" wall tubes. Graphite filaments were chosen for their thermal expansion properties. When cooled from 300 to 4.5 K, the fibers tend to grow and the epoxy tends to shrink. The net effect is a tube which changes length by only a small amount over the operating range of the anchor assembly. Tests of the initial material sample indicate that a complete tie bar shrinks only 0.001" when cooled to 80 K. Tests have not been performed to 4.5 K. A change in the length of a given tie bar manifests itself in loads being applied to the tops of adjacent posts. Clearly, 0.001" does not represent a load of consequence. During individual post lateral load tests, deflections of 0.100 to 0.200" are routine.

Graphite reinforced material has the added benefit that it is stiff which tends to distribute axial loads among all five support posts more evenly than a less rigid material.

The importance of the tie bars is their impact on the thermal performance of the anchor system. First, the tie bars are tied at both ends to 4.5 K and so contribute nothing to the conductive heat load on the cold assembly. Second, they lie completely inside the 20 and 80 K shields and so require no penetrations through the shield system. Figure 4.4 illustrates the post-anchor system. Only three posts are shown for clarity.

Structural testing has not been completed on a complete Design B post-anchor system, however, the tie bar anchor system has been fitted to a set of five Design A posts for evaluation of performance relative to prediction. Figure 4.5 illustrates the cold mass deflection vs. applied load for this design A-B hybrid system and provides an indication of the total anchor stiffness. Figure 4.6 illustrates the axial strain measured in the tie bars for the same system and provides an indication of the load sharing between posts. The data for Figures 4.5 and 4.6 was recorded after having cycled the suspension system 100 times between no load and 12500 lb applied axially at the centerline of the cold mass assembly.

Similar tests of the complete Design B system will be made. The Design B system will be tested with a 25000 lb axial load applied at the centerline of the

cold mass assembly. In addition, testing will be performed to measure the natural frequencies of the system in the lateral and axial directions. More comprehensive dynamic testing will be pursued, since it is required to verify analytical simulations of the magnet system subjected to dynamic loads.

Figure 4.7 illustrates a complete cold mass and suspension system and provides a summary of the pertinent physical and performance parameters.

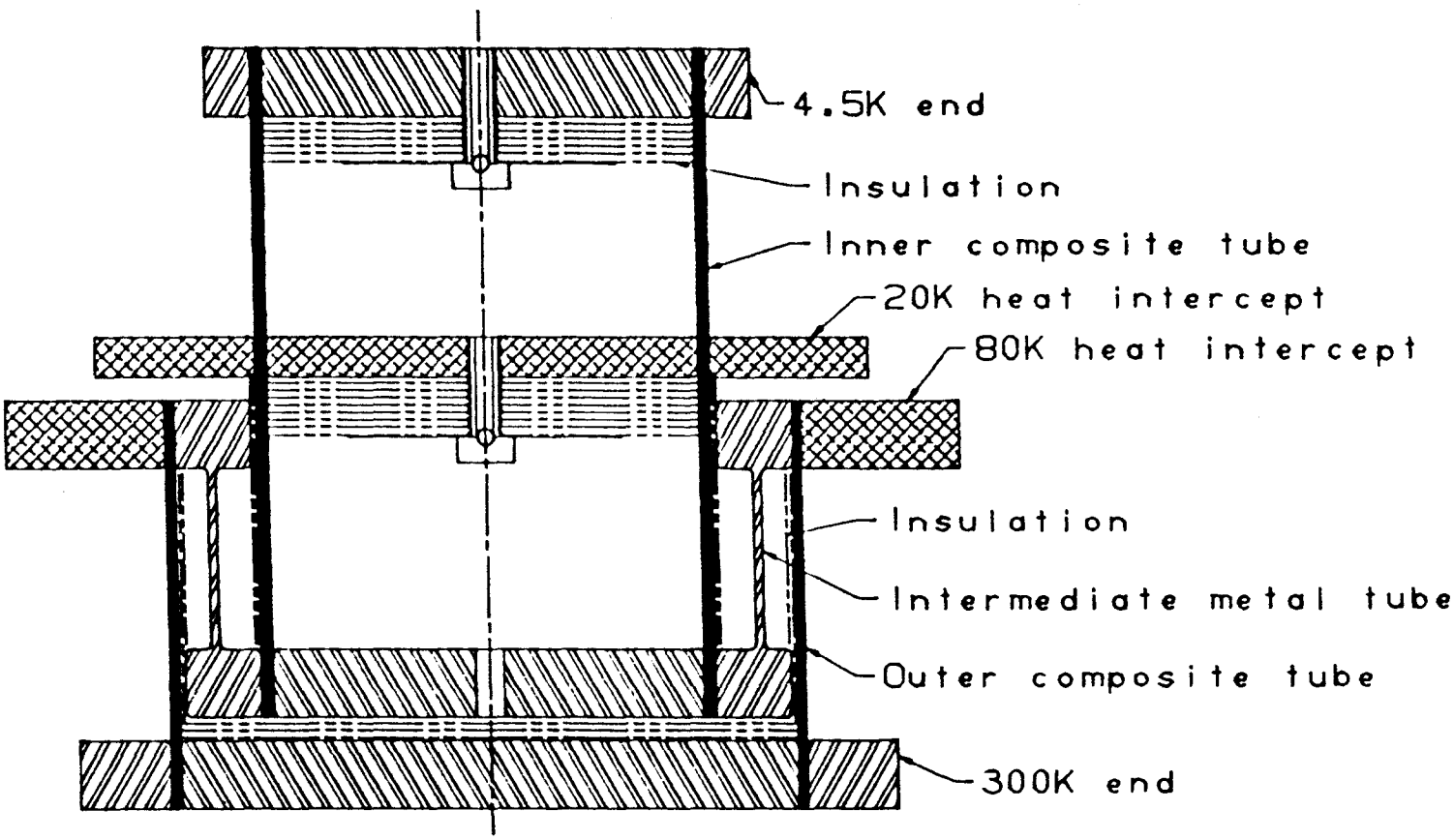

Figure 4.1
SSC Support Post Cross Section

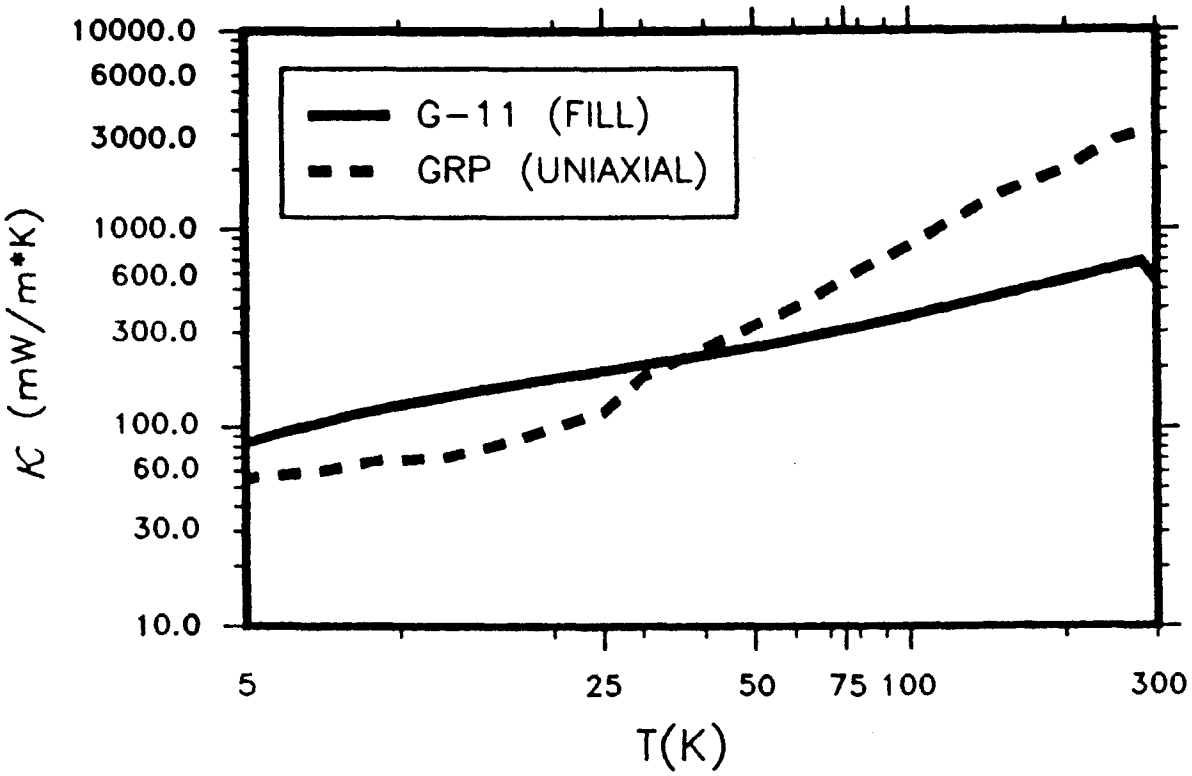

Figure 4.2
Thermal Conductivity of G-11CR and GRP Tube Material

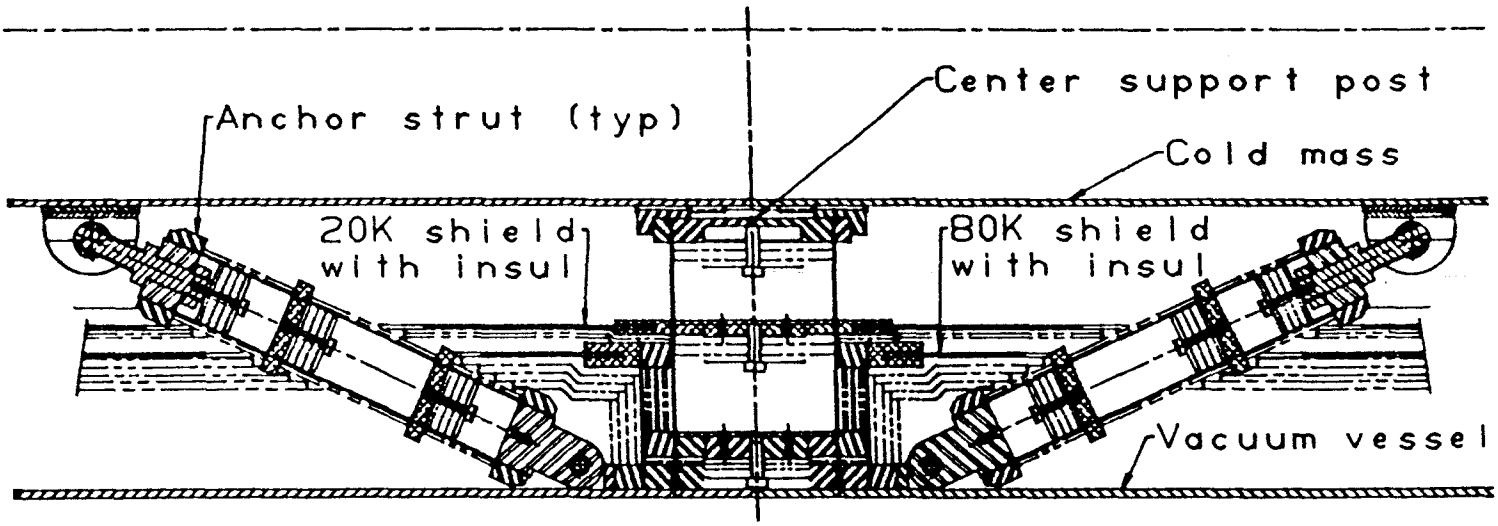

Figure 4.3
Design A Strut Type Axial Anchor System

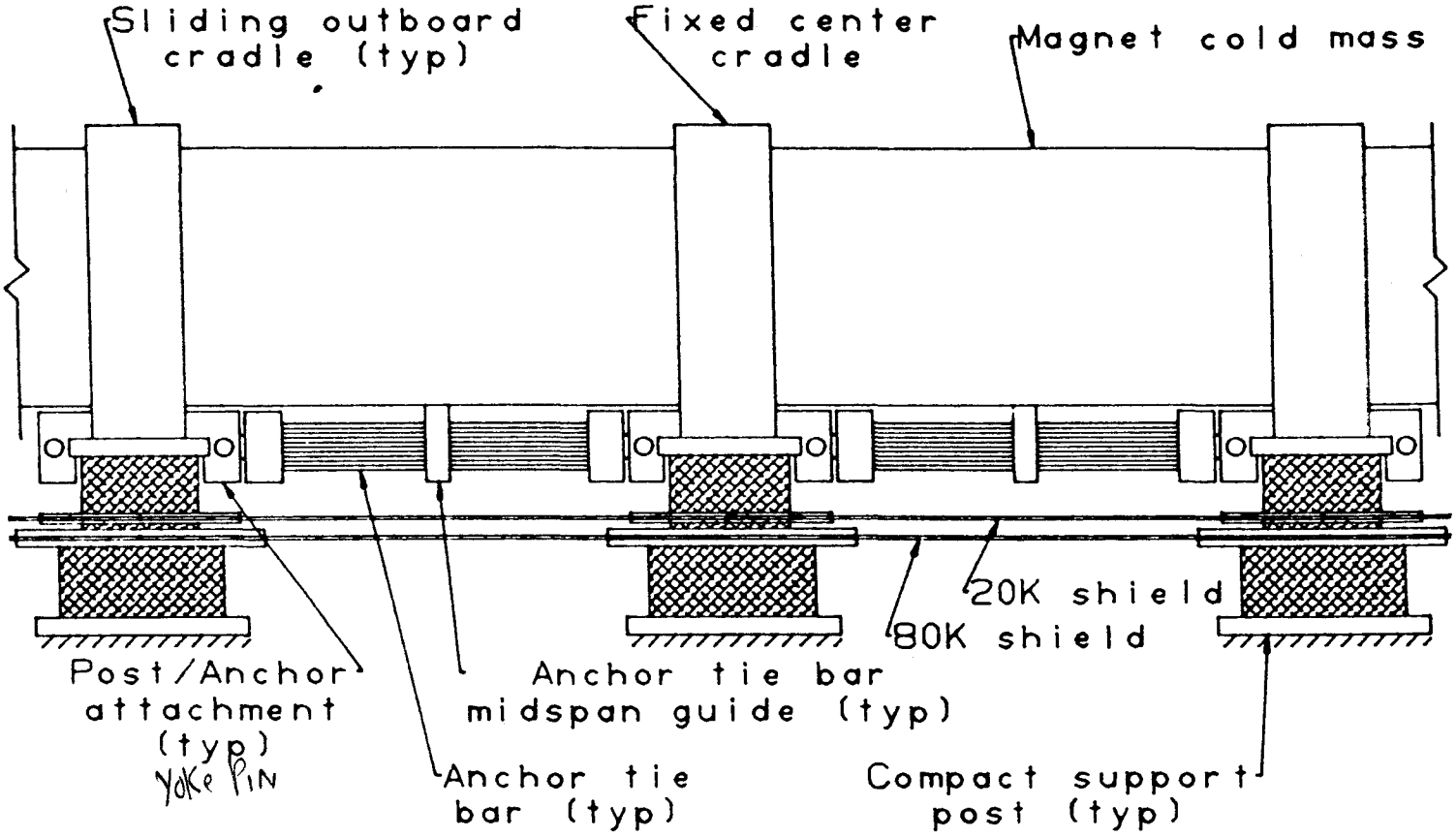

Figure 4.4
Design B Support Post/Tie Anchor System

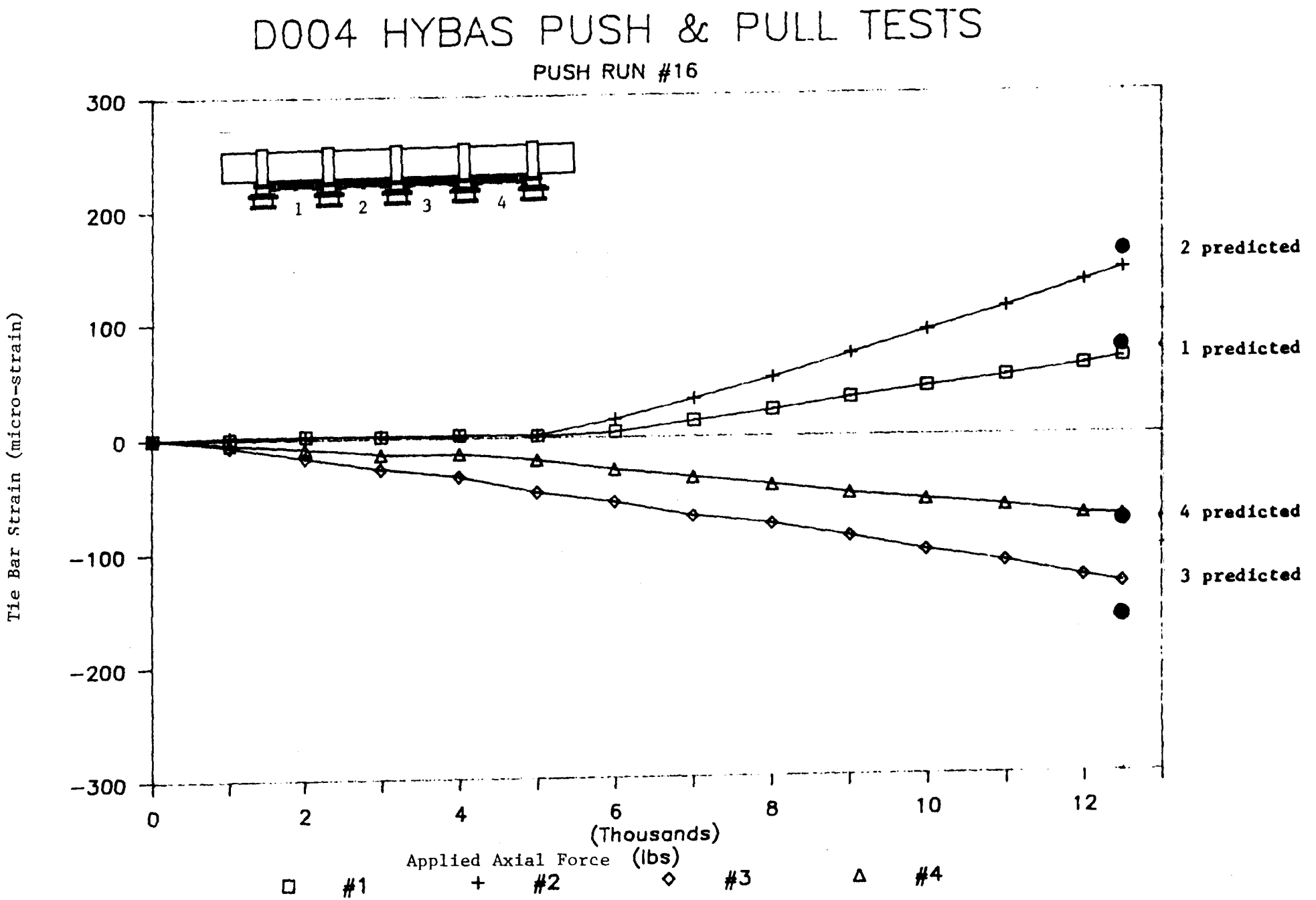

Figure 4.5

Axial Load Share Tests

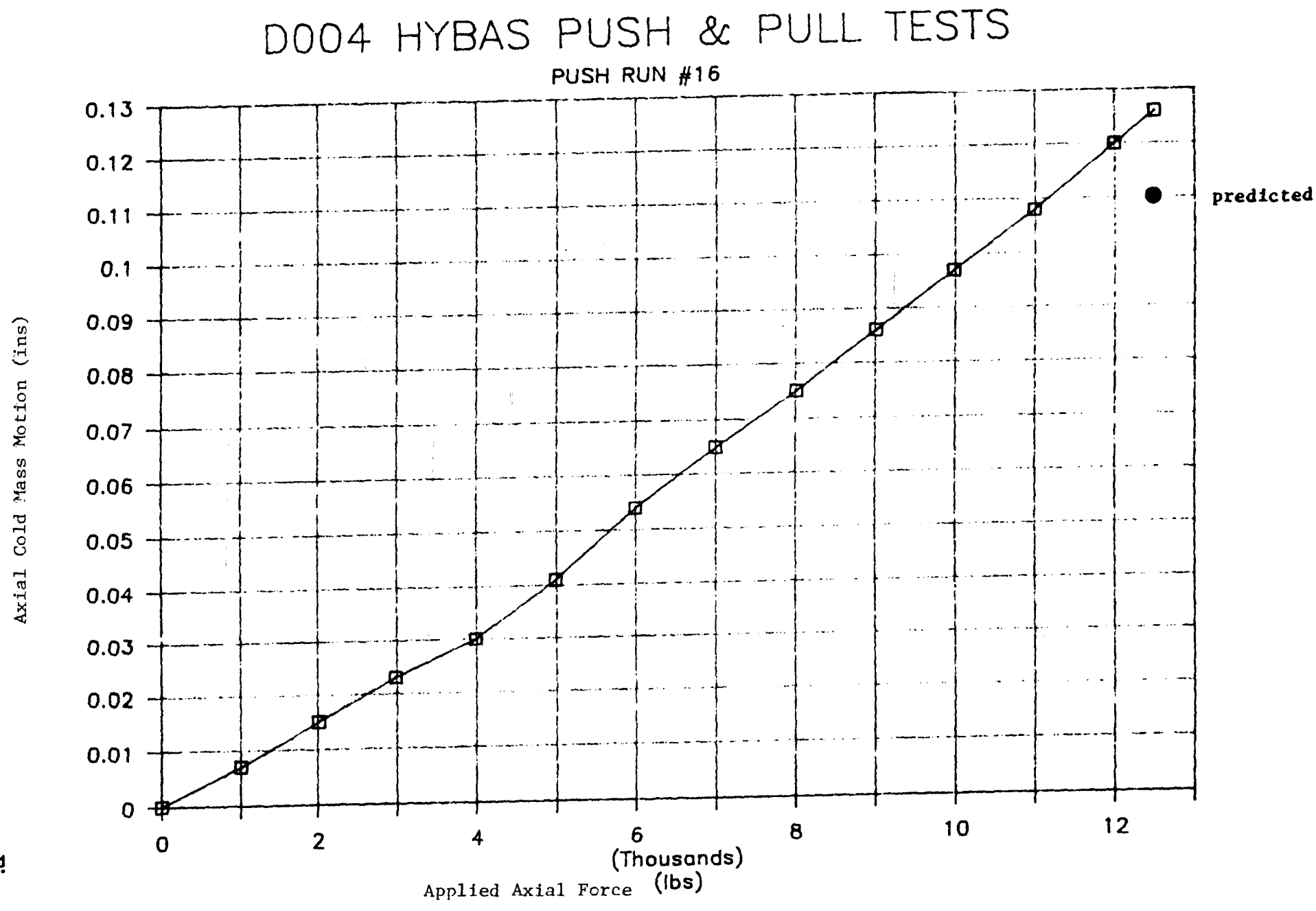

Figure 4.6

Design B Type Anchor Axial Load Response

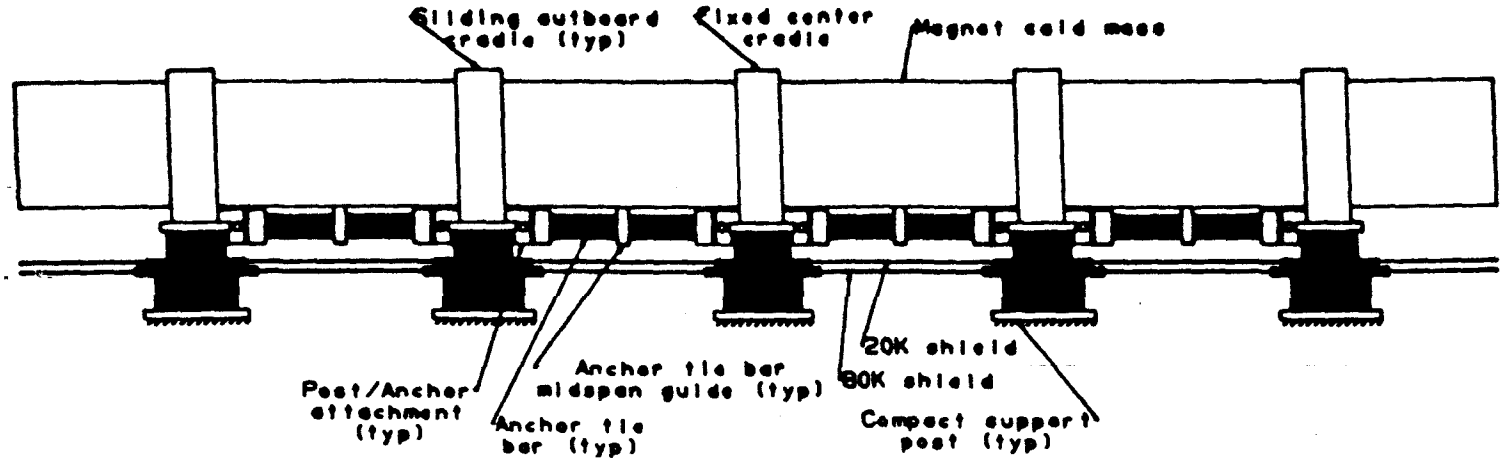

- 5 reentrant support posts with
  GRP inner tubes, 5" OD, 0.129" wall
  G-11CR outer tubes, 7" OD, 0.109" wall

- 4 interconnecting uniaxial GRP tie bars
  126" long, 2" OD, 0.250" wall

- 1 fixed post/cold mass connection
  4 sliding post/cold mass connections

- Q_{80} = 10.5 W
  Q_{20} = 1.6 W
  $Q_{4.5}$ = 0.08 W

- Axial anchor stiffness = 4764 kg/mm (266200 lb/in)

- Axial anchor efficiency = 58.9%

- No conduction heat load associated with the anchor tie bars

- No anchor penetrations through the 80K or 20K shields

Figure 4.7
Design B Suspension System Summary

5. Thermal Shields

The cryostat incorporates two thermal shields that intercept radiant heat flux from the environment and provide heat sinks for the suspension system. The shields surround the cold mass and are operated at 20 and 80K. The geometry of the shield system is as shown by Figure 5.1.

The shields are aluminum, which has high thermal conductivity, forms easily and remains strong and ductile at cryogenic temperatures. The shields are supported by the five support posts of the suspension system. The post-shield interface permits relative axial motion to permit the shields to contract as the cryostat is cooled down. The shields are thermally connected to the post heat intercept rings by copper cables. Extruded aluminum pipes carry the cooling fluids; i.e., 20K helium gas and 77K liquid nitrogen.

Design A

The shields are fabricated from 1/8" thick 6061-T6 aluminum. The cooling pipe extrusions are 6063-T5 aluminum. The shields consist of several rolled and extruded shapes which are attached by fillet welds. These welds provide structural integrity as well as sufficient thermal contact for heat flow.

The shields are attached to the support post heat intercept ring. The post-shield interface is as shown by Figure 5.2.

Design A Experience

The shields' circumferential temperature rises were measured in a comprehensive thermal model (HLM II) and were found to be less than 1K for the 20K and 2K for the 80K shield. The predicted thermal radiation heat leak increases associated with these temperature rises are 5% to 4.5K and 2.5% to 20K. Design heat leak radiation is 0.05 watts to 4.5K and 1.8 watts to 20K. Heat leak increase to 4.5K is then 2.5mW. This is very small as compared to the total 4.5K heat leak 300mW budget.

Support post intercept temperature for the heat sink strap design was predicted from a finite element program and measured in HLM II. Temperature increases from the shield to the intercept were 0.5K for the 20K shield and 5K for the 80K shield. The predicted support post heat leak increases due to these temperature rises are 8% to 4.5K and 10% to 20K.

Mechanical bowing along the length of the shields takes place as the shields are cooled to the steady state operational temperature. Finite element analysis and measurements were performed on a similar shield geometry of an earlier magnet design (no iron) SSC cryostat. The finite element predictions and the measurement results were in good agreement.

The Design A shields performed well. However, the shields were costly to produce and time consuming to assemble. Changes to the shields, therefore, will

be made to reduce component fabrication and assembly time. The primary motivation is to reduce cost rather than to improve upon shield performance.

Design B

The Design B thermal shield will be different from the Design A in several ways:

- There will be two pieces instead of five. Fewer connections will result in reduced assembly time and cost.

- Shields will be thinner, resulting in reduced material and forming costs.

- Heat sink straps will be crimped to their lugs at assembly rather than soldered, thereby reducing assembly time and eliminating the "wing" which is now welded to the support post heat intercept rings.

- The shields will be assembled and fastened by either a riveted, spot welded or crimped connections rather than a fillet weld as shown by Figure 5.3.

- The lower half of the shields will be pulled up along the support posts from the bottom during assembly instead of being split along their bottom and welded. This eliminates the longitudinal weld along the bottom of the shields. This longitudinal weld has poor accessiblility and is therefore time consuming to make. It also can result in considerable shield distortion. The post-shield connection is as shown by Figure 5.4.

- A material change is being evaluated. A possible material is 1100-H18 aluminum. Its thermal conductivity at 20 and 80K is significantly higher than 6061-T6 aluminum and its structural properties are acceptable. The material properties are as presented by Table 5.1.

Table 5.1
Shield Material Properties

Material	Thermal Conductivity (watts/mK) at 20K	Thermal Conductivity (watts/mK) at 80K	Ultimate Strength (Psi)	Yield Strength (Psi)
6061-T6 Al	37	120	45	40
1100-H18 Al	470	340	24	22

Design B Development

- The circumferential temperature rise for thinner shields has been calculated based on a cooling fin analogy. The actual rise will be determined experimentally during the Design B thermal model (HLM III) operation.

- The temperature rise across the crimped connection heat sink straps has been determined experimentally and found to be less than 3% more than across equivalent geometry straps with soldered connections.

- The thermal conductances of the riveted, spot welded and crimped connections are being measured. The test setup is as shown by Figure 5.5. A known heat input is applied to a resistive winding around the end of the shield sample. Thermal conductance is then determined by the temperature rise across the connection.

- Predictions and measurements of shield bowing during cooldown and warmup will be made to establish the structural integrity and elastic nature of the bowing.

- The effects of cyclic relative motion between the shields and the post intercept rings will be evaluated experimentally.

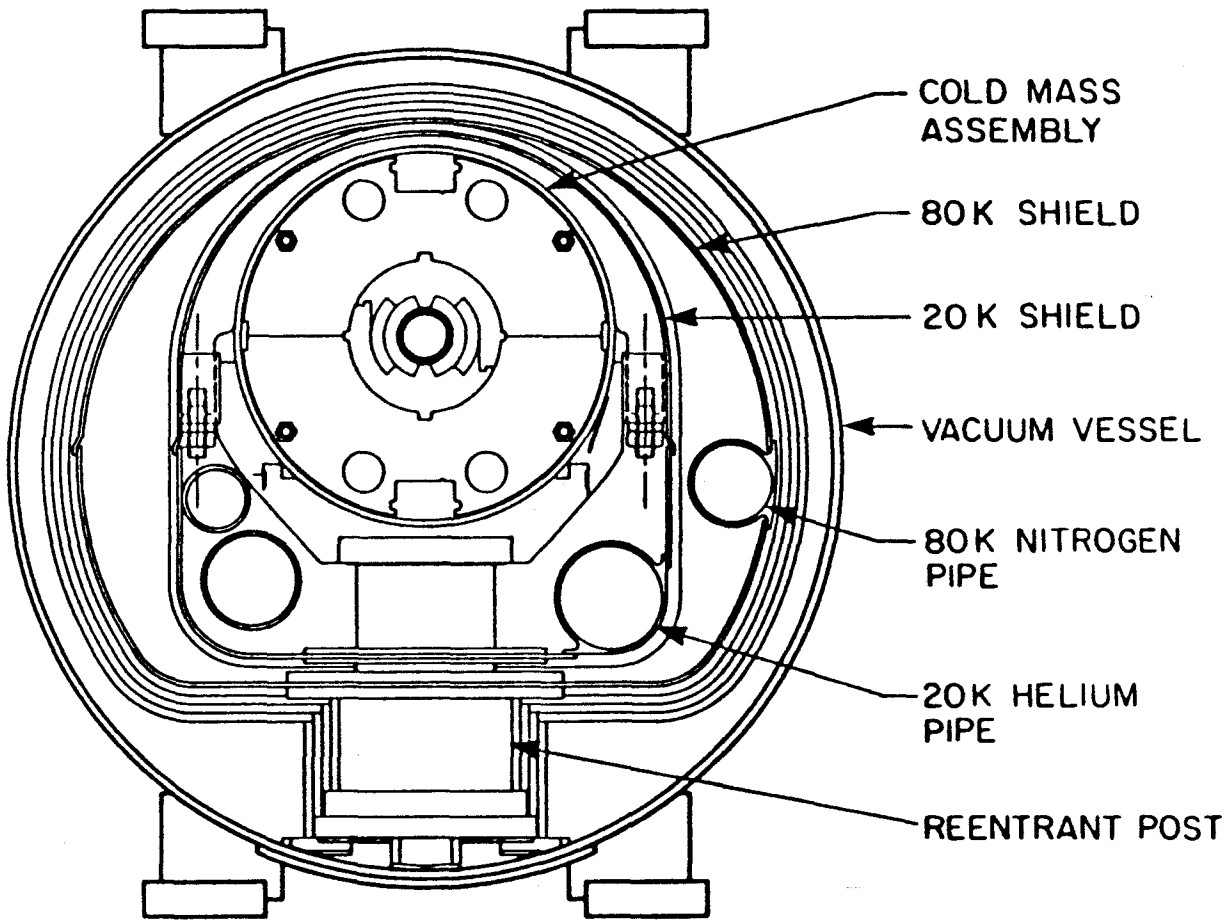

Figure 5.1
Thermal Shield Geometry

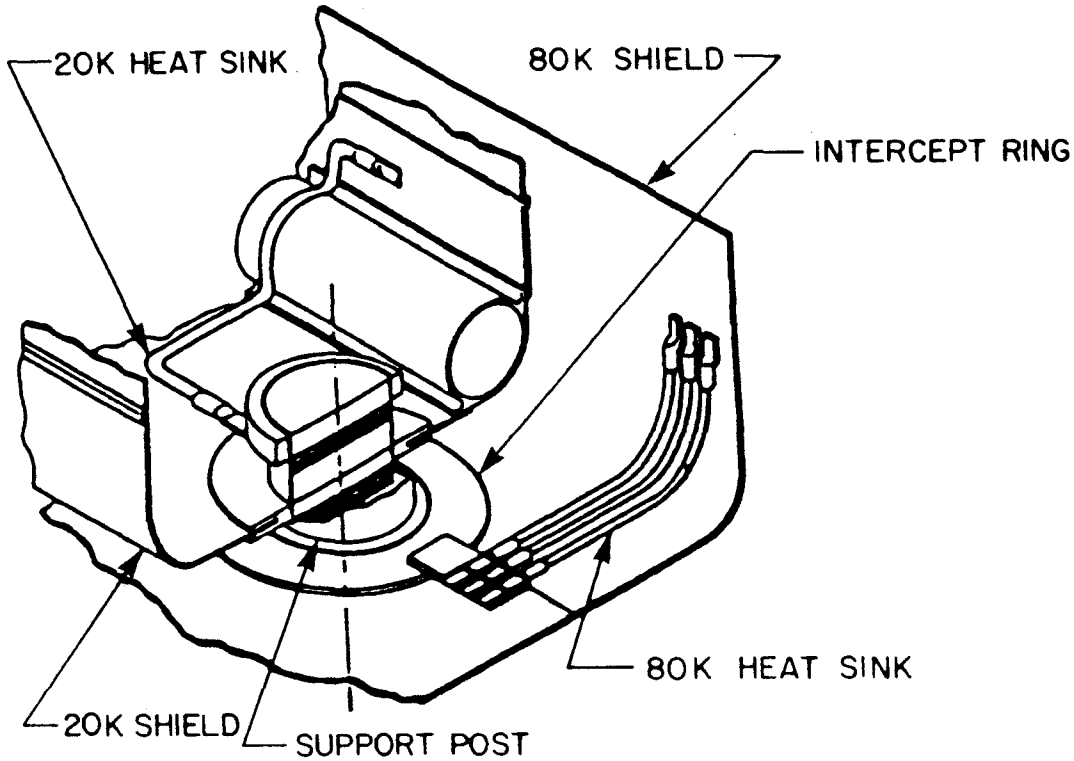

Figure 5.2
Design A Support Post-shield Interface

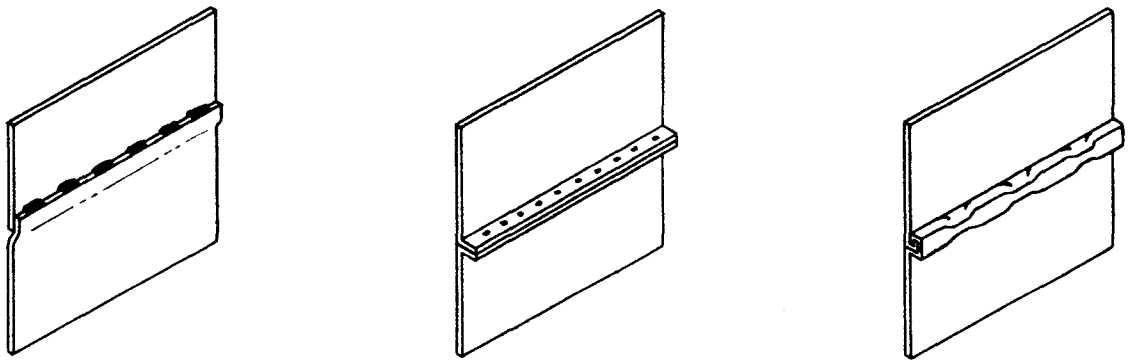

Fillet Weld | **Riveted or Spot Weld** | **Crimped**

Figure 5.3
Shield Connection Method

FERMILAB
LIBRARY

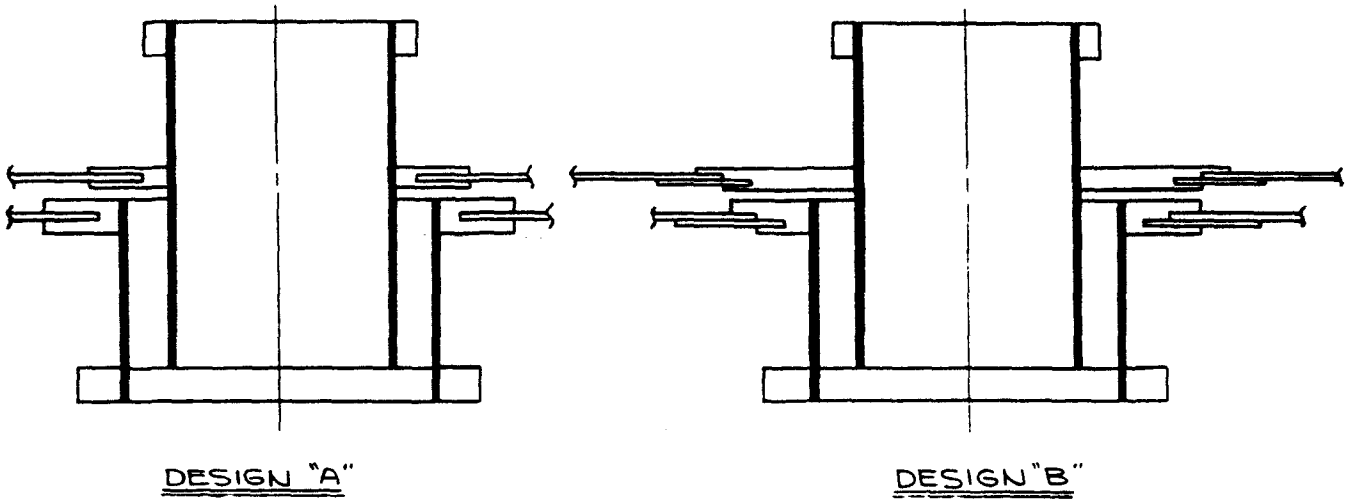

Figure 5.4
Post-Shield Connection

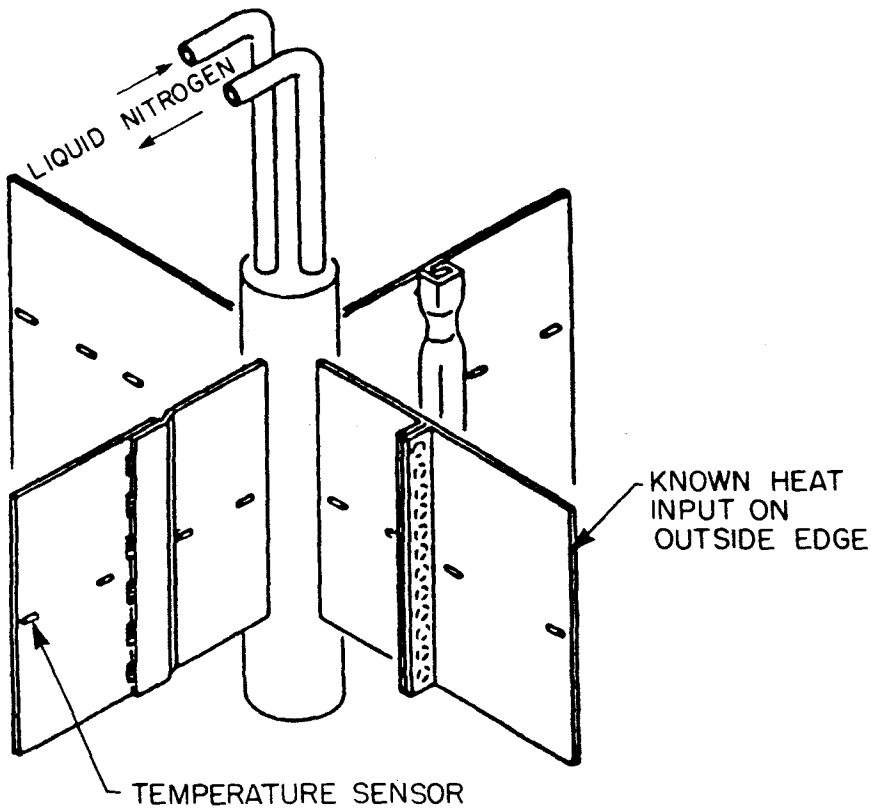

Figure 5.5
Shield Connection Conductance Measurements

6. Insulation

The cryostat insulation system consists of multilayer assemblies of aluminized polymer film, fabricated into blankets and installed as blankets on the cold surfaces. Each blanket is sized to cover the entire shield in a one-piece application.

Design A

The Design A insulation blanket materials are:

(1) A thermal radiation reflective layer made of Double Aluminized Mylar (DAM) film;

and

(2) a spacer material consisting of FiberGlass Mat (FGM) used to separate the reflective layers.

The materials description is as given below.

REFLECTOR

Polyethylene terephthalate film (Mylar) flat sheet, 25 μM thick, Double aluminized, 99.9% pure aluminum, deposition resistance on each side R = 0.9 ± 0.1 ohms per square, thickness >250 angstroms.

SPACER

FiberGlass Mat, random oriented continuous filaments, silane treated, polyester binder 10%, 39.8 g/M^2.

Design A Experience

Fabrication of the DAM/FGM blankets produced blankets of uniform quality, i.e., dimensionally stable, that performed well in meeting the heat leak budget to 80K and within a factor of two in excess of the heat leak budget to 20K, other factors being suspected for the higher than predicted 20K heat leak.

Thermal evaluation by measurement of the DAM/FGM blanket between 300 and 80K indicated that 44 layers of DAM/FGM are required to meet the heat leak budget to 80K. The results of the measurements are shown by Figure 6.1 and are included in Table 6.1.

Table 6.1 Candidate Thermal Insulation Systems for The SSC Magnet 80 K Shield

Insulation System	Data obtained in the heat leak test facility (T_{hot} = 300 K , T_{cold} = 80 K)					Design 80 K insulation system		
	H	N/H	Nq	h_{itl}	K_{eff}	N_t	H_t	w_t
	mm	mm^{-1}	W/m^2	W/m^{2}K	W/mK	layers	mm	kg/m^2
FGM/DAM	6.5	1.69	26.7	0.122	7.19×10^{-5}	44	26.0	3.37
CSN/DAM	8.9	2.93	35.8	0.163	5.55×10^{-5}	59	20.1	3.27
DP-DAM	5.7	4.55	15.9	0.0722	1.59×10^{-5}	26	5.7	0.452

Subsequently, the Design A insulation system for the 80K shield was specified to be an assembly of four blankets each consisting of 13 DAM layers and 12 FGM layers (a total of 52 DAM layers). One blanket consisting of 13 DAM and 12 FGM layers was specified for the 20K shield.

No insulation was installed on the cold mass.

The insulation installation is as shown by Figure 6.2.

DAM/FGM ADVANTAGES

- low thermal conductivity
- low water absorbtion
- high heat capacity
- high radiation resistance
- FGM to DAM adherence via binder
- high compaction resistance
- few layers @ heat flux budget

DAM/FGM DISADVANTAGES

- not user friendly
- user discomfort
  fiberglass slivers
  itchy
- requires protective garments
  full dress coveralls
  inhalation filters
- dulls cutting tools
- binder and fiber fragments migrate within vacuum space and require filters on pumps and are possible contaminants for vacuum isolation valves
- thick blankets
- heavy blankets

Design B

The Design B blanket materials are:

(1) A thermal radiation reflective layer made of Double Aluminized Mylar (DAM) film:

and

(2) a spacer material consisting of Cerex Spunbonded Nylon (CSN) used to separate the reflective layers.

The materials description is as given below.

REFLECTOR

Polyethylene terephthalate film (Mylar) flat sheet, 25 μM thick, Double Aluminized, 99.9% pure aluminium, deposition resistance on each side R = 0.9 * 0.1 ohms per square, thickness > 250 angstroms.

SPACER

Cerex Spunbonded Nylon, 6/6 selfbonded filaments, 81 μM thick, 10.2 g/M^2, two spunbonded layers per spacer.

Each blanket is an assembly of 16 layers of DAM and 15 double layers of CSN, alternately stacked on top of each other to form a blanket of given length and width.

Thermal evaluation of the DAM/CSN blanket between 300 and 80K indicated that 59 layers of DAM/CSN are required to meet the heat leak budget to 80K.

Subsequently, the Design B insulation system for the 80K shield was specified to be an assembly of four blankets each consisting of 16 DAM layers and 15 double CSN layers (a total of 64 DAM layers). One blanket consisting of 16 DAM and 15 double CSN layers was specified for the 20K shield.

To secure and register the insulation layers to each other, the layers will be sewn together. After the blanket layers have been secured, holes and access cuts through the blanket will be made to allow blanket installation around the support posts.

Insulation will be installed directly onto the cryostat cold mass and will serve to impede gas conduction heat transfer to the cold mass by residual gases and from desorbed gases released from cryostat surfaces during thermal upset conditions. The intent of the insulation is to act as a heat absorbing buffer surrounding the cold mass; to slow the effects of transient heat loads by reducing the rate of heat transfer to the cold mass, thereby dampening the response time of the cold mass to the upset condition and providing more time for system operation to recover from the upset condition. Given that the purpose of the insulation on the cold mass is only to impede gas conduction, this function can be accomplished with minimal labor by draping the cold mass with a full length blanket, and cutting and spiral wrapping the blanket width circumferentially around the cold mass to form a series of sleeves of insulation around the cold mass. A 72" wide blanket would wrap around the 10.75" diameter cold mass with two complete turns. At each location of a cold mass support and across the blanket width, the blanket is cut through in two places such that the cut lines bridge the area of the cold mass slide connection. The blanket between the slide connections is then spiral wrapped around the cold mass allowing the insulation at the slide connections to hang loosely over the slide connections. The loose insulation is then trimmed from the blanket assembly. The cold mass insulation is as shown by Figure 6.3. A single blanket consisting of 5 DAM layers and 4 double CSN layers can be assembled in this manner. At a higher installation cost, a more restrictive application with better performance can be obtained by assembling multiple blankets of fewer layers.

Prototype DAM/CSN blankets have been employed with success for several of the Design A model magnets. Preference was indicated for the DAM/CSN blankets over the DAM/FGM blankets in spite of the poor quality of the prototype DAM/CSN blankets. The assembly of the

DAM/CSN blankets of Design B are similar to the blankets of the previous design. Design B differs in that the seams are made by overlapping individual layers (layer-by-layer) within each blanket. Tape is used sparingly to secure layers.

DAM/CSN ADVANTAGES

- user friendly
- installation ease
- high layer density
  thin blanket @ heat flux budget
- dimensional gain in vacuum space
- cryostat cross section unchanged
- straight substitution CSN for FGM
- lower weight blankets

DAM/CSN DISADVANTAGES

- hygroscopic; 8% by weight
- lower RAD resistance
- high RAD gas evolution
- most DAM @ heat flux budget
- requires securing of layers

Vendor inability to deliver suitable quality insulation blankets and the reluctance of several vendors contacted to develop blanket fabrication techniques has made it necessary to initiate an in-house blanket production development program. To accomplish this task, a large diameter winding mandrel has been constructed and will be fitted with supply spools for the blanket component materials. The intent is to wrap the appropriate number of blanket layers, i.e., the DAM together with the CSN spacer material around the circumference of the mandrel, sew the blanket layers together and cut the holes for the cryostat supports while the blanket is still on the large mandrel. Once the layers are secured by sewing, a single cut across the width of the insulation will produce blanket of sufficient length, width, and layer density with extra material built into the assembly to allow for thermal contraction differences between the insulation and the surface on which the blanket is installed.

The approach under evaluation for the fabrication of the blankets using DAM and CSN materials is as shown by Figures 6.4 and 6.5.

The Design B insulation system is as shown by Figure 6.6.

Design B Development

- The performance of candidate insulation systems between 80 and 4.5K will be measured in the Heat Leak Test Facility.

- Blankets with alternate or no spacer materials and of a hybrid nature will be evaluated on the basis of radiation resistance, pumpdown, compactness, cost, etc.

- Blanket fabrication and installation techniques will be refined during the fabrication of the balance of the Design A long magnet models.

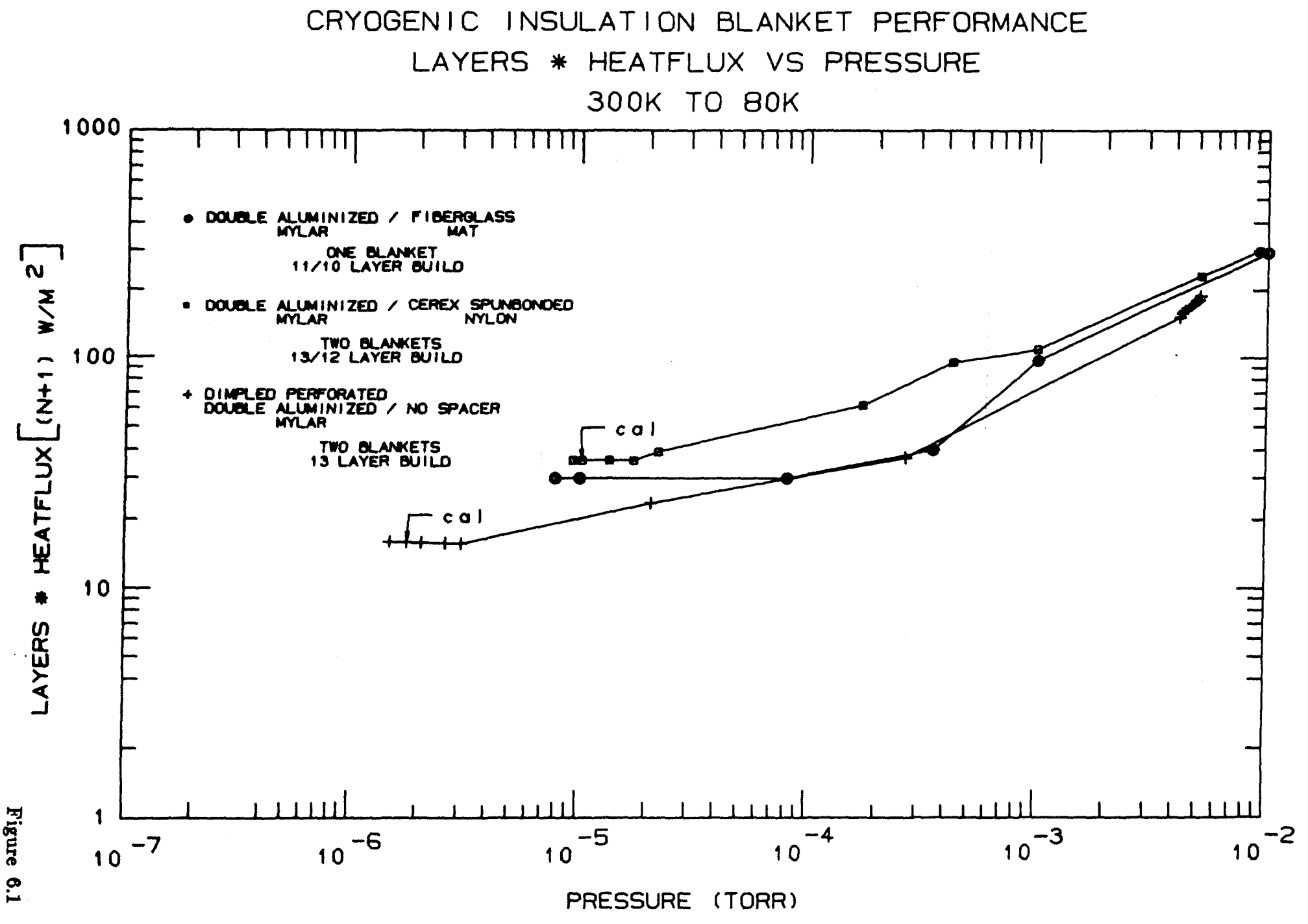
CRYOGENIC INSULATION BLANKET PERFORMANCE
LAYERS * HEATFLUX VS PRESSURE
300K TO 80K
● DOUBLE ALUMINIZED / FIBERGLASS
MYLAR MAT
ONE BLANKET
11/10 LAYER BUILD
▪ DOUBLE ALUMINIZED / CEREX SPUNBONDED
MYLAR NYLON
TWO BLANKETS
13/12 LAYER BUILD
+ DIMPLED PERFORATED
DOUBLE ALUMINIZED / NO SPACER
MYLAR
TWO BLANKETS
13 LAYER BUILD
cal
cal
LAYERS * HEATFLUX [(N+1) W/M 2]
1000
100
10
1
10 -7
10 -6
10 -5
10 -4
10 -3
10 -2
PRESSURE (TORR)

Figure 6.1

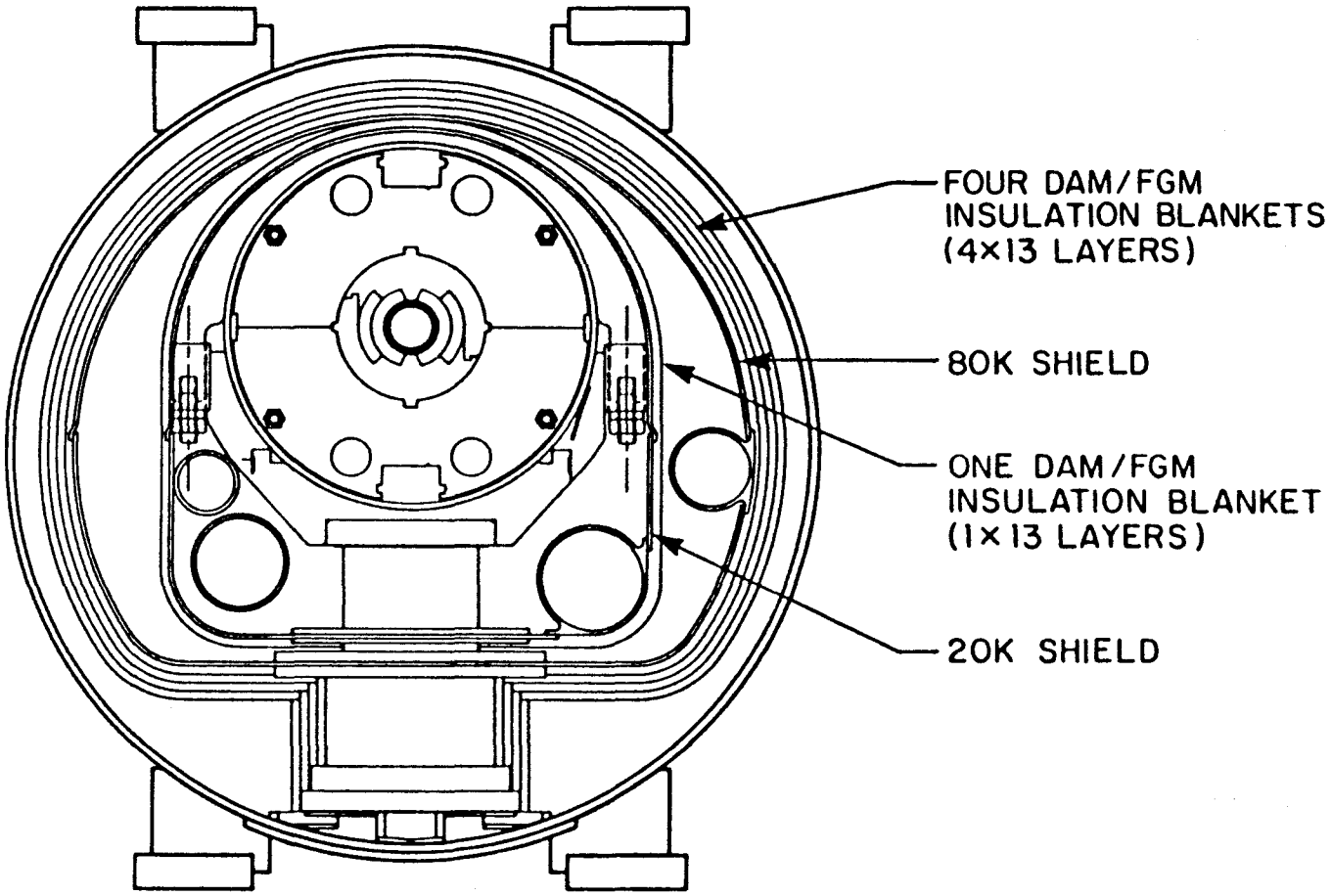

Figure 6.2
Design A Insulation Installation

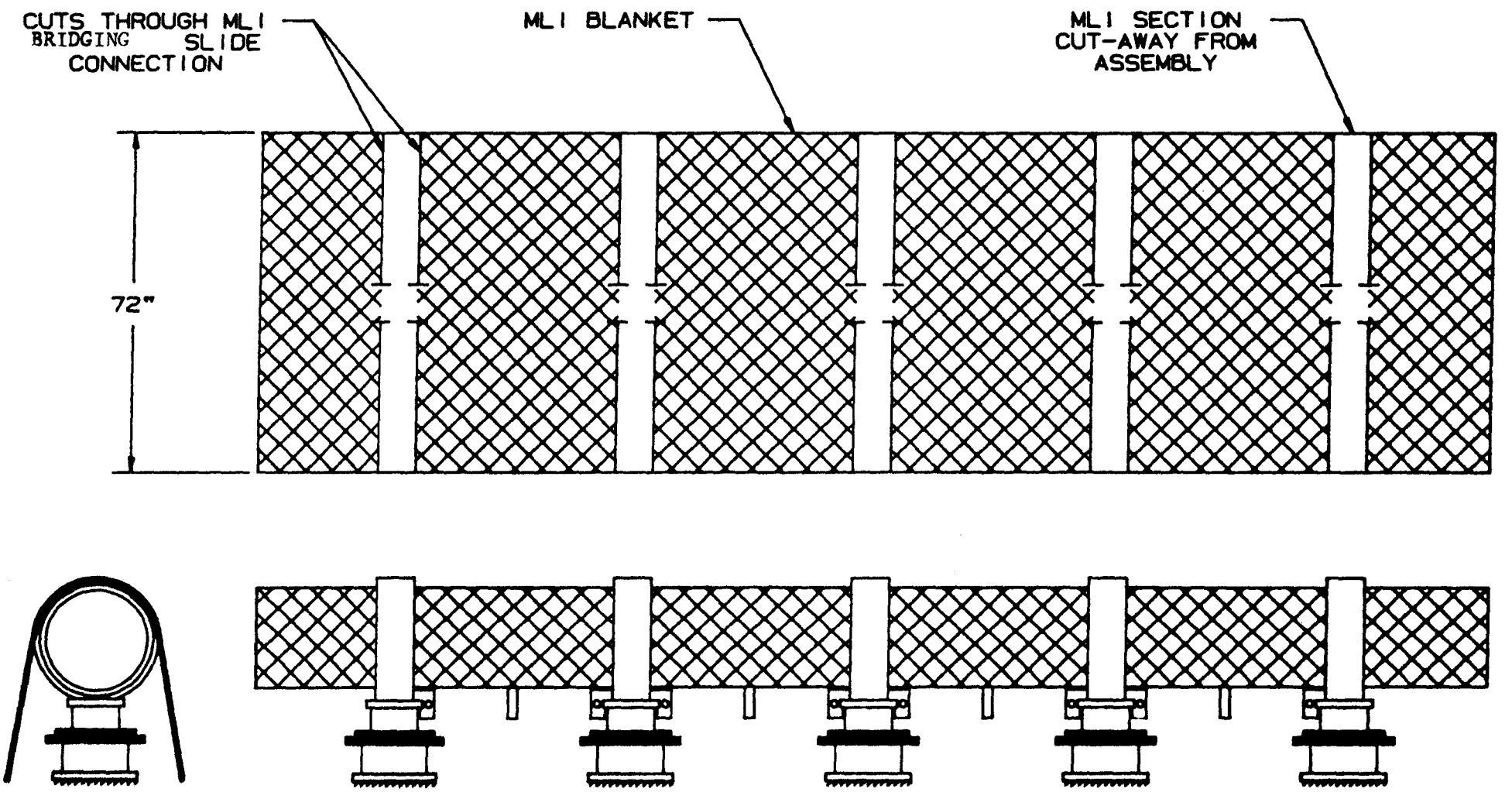

Figure 6.3
Cold Mass Insulation

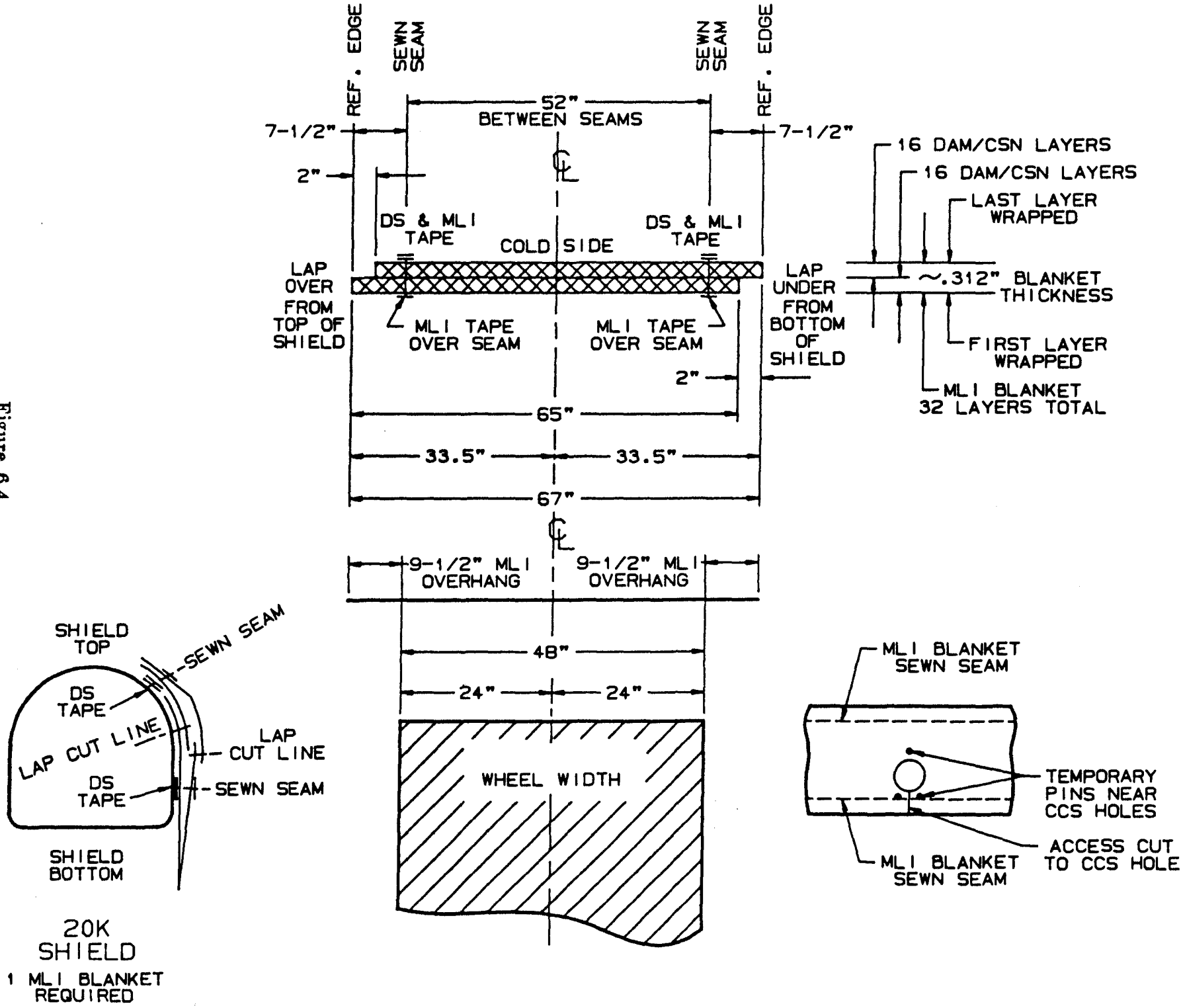

Figure 6.4.
20K Insulation Blanket Fabrication Layout

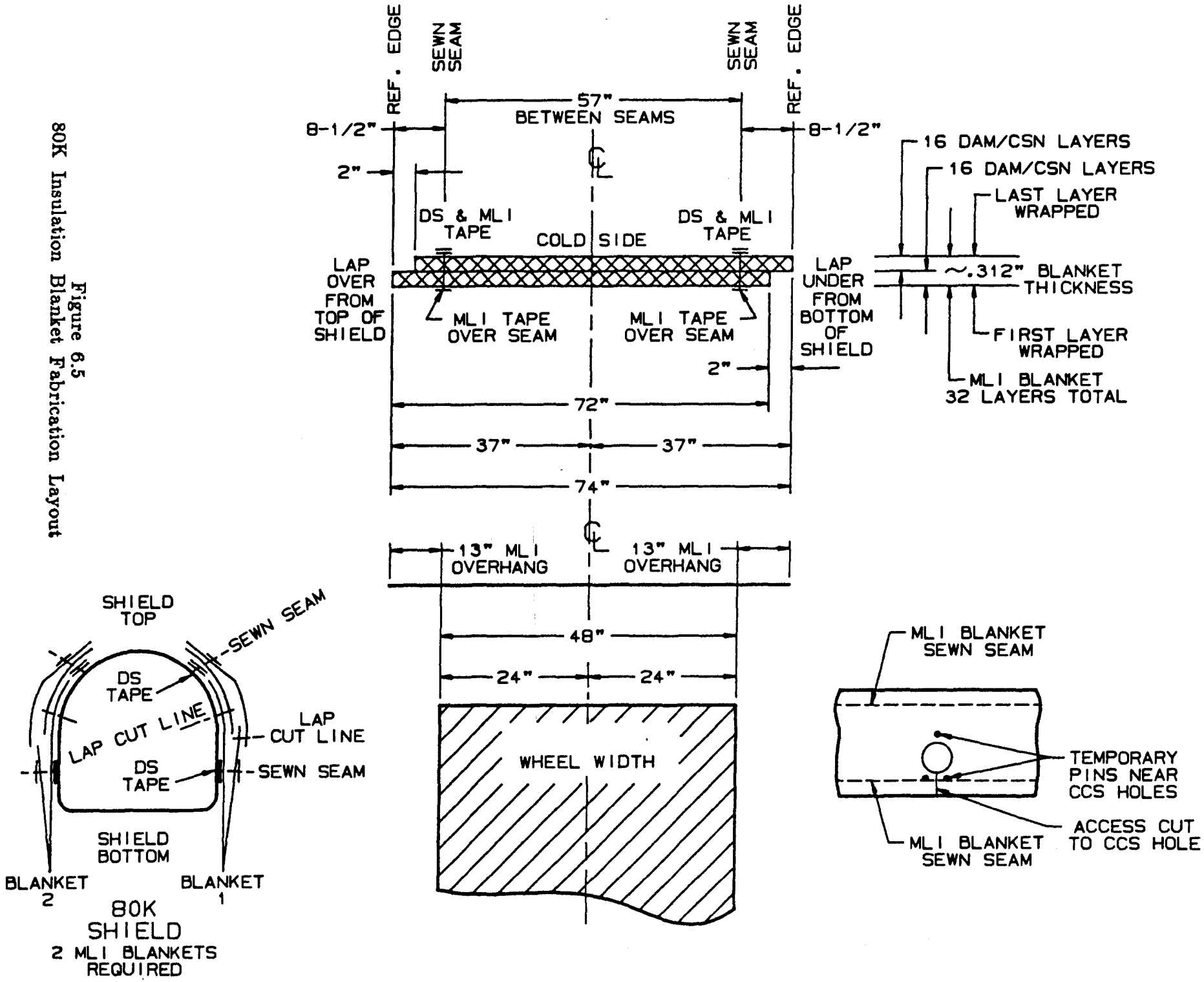

Figure 6.5
80K Insulation Blanket Fabrication Layout

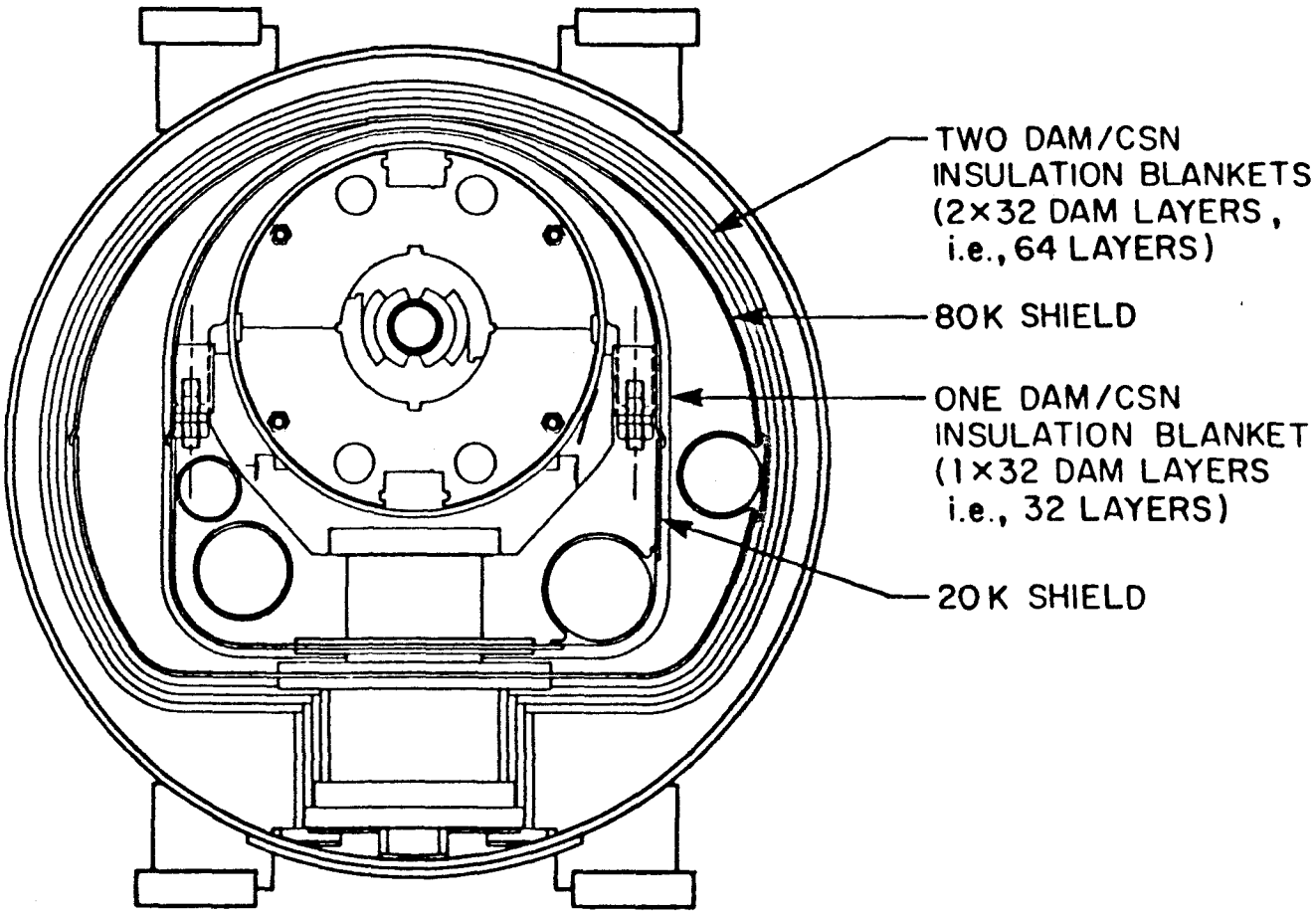

Figure 6.6
Design B Insulation Installation

7. Vacuum Vessel.

The cryostat vacuum vessel provides the insulating vacuum required for the control of heat transfer to the internal components by residual gas conduction and provides for the transfer of the weight of the cryostat internal structure; i.e., cold mass, shields, piping, etc., to ground. The vacuum vessel is circular in cross section, is equipped with bellows at its ends for interconnection and is connected to ground by means of foot assemblies.

Design A

Design A magnets are supported at five points along their length by feet welded to the vacuum vessel. The cold mass is supported at the same five points. The number of supports was determined such that the maximum cold mass deflection between supports was limited to 0.010" as specified in the initial version of the Fermilab SSC Magnet Cryostat Design Criteria. The spacing between supports was determined to minimize the sag of the cold mass, given five supports. The Design A vacuum vessel is as shown by Figure 7.1.

The vessel shell and foot assemblies are made from mild steel; i.e., AISI C1020 The shell is 24" in diameter and is 1/4" thick. The shell is a full length tube with the foot assemblies, with the reinforcing rings being fabricated around the shell during vessel assembly.

The completed internal cryostat assembly is inserted, by sliding, into the vacuum vessel by means of a tow tray-plate assembly installed at the bottom of the vessel shell.

Design A Experience

The Design A vacuum vessel has been and will be incorporated into one short (4.5m) and five long (16.6m) model magnets and one full length thermal model (HLM II) with good success. The vessel is buildable and the slide-in insertion method works well for both assembly and disassembly.

Design B

The Design B vacuum vessel will be different from the Design A in several ways:

- For installation and alignment reasons, five external supports overconstrain the installed position of the vacuum vessel. Two external supports suffice to fix the location of the magnet assembly. However, two supports are not sufficient to support the cold mass. The static sag of a cold mass supported only at two points is nearly 0.5 inches. The solution selected is to retain five internal support posts between the cold mass and vacuum vessel and to eliminate three of the five external feet.

In order to minimize cold mass deflections, the spacing between internal cryostat supports is the same as that used in Design A; namely 0.00", ±136.25", and ±272.50". Minimizing the static sag of the cold assembly minimizes the adverse affects on coil centerline position caused by material property and dimensional uncertainties. The cold mass deflection as a function of position along the magnet is shown in Figure 7.2.

A reinforcing ring is welded to the vacuum vessel at the mounting positions of the internal supports. These reinforcing rings reduce bending stresses in the vacuum vessel when loads are imposed on the cold mass assembly. Reinforcing rings are also required at the external foot locations to support the weight of the upper magnet assembly. In Design B the external support feet are located at the ±136.25" post positions as shown in Figure 7.3. This configuration requires that the vacuum vessel be pre-curved to offset the effects of the static sag of the vacuum vessel due to the weight of the cold mass. The required curve is approximately 3/8" from center to end.

The vacuum vessel will be fabricated from pre-fabricated, full section reinforcing rings connected by short sections of tubing. The full rings are more mass producible as subassemblies and will reduce final vessel assembly time and cost. Since the support locations are determined by assembly tooling which controls the position of the rings, short lengths of tubing are used to interconnect and fix the relative ring positions. This 'segmented' assembly scheme also facilitates the pre-curving of the final vacuum vessel assembly.

A typical vessel and foot assembly detail is shown in Figure 7.4. A section through a reinforcing ring assembly in a non-foot location is shown in Figure 7.5.

If, for any reason, the pre-curving scheme proves to be impractical, the external foot locations can be moved to a more optimal position with respect to vacuum vessel deflections. Locating the external supports at ±180.00" eliminates the need for pre-curving because it minimizes the vacuum vessel sag. The drawback is that it requires seven reinforcing rings rather than the five planned for Design B, thus increasing the number of parts and their subsequent cost.

- The material will be SA516 steel. This material provides improved reduced temperature ductility over mild steel with a minor cost penalty. Low temperature impact properties and costs are as given by Figure 7.6 and Table 7.1 respectively.

Table 7.1
Relative Costs of Vacuum Vessel Pipe vs Material

Material		Cost $/kg
• SA516	Grade 60	1.0
	Grade 70	1.1
• SA302	Grade C	1.6
• SA333	Grade 3	2.0
• 5.4 mm mild steel structure clad with 1.0 mm 304 SST		5.4

Notes:

- Above costs are for a single unit whose length is 6-12m with one weld seam.
- A 10% cost reduction for mass production is estimated.
- A "US" budgetary quote for pipe shows a 1.16 cost factor for SA 516($26/ft) vs ordinary mild steel pipe ($22.50/ft).

Design B Development

• A prototype Design B type vacuum vessel, fabricated from mild steel, will be utilized for Long Magnet Model D0011 and a full length thermal model (HLM III). Tooling for vessel assembly and cold mass insertion will be evaluated.

• Stress analysis of the vessel will continue with the Design B geometry and for the seismic and shipping and handling environments. Structural modifications will be made as necessary.

• Shipping and handling fixtures will be developed. Under consideration are an axial shipping restraint and a shipping container.

• The mass producibility of the reinforcing ring assemblies will be evaluated.

Design A Support Placement

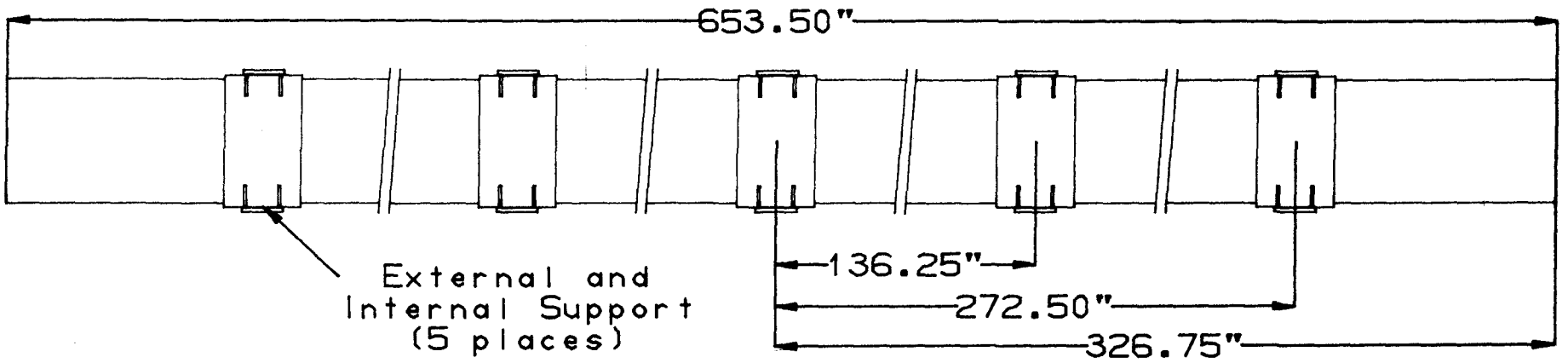

Figure 7.1

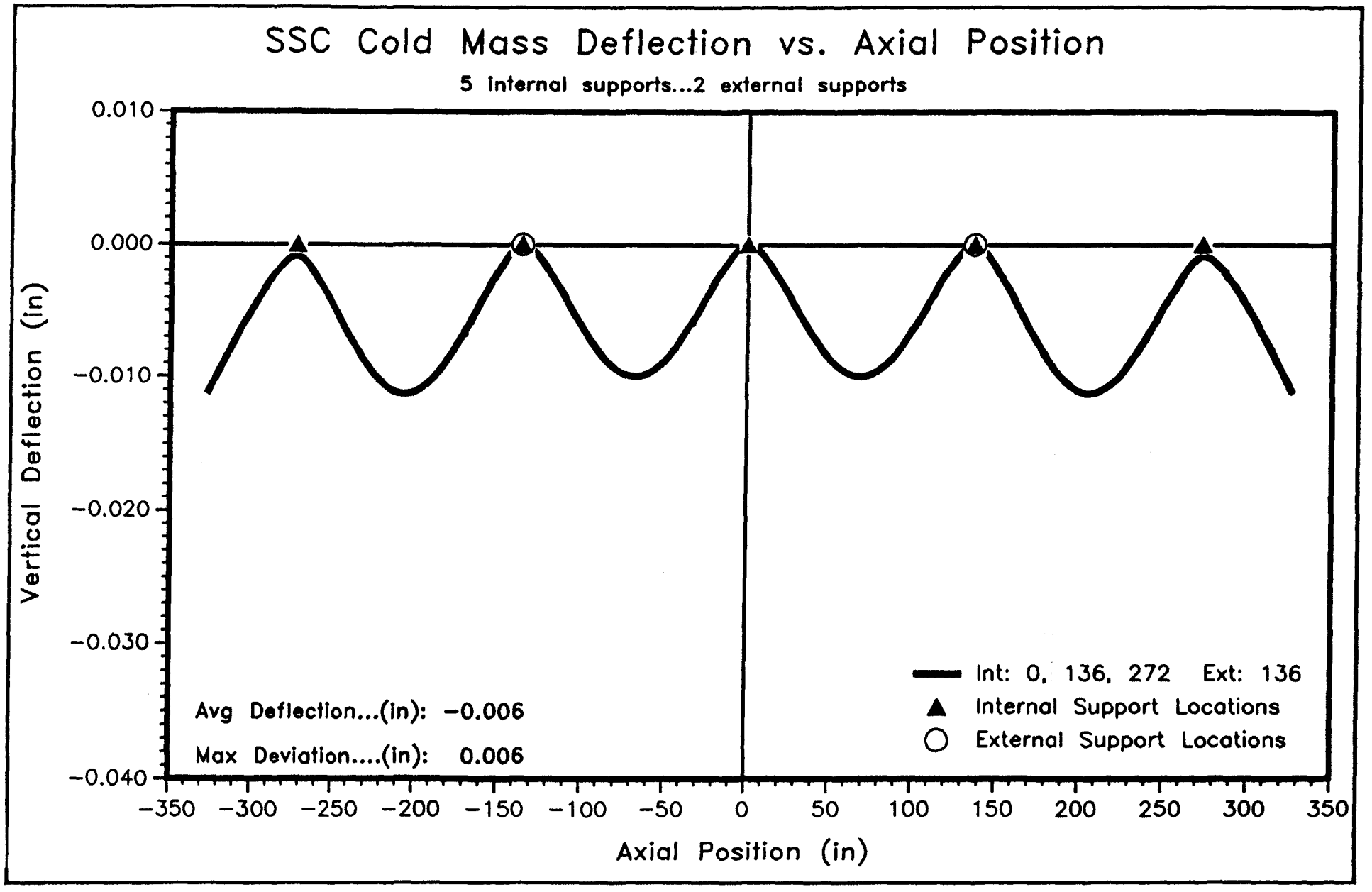
SSC Cold Mass Deflection vs. Axial Position
5 internal supports...2 external supports
0.010
0.000
-0.010
-0.020
-0.030
-0.040
Vertical Deflection (in)
-350
-300
-250
-200
-150
-100
-50
0
50
100
150
200
250
300
350
Axial Position (in)
Avg Deflection...(in): -0.006
Max Deviation....(in): 0.006
Int: 0, 136, 272 Ext: 136
Internal Support Locations
External Support Locations

Figure 7.2

Proposed Design B Support Placement

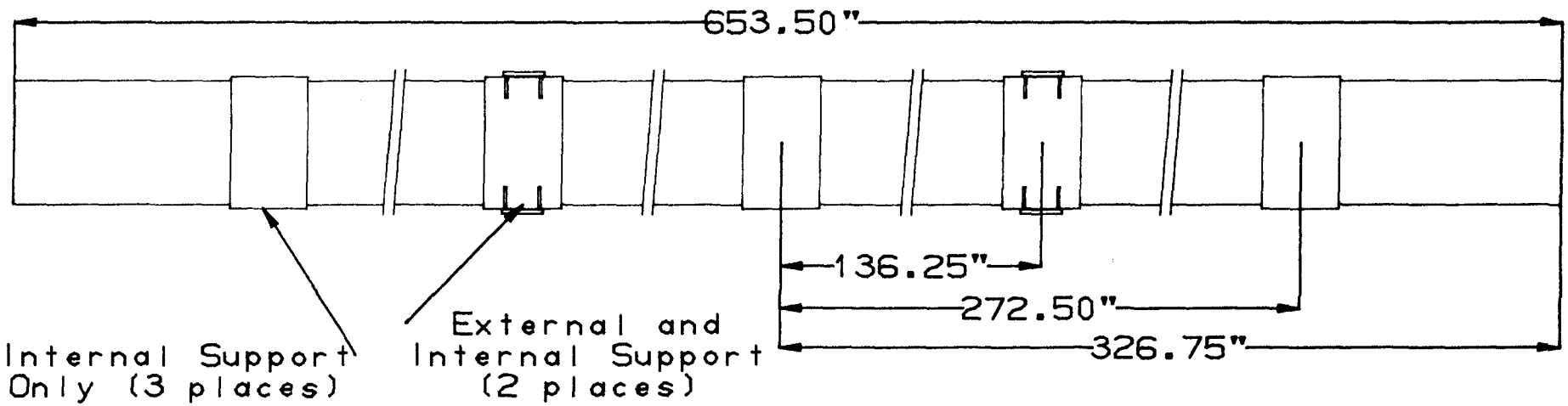

Figure 7.3

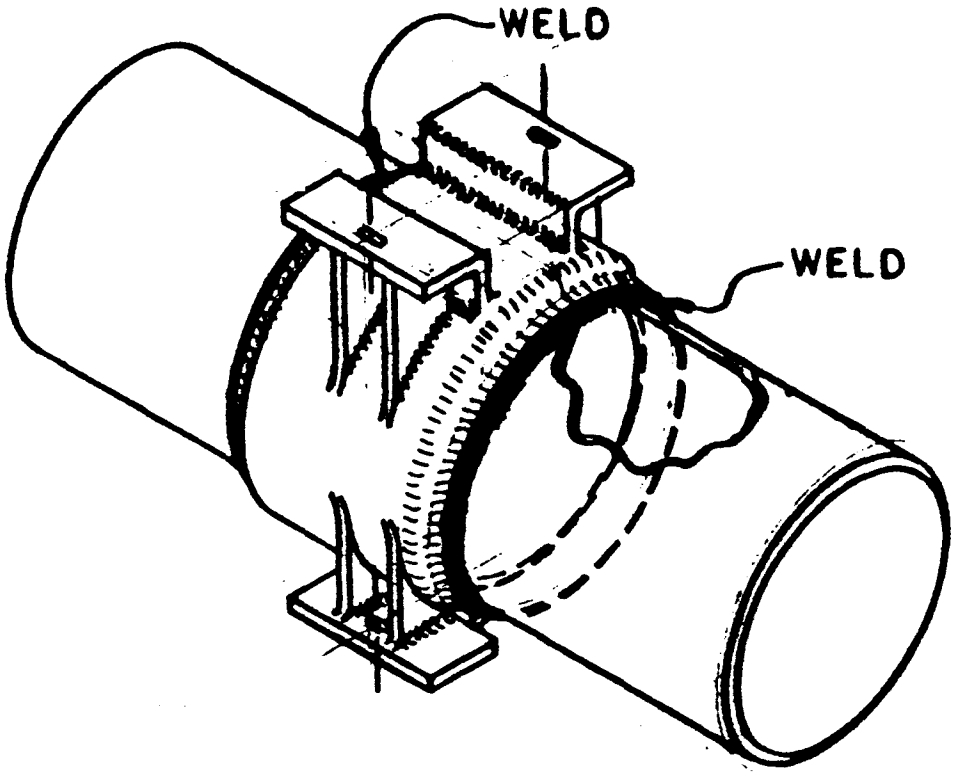

Figure 7.4

SSC DIPOLE
VACUUM VESSEL CONNECTION AT SUPPORT POINT
-TYP. (5) PLACES-

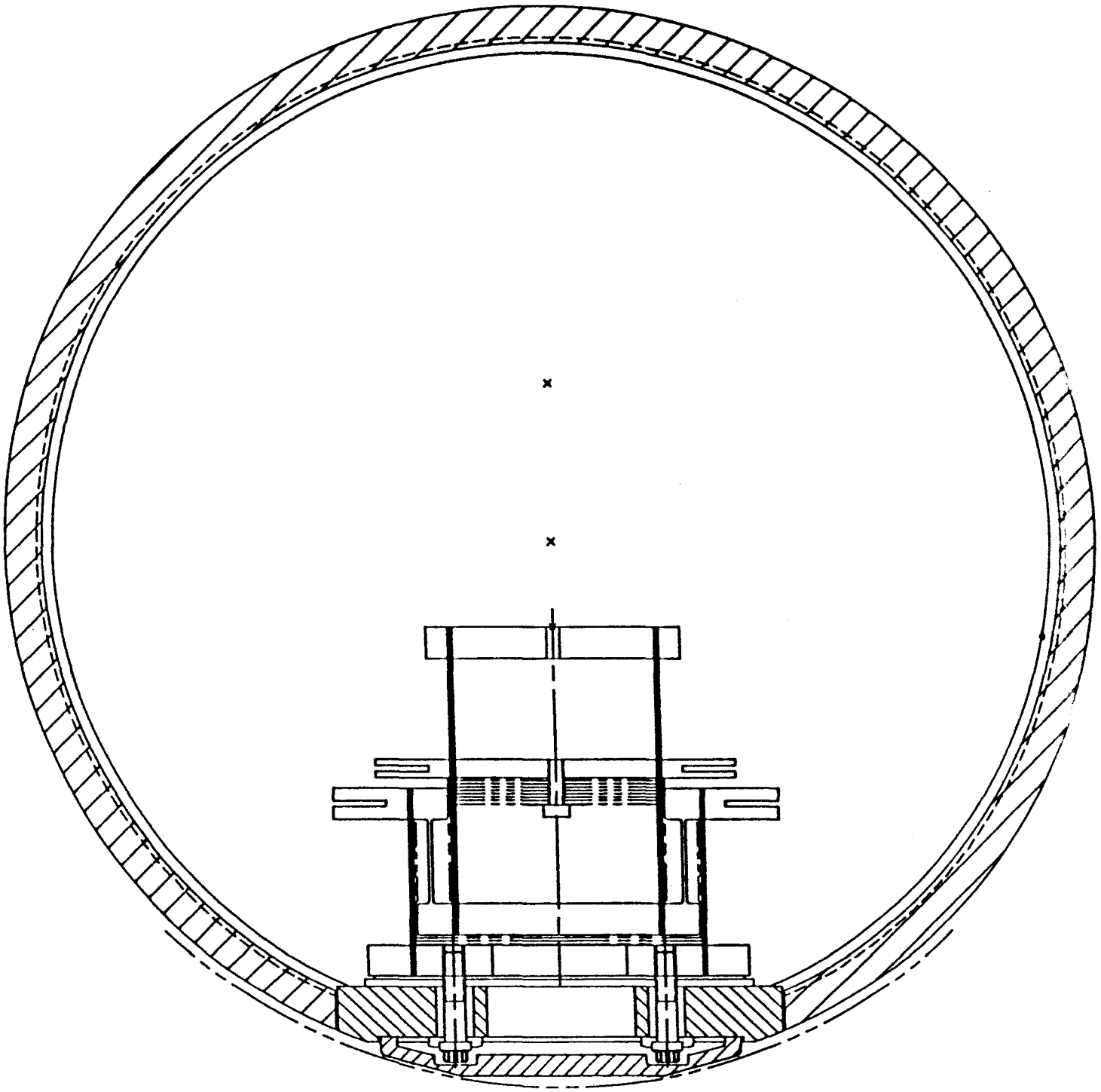

Figure 7.5

Reinforcing Ring in Non-foot Location

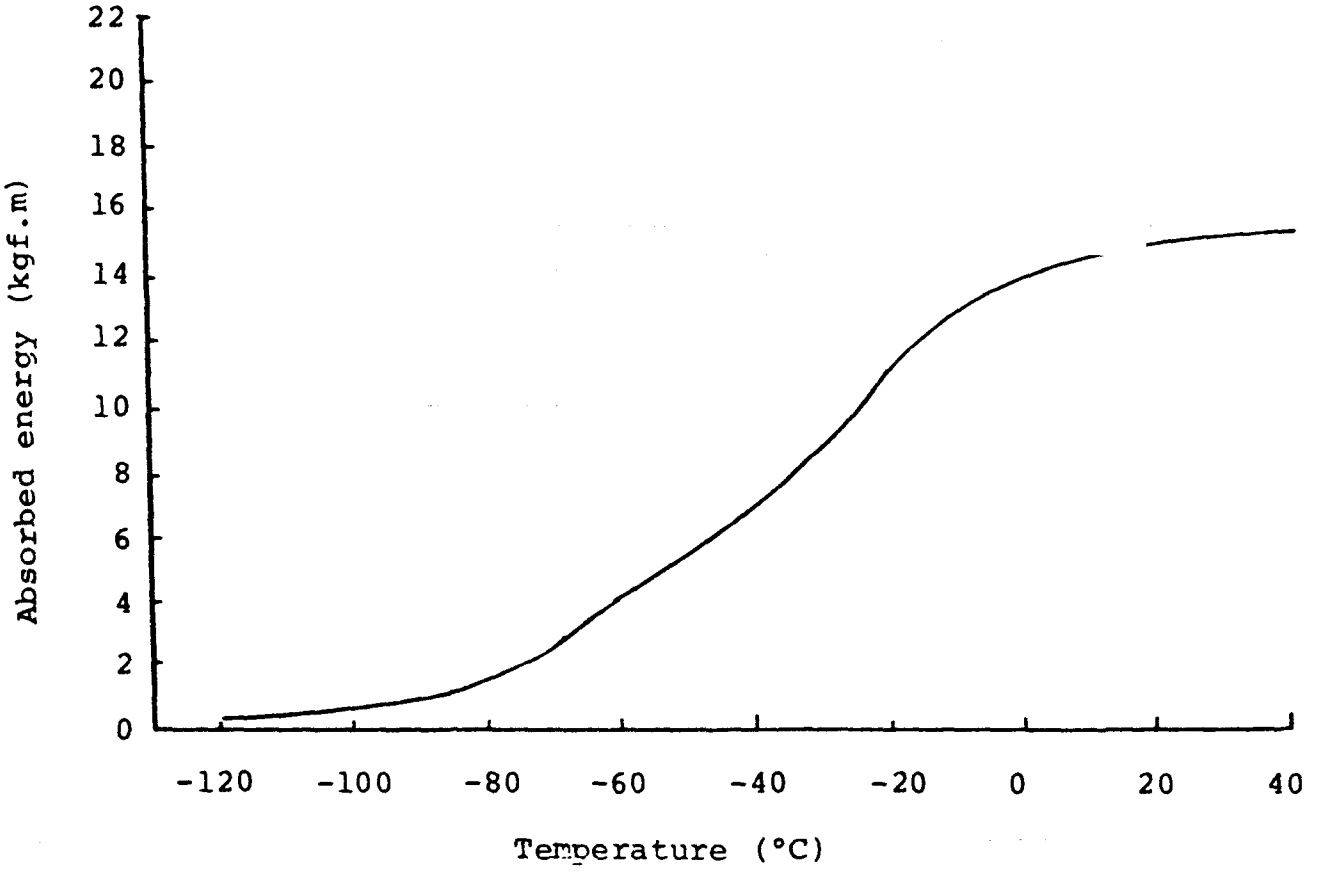

Figure 7.6
Charpy Impact Test Results (SA516 Grade 70)

8. Interconnection

The cryostat interconnection consists of seven pipes having bellows, which accomodate the axial motion due to cooldown and warmup, that must be connected. All are pipes stainless steel except the vacuum shell connection, which is carbon steel. All will be welded when the magnet is installed and will be cut apart when the magnet is removed. The geometry of the interconnection is as shown by Figure 8.1.

All connections will be welded with computer controlled automatic welding units and will be cut apart with orbital pipe cutters. The pipe cutters will be able to operate pneumatically or hydraulically. They are specially designed for the cryostat's small clearances. Typical welding unit configurations are as shown by Figure 8.2. A typical orbital pipe cutter is as shown by Figure 8.3.

Design A

The interconnection is developed from the cold mass centerline out. The first connection to be made is the beam tube. The beam tube bellows has a stainless steel flange which connects to a flange on the beam tube of the magnet. The flanges are welded together by an automatic welding unit, consuming a disk shaped washer which is placed between the flanges. The washer is cut out when the connection is broken. The cut is made by clamping the orbital pipe cutter onto a fixture which mounts on the bellows. The beam tube junction is as shown by Figure 8.4.

The cold mass outer helium containment shell connection is then made. It is a fillet weld, with material being added by the welding unit. The magnet is disconnected by removing the fillet weld with an orbital pipe cutter. Both the welding unit and the pipe cutter mount onto the bellows sleeve. The cold mass connection is as shown by Figure 8.5.

The next pipes to be welded are the four small pipes surrounding the cold mass. In Design A this connection consists of a stainless steel washer which is consumed during welding. The washer is cut out when the magnet is to be disconnected. A typical piping junction is as shown by Figure 8.6.

The shields are then connected. The interconnection shield pieces are made of two pieces of aluminum. They attach as shown with a hinge arrangement on one side and rivets on the other. Small welds attach the magnet shield to the interconnection shield on one side, primarily for thermal contract. The other side is unattached but overlaps enough for the magnet to contract upon cooldown. The shields are insulated as they are on the body of the magnet. The shield junction is as shown by Figure 8.7.

The final connection to be made is the vacuum vessel shell. It is connected and disconnected exactly as the cold mass. An orbital welder and pipe cutter are used.

Design A Experience

The Design A cryostat bellows are 321 stainless steel formed bellows. Pressure requirements are 60 psi normal and 300 psi abnormal internal pressure for all except the vacuum bellows. The vacuum bellows specification is 15 psi normal external and 75 psi normal internal pressure.

All bellows except the vacuum bellows were tested. The test procedure was as follows:

- Initial vacuum leak check
- 50 extension-compression cycles at liquid nitrogen temperature
- Vacuum leak check
- Hydrostatically pressurize to 20 atmospheres internally
- Hydrostatically pressurize to 25 atmospheres internally
- Vacuum leak check
- Repeat steps 2 through 6

The bellows test results are as given by Table 8.1.

Table 8.1

Bellows Test Results

Bellows	Cycles to failure
LHe return	175
GHe return	459
20K shield	No failure at 600
80K shield	100
Cold mass	No failure at 100

The bellows as tested will satisfy the Magnet System Design Requirements for 20 cooldown-warmup cycles. Further testing is planned.

Magnets D001, D002 and D00X and SD13 have been successfully connected and disconnected using the Design A interconnection.

Design B

Several problems were encountered in the making of the Design A interconnection. Design B offers solutions to these problems.

Cold mass connection problems:

- The radial clearances needed by the welding unit and pipe cutter make it necessary to remove all four cryostat pipes before the cold mass bellows is removed.

- The pipe cutter must cut beyond the surface of the cold mass flange to remove the weld penetration. This damages the surface of the cold mass end flange.

Design B solution:

- Mount the welding unit on the cold mass end flange, causing it to require less radial clearance.

- Obtain a lower clearance pipe cutter which feeds axially.

Design B solution advantages:

- The cutter does not need to cut radially beyond the fillet to remove the weld penetration. Therefore the weld can be removed without damaging the cold mass end flange.

- The area inside the cold mass is accessible without having to remove any of the other pipes.

- The 4.5 K helium return pipes, which are near the tunnel wall are accessible without having to reach around the cold mass. This greatly reduces the time needed to connect and disconnect a magnet.

- The four cold piping bellows will not need to be removed from one end of the magnet. These bellows become part of the magnet and will only be welded and cut off on one end. This eliminates 4 welds and 4 cuts per end.

Helium return and shield pipe problems:

- The bellows which have spring rates in excess of 1000 lb./in. are very difficult to mechanically compress.

- Axial offsets in the pipes from magnet to magnet often make the pipes impossible to align with the automatic welder.

Design B solution:

- Use a sleeve instead of a consumable washer as shown by Figure 8.8.

- Use 316L stainless steel bellows to improve extension-compression cycle life.

Design B solution advantages:

- Bellows do not need to be compressed at assembly.
- Self aligning.
- Longitudinal tolerances in pipe position are taken up by the gap between pipes, allowing a smaller bellows travel to be specified.
- Longer bellows life.

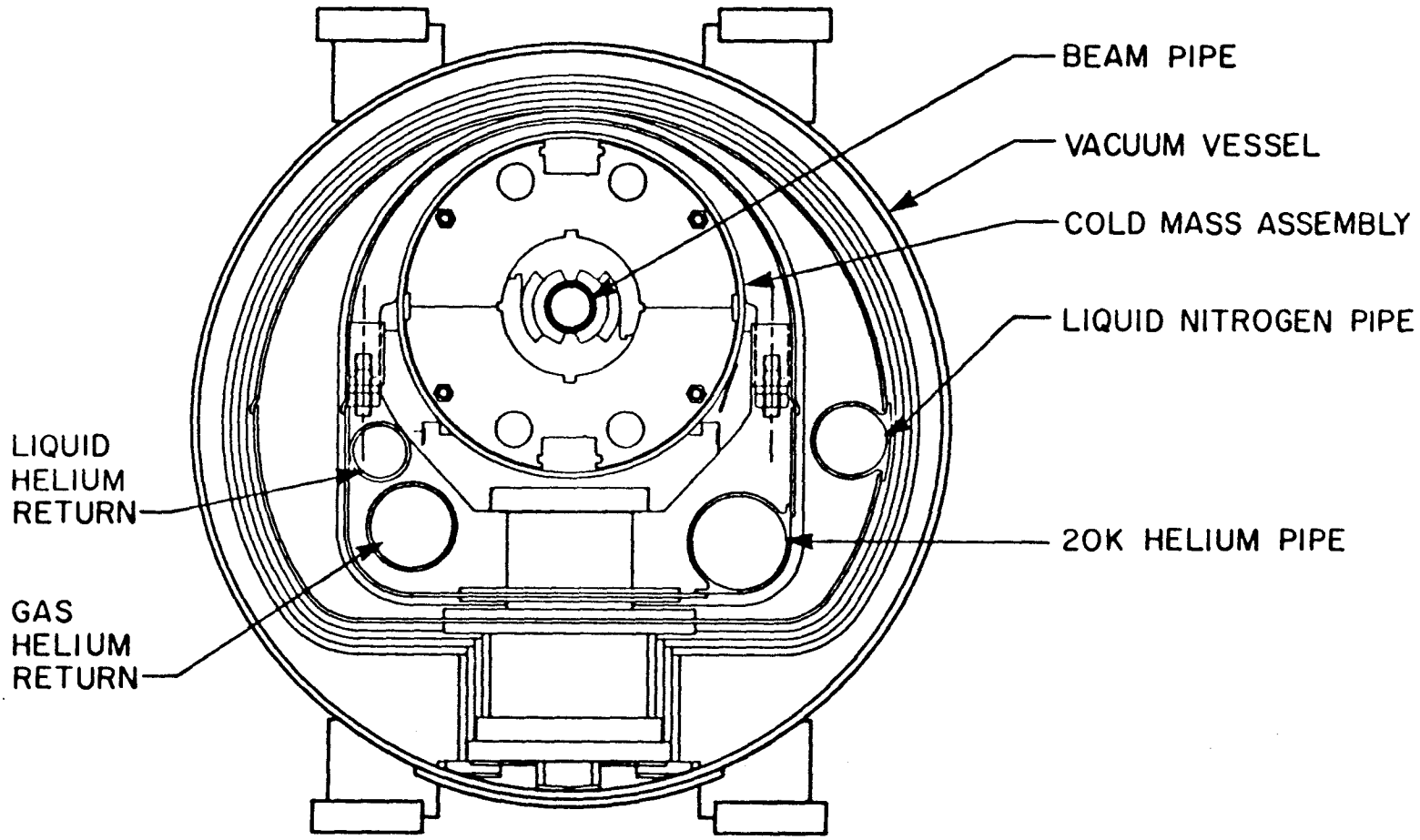

Figure 8.1
Cryostat Connections

WELDING UNIT FOR COLD MASS AND VACUUM VESSEL

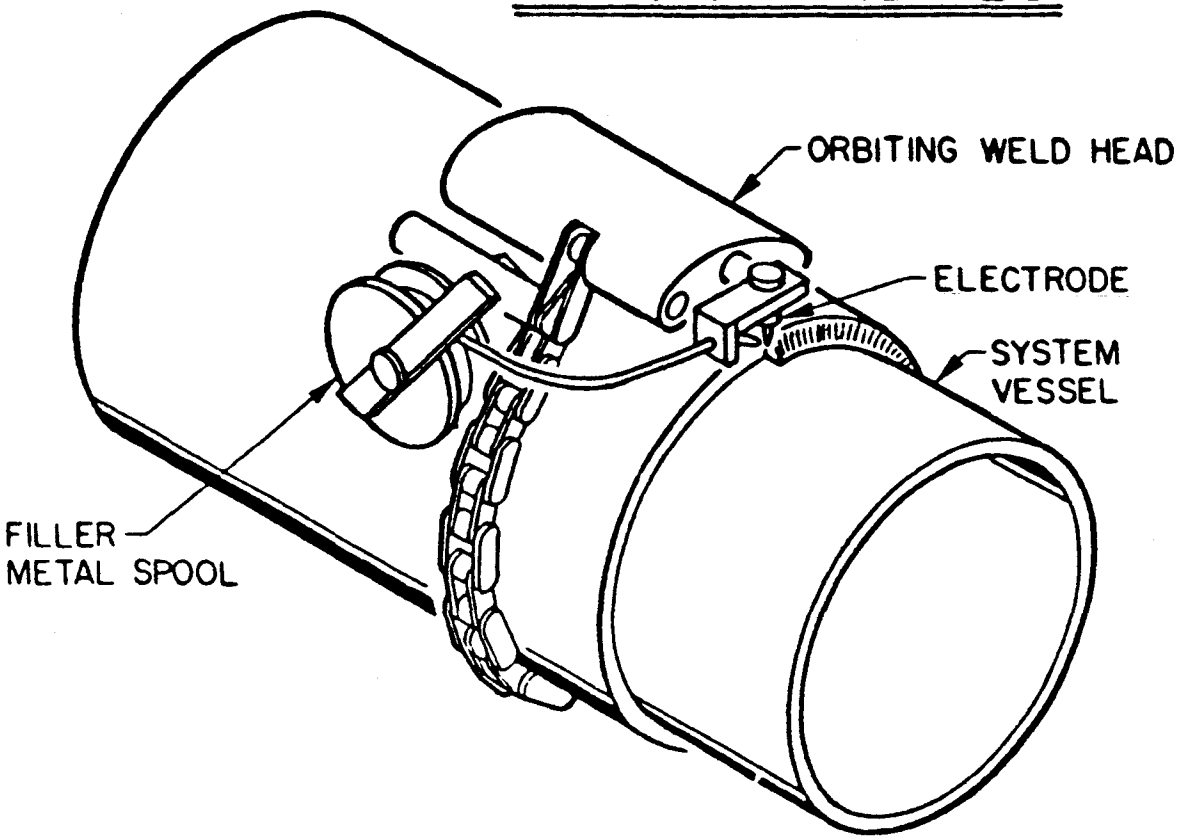

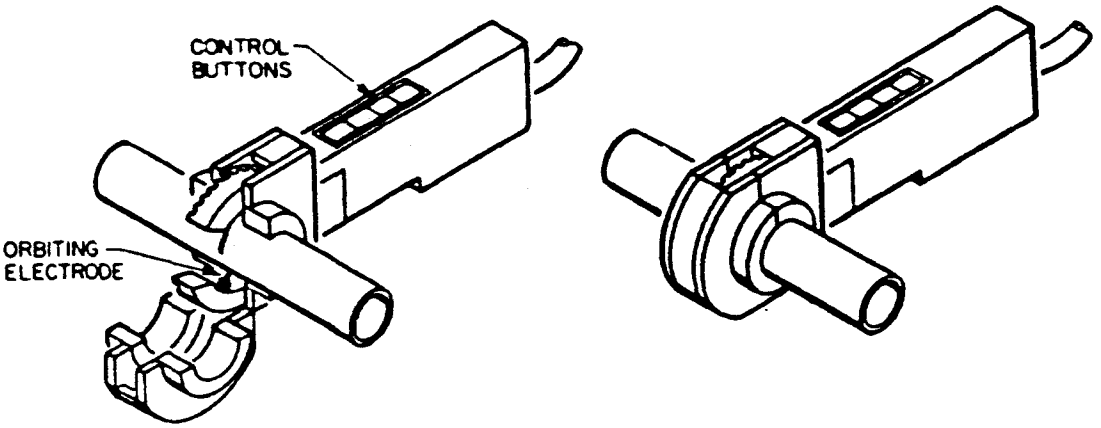

OPENED
TO INSTALL AND REMOVE

CLOSED
DURING WELDING

WELDING UNIT FOR HELIUM RETURN AND SHIELD PIPES

Figure 8.2

Interconnection Welding Units

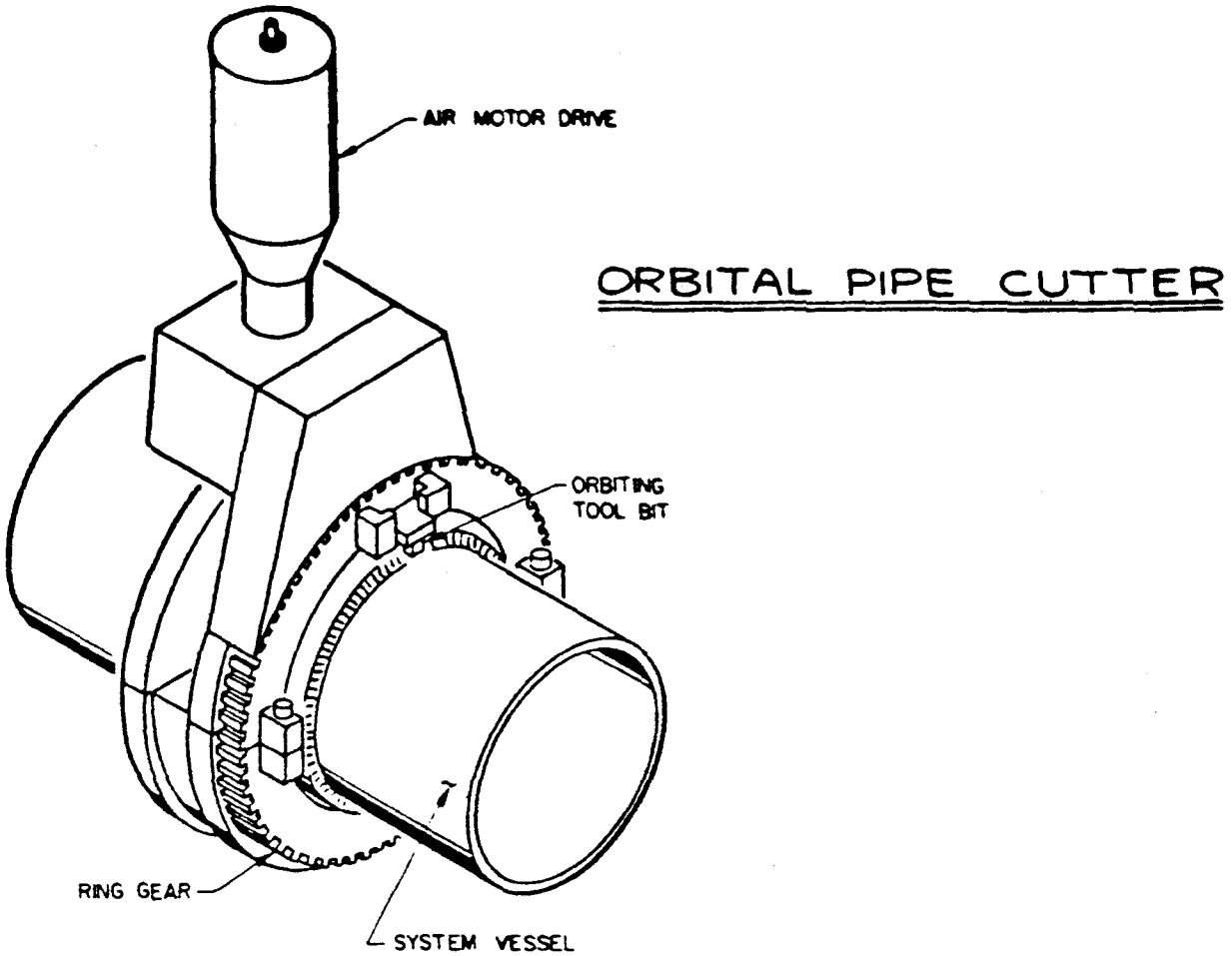

Figure 8.3
Interconnection Pipe Cutter

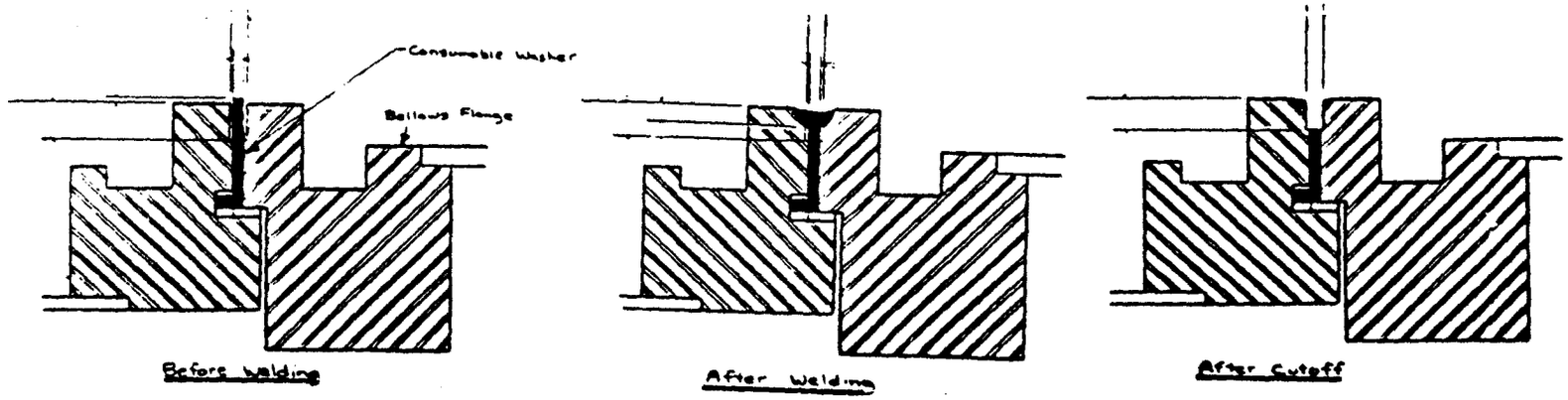

Figure 8.4
Beam Tube Junction

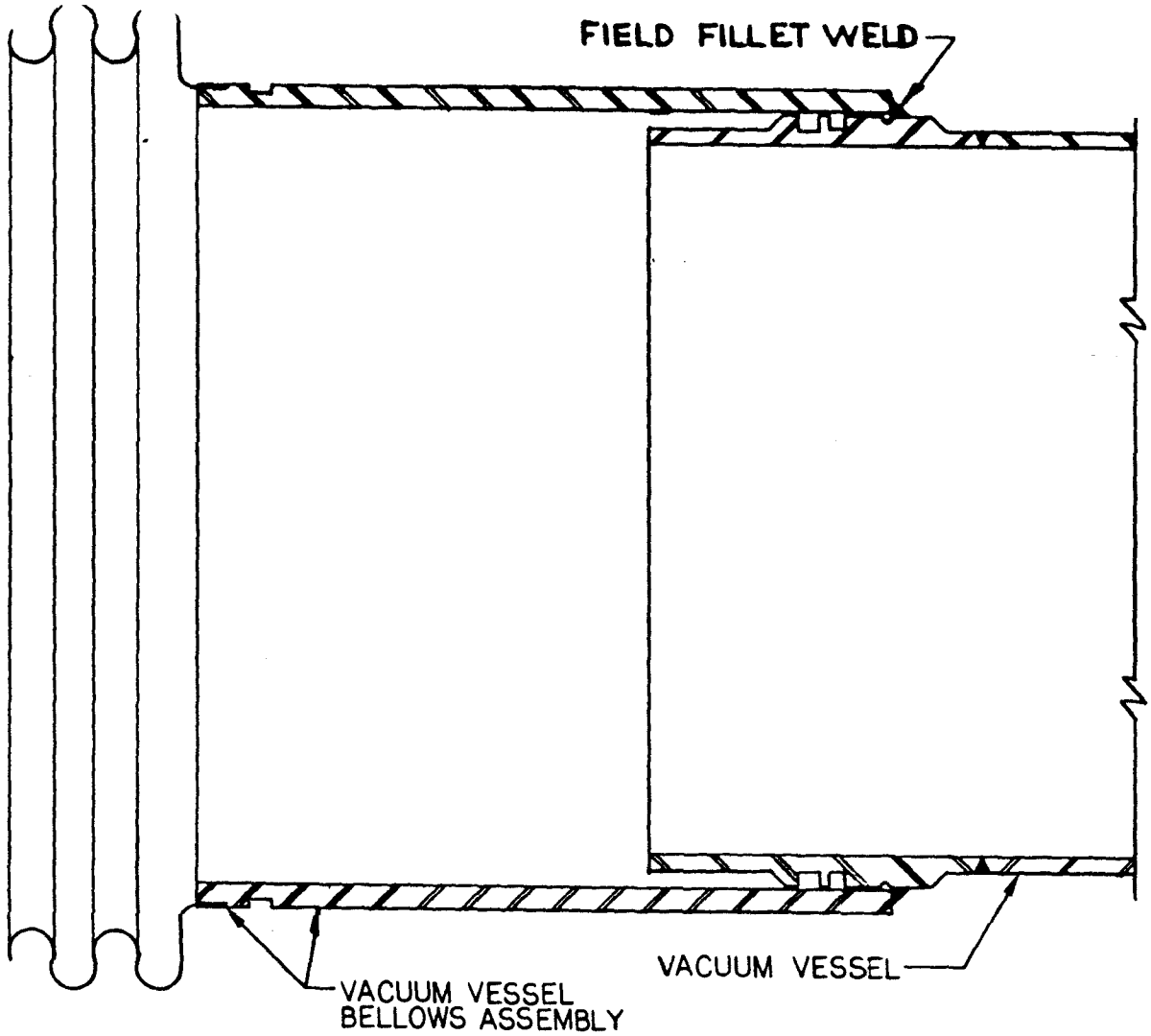

Figure 8.5
Cold Mass Connection

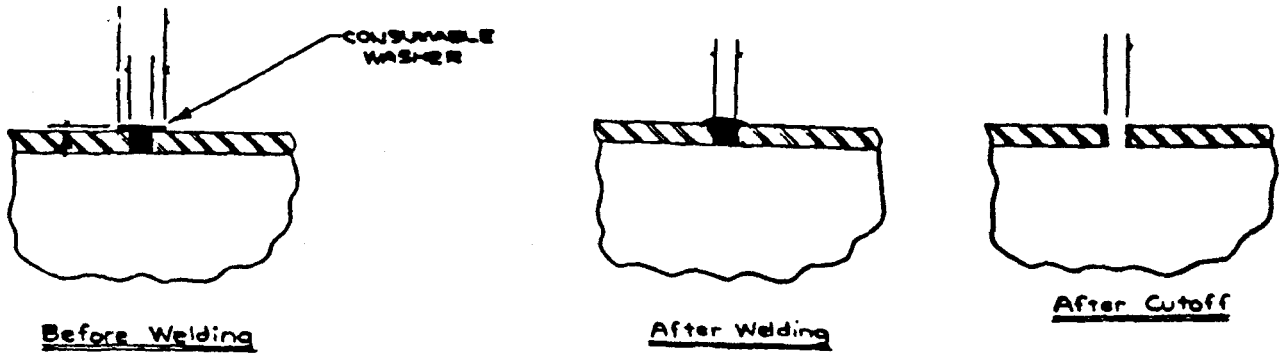

Figure 8.6
Piping Junction

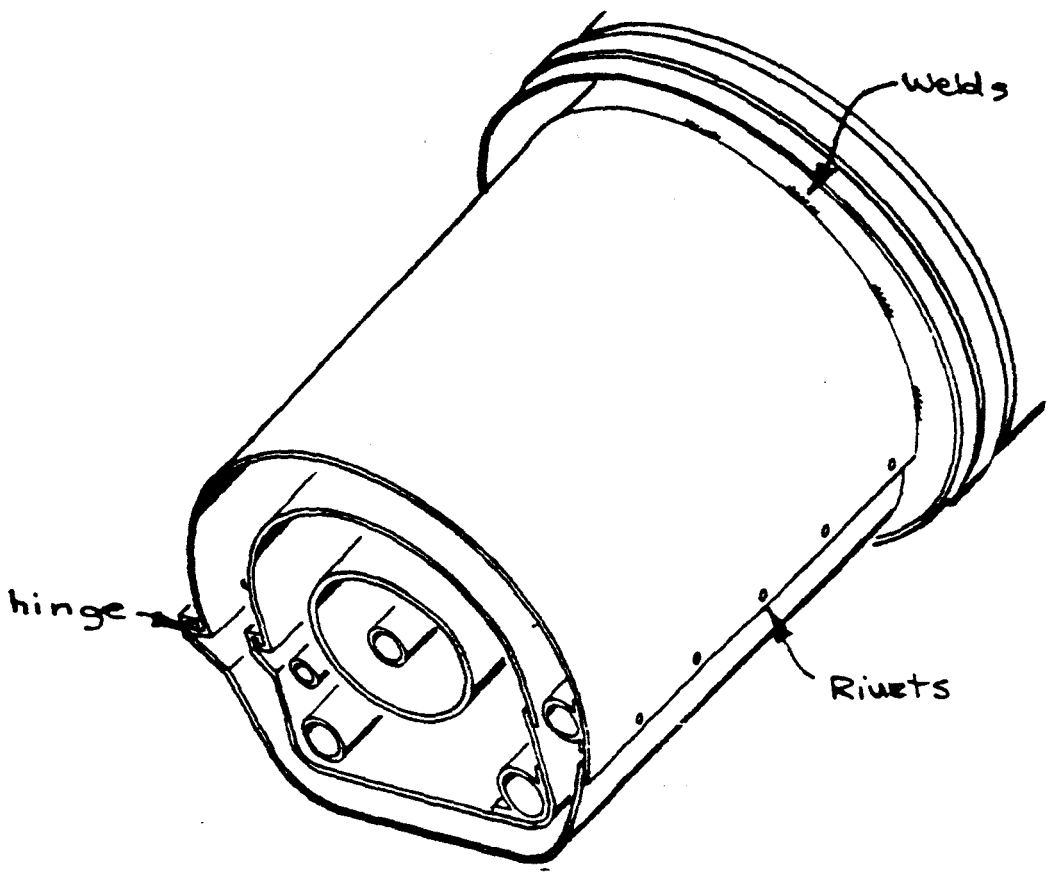

Figure 8.7

Shield Junction

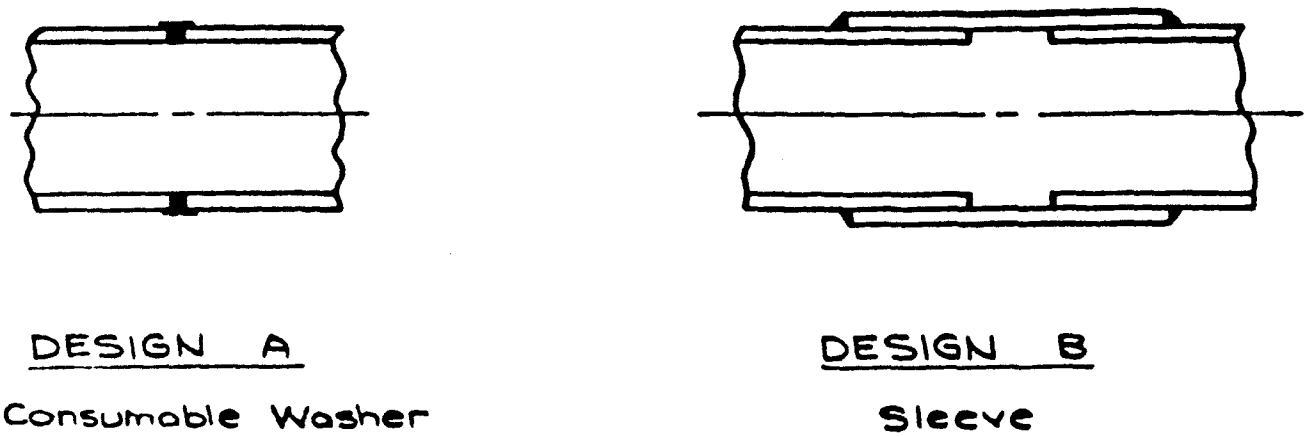

HELIUM RETURN AND SHIELD PIPE CONNECTION

Figure 8.8
Helium Return and Shield Pipe Connection

9. Costs

An evaluation of the proposed design changes as they would impact on the original dipole cost estimate; i.e., the Cost Design, has been completed. A breakdown comparing the design features of the Cost Design and Design B, together with their relative costs are presented.

The method of cost evaluation is the same as employed per the Cost Design. The following criteria were used:

- Costs based on quantities of 8000 dipole magnets.
- Costs based on standard manufacturing methods.
- Costs based on proper tooling expenditures for maximum part economies.
- Costs based on final part design refinement.
- Costs based on CDG specified salary scales.
- Costs based on assembly methods developed by Fermilab.
- Costs based primarily on vendor quotes for similar components developed for the Tevatron, FNAL Dipole Design, and 1986 SSC Design A drawings. Actual costs are expressed in 1986 dollars.
- Cold mass furnished corresponds to BNL design with planned improvements.

The experience gained during the fabrication of Design A Long Magnet Models has provided a valuable reference guide for cost evaluation purposes.

The comparative design and cost features of a precision cold mass skin versus the Design A skin is treated separately

COLD MASS CONNECTION SLIDE SUBASSEMBLY COMPARISON

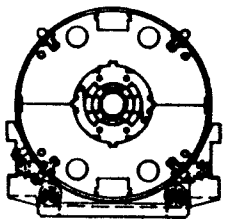

DESIGN A

ITEM	Mat'l Total K$	Labor Total K$
Slide cradle assembly, c/o		
Slide post hold down		
Slides		
Cradles		
Shafts		
Tie bars		
Lugs		
Pins		
Plates		
Targets		
Nuts, washers, screws		
COST DESIGN, TOTAL COST/MAGNET	2.5	.055

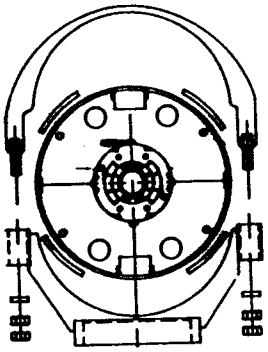

DESIGN B

ITEM	Mat'l Total K$	Labor Total K$
Slide connection assembly, c/o		
Upper arm supports		
Bearing blocks		
Tie rods		
Lower cradle assembly		
DU bearing		
Split collar		
Studs		
Nuts, washers, screws		
DESIGN B, TOTAL COST/MAGNET	2.5	.055

SUPPORT POST COMPARISON

DESIGN A

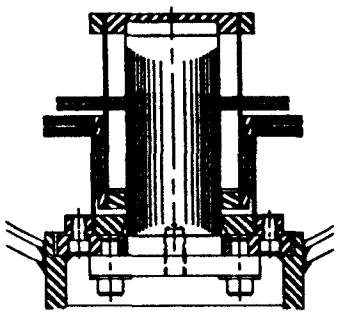

ITEM	Mat'l Total K$	Labor Total K$
Post assembly/consists of:		
5" Tube	.08	
7" Tube	.11	
5" Clamp & disk	.17	
20K Shield intercept	.05	
Middle tube assembly	.5	
Lower clamp & disk	.14	
80K Shield intercept	.09	
Lower clamp ring	.11	
Insulation rings & bars	.13	
80K Insulation ring	.17	
Insulation, disks & wraps	.02	
80K Retaining ring	.18	
Shipping pin weldments	.25	
Shipping pins	.25	
Shipping flanges	.25	
COST DESIGN, TOTAL COST/MAGNET	2.5	.19

DESIGN B

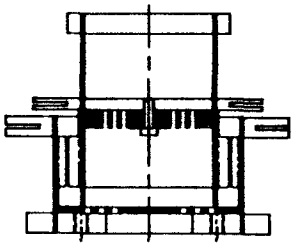

ITEM	Mat'l Total K$	Labor Total K$
Post assembly/consists of:		
5" Tube	.10	
7" Tube	.11	
5" Clamp & Disk	.17	
20K Shield intercept	.05	
Middle tube assembly	.50	
Lower clamp & disk	.14	
80K Shield intercept	.09	
Lower clamp ring	.11	
Insulation ring	.08	
80K Insulation ring	.17	
Insulation disk & wraps	.02	
80K Retaining ring	.18	
DESIGN B, TOTAL COST/MAGNET	1.7	.19

ANCHOR COMPARISON

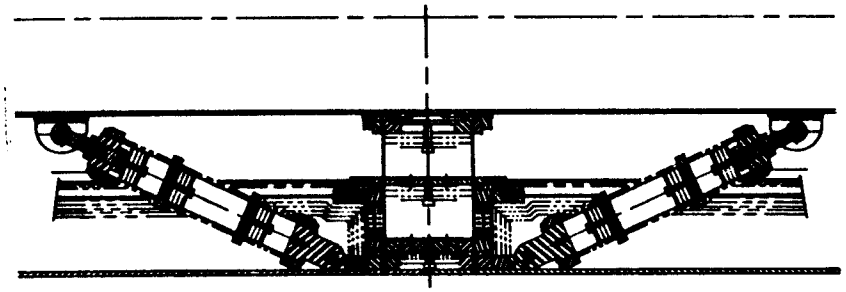

DESIGN A

ITEM	Mat'l Total K$	Labor Total K$
Mounts	.024	
Shrink rings	.03	
Inner disks	.003	
Insulation	.01	
Tubes	.03	
Outer rings	.02	
End fittings	.052	
COST DESIGN,TOTAL COST/MAGNET	.163	.022

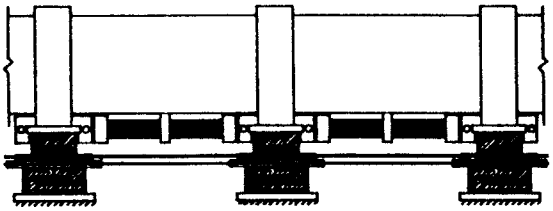

DESIGN B

ITEM	Mat'l Total K$	Labor Total K$
Mounts	.10	
Shrink rings	.12	
Tubes	.16	
Insulation	.03	
Studs	.01	
Brackets	.05	
Pins	.01	
Saddles	.05	
DESIGN B, TOTAL COST/MAGNET	.53	.088

THERMAL SHIELDS COMPARISON (20K)

DESIGN A (1/8 thick aluminum)

ITEM	Mat'l Total K$	Labor Total K$
20K Bottom, right	.06	
Bottom, side	.09	
Bottom, left	.19	
Top	.21	
Extrusion	.04	
Transitions	.19	
Lugs	.04	
Calbe assembly	.008	
COST DESIGN, TOTAL COST/MAGNET	.828	.11

DESIGN B (.062 thick aluminum)

ITEM	Mat'l Total K$	Labor Total K$
Bottom	.20	
Top	.15	
Extrusion	.04	
Transitions	.19	
Lugs	.04	
Cable	.008	
DESIGN B, TOTAL COST/MAGNET	.628	.10

THERMAL SHIELDS COMPARISON (80K)

DESIGN A (1/8 thick aluminum)

ITEM	Mat'l Total K$	Labor Total K$
20K Bottom, left	.18	
Bottom, right	.18	
Top	.30	
Extrusion	.034	
Transitions	.34	
Lugs	.084	
Cable	.015	
COST DESIGN, TOTAL COST/MAGNET	1.13	.165

DESIGN B (.062 thick aluminum)

ITEM	Mat'l Total K$	Labor Total K$
Bottom	.22	
Top	.24	
Extrusion	.034	
Transitions	.34	
Lugs	.084	
Cable	.015	
DESIGN B, TOTAL COST/MAGNET	.933	.15

INSULATION COMPARISON

The Design B Magnet has one blanket of insulation around the cold mass subassembly. The Design A Magnet did not have this feature.

The new insulation material will be identical in cost with the Design A material when assembled into blankets. A comparison is listed for evaluation.

DESIGN A

ITEM	Mat'l Total K$	Labor Total K$
20K Shield blanket	.215	
80K Shield blanket #1	.251	
#2	.260	
#3	.266	
#4	.272	
COST DESIGN,TOTAL COST/MAGNET	1.264	

DESIGN B

ITEM	Mat'l Total K$	Labor Total K$
Cold mass blanket	.18	
20K Shield blanket	.22	
80K Shield blanket #1	.256	
#2	.265	
#3	.270	
#4	.277	
DESIGN B,TOTAL COST/MAGNET	1.468	

COLD MASS SUBASSEMBLY COMPARISON

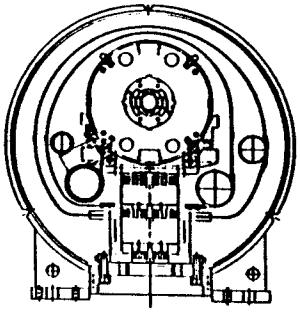

DESIGN A

ITEM	Mat'l Total K$	Labor Total K$
Helium pipes	.48	.11
Pipe supports	.042	
Pipe sleeves	.02	
Pipe insulators	.016	
Pipe straps	.008	
Mount slide assemblies		.055
Mount pipe supports		.044
Install pipes		.022
Install supports		.044
Install anchors		.044
COST DESIGN, TOTAL COST/MAGNET	.566	.319

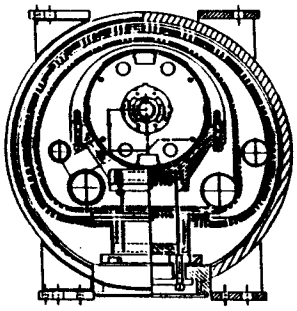

DESIGN B

ITEM	Mat'l Total K$	Labor Total K$
Helium pipes	.48	.11
Pipe supports	.063	
Pipe sleeves	.03	
Pipe insulators	.02	
Pipe straps	.01	
Mount slide assemblies		.05
Mount pipe supports		.066
Install pipes		.022
Install supports		.044
Install anchors		.088
Install insulation		.088
DESIGN B, TOTAL COST/MAGNET	.603	.468

VACUUM VESSEL COMPARISON

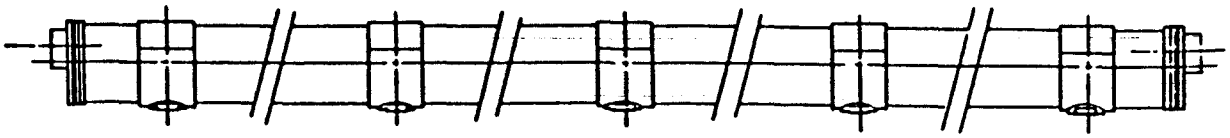

DESIGN A

ITEM	Mat'l Total K$	Labor Total K$
Anchor foot	.15	
Slotted feet	.60	
Vacuum vessel	1.8	
Post tray assembly	.05	.099
End rings	.30	.088
Assembly labor		.704
COST DESIGN, TOTAL COST/MAGNET	2.90	.891

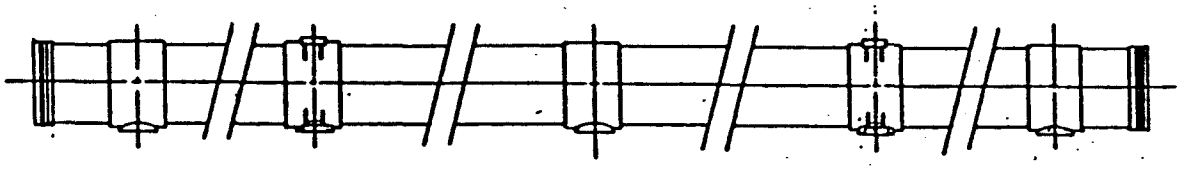

DESIGN B

ITEM	Mat'l Total K$	Labor Total K$
Support rings	.5	
Support & mounting rings	.7	
Vacuum vessel tubes	.6	
Post tray assembly	.05	.099
End rings	.20	.088
Assembly labor		.75
DESIGN B, TOTAL COST/MAGNET	2.05	.937

FINAL ASSEMBLY COMPARISON

DESIGN A

ITEM	Mat'l Total K$	Labor Total K$
Install L.H. 20K shield		
Install R.H. 20K shield		
Install heat sinks		
Weld lower shield		
Install upper shield		
Insulate		
Install R.H. 80K shield		
Install L.H. 80K shield		
Install upper shield		
Insulate		
Insulate supports		
Install heat sinks		
Heat shield anchor		
Weld 80K shield		
Prepare for Insertion		1.5
Complete after insertion		0.312
COST DESIGN,TOTAL COST/MAGNET		1.812

DESIGN B

ITEM	Mat'l Total K$	Labor Total K$
Install heat sinks		
Weld upper & lower 20K shield		
Insulate		
Install heat sinks		
Weld upper & lower 80K shield		
Insulate		
Insulate supports		
Prepare for Insertion		1.3
Complete after insertion		0.32
DESIGN B, TOTAL COST/MAGNET		1.62

INTERCONNECTION COMPARISON

The number of parts and assembly procedures are the same for both magnet designs. Material and labor estimates are listed below:

DESIGN A and B

ITEM	Mat'l Total K$	Labor Total K$
Beam tube bellows assembly	.254	
Weld washer	.002	
1 Ø bellow assembly	.341	
Weld Filler & splice solder		
He bellows assembly	.076	
Weld washer	.002	
He bellow assembly	.050	
Weld washer	.002	
20K bellow assembly	.092	
Weld washer	.002	
80K bellow assembly	.071	
Weld washer	.002	
20K shield	.032	
80K shield	.040	
20K MLI	.015	
80K MLI	.060	
MLI tape	.001	
Vacuum bellows assemby	.565	
Rivets	.002	
Beam tube bellows		.048
Splicing		.037
1 Ø bellows		.031
He pipes		.040
20K system		.037
80K system		.042
Vacuum system		.050
Preconnect		.031
Prepare end		.046
TOTAL COST	1.62	.362

FINAL DIPOLE COST COMPARISON

	DESIGN A			DESIGN B		
Description	Material K$	Labor K$	Total K$	Material K$	Labor K$	Total K$
Cold Mass Slide Subassembly	2.5	.055	2.555	2.5	.055	2.555
Support Post	2.5	.19	2.69	1.7	.19	1.89
Anchor	.163	.022	.185	.53	.088	.618
Thermal Shields	1.985	.275	2.233	1.561	.25	1.811
Insulation	1.264	-	1.264	1.468	-	1.468
Cold Mass Subassembly	.566	.319	.885	.603	.468	1.071
Vacuum Vessel Assembly	2.9	.891	3.791	2.05	.937	2.987
Final Assembly	-	1.812	1.812	-	1.62	1.62
Interconnect.	1.62	.362	1.982	1.62	.362	1.982
GRAND TOTAL	13.471	3.926	17.397	12.032	3.970	16.002

FY 1988 Cost Development

FY 1988 will include the reevaluation and documentation of design features and cost estimates. The following areas will be evaluated.

- Cold Mass Outer Shell
  - Material costs and delivery
  - Material rolling costs
  - Alignment methods
- Cold Mass Connection-Slide
  - Material costs
  - Assembly and alignment methods
- Suspension System
  - Material costs
  - Assembly and alignment methods
- Thermal Shields
  - Material costs
  - Fabrication methods
- Insulation
  - Material costs
  - Fabrication and storage methods
- Vacuum Vessel and Final Assembly
  - Material costs
  - Assembly procedures
- Interconnection
  - Material costs
  - Tooling, inspection, and testing

Cold Mass Skin Cost Comparison

Engineering analysis since the initial 1986 Cost Design effort found major design faults with the Cost Design Support Post Slide Subassembly. It did not meet the load criteria that had been specified, and the slide did not lend itself to mass produced part economies.

Engineering studies and preliminary tests indicate that the Design B connection-slides used in conjuction with a precise, smooth skin do meet the criteria.

Precision thickness skin material has been procured and formed into skins for two magnets.

The method of welding, use of BNL style tooling and fiducial systems, together with BNL production methods and costs developed for Design A do not change for this analysis.

The estimated cost increase in the cold mass skin is due to a $.40 per lb. increase in material cost. This will increase the cold mass costs by $.4K each.

Dipole assembly estimates for slides and new support post assemblies indicate that there will be an $.8K per magnet saving using the new design. This is the result of the use of fewer pieces and the elimination of assembly operations. This combined with the precision skin cost increase of $.4K results in a net $.4K cost reduction.

The relative costs are itemized in the support post and final assembly data sheets.

10. Conclusions

- The Design B SSC dipole magnet cryostat is a logical extension of the successful Design A cryostat. As such, Design B development incorporated Design A experiences in the areas of analysis, design, material properties, component fabrication and assembly, transient and steady state performance and construction costs. The design effort was and continues to be heavily augmented by laboratory evaluations of components and assemblies. Components included are the cold mass connection-slide, support post, anchor, insulation, shields and interconnections. The cryostat has been evaluated as an assembly in the areas of handling and installation, thermal performance and magnetic performance.

- The design satisfies most of the needs of the SSC Collider Magnet System Requirements. Areas that require continuing resolution include allowable stresses, radiation resistance, dynamic response, reliability and alignment.

- The design is appropriate for the FY88 Design B Long Magnet Model Program and for the Technology Transfer phase of the SSC Magnet Industrialization Program.

- Production quantity costs for the Design B cryostat and magnet assembly ($15,079/magnet) compare favorably with that for earlier designs ($16,110/magnet). This relation is augmented by uncosted advantages of the design, several of which are listed below:

  - Enhanced buildability
  - Increased tolerances to construction errors
  - Improved transient and steady state thermal performance
  - Improved structural response to transient loads
  - Improved installation features

- A continuing and timely development effort is required in support of the Design B cryostat program and its final iteration to Design C, the mass production design. Of particular importance are evaluations that consider the response of the entire cryostat assembly to non steady state conditions. The evaluations will consist of analysis confirmed by measurement. Such evaluations include the following:

  - Handling and installation
  - Transportation and seismic loading
  - Vacuum vessel pumpdown
  - Cooldown and warmup
  - Quench
  - Operation in strings
  - Life testing