M. Zisman
Project Manager

FY2009 R&D Plan
Neutrino Factory and Muon Collider Collaboration

March 5, 2009

Co-Spokespersons: Alan Bross, FNAL
(630)840-4880
bross@fnal.gov

Harold Kirk, BNL
(631)344-3780
hkirk@bnl.gov

Project Manager: Michael Zisman, LBNL
(510)486-5765
mszisman@lbl.gov

DOE Program Manager Bill Weng
(301)903-3624
bill.weng@science.doe.gov

Summary

A Neutrino Factory or a Muon Collider represents a potential future direction for the U.S. high-energy physics community. These challenging machines make use of stored beams of muons—a particle that is difficult to produce and has a short lifetime of only 2.2 μs at rest. The U.S. Neutrino Factory and Muon Collider Collaboration (NFMCC), comprising some 130 scientists from national laboratories, universities, and SBIR companies, has been carrying out a focused R&D program aimed at:

- producing conceptual designs for such facilities,
- developing and testing the required machine components, and
- carrying out system tests of a few key subsystems of such facilities.

In this document we summarize the R&D progress made during FY2008 and indicate the plans and milestones for FY2009. Because our University groups (IIT, Princeton, UC-Berkeley, UCLA, UC-Riverside, and U-Mississippi) all turn in detailed annual progress reports and summaries, and our SBIR partners (Muons, Inc., PBL, and Tech-X) write proposals that are reviewed by DOE, this document will cover only the status of the national laboratory programs (including the "sponsoring laboratories, BNL, FNAL, and LBNL, and the other laboratories with whom we collaborate, ANL, Jlab, and ORNL).

The NFMCC budget request for FY2009 (based on the limitations from the present Continuing Resolution) is $3,775K, of which "core funds" of $2,200K are requested to be distributed to the sponsoring laboratories as follows:

- BNL: $1,250K
- FNAL: $625K
- LBNL: $325K

The remaining $1575K will be distributed as indicated in Table 1.

The organization of the NFMCC is indicated in Fig. 1. The collaboration is managed by elected Co-spokespersons and a Project Manager appointed by the Muon Collaboration Oversight Group (MCOG) and approved by, and reporting to, DOE (and occasionally NSF). Each year, after getting budgetary guidance from DOE, the Technical Board meets to craft a program for the year. With these priorities, the Project Manager prepares a budget that is approved first by the Technical Board, then by the Executive Board, and finally by the Co-spokespersons. Before submitting the budget to DOE, the Project Manager and institutional representatives prepare a set of agreed-on milestones outlining what the collaborating groups will accomplish that year. Table 1 summarizes the results of this process for FY2009, and Attachment A lists the milestones for this year.

In what follows we present the summary of FY2008 activities, plans for FY2009, and a list of recent NFMCC publications.

Table 1. First installment budget request for NFMCC funds. There are $10K of uncommitted funds that are not being requested at this time; these are tentatively earmarked for UCLA to support the recruitment of a post-doctoral candidate. If the post-doctoral candidate accepts our offer, the reserve funding, possibly along with $5K of funding presently earmarked for LBNL, will be committed instead to UCLA.

	Total ($K)	BNL	FNAL	LBNL	ANL	ORNL	Jlab	Princeton	UCB	UCLA	U-Miss	IIT	UC-R
Cooling	**125**												
MTA operation	50		50										
201- and 805-MHz cavity R&D	5						5						
Engineering	50			50									
Coupling coil preparations	20		20										
MTA beam line	0												
LiH absorber test	0												
Instrumentation	0												
Targetry	**160**												
MERIT	45	25						20					
MERIT decommissioning	40	20				20							
Facility design	25					25							
Targetry simulations	50	50											
Diagnostics	**190**												
Norem	190				190								
Hardware	0												
Beam Simulations	**237**												
Cooling/Theory	237	100								55		82	
Acceleration	**22**												
RLA/FFAG/Synchrotron studies	22						10				12		
Collider	**123**												
SRF R&D	25						25						
Longitudinal cooling	98								3				95
MICE	**708**												
Common fund	75			75									
Absorber windows	18										18		
RF cavities	490			490									
Spectrometer solenoids	25			25									
Coupling coils	100			100									
Total Expended ($K)	**1565**	195	70	740	190	45	40	20	3	55	30	82	95
Operating ($K)	950	195	70	125	190	45	40	20	3	55	30	82	95
Equipment ($K)	615			615									
GPP ($K)	0												
Previously Allocated Funds ($K)	**0**												
Remaining Planned Expenditures ($K)	**0**												
Management Reserve [1]	**10**												
TOTAL BUDGET ($K)	**1575**												

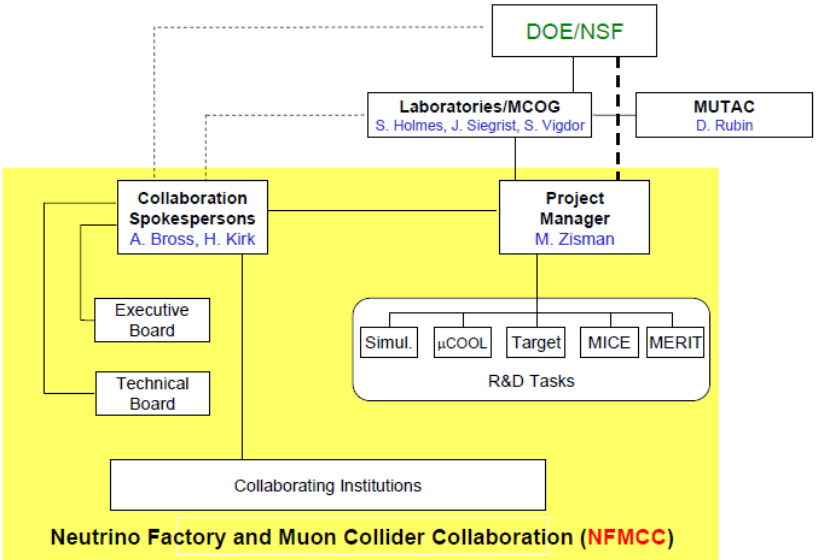

Fig. 1. NFMCC organizational chart.

1. FY2008 Progress and Accomplishments

Brookhaven National Laboratory

BNL provides a Co-Spokesperson for the NFMCC (Kirk), who also serves as a member of the Muon Collider Coordinating Committee (MCCC).[1] We also play a leadership role in the International Design Study of a Neutrino Factory (IDS-NF), providing the U.S. convener of the Accelerator Working Group (Scott Berg), and we provided the project manager for the successful Mercury Intense Target (MERIT) experiment at CERN.

A list of recent BNL papers is given in Section 3.

Muon Accelerator Design

In FY2008, a primary focus of our activity was aimed at design of a Muon Collider (see Fig. 2). We participated with colleagues at FNAL and LBNL, coordinated by the MCCC, to develop a 5-year R&D plan aimed at delivering a Design Feasibility Study (DFS) for a Muon Collider and a Reference Design Report (RDR) for a Neutrino Factory. The RDR activity is being carried out under the auspices of the IDS-NF.

For the Muon Collider, we carried out several key tasks:

- developed a complete scheme for simulating Muon Collider 6D performance
- developed a model for RF cavity breakdown in a magnetic field and wrote a simulation code to follow emitted electrons in a cavity
- proposed an RF cavity concept based on magnetic insulation to eliminate the breakdown problem
- began study of "bucked" lattice configurations that minimize the magnetic field at the RF cavity locations as an approach to managing cavity breakdown

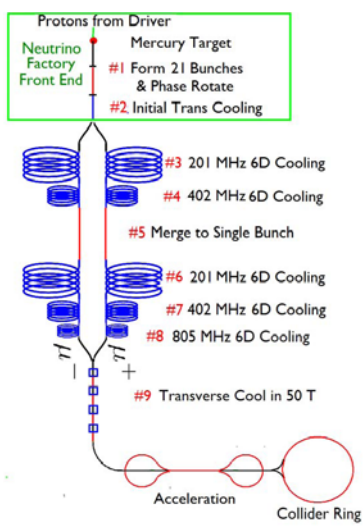

Fig. 2. Schematic layout of Muon Collider components.

[1] The MCCC comprises the leadership of the NFMCC (Bross, Kirk, and Zisman) and that of the FNAL Muon Collider Task Force (Geer and Shiltsev), and serves to coordinate the R&D program across the two groups.

MERIT

Of relevance to both a Muon Collider and a Neutrino Factory, we successfully completed data-taking for the Mercury Intense Target (MERIT) experiment (see Fig. 3) at CERN. This work was carried out as an international collaboration including members from RAL, CERN, ORNL, and Princeton University. Data analysis is under way, and initial results have already been disseminated. Initial work on decommissioning and removal of the experiment began later in the year, aided by colleagues at ORNL and Princeton. This activity must necessarily extend until the induced radioactivity of the experimental equipment has reached safe levels.

EMMA

We are continuing our work to prepare for the EMMA experiment at Daresbury Laboratory in the UK. This experiment will test an electron model of a non-scaling Fixed-Field Alternating Gradient (FFAG) ring—a concept first proposed by NFMCC members. We have been involved in lattice design, injection and extraction considerations, and commissioning planning. If successful, EMMA will pave the way for the use of such rings for either a Neutrino Factory or a Muon Collider, and it will also open the possibility of using such devices for other purposes, e.g., a medical accelerator.

Fermi National Accelerator Laboratory

FNAL provides a Co-Spokesperson for the NFMCC (Bross), who also serves as a member of the MCCC. Bross also leads the MuCool R&D program, which is centered at FNAL. FNAL is host to the MuCool component testing effort, which is housed in a dedicated area, the MuCool Test Area (MTA, see Fig. 4). The MTA houses the NFMCC's 805- and 201-MHz RF cavities, along with a 5-T solenoid used for testing them.

A list of recent FNAL papers is given in Section 3.

Fig. 3. MERIT experiment being installed in CERN TT2A tunnel.

Fig. 4. The MTA at FNAL.

MuCool

In the MuCool program we have completed button tests with our 805 MHz cavity and the cavity is now being refurbished. Results on breakdown properties of different materials have been compiled. Although the data do show a good deal of scatter, they do indicate that harder materials, such as Mo, perform better, as do materials with TiN coating. These tests took place in the MTA at FNAL. We have also completed the first round of tests in the MTA with our 201-MHz MICE prototype cavity in a magnetic field. Although this cavity conditioned up to 21 MV/m with no magnetic field, at a relatively low superimposed field of 0.4 T the cavity did break down at gradients above 10–12 MV/m. Commissioning of the MTA cryogenics plant began in FY2008. When ready, this will be used to cool the “Lab G” solenoid that is already in use.

Discussions with Y12 regarding the fabrication of LiH disks for thermal and radiation tests, and for use as an absorber in MICE Step 3.1, continued. The design has been finalized, all required test fixturing has been fabricated for the thermal tests to be done at FNAL, the test program has been defined, and the fixturing for the MICE LiH absorber has been designed.

MICE

The beam profile monitors were installed and commissioned in the MICE beam line (see Fig. 5). We also completed construction of the readout system for the second fiber tracker for MICE. Testing on this system continues. Preparations for performing the magnetic field mapping of the two MICE Spectrometer Solenoids continued. Modifications to the ZipTrack mapping system were completed and the infrastructure modifications to the area where the magnets will be mapped have been done. We have made numerous trips to RAL to deliver and initially commission our tracker readout systems, and we provided a person (Bross) to serve a one-month shift as MICE Operations Manager (MOM).

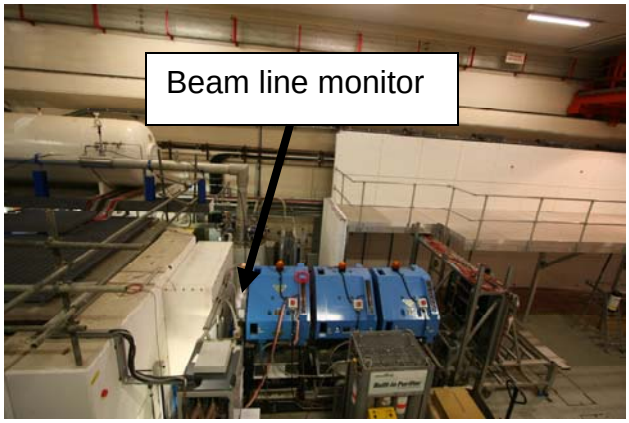

Fig. 5. Fermilab beam line monitor installed in MICE Hall.

Simulation Effort

We initiated a number of studies for the front end of a Neutrino Factory or Muon Collider. These studies verified our initial approach and suggested some interesting variations. The approach forms the baseline design for the front end of the IDS-NF Neutrino Factory. We also explored some of the variations in cooling options in the front end. It was demonstrated that hydrogen absorbers should be more effective than the LiH absorbers and that quadrupole magnet focusing could be used. This last approach may become much more attractive if solenoidal fields preclude high-gradient RF operation.

Lawrence Berkeley National Laboratory

LBNL provides an Associate Spokesperson (Sessler) for the NFMCC and also provides the NFMCC Project Manager (Zisman). Zisman is also a member of the MCCC and serves as Deputy Spokesperson for the MICE experiment. We provide the RF physicist (Li) for the MuCool program. We also participate in many muon-related community activities. Zisman is a member of the IDS-NF Steering Group and served as a member of the NuFact08 Scientific Program Committee. Li has served as U.S. convener for Working Group 3 of NuFact for the past two years, a role that will continue through 2009.

We also fill key technical roles in the MICE experiment. Zisman serves as Deputy Spokesperson and WBS Level 2 manager for the cooling channel components, and Li is Level 3 manager for the RFCC module. Virostek has played a key role in helping the MICE Project Manager at RAL develop the Phase 2 cost and schedule profile for the experiment.

A list of recent LBNL papers is given in Section 3.

MuCool

LBNL has continued its involvement in program planning and coordination on the MTA RF test programs, including the 805-MHz button cavity tests, the 201-MHz cavity tests, and the studies of external magnetic effects on RF gradients. Most of the components being tested at the MTA were designed and built by LBNL (the 201-MHz cavity in collaboration with Jlab). These include the 5-T, dual coil, “Lab G” solenoid, the 805-MHz pillbox cavity used for the “button” tests, the curved Be windows developed for the

805-MHz RF testing program, and the 201-MHz MICE prototype cavity with its larger Be windows. Figure 6 shows the 201-MHz cavity placed next to the 5-T solenoid in the MTA.

Working with colleagues at FNAL, ANL, Jlab, and IIT, we have confirmed the degradation in maximum gradient achievable when the cavity is placed in a strong axial magnetic field. Having tested the 805-MHz cavity (in both its thin-window and button configurations) for over five years, we recently decided to temporarily stop the tests. Severe cavity surface damage was observed at high electric field, especially in the RF coupling slot region. The surface damage (we believe) was mainly caused by a combination of the high electric field and the external magnetic field. The 805-MHz cavity has been completely refurbished at Jlab to remove and resurface the damaged areas and round the sharp corners of the RF coupling slot. The cavity is being cleaned now and should be ready for tests during FY2009.

High power tests of the 201-MHz cavity have been continued during FY2008 although frequently interrupted by lack of an available RF power source at the MTA. In the absence of a magnetic field, the cavity reached a gradient of 21 MV/m. During conditioning and operation, the cavity was mechanically stable with the thin beryllium windows. Small frequency shifts (due to RF heating on the thin windows) were observed, however, as predicted. These frequency shifts are well within the RF tuner's range (for the MICE cavity). In order to study the external magnetic field's influence, the cavity was moved close to the Lab G magnet. The cavity was able to maintain its RF gradient with fringe magnetic fields of about 300 gauss. It reached 12 MV/m with the highest available stray magnetic field, 0.75 T, at the nearest beryllium window. This result is encouraging from the MICE perspective, but is still a big issue for a Neutrino Factory cooling channel. We have begun an informal collaboration with colleagues at SLAC to carry out simulations of breakdown behavior, using tools already developed to study multipactoring phenomena.

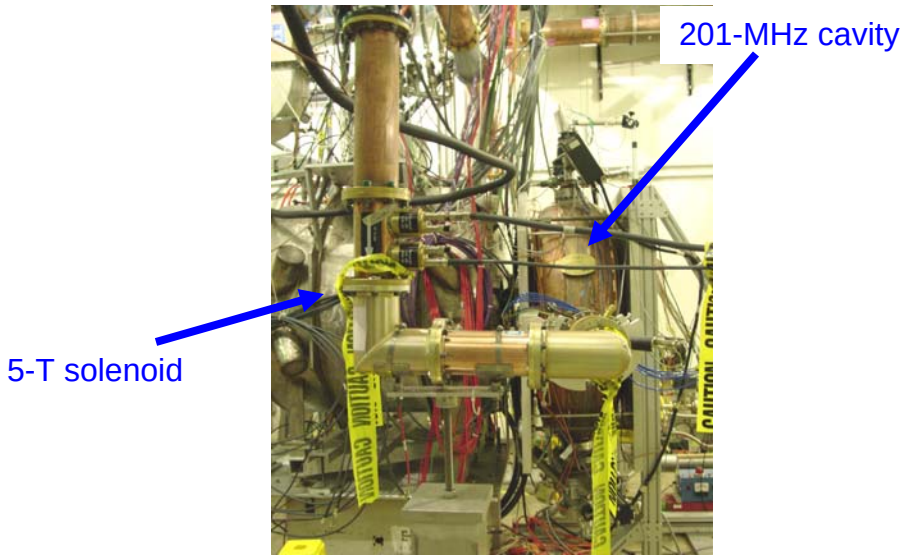

Fig. 6. 201-MHz cavity and 5-T solenoid in the MTA.

To study the external magnetic field effects for a realistic muon ionization cooling channel, a superconducting Coupling Coil is required. We are collaborating with colleagues at the Institute of Cryogenics and Superconductivity Technology (ICST) at the Harbin Institute of Technology (HIT) in China to design and fabricate a large diameter Coupling Coil, identical to those to be used in MICE (see below), for testing the 201-MHz RF cavity under field conditions similar to those that will exist in the MICE cooling channel. We have monitored the design itself and we are providing much of the material (e.g., superconducting cable) that goes into fabrication of the coil. One unfortunate discovery was the unavoidable need to pay substantial duties on the raw materials, such as superconductor and multi-layer insulation, shipped into China to fabricate the coils.

Preliminary data analysis and numerical simulations indicate that the RF gradient degradation observed at the MTA due to the external magnetic fields most likely results from having parallel electric and external magnetic fields. Therefore, as suggested by Bob Palmer, a cavity that has its geometry following the external magnetic field lines (a magnetic field insulated cavity) may have a chance to overcome the observed accelerating gradient limitation. We intend to participate in the design of such a cavity, with an eye toward fabricating and testing it in future years.

MICE

LBNL is responsible for the procurement of a pair of Spectrometer Solenoid magnets for MICE. In June of 2006, a contract was placed with Wang NMR in Livermore, CA to complete a detailed design of the superconducting, 5-coil solenoids and to fabricate and test the magnets. The design was completed by the end of FY2006 and construction has been under way since then.

During FY2008, the cold masses for both magnets were completed. This included winding of the five coils on the magnet mandrel, banding of the coils to increase strength, installation of instrumentation and the quench protection system, and final assembly and welding of the cold-mass cover plates. The final assembly of the entire first magnet was also completed during FY2008, and initial testing and training of the magnet took place. Unfortunately, several problems with the magnet performance were noted during the testing, and the first magnet could not be accepted by LBNL. During the last few months of FY2008, several design improvements were jointly developed by LBNL and Wang NMR. These included an improved cold-mass cooling circuit, a more robust radiation shield thermal connection, addition of a liquid-nitrogen reservoir to speed up the magnet cooldown, addition of a second vent line to enhance cold mass venting during a quench, support stand modifications to address interface issues, and incorporation of a method to improve the magnet assembly tolerances. Rather than immediately disassembling the first magnet, Wang NMR continued with the assembly of the second magnet (see Fig. 7) with all of the prescribed fixes, so that the “second” magnet will actually be the first delivered unit. By the end of FY2008, the cold mass, radiation shield and vacuum vessel for the second magnet were being prepared for final assembly.

LBNL is also responsible for the detailed design and fabrication of the two RF and Coupling Coil (RFCC) modules for the MICE cooling channel. Prior to FY2008, LBNL

Fig. 7. Second spectrometer solenoid being assembled at Wang NMR.

had been working on the conceptual design of the module and had collaborated with Jefferson Lab to design and fabricate a prototype 201-MHz cavity, which is currently being tested at FNAL as part of the MuCool program. As mentioned above, in December 2006 LBNL began a collaboration with ICST at HIT to develop a design and then fabricate three superconducting Coupling Coils. The first unit will go to FNAL for MuCool experiments, and second and third units will be incorporated in the MICE RFCC modules.

During FY2008, a new mechanical engineer at LBNL was brought into the project in order to complete a detailed design of the RFCC module (see Fig. 8). Since that time, the module design concepts have been completed and assembled in the form of a detailed 3D CAD model. The detailed design of the RF cavities, including the fabrication drawings, has also been completed. Preliminary and final design reviews were held for the RFCC modules with review panels assembled from collaborating institutions. At the completion of the final design review, LBNL was given the authorization to proceed with the fabrication of the RFCC modules. Towards the end of FY2008, LBNL engineers began compiling a package including drawings and specifications in order to initiate a bidding process for the fabrication of the RF cavities. An order was also placed for the procurement of the copper material needed to make up to ten cavities. LBNL will supply this material to the selected vendor. Other progress during FY2008 included the development of an improved thin beryllium window design for the cavity irises.

During FY2008, the progress on developing the final design details of the coupling coil continued at ICST in Harbin. ICST also worked with LBNL on the integration of the coupling coil with the design of the rest of the RFCC module. Hardware related progress at ICST included the assembly of a coil winding facility as well as a coil test station. Using this facility, ICST completed the fabrication of a small test coil (reduced diameter) and began fabrication of a large test coil (Fig. 9) with the same diameter as the actual coupling coils. Other work done at ICST includes carrying out R&D on methods for making joints in the superconducting wire.

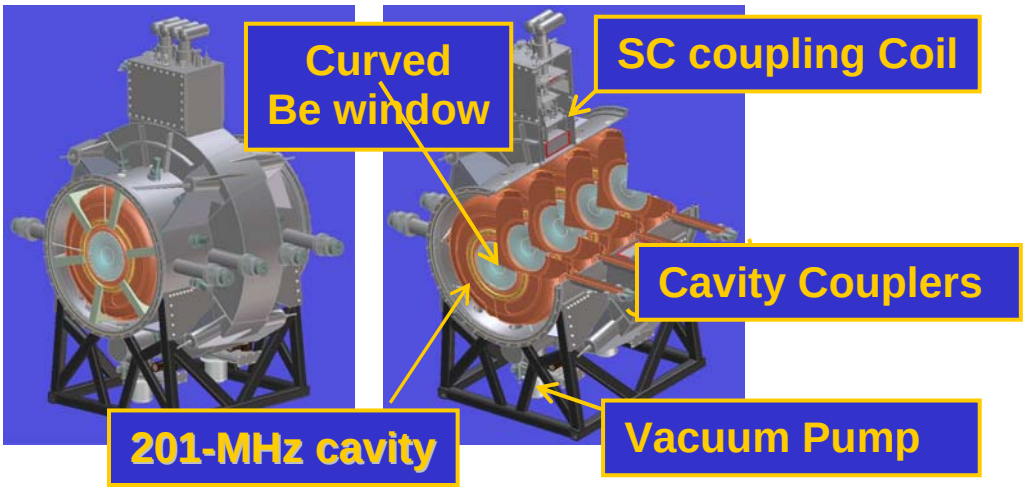

Fig. 8. CAD drawing of RFCC module.

Fig. 9. Cold-mass assembly for large test coil at ICST.

Argonne National Laboratory

ANL provided a staff member (Jim Norem) to help with the planning and execution of the MuCool RF test program at FNAL, in collaboration with the other MuCool institutions (FNAL, IIT, Jlab, and LBNL).

ANL work has provided a first iteration of a model that considers the plasma physics, materials constraints, RF aspects and operational issues of RF arcs in cavities. This model is based on OOPIC Pro simulations of the plasma, along with molecular dynamics simulations of surface failure, Coulomb explosion, fueling, and creep. The code incorporates results from x-ray and other measurements from our own experimental program. The model considers the process to be divided into four parts—surface failure, plasma initiation, exponential plasma growth, and surface damage. It also considers how the four parts are linked and how they can be separated. We believe that our model is the first to offer a detailed examination of this problem.

Both superconducting and normal RF technology developed over the last 20 years are presently unable to routinely reach the gradients required by high energy collider designs.

Using Atomic Layer Deposition (ALD), it seems possible to manufacture thin composite materials that are, in principle, able to avoid all of the presently understood failure mechanisms of existing accelerating structures (both normal and superconducting). We are starting an effort aimed at developing this technology to the point where it could be used to construct the RF structures capable of operating in a Neutrino Factory or Muon Collider, or in optimized linear colliders, such as CLIC or ILC.

Superconducting structures fail due to quenches from various causes and/or field emission and other effects. It seems possible to inexpensively fabricate structures that:

1. coat a substrate with thick layers that increase local radii, decreasing local fields below field emission or breakdown thresholds;
2. can be layered, so critical fields are filtered (in SRF) or pulse heating is diffused (in normal metals);
3. are pure enough that local defects are not significant.

It is important to emphasize that this technology has the potential to significantly improve the performance of both SRF and normal conducting cavities, and might also significantly reduce the cost of these structures.

We produced two papers, one on point-contact tunneling measurements that suggest the presence of magnetic oxides on the surface of cavity-grade niobium that could cause the observed high-field Q slope, and the other on the production of a sharp metal-oxide boundary by coating niobium with alumina and baking it at 700 °C.

We continue developing ALD as a method of coating RF cavities to permit them to reach higher gradients. An initial test of the approach was demonstrated at Jlab to improve the cavity behavior. We are now looking at the problems associated with heating coatings. This project is aimed at producing room-temperature copper accelerating structures that can operate without either breaking down or producing significant dark currents or x-rays. Recent results from the MuCool program have shown that it can be difficult to operate RF accelerating structures in high magnetic fields, as required by existing designs for muon cooling systems. Curing this problem has a very high priority in the muon program. Our measurements have shown that the likely cause of the magnetic field dependence, like the gradient limits of all structures, is due to high local electric fields associated with asperities on the surface of the cavity.

We will test whether ALD can be used to coat the inside of room-temperature structures in the same way we have successfully improved a superconducting cavity operating at many times the field we require for our copper structures. Since ALD synthesizes materials one atomic layer at a time, and other experiments have shown that the coatings produced are highly conformal, they should be able to smooth over rough asperities like snow on a rock pile, producing a minimum asperity radius greater than or equal to the thickness of the coating. This should lead to lowering the mechanical stresses, and thus field-emitted currents, by many orders of magnitude. The ALD process is fast, uses low temperatures and is simple enough to be used *in-situ*. The proposed experiment will coat medium and low frequency cavities in the MTA at Fermilab. This will involve building a new ALD system and some simulation and analysis of the data.

A list of recent ANL papers is given in Section 3.

Thomas Jefferson National Accelerator Facility

In FY2008, Jlab scientists supported the ongoing design work for the cooling and acceleration sections of a Neutrino Factory or Muon Collider. In particular, activities supported the high-gradient cavity test program at the MTA, design activities for the 201-MHz RF cavities for the MICE experiment, and layout of the superconducting recirculating linac (RLA) for the IDS-NF. Some technical assistance was provided in fabricating test button samples for the 805-MHz gradient tests in the MTA, and in evaluating results from those tests.

A list of recent Jlab papers is given in Section 3.

Oak Ridge National Laboratory

MERIT

The MERIT experiment is a proof-of-principle demonstration of the feasibility of using an unconstrained jet of mercury as a target in a Neutrino Factory or Muon Collider. In such facilities, the mercury jet is impacted by a proton beam within a strong solenoidal magnetic field that captures the produced pions and muons while constraining the jet after impact. While previous experiments utilized either jet-plus-field or beam-plus-jet combinations, MERIT was the first effort that included simultaneous use of a mercury jet, a magnetic field, and a proton beam. The mercury system was designed to produce a 1-cm-diameter, 20-m/s jet inside a high-field (15 T) solenoid magnet. A high-speed optical diagnostic system allowed observation of the interaction of the jet with both 14- and 24-GeV proton beams.

The MERIT experiment was conducted at CERN during three weeks in October-November, 2007. ORNL was responsible for the design and development of the mercury target system and operated the system for two of the three weeks of the in-beam experiment, with RAL personnel providing support during the third week. The mercury system performed as expected during the experiment, with no significant operational failures.

After a 3-month radiation cool-down period, the MERIT equipment was decommissioned and prepared for extraction from the experimental area at CERN. ORNL was responsible for the decommissioning of the mercury system with assistance provided by BNL and Princeton personnel. As planned, the equipment has been in storage at CERN since February 2008 for an additional cool-down period before shipment back to the U.S. during FY2009.

A list of recent ORNL papers is given in Section 3.

2. FY2009 Plans

In this section, we describe plans for the NFMCC institutions, based on the Continuing Resolution budget summarized in Table 1. As noted earlier, agreed-upon milestones corresponding to the established funding levels have been developed with each institution and are included as Attachment A.

Brookhaven National Laboratory

During FY2009, BNL activities will fall into four main areas:

- Work on simulations for the design of a Muon Collider
- Work on developing the IDS-NF design of a neutrino factory
- Work on data analysis for the MERIT experiment
- Work on preparations for the EMMA experiment

The first three of these activities are part of the 5-year R&D plan that has been submitted to DOE for its approval. Even in the absence of enhanced funding, these tasks will be carried out at the level that present funding permits. The last activity, which involves the participation by Scott Berg in the EMMA design and commissioning planning, makes use of the specialized expertise available in the U.S. to help in this project, which complements the experimental program under way in the U.S.

Muon Collider

BNL has been on the forefront of Muon Collider design and simulations for many years, and is continuing that role. Ongoing development of ICOOL to handle the Muon Collider parameter regime will continue this year. One goal is to create an ICOOL model of the Guggenheim channel that incorporates realistic fields, working in conjunction with UC-Riverside staff. With the help of a post-doc, we will continue to investigate alternative cooling schemes, with the goal of developing concepts that are more easily buildable. The primary issue here is that related to the degradation in achievable gradient due to the influence of magnetic field on the cavities. Our newly written code CAVEL will be used by a post-doc, and will be cross checked against other, similar, codes to refine the model being employed. In particular, secondary emission will be added this year. We will also provide a post-doc to work toward developing a model of cavity asperities, as this is expected to be a key ingredient in understanding breakdown phenomena. This activity will be done in consultation with ANL staff.

IDS-NF

Our work for the IDS-NF will concentrate mainly in two areas, target facility design and acceleration system design. In the former case, we will work with ORNL engineers to define a baseline target facility for the Neutrino Factory RDR. We will provide the physics inputs and requirements and they will be responsible for the engineering aspects of the facility, following the collaboration begun during Feasibility Study 2 some years ago. BNL staff (Berg) will also coordinate the acceleration system design activity for the IDS-NF, including work done at Jlab and RAL as well as at BNL. This is an ongoing activity for us, stemming back to the days of the International Scoping Study.

MERIT

We will continue our work in MERIT this year, with two main tasks—completing decommissioning of the experiment at CERN, in collaboration with ORNL, and working on data analysis with colleagues at CERN and Princeton. The specific decommissioning tasks assigned to BNL include:

- re-survey of nTOF beam line
- storage of activated Hg in controlled Area
- storage of activated Hg injection system
- radiological monitoring of activated components (Hg, injection system, hydraulic fluid, pulsed solenoid)
- preparations of Hg and Hg injection system for shipment to U.S.
- shipment of optical diagnostic equipment to U.S.
- shipment of injection system to U.S.
- shipment of activated Hg to U.S.

A complementary list for ORNL will be presented below. Other MERIT related activities will include completing the analysis of the optical data, which will involve preparing for the thesis defense for a graduate student, and participating, with CERN and Princeton, in the analysis of the particle production data.

EMMA

EMMA, an electron model of a non-scaling FFAG ring, is primarily a UK-sponsored project at Daresbury Lab. Our task is to support, at a modest level, the lattice design effort, especially considerations of injection and extraction, based on our expertise in the lattice design and performance expectations for this type of machine. While this is a UK project, the NFMCC has a strong interest in its successful outcome and our service in an advisory capacity is of benefit to both sides.

Fermi National Accelerator Laboratory

MuCool

We will be bringing the MuCool Test Area (MTA) back online in early FY2009, after an extensive reconfiguration effort that will allow us to eventually do beam experiments in the area. Upon restarting the RF program, our first tests will be with the 805-MHz LBNL cavity after it is refurbished at Jlab. The cavity, once delivered to Fermilab, will be installed in the 5-T solenoid in the MTA and will first be reconditioned with Cu windows and magnetic field. Once maximum stable operating gradient limits as a function of *B* are determined, a new series of tests on buttons of various manufacture will be performed. We envision some tests of the 201-MHz system, but these will be limited, since we are awaiting a new superconducting Coupling Coil magnet before continuing with extensive tests (the magnet is expected to arrive in FY2010).

In FY2009 we will take delivery of the LiH disks fabricated at Y12 and perform thermal tests on one of them.

IDS-NF

We will continue our participation in the IDS-NF, focusing on the front-end of the facility, a low-energy option and detector simulations for the low-energy option. We will carry out site-dependent studies of tunneling issues that pertain to the FNAL site. The baseline configuration adopted by the IDS-NF leadership, based largely on Feasibility Study 2a, is shown in Fig. 10.

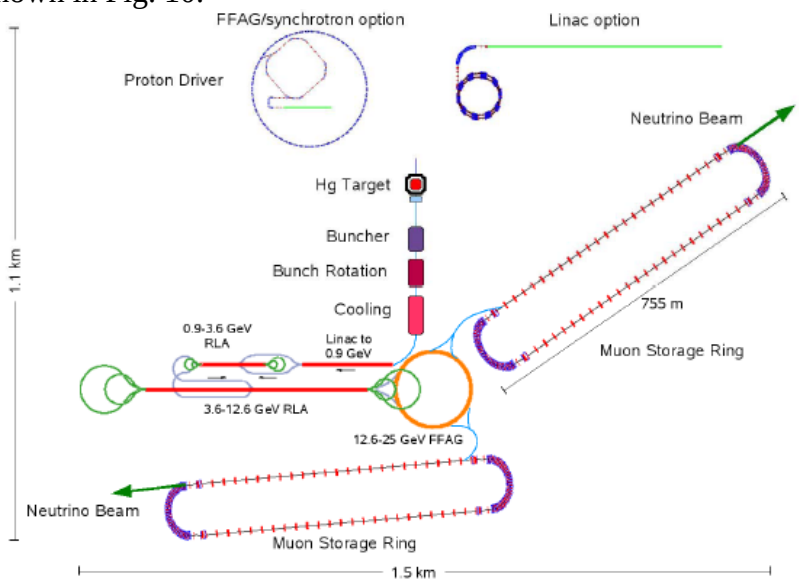

Fig. 10. Baseline Neutrino Factory design for the IDS-NF.

MICE

In FY2009 we will continue to commission the MICE experiment, in particular to support installation and commissioning of the two tracker systems. We also plan to complete the magnetic field mapping of the two MICE spectrometer solenoids for LBNL before shipping them off to RAL. We plan to provide a LiH absorber disk to be used temporarily as an absorber in the MICE experiment, denoted "Step 3.1." This disk will have its carbon-fiber mounting hardware attached and will then be shipped to Rutherford Appleton Laboratory.

Lawrence Berkeley National Laboratory

MuCool

During FY2009, we will resume the 805-MHz cavity button tests at the MTA and, as appropriate, continue the 201-MHz cavity testing. New TiN coatings will be added to the cavity button holders. A more systematic RF button test plan will be developed in order to understand the RF gradient degradation and RF breakdown due to the external magnetic fields. LBNL will help with the cavity test setup (calibration, coupler tuning, etc.), and plans to actively participate in the tests at the MTA.

In collaboration with Fermilab, BNL, ANL, Jlab and SLAC, we will continue the computational RF breakdown studies and attempt to understand the effectiveness of a

magnetically-insulated RF cavity. LBNL will help with the RF cavity design for the magnetically-insulated cavity studies.

MICE

The goals for the Spectrometer Solenoids for FY2009 include completion of the fabrication of both magnet systems. Upon completion, each magnet will be cooled down and tested at the vendor at full design current. After acceptance of each magnet by LBNL, it will be shipped to FNAL for magnetic measurements and characterization. The testing at FNAL will include mounting of the iron shields at both ends of the first magnet and at one end of the second magnet. We are having the iron shields fabricated at a vendor in the Chicago area to minimize transportation costs. After completion of the magnetic measurements, each of the Spectrometer Solenoids will be shipped, in turn, to Rutherford Appleton Laboratory (RAL) for incorporation into the MICE beam line. In the current plan, both magnets will be delivered to RAL before the end of FY2009. There will be a gap of about three months between the completion of the first and second magnet.

Goals for the RFCC module for FY2009 include the partial completion of the first five RF cavities for use in the first module. Material for as many as ten cavities will be received by LBNL and an order placed with an outside vendor for the fabrication of the first five cavities (with an option for an additional five cavities) during FY2009. The detailed design for the remaining RFCC module components will be completed this year. This includes the design of the cavity support system, cavity tuners, module vacuum vessel, module support stand, and module pumping system. Additionally, the thin beryllium windows for the first RFCC module (8 windows plus spares) will be procured by the University of Mississippi.

The effort to fabricate the MuCool and MICE coupling coils at ICST in China will continue during FY2009. Fabrication and testing of a scaled-down version of the coupling coil will be completed during the first half of the fiscal year. The test coil (shown in Fig. 9 earlier) has the same diameter and number of layers as the actual coupling coils but is only one-quarter its length. Upon successful operation of the test coil, ICST will begin the fabrication of the three coupling coils, probably in partnership with a qualified vendor. Before the end of FY2009, it is expected that at least one of the coils will be wound on its mandrel, and the MuCool coil cold mass will be complete and ready for installation in its vacuum vessel. ICST will also complete the detailed design of a dedicated support stand for the operation of the MuCool coupling coil at FNAL. (The stand will be fabricated by the University of Mississippi.) During FY2009, LBNL will continue to procure and provide materials such as superconductor, cryocoolers, epoxy and electrical components to ICST for the fabrication of the magnets.

LBNL staff will continue to help manage the MICE collaboration. Not surprisingly, these roles require significant travel to carry out.

Argonne National Laboratory

FY2009 funding for ANL supports the effort on MuCool of Jim Norem. Plans for this year include continuing modeling efforts to describe RF cavity breakdown phenomena.

Norem will also participate in the ongoing MuCool cavity measurement program, including both materials tests at 805 MHz and prototype cavity tests at 201 MHz.

An expanding focus this year will be on the use of Atomic Layer Deposition (ALD) to tailor the surface properties of RF cavities. Initial tests on a superconducting cavity carried out in collaboration with Jlab showed that the approach has promise for superconducting cavities. That effort will continue this year to develop an understanding of what ALD might eventually offer for the performance of 201-MHz superconducting cavities, which are required in the acceleration system of a Neutrino Factory or Muon Collider. Additional work will be carried out to explore whether ALD techniques offer potential benefit in improving the breakdown effects for copper cavities. If these studies look encouraging, plans for fabricating an 805-MHz ALD-treated test cavity will be developed.

We are going to publish our model of RF breakdown and gradient limits and then continue refining the details that control many of the more easily accessible experimental variables, such as material, coatings, damage type and geometry dependence.

We are planning the construction of a new ALD facility for SRF cavities that will be able to coat and heat deposited layers in an arbitrary order. This will allow us to produce layered structures that hopefully reach the maximum allowable fields. To be successful, considerable time will need to be spent on surface chemistry and surface models.

We are talking to a commercial company that is able to provide a source of plasma we can use for our ALD experiments, and we are exploring the possibility of using this source in a system that could coat a room-temperature cavity in the MTA. This MuCool experiment will be done in cooperation with Fermilab, who will provide the cavities, the support hardware, and some of the people.

Thomas Jefferson National Accelerator Facility

Jlab staff will continue their involvement in the NFMCC program at a low, but extremely important, level. Rimmer will continue to participate in the MuCool RF program, where his experience provides invaluable guidance. He also serves as a member of the NFMCC Technical Board. During FY2009, Jlab has provided technical help in refurbishing the existing 805-MHz pillbox cavity and getting it ready to run again. During this year, a goal of the program is to revive the effort in thin-film superconducting RF (SRF) cavities that was initiated some years ago by Cornell. Jlab staff have a lot of experience in SRF cavities and will give a big boost to this enterprise.

Jlab staff have also continued to provide leadership in the IDS-NF acceleration system area. Bogacz has carried out most of the beam optics design and layout work (see Fig. 11) for the acceleration system, and in December 2008 organized a workshop on this topic at Jlab for the IDS-NF accelerator working group.

Oak Ridge National Laboratory

During FY2009, ORNL will focus mainly on two tasks—completing the decommissioning of MERIT and carrying out design studies for the IDS-NF. That is, ORNL will receive and store the MERIT mercury system equipment in Oak Ridge. Inspection of some portion of the primary mercury containment interior will be performed to determine if any mercury-induced mechanical damage is apparent. Depending on cost, some components of the mercury system that may still show residual activation will be dismantled and disposed of. Specific ORNL tasks for MERIT include:

- monitoring of Hg and Hg injection system storage integrity
- receiving Hg and Hg injection system at ORNL
- disposal of activated Hg
- disposal of primary containment at ORNL
- refurbishment of Hg-wetted injection system components
- disposal of activated hydraulic fluid
- replacement of hydraulic fluid
- restoration of Hg Injections system functionality

Fig. 11. Layout of IDS-NF baseline acceleration system.

With the completion of these tasks, and the complementary tasks by BNL listed earlier, the U.S. commitment for the MERIT experiment will have ended. There remains much work to be done in analyzing and publishing the data, of course, but the experimental program itself will have concluded.

For the second task, ORNL engineers will begin to revisit the target facility design developed in Feasibility Study 2 some years ago. The initial goal will be to refine the original concepts and begin to flesh out details that can be used for an updated costing exercise. Ultimately, we plan to produce a document describing a conceptual mercury target system for a Neutrino Factory.

3. Publications

In this section we list recent publications by institution. Because much of the NFMCC work involves multiple institutions, there will inevitably be some duplication in such a list.

Brookhaven National Laboratory

1. J. Scott Berg, "R&D Topics for Neutrino Factory Acceleration," Proc. of Ninth International Workshop on Neutrino Factories, Superbeams, and Betabeams, Okayama University, Okayama, Japan, August 6–11, 2007, AIP Conf. Proc. 981, 327 (2007).

2. J. Scott Berg, “The Emma Lattice,” in Proc. Ninth International Workshop on Neutrino Factories, Superbeams, and Betabeams, Okayama University, Okayama, Japan, August 6–11, 2007, AIP Conf. Proc. 981, 330 (2007).
3. J. Scott Berg, “Using FFAGs in the Creation of Neutrino Beams,” Proc. Ninth International Workshop on Neutrino Factories, Superbeams, and Betabeams, Okayama University, Okayama, Japan, August 6–11, 2007, AIP Conf. Proc. 981, 117 (2007).
4. J. Scott Berg (Informal Report) , “Dynamics in a Spiral FFAG with Tilted Cavities,” unpublished.
5. J. Scott Berg, “A Hamiltonian Formulation for Spiral-Sector Accelerators,” Proc. FFAG Workshop ’07, Kyoto University Research Reactor Institute, Osaka, Japan, 5–10 November, 2007.
6. J. Scott Berg, “The EMMA Commissioning Procedure,” Proc. FFAG Workshop ’07, Kyoto University Research Reactor Institute, Osaka, Japan, 5–10 November, 2007.
7. Robert B. Palmer, J. Scott Berg, Richard C. Fernow, Juan C, Gallardo, Harold G. Kirk, “Open Cavity Solutions to the RF in Magnetic Field Problem,” Proc. Ninth International Workshop on Neutrino Factories, Superbeams, and Betabeams, Okayama University, Okayama, Japan, August 6–11, 2007, AIP Conf. Proc. 981, 306 (2007).
8. J. Scott Berg, “The EMMA Main Ring Lattice,” Informal Report, February 2008.
9. J.S. Berg, *et al.*, “Accelerator Design Concept for Future Neutrino Facilities,” submitted to JINST.
10. I. Chemakin, *et al.*, “Pion production by protons on a thin beryllium target at 6.4, 12.3, and 17.5 GeV/c incident proton momenta,” Physical Review C 77, 015209 (2008).
11. H. Park, T. Tsang, H. G. Kirk, F. Ladeinde, V. B. Graves, P. T. Spampinato, A. J. Carroll, P. H. Titus and K. T. McDonald, “Optical Diagnostics of Mercury Jet for an Intense Proton Target,” Rev. Sci. Instrum. 79, 045111 (2008).
12. I. Efthymiopoulos, *et al.*, “The MERIT(nTOF-11) High Intensity Liquid Mercury Target Experiment at the CERN PS,” Proc. EPAC08 11th European Particle Accelerator Conf., Genoa, Italy, June 23–27, 2008, p. 262.
13. H. Kirk, *et al.*, “The MERIT High-Power Target Experiment at the CERN PS,” Proc. of EPAC08 11th European Particle Accelerator Conf., Genoa, Italy, June 23–27, 2008, p. 2886.
14. H. Kirk, *et al.*, “A 15-T Pulsed Solenoid for a High-Power Target Experiment,” in Proc. EPAC08 11th European Particle Accelerator Conf., Genoa, Italy, June 23–27, 2008, p. 2889.
15. N. Simos, H. Kirk, K. McDonald, “Experimental Study of Radiation Damage in Carbon Composites and Graphite Considered as Targets in the Neutrino Super Beam,” in Proc. EPAC08 11th European Particle Accelerator Conf., Genoa, Italy, June 23–27, 2008, p. 280.
16. N. Simos, H. Kirk, P. Thieberger, H. Ludewig, J. O. Conor, L. Mausner, P.-T. Trung, K. T. McDonald, K. Yoshimura, and J. R. J. Bennett, “Irradiation Damage Studies of High Power Accelerator Materials, J. Nucl. Mater. 377**,** 41 (2008)
17. R. B. Palmer, R. C. Fernow, Juan C. Gallardo, Diktys Stratakis and Derun Li, “RF Breakdown with and without External Magnetic Fields, submitted to Physical Review Special Topics – Accelerators and Beams.

18. S. A. Kahn, S. Korenev, M. Bishai, M. Diwan, J. C. Gallardo, A. Hershcovitch, B. M. Johnson, "Plasma Lens for Muon and Neutrino Beams," in Proc. EPAC08 11th European Particle Accelerator Conf., Genoa, Italy, June 23–27, 2008, p. 718.

Fermi National Accelerator Laboratory

19. A. Bross, M. Ellis, S. Geer, O. Mena and S. Pascoli, "The low-energy neutrino factory," Proc. Ninth International Workshop on Neutrino Factories, Superbeams, and Betabeams, Okayama University, Okayama, Japan, August 6–11, 2007, AIP Conf. Proc. 981, 187 (2008).
20. D. Neuffer, "Low-energy Ionization Cooling of Ions for Beta-Beam Sources," Nucl Inst. and Methods A, 585, 109 (2008).
21. C. Yoshikawa *et al.*, "Isochronous Pion Decay Channel for Enhanced Muon Capture," in Proc. EPAC08 11th European Particle Accelerator Conf., Genoa, Italy, June 23–27, 2008, p.2785.
22. R. Palmer *et al.*, "A Complete Scheme for a Muon Collider," NF/MC Note 519, in Proc. COOL07, Bad Kreuznach, Germany, September 10–14, 2007, p. 77.
23. D. Li *et al.*, "The MuCool/MICE RF Cavity R&D Programs," Proc. Ninth International Workshop on Neutrino Factories, Superbeams, and Betabeams, Okayama University, Okayama, Japan, August 6–11, 2007, AIP Conf. Proc. 981 299 (2008).
24. M. BastaniNejad *et al.*, "Studies of Breakdown in a Pressurized RF Cavity," in EPAC08 11th European Particle Accelerator Conf., Genoa, Italy, June 23–27, 2008, p. 736.
25. D. Neuffer, "Parameters for a Project X–based Muon Collider" NF/MC Note 517, March 2008.
26. D. Neuffer, "Recent Results on Muon Capture for a Neutrino Factory and Muon Collider," NF/MC Note 520, January, 2008.
27. D. Neuffer, "Ionization Cooling of Ions for Beta-Beam Sources," MC/NF Note 516, August 2007.
28. D. Neuffer, "Muon Cooling in a Quadrupole Channel," NF/MC Note 512, August 2007.
29. A. Bross, "Muon Acceleration: Introduction and R&D on Limiting Technologies," in Proc. 10th International Workshop on Neutrino Factories, Super Beams, and Beta Beams, Valencia, Spain, June 30 – July 5, 2008, Proc. of Science (NuFact08) 018, July, 2008.
30. S. Geer, "Can we share a muon source among NF, MC and low energy muon programmes?," in Proc. 10th International Workshop on Neutrino Factories, Super Beams, and Beta Beams, Valencia, Spain, June 30 – July 5, 2008, Proc. of Science (NuFact08) 082, July, 2008.
31. A. Bross, "The Totally Active Scintillator Detector," in Proc. 10th International Workshop on Neutrino Factories, Super Beams, and Beta Beams, Valencia, Spain, June 30 – July 5, 2008, Proc. of Science (NuFact08) 043, July, 2008.
32. D. Neuffer, "Pros and cons of existing cooling schemes," 10th International Workshop on Neutrino Factories Superbeams and Betabeams, Proceedings of Science, PoS(Nufact08) 078, July, 2008.

Lawrence Berkeley National Laboratory

33. D. Li, "Muon Cooling R&D Progress in the US," Proc. of NuFact07, Okayama, Japan, August 6–11, 2007, AIP Conf. Proc. 981 112 (2008).
34. D. Li, M. Dickenson, S. Virostek, M.S. Zisman, A. Bross, A. Moretti, Z. Qian, J. Norem, R. Rimmer, D. Huang, Y. Torun, D. Summers, W. Lau, and S. Yang, "MuCool/MICE RF Cavity R&D Programs," Proc. Ninth International Workshop on Neutrino Factories, Superbeams, and Betabeams, Okayama University, Okayama, Japan, August 6–11, 2007, AIP Conf. Proc. 981 299 (2008).
35. D. Li and C. Ohmori, "Summary of Working Group on Accelerator Physics," Proc. Ninth International Workshop on Neutrino Factories, Superbeams, and Betabeams, Okayama University, Okayama, Japan, August 6–11, 2007, AIP Conf. Proc. 981 270 (2008).
36. M. S. Zisman, "MICE Construction Status," Proc. Ninth International Workshop on Neutrino Factories, Superbeams, and Betabeams, Okayama University, Okayama, Japan, August 6–11, 2007, AIP Conf. Proc. 981 293 (2008).
37. S. Geer and M. S. Zisman, "Neutrino Factories: Realization and Physics Potential," Progress in Particle and Nuclear Physics 59, 631 (2007).
38. M. S. Zisman, "Technical Challenges and Scientific Payoffs of Muon Beam Accelerators for Particle Physics," to be published in IEEE Transactions on Applied Superconductivity 18, 82 (2008).
39. A. Charman, "Quantum Mechanical treatment of Transit Time Optical Cooling of Muons," Chapter 5 in Random Aspects of Beam Physics and Laser-Plasma Interactions, Ph.D. Thesis, University of California, Berkeley, 2007.
40. M. A. Green, "The Effect of Extending the Length of the Coupling Coils in a Muon Ionization Cooling Channel," Proceedings of Nufact-07, Okayama, Japan, August 6–11, 2007, AIP Conf. Proc. 981, 339(2007), LBNL-63587, MICE Note 194.
41. M. A. Green, H. Wu, L. Wang, L. L. Kai, L. X. Jia, and S. Q. Yang "AC Losses in the MICE Channel Magnets Is This a Curse or a Blessing?", LBNL-63804, MICE Note 195, (31 Jan. 2008).
42. H. Wu, L. Wang, X. K. Liu, C. S. Liu, L. K. Li, F. Y. Xu, L. X. Jia, and M. A. Green, "A Single-band Cold Mass Support System for MICE Superconducting Coupling Magnet." Proc. of 22nd International Conference of Cryogenics and Refrigeration, Shanghai China, p 351, LBNL-896E, MICE Note 218, April 2008.
43. L. Wang, L. K. Li, H. Wu H, H. Pan, F. Y. Xu, X. K. Liu, L. X. Jia, and M. A. Green, "Design of Current Leads for the MICE Coupling Magnet,", Proc. of 22nd International Conference of Cryogenics and Refrigeration, Shanghai China, p 347, LBNL-903E, MICE Note 219, April 2008.
44. M. A. Green, and S. P. Virostek, "The Dimensions and Number of Turns for the Tracker Solenoids: As-built compared to the Original Magnet Design," LBNL-899E, MICE Note 207, June 2008.
45. M. A. Green, "A Design of a Rapid Discharge Varistor System for the MICE Magnet Circuits," LBNL-900E, MICE Note 208, June 2008.
46. M. A. Green and S. T. Wang, "Tests of Four PT-415 Coolers Installed in the Drop-in Mode," to be published in the Proceedings ICEC-22 in Seoul Korea, 21–25 July 2008, MICE Note 231 (July 2008).

47. H. Wu, L. Wang, M. A. Green, L. K. Li, F. Y. Xu, X. K. Liu, and L. X. Jia ,"AC Loss Analysis and Experimental Study on the Coupling Solenoid in MICE," to be published in the Proceedings ICEC-22 in Seoul Korea, 21–25 July 2008, MICE Note 232.
48. L. Wang, H. Pan, X. K. Liu, A. B. Chen, L. K. Li, X. L. Guo, H. Wu, M. A. Green, D. R. Li, B. P. Strauss, "Design and Construction of Test Coils for the MICE Coupling Solenoid Magnet," submitted to IEEE Transactions on Applied Superconductivity 19, to be published, MICE Note 233, August 2008.
49. L. Wang, F. Y. Xu, X. K. Liu, L. K. Li, X. L. Guo, H. Pan, A. B. Chen, M. A. Green, D. Li, and S. P. Virostek, "Magnetic and Cryogenic Design of the MICE Coupling Solenoid Magnet System," submitted to IEEE Transactions on Applied Superconductivity 19, to be published, MICE note 234, August 2008.
50. X. L. Guo, L. Wang, F. Y. Xu, M. A. Green, H. Pan, H. Wu, X. K. Liu, L. X. Jia, and K. Amm, "Quench Protection for the MICE Cooling Channel Coupling Magnet," submitted to IEEE Transactions on Applied Superconductivity 19, to be published, MICE Note 235, August 2008.
51. S. T Wang, R. Wahrer, C. Taylor, L. Xu, J. Y. Chen, M. Wang, T. Juang, M. S. Zisman, S. P. Virostek, and M. A. Green, "The Design and Construction of the MICE Spectrometer Solenoids," submitted to IEEE Transactions on Applied Superconductivity 19, to be published, MICE Note 236, August 2008.
52. M. A. Green, D. Li, S. P. Virostek, M. S. Zisman, S. T. Wang, R. Wahrer, C. Taylor, X. Lu, J. Y. Chen, M. Wang, and T Juang, "Preliminary Test Results for the MICE Spectrometer Superconducting Solenoids," submitted to IEEE Transactions on Applied Superconductivity 19, to be published, MICE Note 237, August 2008.
53. R. B. Palmer, R. C. Fernow, Juan C. Gallardo, Diktys Stratakis, and Derun Li, "RF Breakdown with External Magnetic Fields in 201 and 805 MHz Cavities", submitted to Physical Review ST-AB (December 2008).
54. J. Shi, H.B. Chen, C.X. Tang, S.X. Zheng, W.H Huang, J.G. Power, C.G. Jing, K.J. Kim, W. Gai, and D. Li, "A 3-Cell Deflecting Mode Cavity Design for Emittance Exchange at ANL," to be published in *Nuclear Instrumentation and Methods in Physics Research Section A* (December 2008).
55. Jia-Ru Shi, Huai-Bi Chen, Chuan-Xiang Tang, Shu-Xin Zheng, D. Li, "LOM and HOM Damping Study in a Superconducting Deflecting Cavity for the ALS at LBNL," *Chinese Physics C* (in Chinese) 32: 205208 (2008).
56. M. S. Zisman, "Future Accelerator Challenges in Support of High-Energy Physics," to be published in Proc. of 2008 Beam Instrumentation Workshop, Granlibakken, CA.
57. D. Li, A. DeMello, S. Virostek, M. Zisman, and R. Rimmer, "A 201-MHz Normal Conducting RF Cavity for the International MICE Experiment," in Proc. of EPAC-2008, Genoa, Italy, June 23–27, 2008, p. 784.
58. J. Shi, H.B Chen, C.X Tang, H. Wang, R. Rimmer, P. Kneisel, L. Turlington, G. Cheng, G. Ciovati, G. Slack, G. Waldschmidt, A. Nassiri, and D. Li, "Superconducting RF Deflecting Cavity Design and Prototype for Short X-ray Pulse Generation," Proceedings of EPAC-2008, Genoa, Italy, June 23–27, 2008, p. 913.
59. R. B. Palmer, R. C. Fernow, J. C. Gallardo, D. Stratakis, and D. Li, "RF Breakdown in External Magnetic Field," in Proc. 10th International Workshop on Neutrino

Factories, Super Beams, and Beta Beams, Valencia, Spain, June 30 – July 5, 2008, Proc. of Science (NuFact08)081.
60. D. Li, "RF R&D for Muon Ionization Cooling Channels," in Proc. 10th International Workshop on Neutrino Factories, Super Beams, and Beta Beams, Valencia, Spain, June 30 – July 5, 2008, Proc. of Science (NuFact08)080.
61. M. S. Zisman, "Experimental Tests of Cooling: Expectations and Additional Needs," in Proc. 10th International Workshop on Neutrino Factories, Super Beams, and Beta Beams, Valencia, Spain, June 30 – July 5, 2008, Proc. of Science (NuFact08)079.
62. P. Huber and M. S. Zisman, "Optimization of a Neutrino Factory," in Proc. 10th International Workshop on Neutrino Factories, Super Beams, and Beta Beams, Valencia, Spain, June 30 – July 5, 2008, Proc. of Science (NuFact08)053.
63. D. Li and M. Meddahi, "Accelerator Working Group WG3 Summary," in Proc. 10th International Workshop on Neutrino Factories, Super Beams, and Beta Beams, Valencia, Spain, June 30 – July 5, 2008, Proc. of Science (NuFact08)029.

Argonne National Laboratory

64. T. Proslier *et al.*, "Results from Atomic Layer Deposition and Tunneling Spectroscopy for Superconducting RF Cavities," Proc. EPAC08 11th European Particle Accelerator Conf., Genoa, Italy, June 23–27, 2008, p. 2749.
65. R. Sandström, D. Huang, and J. Norem, "Study of Radiation from RF Cavities," Proc. EPAC08 11th European Particle Accelerator Conf., Genoa, Italy, June 23–27, 2008, p. 805.
66. Z. Insepov, J. Norem, A. Hassanein, and A. T. Wu, "Advanced Surface Polishing for Accelerator Technology Using Ion Beams," International Conference on the Application of Accelerators in Research and Industry (CAARI), August 10–15, 2008.
67. Z. Insepov, J. Norem, D. R. Swenson, and A. Hassanein, "Surface Erosion and Modification by Energetic Ions, Vacuum 82, 872(2008).
68. T. Proslier, J. Zasadzinski, L. Colley, M. Pellin, J. Norem, J. Elam, C. Z. Anntoine, R. Rimmer, and P. Kneisel, "Tunneling Study of SRF Cavity-grade Niobium," submitted to the Applied Superconductivity Conference, Chicago, August 17–22, 2008.
69. T. Proslier, J. F. Zasadzinski, L. Cooley, C. Antoine, J. Moore, J. Norem, M. Pellin, and K. E. Gray, "Tunneling Study of Cavity-grade Nb: Possible Magnetic Scattering at the Surface," Appl. Phys. Lett. 92, 212505 (2008).
70. T. Proslier, J. Zasadzinski, J. Moore, M. Pellin, J. Elam, L. Cooley, C. Antoine, J. Norem, and K. E. Gray, "Improvement and Protection of Niobium Surface Superconductivity by Atomic Layer Deposition and Heat Treatment," Appl. Phys. Lett. 93, 192504 (2008).
71. Z. Insepov, J. Norem, A. Bross, A. Moretti, Z. Qian, Y. Torun, D. Huang, R. A. Rimmer, S. Mahalingham, S Veitzer, "A Model of RF Breakdown Arcs," submitted to Phys, Rev. ST-AB.

Thomas Jefferson National Accelerator Facility

72. S. A. Bogacz, "Pros and Cons of Muon Acceleration Scheme," in Proc. 10th International Workshop on Neutrino Factories, Super Beams, and Beta Beams, Valencia, Spain, June 30 – July 5, 2008, Proc. of Science (NuFact08)051.

73. S. A. Bogacz, "Linacs for Future Muon Facilities," Proc. 24th Linear Accelerator Conf., Vancouver, B.C., September 29–October 3, 2008, to be published.

Oak Ridge National Laboratory

74. I. Efthymiopoulos, A. Fabich, M. Palm, J. Lettry, F. Haug, H. Pernegger, R. Steerenberg, A. Grudiev, H. Kirk, T. Tsang, N. Mokhov, S. Striganov, A. Carroll, V. Graves, P. Spampinato, K. McDonald, J. Bennett, O. Caretta, P. Loveridge, H. Park, "The MERIT (nTOF-11) High Intensity Liquid Mercury Target Experiment at the CERN PS," Proc. EPAC08 11th European Particle Accelerator Conf., Genoa, Italy, June 23–27, 2008, p. 262.
75. H. Kirk, T. Tsang, I. Efthymiopoulos, A. Fabich, F. Haug, J. Lettry, M. Palm, H. Pereira, N. Mokhov, S. Striganov, A.. Carroll, V. Graves, P. Spampinato, K. McDonald, J. Bennett, O. Caretta, P. Loveridge, H. Park, "The MERIT High-Power Target Experiment at the CERN PS," Proc. of EPAC08 11th European Particle Accelerator Conf., Genoa, Italy, June 23–27, 2008, p. 2886.
76. H. Park, T. Tsang, H.G. Kirk, F. Ladeinde, V.B. Graves, P.T. Spampinato, A.J. Carroll, P.H. Titus, K.T. McDonald, "Optical Diagnostics of Mercury Jet for an Intense Proton Target," Review of Scientific Instruments 49, 045111 (2008).

Attachment A: 2009 Milestone Table

Prior to distribution of FY09 funds, the following milestones were agreed upon by the NFMCC Project Manager and the various institutional representatives. Fermilab milestones, in particular, depend on getting some relief on the present funding limit for muon-related activities.

FNAL [Bross]

Milestone	Date	Deliverable
Restart 805-MHz cavity button tests	Mar-09	NFMCC note
Continue 201-MHz cavity tests in magnetic field	Feb-09	MICE note
Complete installation of MTA transfer line	Dec-08	Inspection
Procure LiH disks for MICE	Jun-09	Fabrication report
Perform thermal tests on LiH disk	Sep-09	Engineering report
Complete commissioning of MTA cryogenics system	Jan-09	NFMCC note
Complete mapping of MICE spectrometer solenoids	Aug-09	MICE note
Support MICE operation	Sep-09	Inspection
Begin beam tests in MTA	Jun-09	FNAL technical note
Continue NFMCC management task	Sep-09	Inspection
Continue design work for muon collider cooling channel	May-09	PAC09 paper
Continue design work for muon collider ring	May-09	PAC09 paper
Fabricate and test simple 805-MHz cavity with variable orientation to magnetic field	Sep-09	NFMCC or MCTF note
Install MTA beam absorber	Sep-09	Inspection
Test high-pressure RF cavity with beam in MTA	Sep-09	NFMCC or MCTF note

ANL [Norem]

Milestone	Date	Deliverable
Update proposal for using ALD for SRF cavities	Jan-09	Proposal submitted
Prepare paper on modeling cavity arcing phenomena	Mar-09	Paper submitted
Obtain initial results for influence of molecular dynamics on cavity arcs	Mar-09	NFMCC note
Begin beam tests in MTA (with FNAL and IIT)	Jun-09	FNAL technical note
Complete initial phase of molecular dynamics study in breakdown arcs	Sep-09	NFMCC presentation
Begin tests of plasma enhanced ALD	Sep-09	NFMCC presentation

BNL [H. Kirk]

Milestone	Date	Deliverable
Design EMMA injection and extraction systems	Feb-09	EMMA technical note
Organize acceleration activities for IDS-NF	Sep-09	Inspection
Include secondary emission model in CAVEL breakdown simulations	Mar-09	Web posting
Create ICOOL model of Guggenheim cooling channel with realistic fields	Apr-09	NFMCC presentation
Develop 805-MHz cooling lattice based on magnetically insulated cavities	Jun-09	NuFact09 presentation
Design demonstration experiment for magnet insulation of RF cavity	Jun-09	NuFact09 presentation
Develop model of cavity asperities	Aug-09	NFMCC note
Complete MERIT-based Ph.D. thesis defense	Jun-09	Thesis defense complete

ORNL [Burgess]

Milestone	Date	Deliverable
Prepare MERIT Hg and Hg delivery system for shipment from CERN to ORNL	Apr-09	Inspection
Carry our target facility design studies for IDS-NF	Sep-09	IDS note

LBNL [Zisman]

Milestone	Date	Deliverable
Continue project management of NFMCC	Sep-09	Inspection
Deliver first Spectrometer Solenoid magnet to Fermilab for magnetic measurements	Mar-09	Inspection
Deliver second Spectrometer Solenoid magnet to Fermilab for magnetic measurements	May-09	Inspection
Receive copper sheets for MICE RF cavity fabrication	Jan-09	Inspection
Award contract for RF cavity fabrication	Mar-09	Contract signed
E-beam weld half-shells together for first 5 cavities	Jun-09	Inspection
Install first Spectrometer Solenoid at RAL	Jun-09	Inspection
Continue management of MICE	Sep-09	Inspection
Participate in NuFact09	Aug-09	Paper submitted
Prepare FY10 NFMCC budget	Sep-09	Approved by NFMCC TB
Participate in MICE Executive, Technical, and Collaboration Boards	Sep-09	Inspection
Continue oversight of MTA RF test program	Sep-09	Inspection
Participate in NFMCC Executive and Technical Boards	Sep-09	Inspection

Princeton [McDonald]

Milestone	Date	Deliverable
Continue leadership of MERIT experiment	Sep-09	Inspection
Continue MERIT data analysis and publish MERIT results in refereed journal	Sep-09	Paper submitted
Participate in preparation of Target section of IDS-NF Interim Design Report	Sep-09	NuFact08 paper
Study effects of containment vessel erosion due to Hg droplets	Sep-09	NFMCC note
Begin participation in Muon Collider study	Mar-09	Inspection

Jlab [Rimmer]

Milestone	Date	Deliverable
Continue planning of, and participation in, RF cavity test program	Sep-09	Attend RF meetings
Continue lattice studies for muon acceleration schemes	Sep-09	NuFact09 paper
Support MICE RF system design and fabrication	Sep-09	Attend MICE meetings
Restart low-frequency SRF thin-film cavity development	Sep-09	Thin film sample tests

UCLA [Cline]

Milestone	Date	Deliverable
Carry out ICOOL simulation of Li lens linear channel	Sep-09	NFMCC presentation
Study Muon Collider lattice having split dipoles	May-09	PAC09 paper
Continue study of scientific goals of muon collider	Sep-09	PAC09 paper

U-Miss. [Summers]

Milestone	Date	Deliverable
Support Cherenkov detectors at MICE	Sep-09	Inspection
Fabricate absorber windows for MICE	Jan-09	Inspection
Finalize design and begin fabrication of MuCool coupling coil support	May-09	Inspection
Develop cost estimate for fast-cycling 400 GeV synchrotron power supply	Jan-09	Cost spreadsheet

IIT [Kaplan]

Milestone	Date	Deliverable
Continue web support for MICE experiment	Sep-09	Inspection
Continue MTA radiation measurements with 805- and 201-MHz cavities	May-09	PAC09 paper
Document RF breakdown studies at MTA	May-09	PAC09 paper
Carry out MICE background analysis based on MTA data	Jun-09	MICE note
Continue button tests at 805 MHz	May-09	PAC09 paper
Reinstall and commission MTA radiation detectors	Apr-09	Inspection
Contribute to MICE operations	Sep-09	Inspection
Update MTA DAQ system documentation	Aug-09	NFMCC note
Participate in IDS-NF	Sep-09	IDS-NF note
Organize NuFact09 at IIT	Aug-09	Inspection
Begin beam tests in MTA (with FNAL and ANL)	Jun-09	FNAL technical note

UC-Riverside [Hanson]

Milestone	Date	Deliverable
Investigate use of wedge absorber for emittance exchange in MICE	Sep-09	NFMCC or MICE note
Participate in MICE tracker and readout system commissioning and operation	Sep-09	MICE note
Participate in muon cooling studies for IDS-NF	Sep-09	NFMCC note
Participate in MICE operations, including one or more MOM shifts	Sep-09	Inspection
Contribute to MICE documentation	Sep-09	MICE operations manual(s)
Develop and simulate Muon Collider ring layout	Sep-09	NFMCC note
Continue simulations of 6D cooling, including alternative designs and layouts	Sep-09	NFMCC note

UC-Berkeley [Wurtele]

Milestone	Date	Deliverable
Participate in NFMCC Executive Board	Sep-09	Inspection
Provide theory guidance on Muon Collider and Neutrino Factory design issues	Sep-09	Inspection