FERMILAB-TM-2390-AD

TEL Electron Gun Anode Modulator Design Proposal

G. Saewert

4/17/07

Topics

- "Official" modulator Specifications
- Design concept(s) with using multi-transformer approach
- Design approach
  - How I iterate towards a specific transformer design
  - Used results of measured parameters
- Design details
  - Drive schemes
- Results of modeling compensation for store #5162 Qv
- List transformer timing rules
- Cost estimates
- Road to construction

Original modulator specifications

- Pulse amplitude = 16 kV (or best effort)

$$I_{beam} = \rho (V_{anode})^{3/2}$$

  - For present guns ρ = 4 x 10^{-6}
  - 16 kV -> 8.0 A electron beam
  - 10 kV -> 4.0 A electron beam
  - 5.6 kV -> 1.6 A electron beam
- Every 12-bunch pulse train has a voltage/current envelope
  - Modulator voltage for each bunch is adjustable
  - Voltage envelope has acceptable constraints:

Half-sine wave

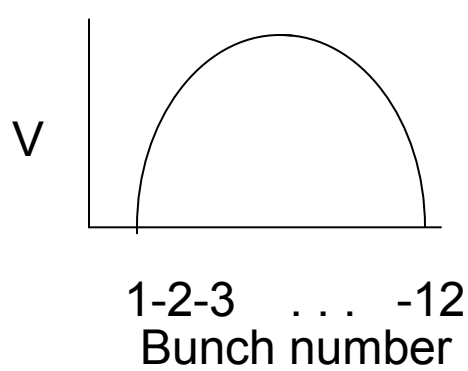

Ramp / pseudo-ramp

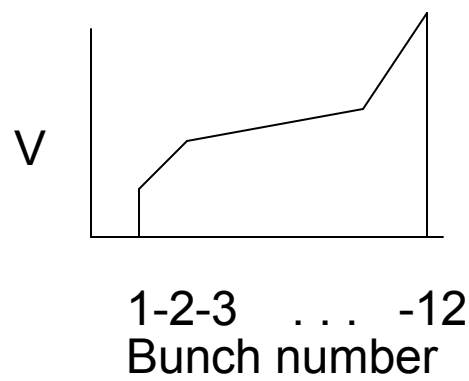

Original modulator specifications (cont.)

- Flat top stability from pulse to pulse ~.1% (low ripple)
- Pulse jitter <1 ns
  - Only need this if amplitude during beam transit time is not flat
- After-pulse <2%
- Gun anode load ~60 pF

Proposed simplified circuit topology

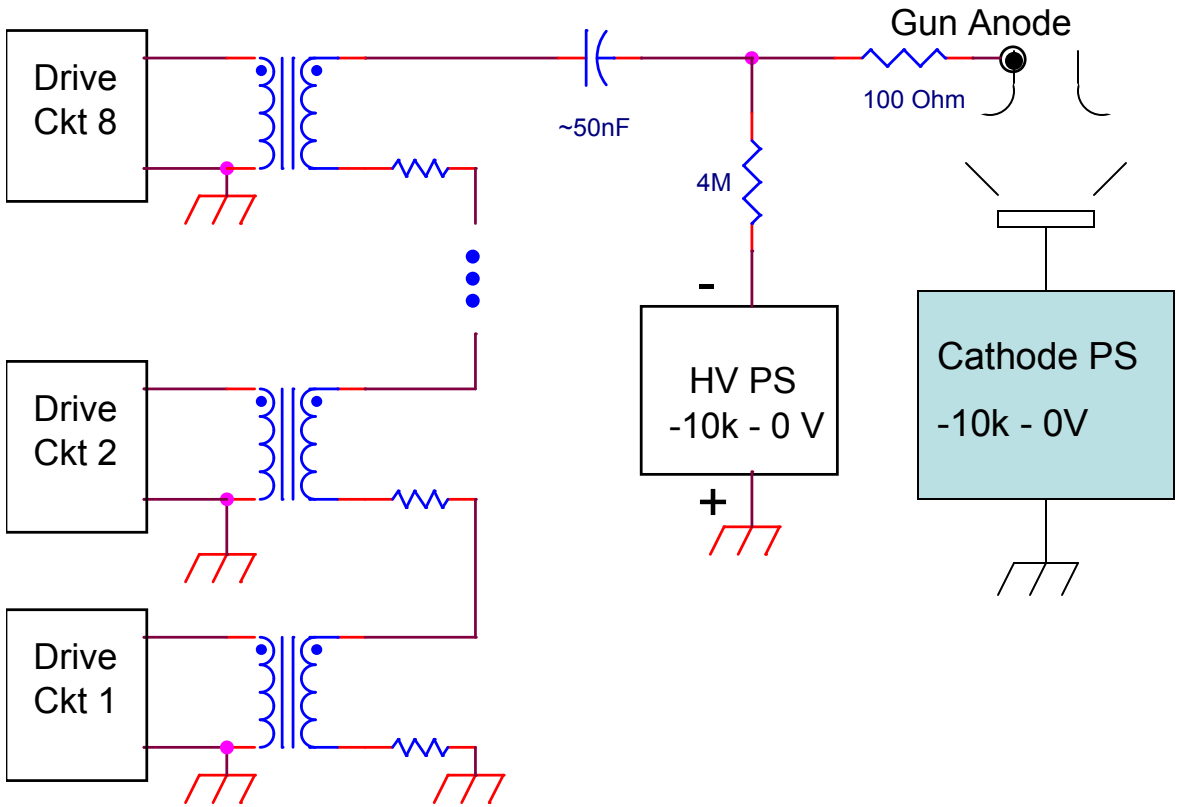

Proposed modulator concept

- Build a modulator composed of a number of pulse transformers
  - Drive all primaries individually at ground potential
  - Connect the secondaries in series to sum up output voltage
  - Each transformer is designed with an assumed Volt-sec limit
    - ✓ Volt-sec determine the maximum B field and therefore core power loss
    - ✓ Tolerable core power loss determines Bmax and not saturation limit
- Drive as many transformers at any one time as necessary
  - Switching interval is 396 ns
- Output voltage can be scalloped
  - Each transformer can be driven on and "off" numerous times in each 12-bunch train
  - The maximum Volt-sec limit determines how many times any transformer can be turned on
- Transformers can have different output voltages
  - Provides better voltage resolution
  - Proposing 800 V and 400 V secondaries
- There are two usable drive schemes
  - Unipolar –
    - ✓ DC offset voltage set to the cathode potential
    - ✓ Positive primary voltage drives the anode positive with respect to the cathode producing current
    - ✓ Negative primary voltage applied during the abort gap resets the core
  - Bipolar –
    - ✓ DC offset voltage set to a positive voltage with respect to the cathode
    - ✓ Both positive and negative primary voltages summed with the DC offset to produce a positive anode voltage
    - ✓ A net positive voltage may result during the abort gap (depending of the value of DC offset voltage chosen)

Proposed modulator concept (cont.)

- The proposed objective for a first modulator
  - 3.2 kV modulator having 5 transformers
    - ✓ (3) 800 V
    - ✓ (2) 400 V
  - Output capability is 6.4 kV (tune shift >.004), using bipolar drive scheme
- In principle, minimizing the surface area and number of components at high voltage would minimize power dissipated of parasitic capacitance.
  - Power dissipation from parasitic capacitance is:

$$Power = 1/2 \bullet CV^2 f \quad (W)$$, where f is predominantly 150 kHz

  - This circuit scheme has “only” secondary windings and secondary-side damping resistors at high voltage

Tune shift and beam current vs gun anode voltage

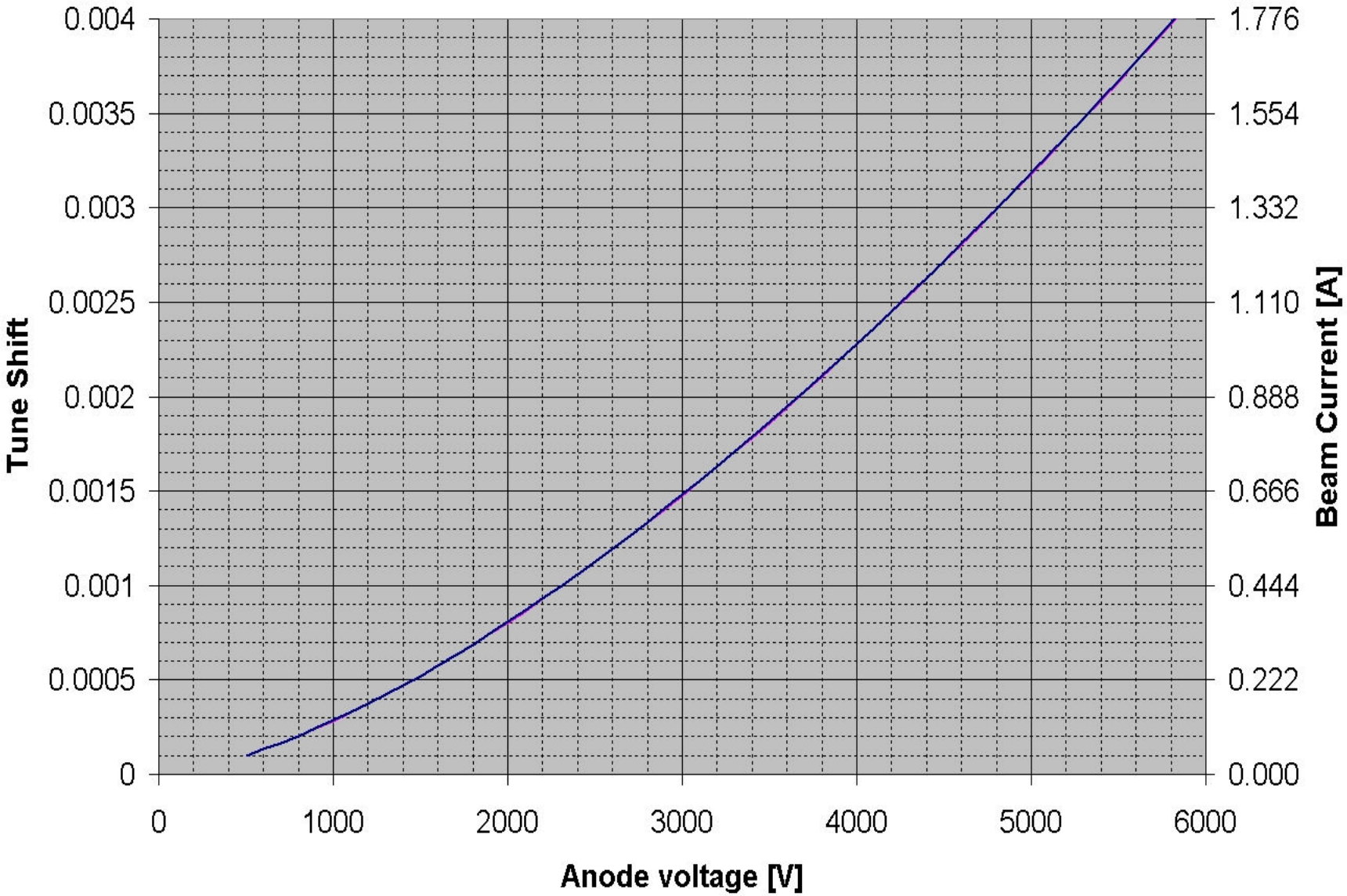

Maximizing output voltage with a transformer

- Higher output voltage is paid for with power dissipation and parasitics
  - Since we do not have to deliver any power to a load, it makes sense to choose an approach that does not require a resistive load
  - Parasitic inductance effects pulse shape/rise time
  - Parasitic capacitance effects pulse shape/rise time and power dissipation
- Increase the number of transformers
  - Output voltage increased by adding more transformers, obviously
  - Each transformer adds proportionally more parasitic L & C and thus power dissipation
- Increase turns ratio
  - Output voltage increased by adding secondary turns n_s
  - Leakage inductance goes up with n_s^2
  - Parasitic capacitance and resistor power go with n_s
- Choosing a primary voltage as high as possible
  - Increases transformer cross sectional area requirement
  - Decreases need for transformer secondary turns n_s

Maximizing output voltage (cont.)

- Choose a physically larger enough, low loss transformer core
  - The desire is to maximize transformer output voltage utilizes the expression:

$$V \bullet s = 10^{-8} n_p A_{core} B \quad (V \sec) \qquad [1]$$

  - Leakage inductance increases quickly with turns since: $L_{leak} \propto n^2 \quad (H)$
  - The limiting factor for B is power loss not core saturation at the 150 kHz rep rate, as expressed for ferrite:

$$\rho_{core} = k B^{2.5} F^{1.9} \quad (W / cm^3)$$

  - Making two substitutions:

$Vol_{core} \propto A_{core} \quad (cm^3)$, since the core length is basically constant

$B \propto 1 / A_{core} \quad (Gauss)$ from [1],

  - The factor by which cross sectional area effects core power loss:

$$P_{core} \propto 1 / A_{core}{}^{1.5} \quad (W)$$

Design approach

- Calculations & modeling
  - Obtain a reasonable arithmetic model of the transformer parameters
    - ✓ Leakage inductance reflected to the secondary
    - ✓ Stray capacitance on the secondary
    - ✓ Core's predicted power dissipation
  - Considering "official" modulator spec, choose a switching and operating parameter scheme using the multi-transformer approach
  - Modeled the circuit
    - ✓ Output response
    - ✓ Secondary side damping resistor power
    - ✓ H-bridge voltages, current and power
- Measured parameters
  - Compared calculated parasitics with measured windings on a sample core
  - Obtained a good sample core from the vendor
    - ✓ Actual core loss is ½ expected from the spec sheet

Secondary parasitics model with damping resistors

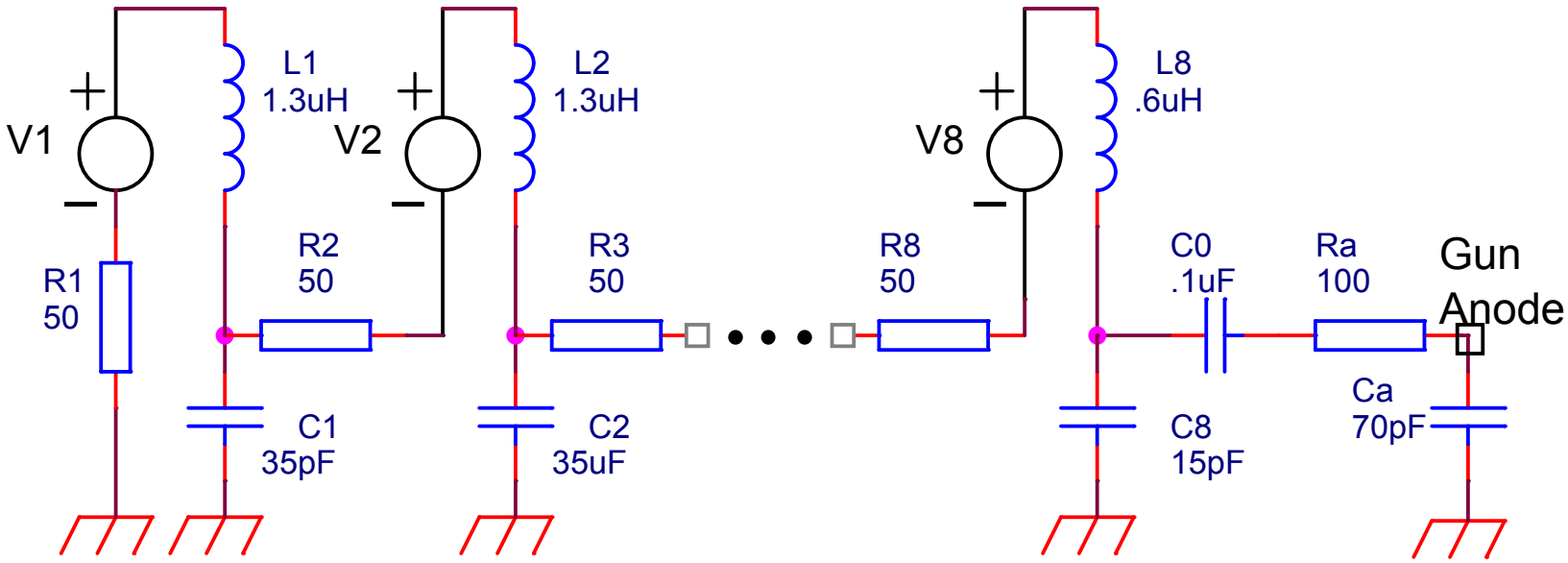

V1 – V8 : transformer secondary voltages

L1 – L8 : calculated secondary leakage inductances

C1 – C8 : calculated secondary parasitic capacitances

R1 – R8 : damping resistors. ~1 kW total compensating store #5162 Qv.

Design approach - calculations

CHOSEN PARAMETERS

$A := 2$	in^2	Rod cross sectional area. This is equivalent to flux path area.
$FrodL := 3$	in	Length of the rod.
$Frtor := .75$	in	Space between the 2 rods--the winding window height.
$\mu := 3500$		Core permeability
$\chi := 80$	mW/cm^3	Power loss per volume at 150kHz including an est. of harmonics contribution and chosen B field
$B := 1500$	G	Flux density - total pead-to-peak excersion
$Fdens := 4.8$	g/cm	Density of the material
$tw := 2.4 \cdot 10^{-6}$	sec	Pulse width, max
$np := 11$		Primary turns
$ns := 11$		Secondary turns
$S1 := .125$	in	Space between pri & sec windings. I assume this includes both wire dia's.
$Th := 2.0$	in	Sec. winding height ("stack of turns" height)
$Tsww := .06$	in	Secondary wire spacing, assuming windings are packed close together. This is a fudge factor used to estimate sec. stray capacitance.
$k := 3.4$		Primary to secondary insulation dielectric constant

Design approach – calculations (cont.)

CALCULATED PARAMETERS

Ferrite Core:

$FrodD := 2\cdot\sqrt{\frac{A}{\pi}}$	in	Diameter of the rods.	$FrodD = 1.596$
$Fctoc := Frtor + FrodD$	in	Center to center distance of the 2 rods	$Fctoc = 2.346$
$FbarW := \frac{A}{FrodD}$	in	Width of the rectangular bar.	$FbarW = 1.253$
$FbarL := 2\cdot FrodD + Frtor$	in	Length of the bars	$FbarL = 3.942$
$Vbar := FbarL\cdot FbarW\cdot FrodD$	in^3	Bar volume--one.	$Vbar = 7.883$
$Vrod := A\cdot FrodL$	in^3	Volume of the rod--one	$Vrod = 6$
$lc := 2\cdot[(FrodL + FbarW) + Fctoc]$	in	Flux mean path length in the core	$lc = 13.198$
$lccm := lc\cdot 2.54$			$lccm = 33.523$
$Acm := A\cdot 2.54^2$	cm^2	Flux cross sectional area	$Acm = 12.903$
$Fvol := 2\cdot(Vbar + Vrod)$	in^3	Core volume	$Fvol = 27.766$
$Fvolcm := Fvol\cdot 2.54^3$	cm^3	Volume in cm units	$Fvolcm = 455.006$
$Fw := Fvolcm\cdot Fdens$	grams	Weight of one ferrite squaroid	$Fw = 2.184\times 10^3$
			$Fw\cdot .002204623 = 4.815$ lbs
$Q := Fvolcm\cdot\chi\cdot .001$	W	Power dissipated in each core	$Q = 36.4$

Design approach – calculations (cont.)

Windings:

$Tl := 2\cdot(FrodD\cdot .5 + .07 + .04 + S1)\cdot\pi$ in — Sec. winding turn length — $Tl = 6.49$

Inductance:

$le := \frac{lccm}{\mu}$ cm — Effective mean flux path length — $le = 9.5781\times 10^{-3}$

$Lpri := \frac{1.25\cdot 10^{-8}\cdot np^2\cdot Acm}{le}$ H — Primary inductance — $Lpri = 2.0376\times 10^{-3}$

$Ipri := \frac{np\cdot Acm\cdot B\cdot 10^{-8}}{Lpri}$ Amps — Primary current to achieve B from volt-seconds value. — $Ipri = 1.045$

$Vpri := Lpri\cdot\frac{Ipri}{tw}$ V — Primary voltage to reach B at cooresponding primary current — $Vpri = 887.095$

$Vsec := Vpri\cdot\frac{ns}{np}$ V — Secondary voltage — $Vsec = 887.095$

$Lsl := \frac{.032\cdot ns^2\cdot Tl}{Th}\cdot S1$ μH — Sec. leakage inductance — $Lsl = 1.571$ μH

$Cd := \frac{.225\cdot k\cdot Tl\cdot ns\cdot Tsww}{S1}\cdot\frac{1}{3}\cdot\left[\left(\frac{ns}{np}\right)^2 + \frac{ns}{np} + 1\right]$ pF — Stray capacitance, sec to ground. — $Cd = 26.214$ pF

$Ppri := .5\cdot Lpri\cdot\left(\frac{800\cdot tw}{Lpri}\right)^2\cdot 1.45\cdot 10^5$ — $Ppri = 131.168$

$Vout := \frac{ns}{np}\cdot 800$ — $Vout = 800$

Design approach - calculations (cont.)

Operating Conditions:

$P_fudge := .5$

$Vin := 800$

$Bop := \frac{Vintw}{10^{-8} \cdot np \cdot A \cdot 2.54^{2}}$ $\qquad Bop = 1.353 \times 10^{3}$

$P_dens := 590 \cdot 10^{-18} \cdot Bop^{2.5} \cdot \left(150 \cdot 10^{3}\right)^{1.9}$ mW/cc $\qquad P_dens = 271.302$

$Ptotal := P_dens \cdot Fvolcm \cdot 10^{-3} \cdot P_fudge$ $\qquad Ptotal = 61.722$

Proposed design details

- Design for 3200 V maximum output with 5 transformers
  - 3 have 800 V secondaries
  - 2 have 400 V secondaries
  - Resolution tune shift with 400V: .00017 @ 1 kV and .000375 @ 5 kV
- The transformers
  - Material: Ceramic Magnetics ferrite type MN8CX
  - Core area = 2.0 sq. in.; bar and rod design
  - All have the same voltage primaries, designed for up to 800 V
  - 11 turn primary and 11 turn secondaries for the 800 V transformers
  - 11 turn primary and 6 turn secondaries for the 400 V transformers
  - Multi-layer tubes of .003” thick #410 Nomex
    - ✓ Primary wound on a .024” thick Nomex tube (8 layers of Nomex)
    - ✓ Secondary wound on a .10” tube
      - ➢ Made of 3 tubes slid inside each other
      - ➢ Potted

Proposed design details (cont.)

- Secondary resistors
  - Each transformer damping resistor needs to be about 50 Ohms
  - Anode damping resistor is 100 Ohms
  - #5162 Qv compensation example:

    Unipolar drive scheme, modulator designed for 5.6 kV

    8 transformers: (6) 800 V, (2) 400 V

    ~1 kW total (unipolar drive scheme),

    R1 ~130 W

    R8 ~80 W
- Drive circuit designed to be switched in either or two “schemes”
  - Unipolar drive scheme is an H-bridge having 3 switching phases
  - Bipolar drive scheme is a modified H-bridge having 4 switching phases

Unipolar drive scheme H-bridge drive circuit

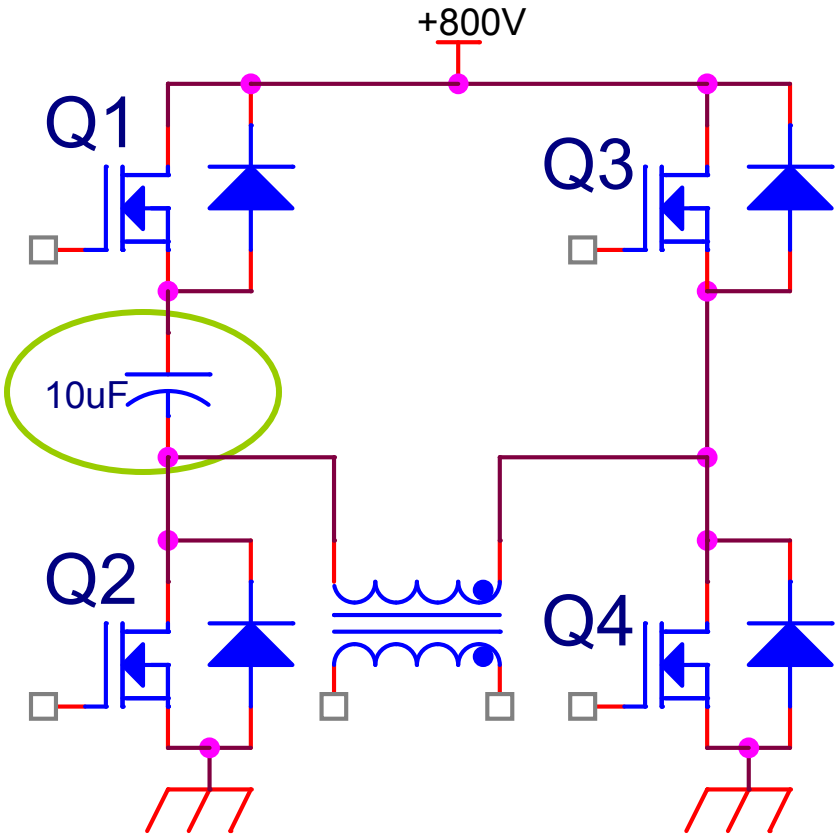

Unipolar H-bridge drive scheme

H-bridge
Switching Phases

1. **Apply voltage**
2. **Idle (or "off")**
3. **Reset the core**

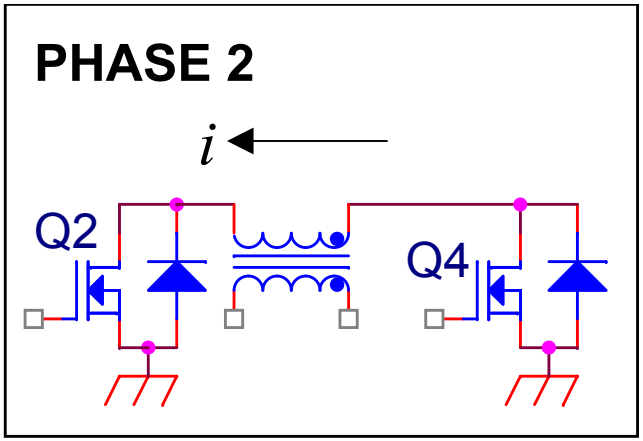

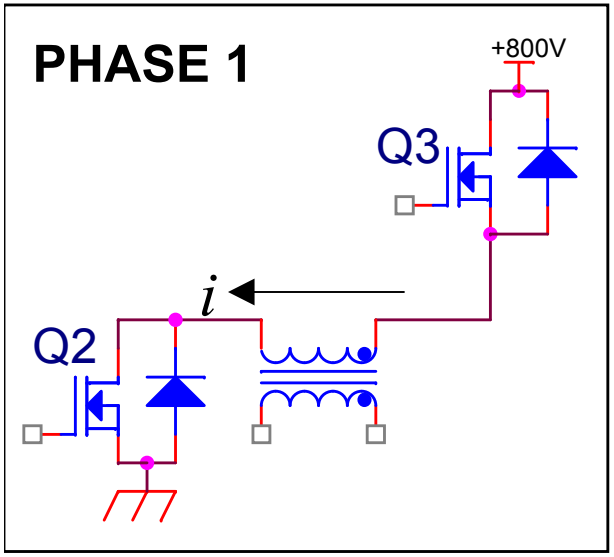

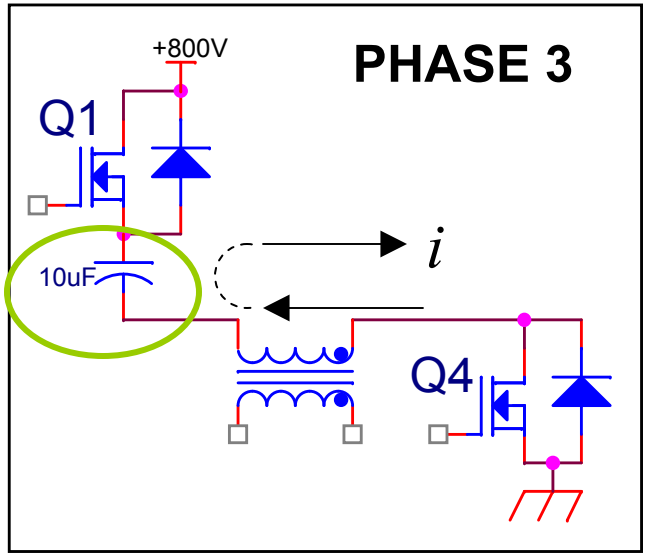

Only those trasistors conducting are displayed

Tunes 4 hrs into store #5162

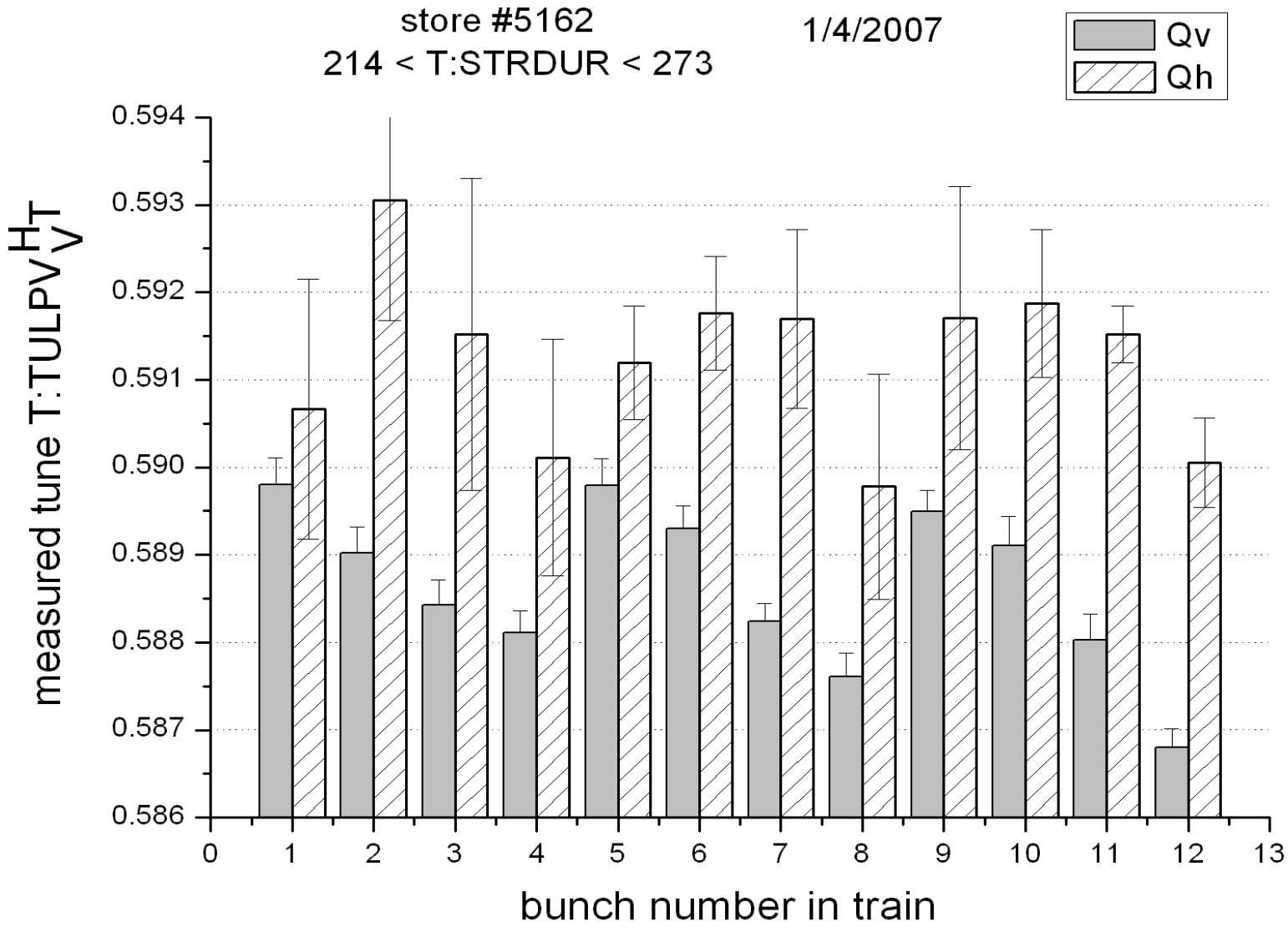

Volt-seconds budget- store #5162 Qv

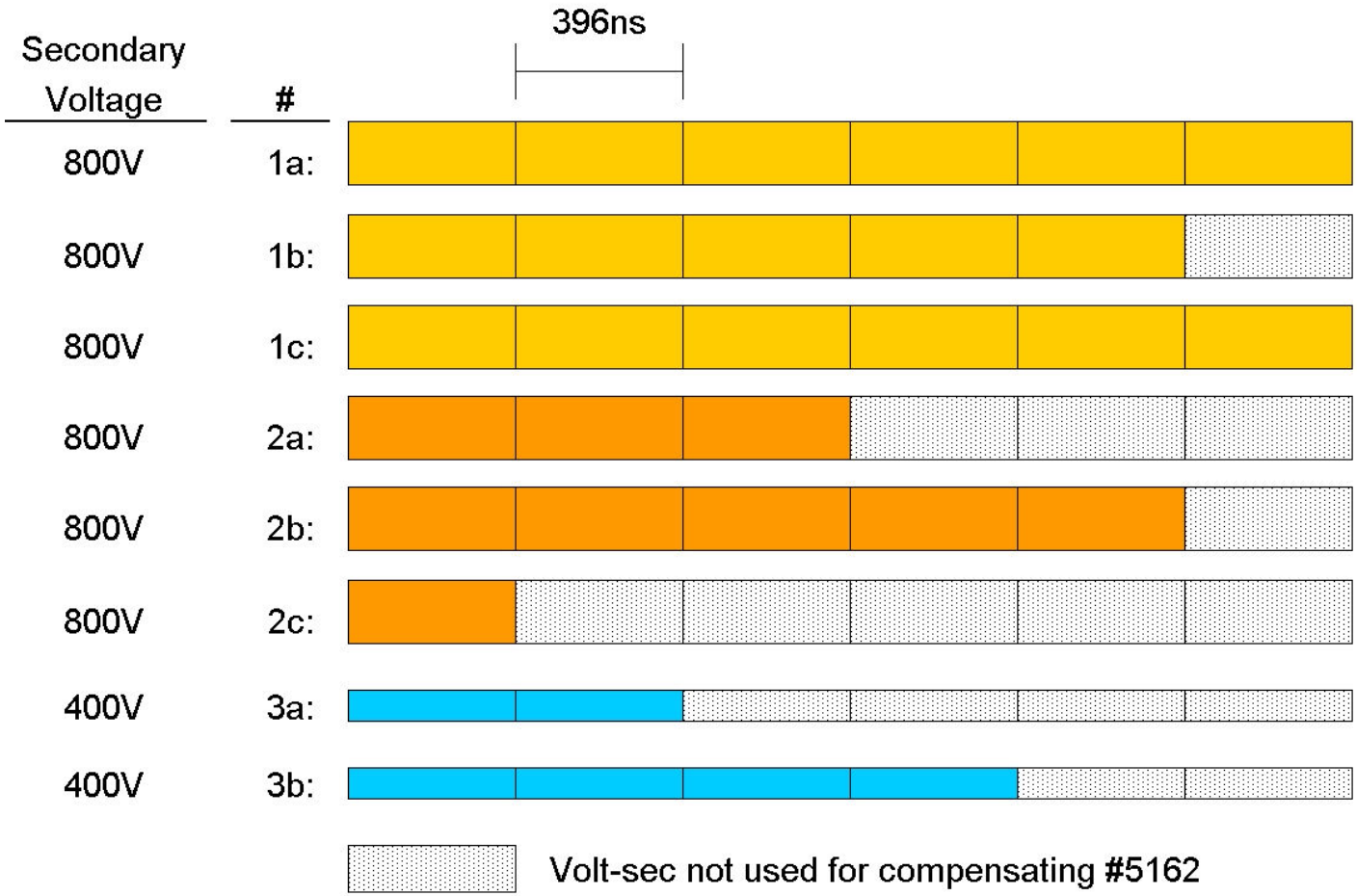

Total Volt-sec available: 13.4 mVsec

Used for compensating #5162: 10.4 mVsec

Pulse train voltage envelope - store #5162 Qv

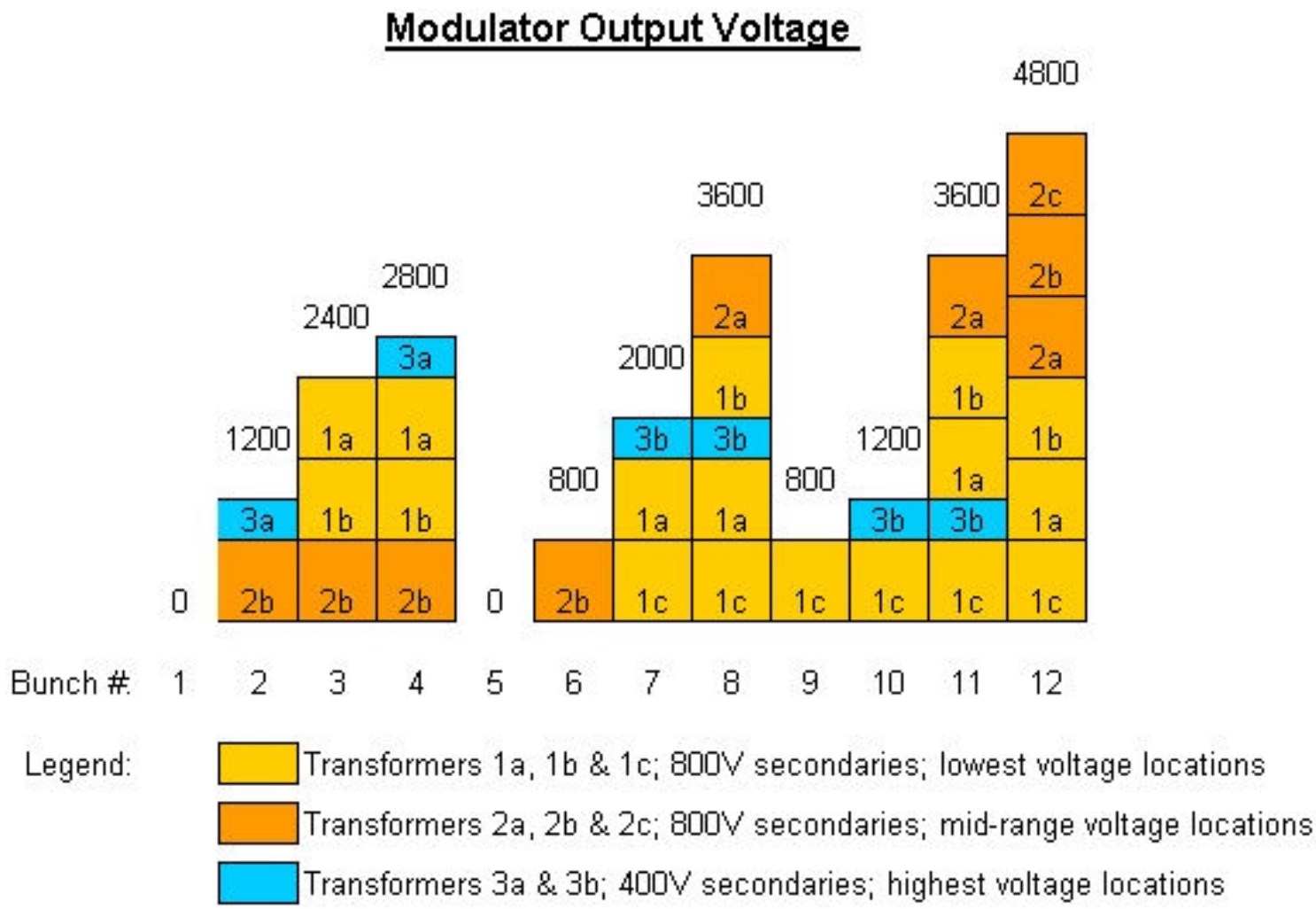

All transformer primaries are wound for the same volt-seconds having a maximum of 2.4us on-time.

Modulator output waveform for store #5162 Qv

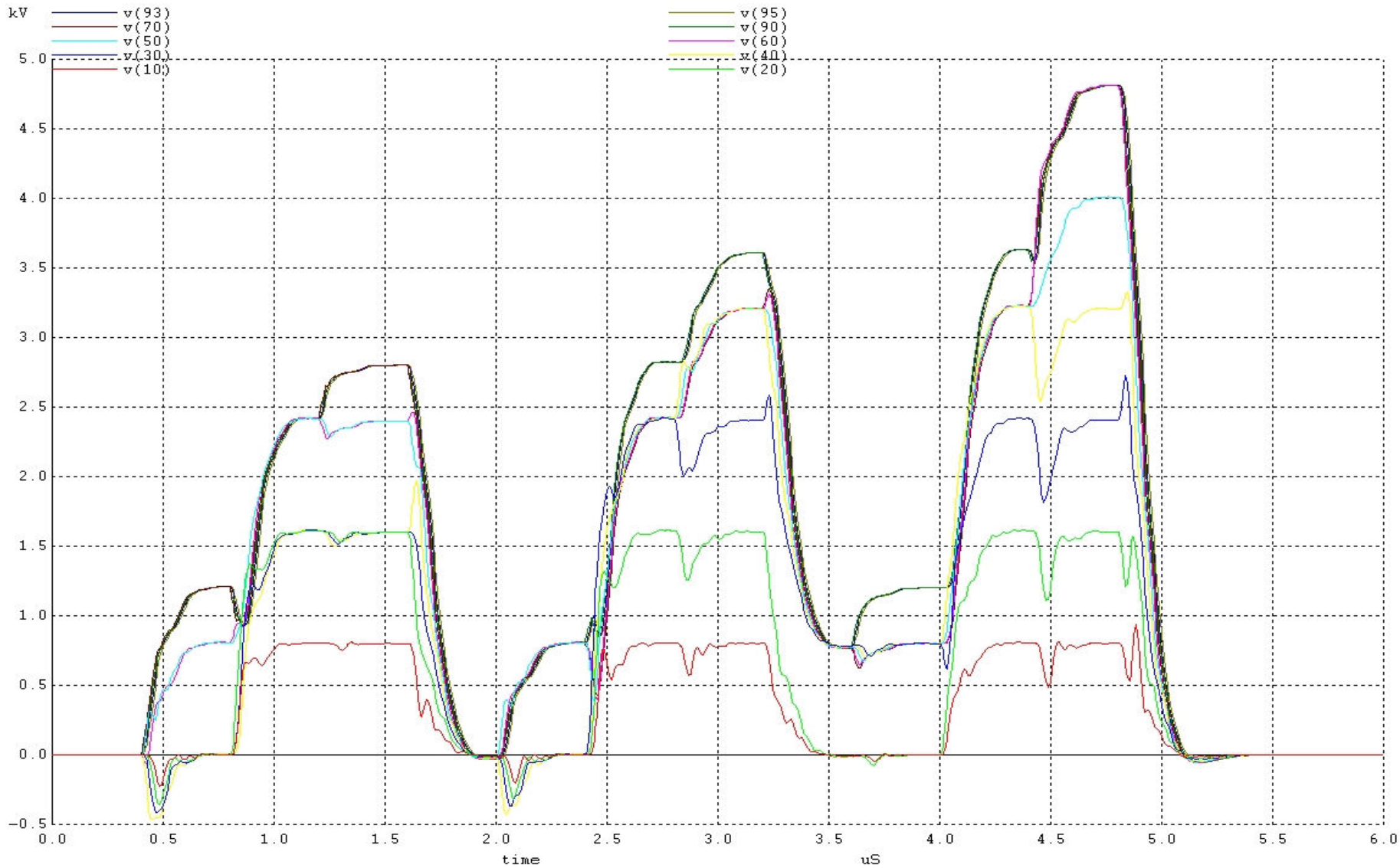

Output including core reset (at 1800 μs) - store #5162 Qv

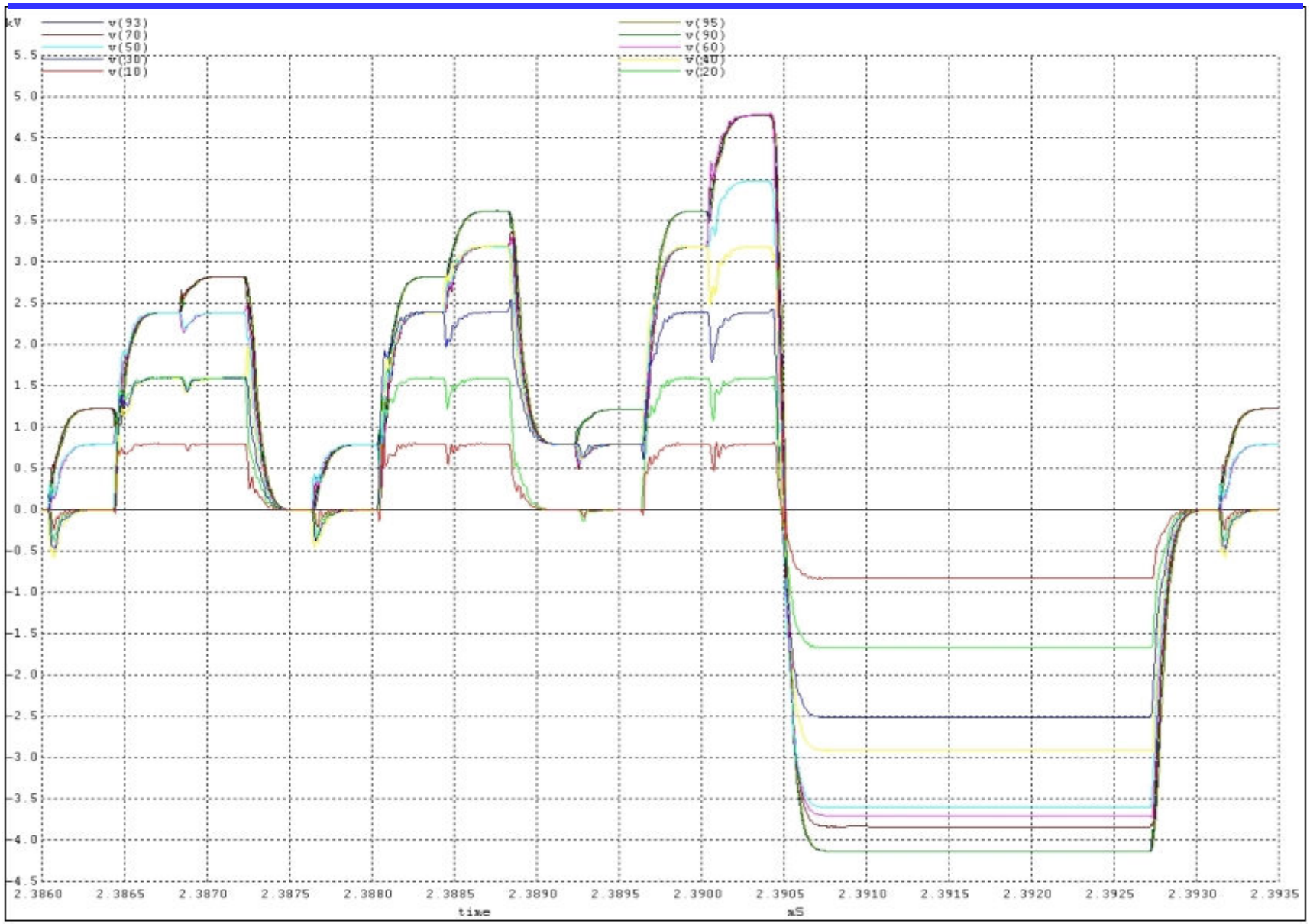

Secondary series resistor currents - store #5162 Qv

Total resistor power dissipation = 969 Watts

Secondary resistor currents - store #5162 Qv

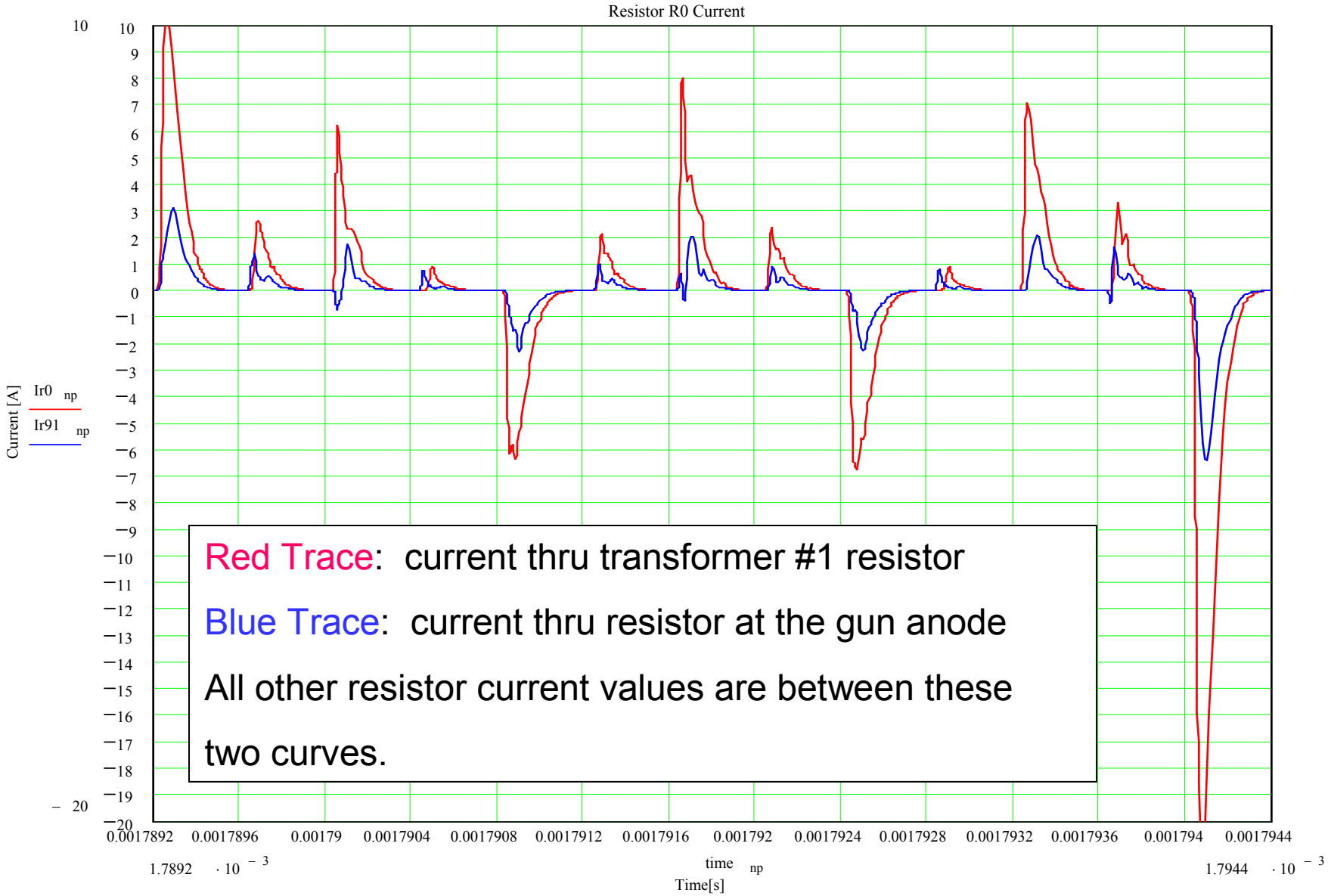

Red Trace: current thru transformer #1 resistor

Blue Trace: current thru resistor at the gun anode

All other resistor current values are between these two curves.

H-bridge currents - store #5162 Qv

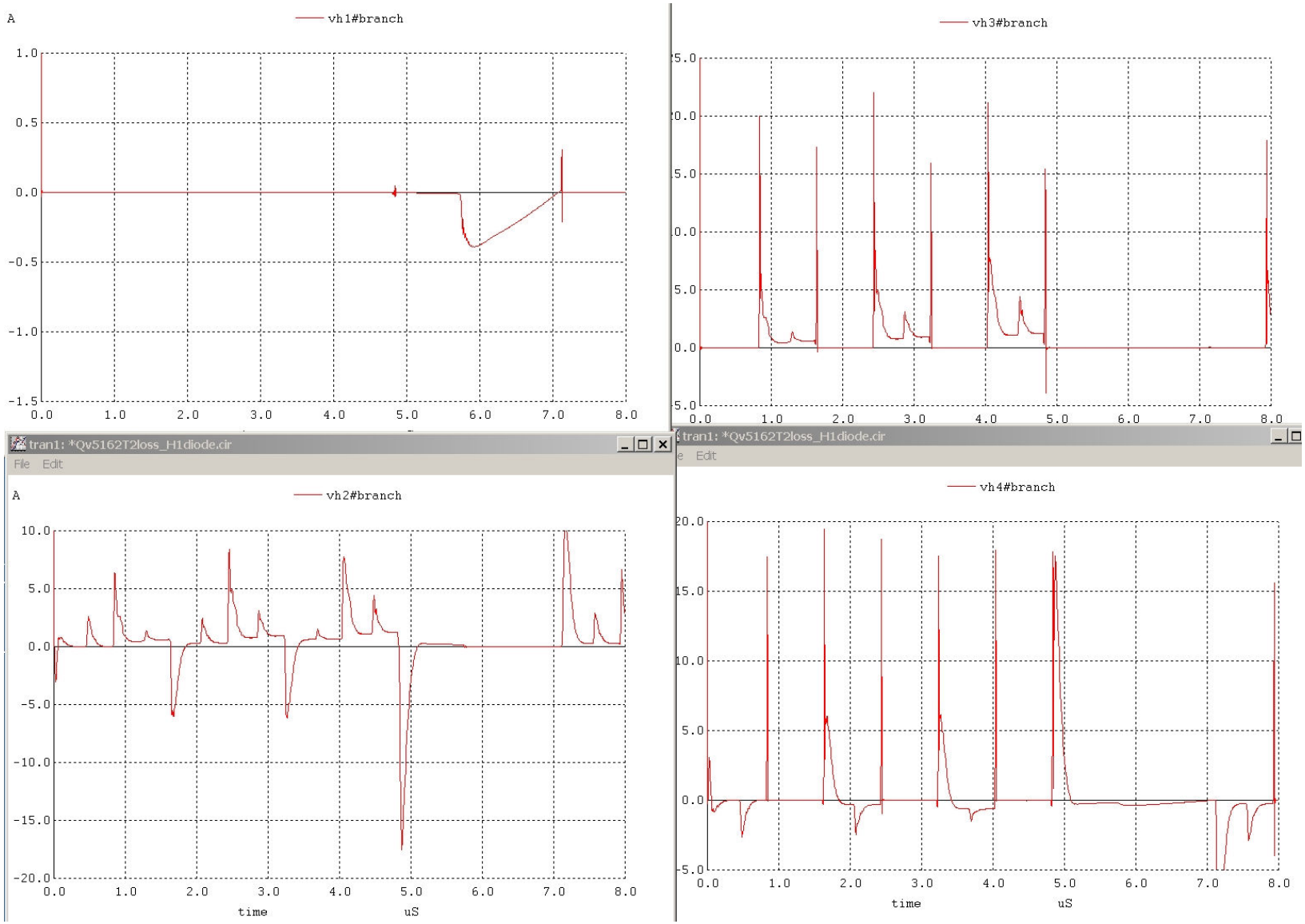

Transformer #1 H-bridge currents - store #5162 Qv

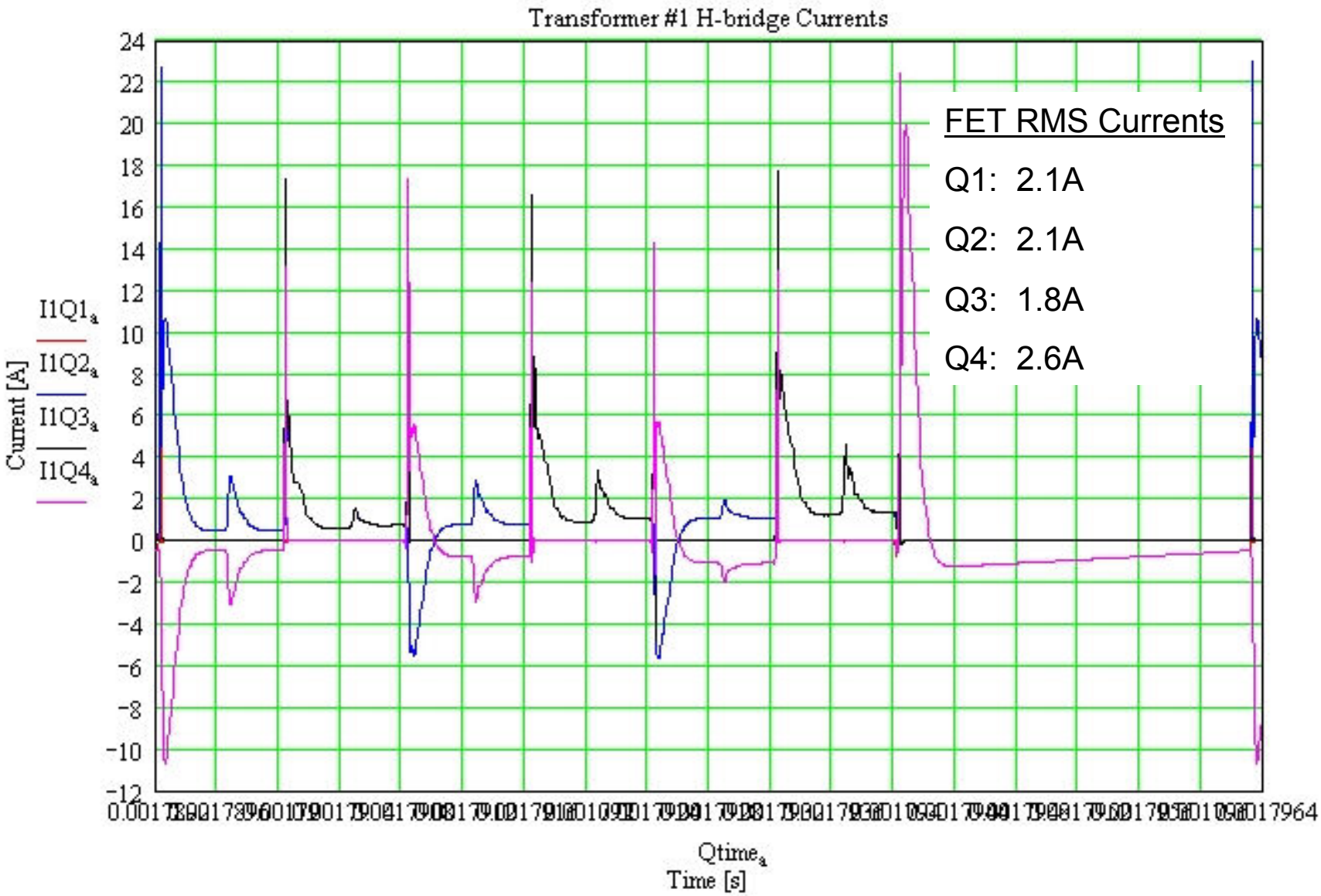

Bipolar drive scheme modified H-bridge drive circuit

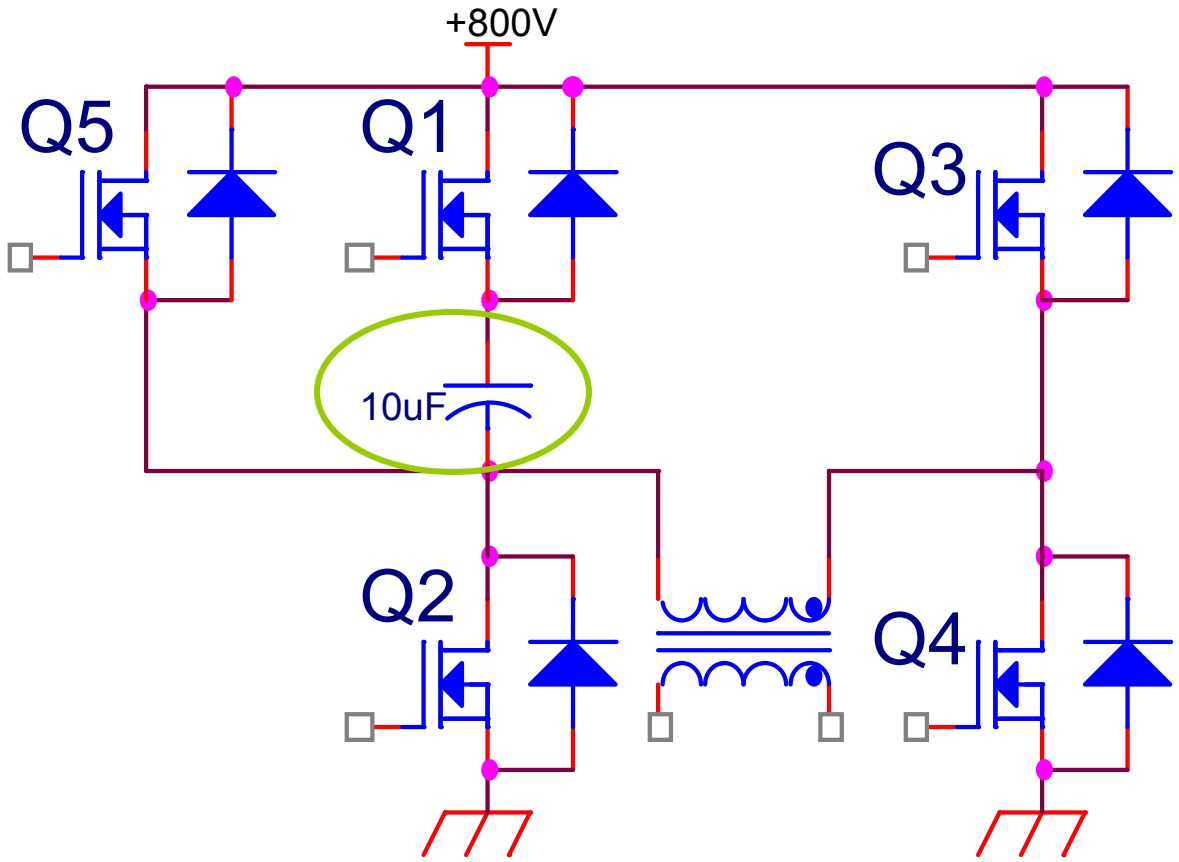

Bipolar H-bridge drive scheme

Modified H-bridge
Switching Phases

1 **Apply +voltage**
2 **Apply -voltage**
3 **Idle (or "off")**
4 **Reset the core**

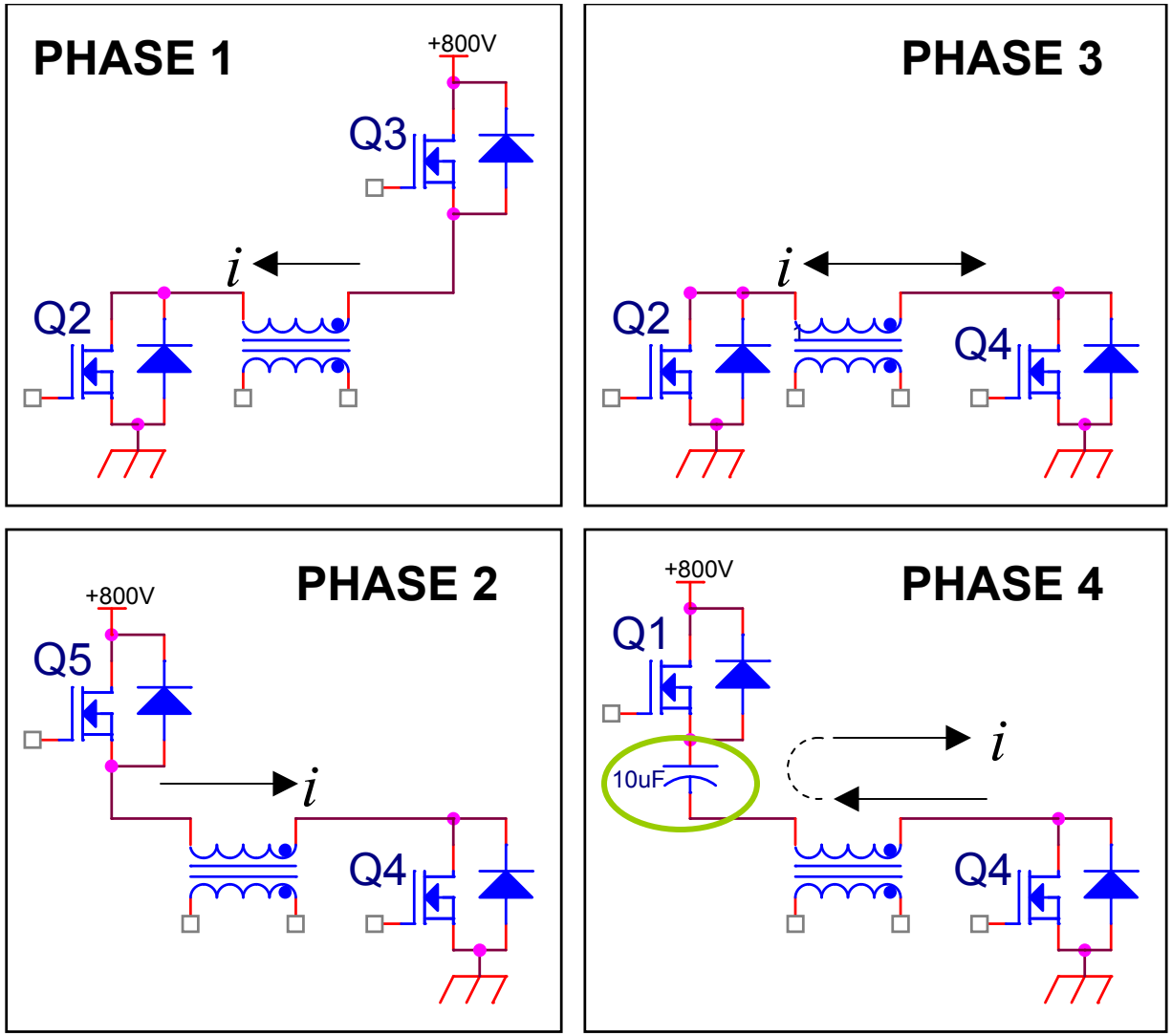

Only those trasistors conducting are displayed

Timing rules for bunch compensation

The following rules apply when choosing the timing for constructing each 12-bunch train voltage envelope:

Given: Every transformer will have applied to it a core reset during every abort gap to guarantee the core maintains a net zero flux.

1. Never initiate the abort gap core reset with a net negative flux bias on the core.
2. Every transformer must be driven positive for at least one bucket.
3. A transformer must be driven positive for one bucket more than it is driven negative.

Cost estimate

Part	(1) 3.2 kV Modulator + spare parts		(2) 5.6 kV Modulators + (2) spares	
Modulator chassis				
core material	(8)	$3640	(32)	$12,200
insulators	(8)	$3100	(40)	$79000
chassis materials	(8)	$1700	(32)	$6800
machining	(8)	$2640	(32)	$10,560
driver PCBs	(8)	$1600	(32)	$6400
power resistors + fans	(8)	$900	(32)	$3600
Control boards	(2)	$400	(8)	$1600
High voltage PS, 2.5 kW	(1)	$4500	(2)	$9000
Anode Offset HV PS, 30 W	(1)	$700	(2)	$700
Total		$19,180		$59,460

Development plan

- Verify the primary drive circuit scheme
- Order parts
- Finish mechanical drawings & order machine work
- Build a 5-transformer modulator intending to drive it the bipolar
  - 5 transformers
    - (3) 800 V + (2) 400 V = 3200 V single polarity (if driven unipolar)
    - 3200 V single polarity delivers up to 6400 V to the anode driven bipolar
  - Test the insulation dielectric strength
    - Won't know real dielectric stress until we run a modulator at voltage
    - 3200 V is the most voltage I want to apply across .100" insulator – test this
  - Buy a bunch of 2 Watt secondary damping resistors
    - Tuning is done by series-paralleling
    - With a variety of different values we can easily fine tune the response
- While waiting for longer lead time parts
  - Develop the timing circuit
  - Lay out PCBs
  - Pot the multi-tube insulators
  - Model this circuit design