Fermi National Accelerator Laboratory

FERMILAB-TM-2085

Main Injector LCW (Low Conductivity Water) Control System

K.C. Seino

Fermi National Accelerator Laboratory
P.O. Box 500, Batavia, Illinois 60510

June 1999

Operated by Universities Research Association Inc. under Contract No. DE-AC02-76CH03000 with the United States Department of Energy

Disclaimer

This report was prepared as an account of work sponsored by an agency of the United States Government. Neither the United States Government nor any agency thereof, nor any of their employees, makes any warranty, expressed or implied, or assumes any legal liability or responsibility for the accuracy, completeness, or usefulness of any information, apparatus, product, or process disclosed, or represents that its use would not infringe privately owned rights. Reference herein to any specific commercial product, process, or service by trade name, trademark, manufacturer, or otherwise, does not necessarily constitute or imply its endorsement, recommendation, or favoring by the United States Government or any agency thereof. The views and opinions of authors expressed herein do not necessarily state or reflect those of the United States Government or any agency thereof.

Distribution

Approved for public release; further dissemination unlimited.

Copyright Notification

This manuscript has been authored by Universities Research Association, Inc. under contract No. DE-AC02-76CHO3000 with the U.S. Department of Energy. The United States Government and the publisher, by accepting the article for publication, acknowledges that the United States Government retains a nonexclusive, paid-up, irrevocable, worldwide license to publish or reproduce the published form of this manuscript, or allow others to do so, for United States Government Purposes.

GnVw: 2/ 5/99
Rev. 2/25/99

Main Injector LCW (Low Conductivity Water) Control System

By K. C. Seino

1. Introduction

There are six service buildings (MI-10, 20, 30, 40, 50 and 60) uniformly spaced along the perimeter of the MI (Main Injector). Each building supplies power and cooling water to 1,815 feet of circumference in the MI. A total of 18 LCW pumps were installed around the ring with 3 pumps per building. Each pump has a 100hp motor and delivers 550 GPM of LCW. Approximately 8,000 GPM of LCW is required to cool magnets, bus and power supplies in the MI enclosure and service buildings. The 18 centrifugal pumps are capable of delivering approximately 9.900 GPM of LCW. At each service building, the temperature of LCW is regulated to 95 +/-1 degF by a 3-way control valve which diverts a portion of LCW around a heat exchanger when less cooling is required. A constant flow of pond water is circulated in the tube side of the heat exchanger to remove the heat.

In each service building, an LCW control system controls pumps and valves, and it monitors pressures, flows, resistivities and temperatures. The control system also communicates with other buildings including MCR (Main Control Room) via an Ethernet link and front-end computers.

In the MI-60 service building, the magnet LCW control system controls/monitors a 3,000 gallon storage/expansion tank in addition to what's done in the other service buildings. In MI-60, there are two additional LCW control systems for 95 degF RF and RF Cavities.

In MI-40, there is an LCW control subsystem, which is attached to the MI-40 main system, and which controls/monitors the Beam Dump cooling system. In MI-52, there is an LCW control system for 150 Gev Proton Line.

In CUB (Central Utility Building), there are two control systems (US Filter and Fermilab). The US Filter system controls the regeneration of DI (Deionization) columns, and the Fermilab system manipulates valves to fill the Tev (Tevatron) and MI rings with good LCW. For further details on the CUB control systems, one should refer to Ref. [3].

2. Hardware

2.1 PLC

The PLC hardware system consists of a Gateway module (local controller/remote communicator) and a variety of I/O modules. The product line of these modules is called as Sixtrak and is made by Sixnet of Clifton Park, NY. The Gateway module can be connected up to 20 I/O modules without expander modules, and it can be connected up to 128 I/O modules with expanders. The Gateway scans I/O modules and updates the information on them under a program control, and it communicates with host computers via an Ethernet link. The Gateway has 1 Mbytes of flash memory (for firmware), 256 Kb of battery backed RAM (for data), a real time clock and a RS232 serial port for local diagnostics.

For our applications, we are using several different types of I/O modules. They are analog input modules (4-20ma input, instrumentation and RTD), analog output modules, digital input modules (5VDC and 24VDC) and digital output modules (relay). The main

features of the I/O modules are as follows.

(1) 16 Current Inputs (ST-AI-20M-16H): 16 channels, 4-20mA inputs, 12-bit resolution, 100 ohm input impedance, used with the current limiters in (2).
(2) 16 Current Limiters (ST-CL-20M-16H): 16 outputs, 40mA max. short circuit output current.
(3) Instrumentation Inputs (ST-AI-INS-08U): 8 channels, differential inputs, 4-20mA, 16-bit resolution, 100 ohm input impedance.
(4) 6 RTD Inputs (ST-AI-RTD-06U): 6 channels, 100 ohm platinum RTD, 2-4 wires, 16-bit resolution.
(5) 8 Current Outputs (ST-AO-20M-08F): 8 channels, 4-20mA outputs, 13-bit resolution, 0-750 ohm load allowed at 24VDC.
(6) 8 Digital Inputs (ST-DI-024-08F): 8 bits, 24VDC inputs, 2.2k ohm input resistance, 10mA nominal input current, 500V isolation.
(7) 6 Form-C Relays (ST-DO-RLY-06U): 6 bits, Form-C outputs, 0-140VDC, 0.1mA-2A, 6 ms relay turn on/off times.

The modules are DIN rail mountable for instantaneous installations, and they can be removed from their wiring bases for easy installation and maintenance. Moreover, every module is isolated from a common bus and other modules for fault-free operations.

2.2 Instrumentation

The sensors, transmitters, local indicators, actuators and other field devices had been specified, purchased and installed by the Mechanical Support group. However, we did cabling/wiring, set key parameters, calibrated, did some adjustments and did trouble-shooting on these field devices. For this reason, I will briefly make reference to their main features as follows.

(1) Pressure Transducers (Measurement Specialties MSP-400-P-0064A): 17-4PH stainless steel body, 0-400 psig +/-1%, 10-30VDC, 4-20mA, two wire output, reverse polarity/short circuit protection.
(2) Flow Transmitters (Peek Measurement 2120R): 0-3120 rpm (0-52 Hz input), 0-100 GPM with 1.5"ID pipe, +/-0.2% accuracy, 4-20mA output, 8-30VDC required, 115VAC power adapter.
(3) Differential Pressure Transmitters (Rosemount 2024): Differential pressure is converted to flow rate by square root function, 4-20mA output, 12-36VDC power, span and zero adjustments, +/-0.25 accuracy, 1/2 NPT conduit connection.
(4) Loop Powered Indicators (Ronan X54-202/SR): 4-20mA input, reverse polarity diode, 4-1/2 digit LCD, +/-0.3% accuracy, 5.5V voltage drop.
(5) Liquid Level Indicators (Gems SureSite 86158): Low temperature (300 degF) transmitter, length = 21"-240", 4-20mA output, 10-40VDC input, +/-1% accuracy, junction box termination, 115VAC power supply module.
(6) Resistivity Meters (Thornton 200CR): 115VAC power input, 0.0013-50 Mohm-cm with 0.1 constant cell, +/-0.5% accuracy, two SPDT relay outputs, two analog outputs (4-20mA), automatic temperature compensation, package includes instrument (Part# 6222-1), two sensors (Part# 240-202) and patch cords (Part# 1050-66).
(7) RTD Probes (Devar #RTDSF2.5): 1/4" sheath probe, stainless steel construction, 100 ohm Platinum, 0.00385 ohms/degC, 0.1% accuracy, 3 wires, aluminum Nema 4 head with 1/2" NPT conduit connection.
(8) Electric Valve Actuators (Keystone EPI-13): 1/4 turn (close/open), 100 ft-lbs break away torque, 50,000 operation life, 25W heater, 3/4" NPT conduit entry, 120VAC power, 24VDC control, declutchable hand wheel, protection by torque switches and motor

thermostat.
(9) Electric Valve Actuators for Temperature Regulation (EIM 2000 M2CP): 1/4 turn (continuous), 3 phase 460VAC power, integral circuit breaker, 4-20mA control input, 4-20mA position indicating output, Local/Off/Remote switch, Close/Open/Stop push-buttons, capable of 600 starts per hour, protection by torque and thermo switches, space heater for preventing condensation.
(10) Controller for (9) (Powers 535): PID control, 0.1-999% proportional band, 1-3600 sec/repeat integral, 0-600 sec derivative, self tuning of PID values, process variable input types (TC, RTD, voltage or current), 4-20mA control output, 4-20mA process variable retransmission output, 15VA power at 120VAC, battery backed memory retains programming information for 10 years.

2.3 Cables

The cables were pulled in MI<10:50>, 52 & 60 in 10/97 and 11/97. Since then, we had spent about ten months on an inconstant basis to terminate the cables, doing tests and fixing problems on the cables, the instrumentation and the PLC hardware for a total of nine systems excluding one for CUB.

We used several different types of cables -- (a) Belden #8761 for general use, (b) Belden #8719 for high voltage, (c) Belden #9533 for RTD, (d) Belden #9886 for 450 FT travel from MI-40 service building to Beam Dump, (e) Belden #8760 for Beam Dump, (f) Omega KK-J-20 for Type-J TCs (thermocouples) and (g) Omega KK-K-20 for Type-K TCs.

3. Software

3.1 Sixnet Plant Floor

Plant Floor is a configuration and maintenance tool for Sixtrak I/O systems. Using Plant Floor's windows and menus, one assembles a graphic representation of each I/O system. Configuration choices let him customize each module in a given system. Once a system configuration is complete, the configuration is downloaded to the Gateway module of the system. Plant Floor is also a calibration tool for analog I/O modules, and it provides real-time displays for the maintenance and diagnostics on I/O modules.

An example configuration (ts7.6pj) is shown in Fig. 3.1 (panel layout) and Fig. 3.2 (module list).

3.2 ISaGRAF

ISaGRAF is a comprehensive control programming environment that makes Sixtrak I/O a high performance, yet inexpensive controller. ISaGRAF uses standard industrial PLC programming methodologies for designing powerful applications without the need of high level computer languages. ISaGRAF is created by CJ International of Seyssins, France, and it is sold by Sixnet as a part of the Sixnet software package.

An ISaGRAF project is a collection of individual programs and functions that form a complete control application. Each program controls one particular part of the application. In February 1993, responding to the need for standards to reduce training costs and guarantee portability, the IEC issued the IEC 1131-3 standard: a specification of five PLC languages that can be mixed in the same application. The five languages are (a) Sequential Function Chart (SFC), (b) Function Block Diagram (FBD), (c) Ladder Diagram (LD), (d) Structured Text (ST) and (e) Instruction List (IL).

An ISaGRAF project consists of programs, sub-programs and functions, which are placed in four different sections as follows.
(1) Beginning: Programs in this section are systematically executed in the beginning of a

cycle after updating external inputs and outputs.
(2) Sequential: Programs in this section are executed confirming to the SFC rules and the implementation on a series of steps and transitions.
(3) End: Programs are executed at the end of a cycle just before updating external outputs.
(4) Functions: Sub-programs which can be called by programs in any of the other three sections.

The ISaGRAF dictionary is simply the collection of internal, input and output variables and defines that are used in the programs of a project. Variables and defines are specified as Local (specific to one program), Global (in any program within a project) or Common (in any project in ISaGRAF), when they are created in the dictionary. The Sixtags utility (a shared tag database): The I/O and module tag names that are created in the Plant Floor configuration can be exported to the dictionary of an ISaGRAF project by the Export command of Sixtags.

The ISaGRAF I/O simulator can be run by clicking on Simulate in the Debugger menu. The simulator allows us to try out a program before it is run on a live system. This convenient tool saves time by discovering problems and fixing them before a real start-up. I/O variables can be locked (disconnected) from their corresponding external devices. Once they are locked, their status/values can be altered by the debugger to proceed with the simulation.

An example (is7D) of ISaGRAF project is shown in Figures 3.3 and 3.4. As shown in Fig. 3.3, the project consists of 9 programs and 3 sub-programs. In the Begin section, there are Updt1 (Update #1), SLPmp (Select Pump), TDRly1 (Time Delay Relay #1), TrpLt1 (Trip Latch #1), PWcnt1 (Pond Water pump control #1) and PrsCK (Pressure Check). In the Sequential section, RunS<01:03> (Run Motor Starter<01:03>) and SPonS<01:03> (Sub-program on S<01:03>).

In Fig. 3.4, one of the Sequential programs (RunS01) is shown. GS1 (Step-1) is the Initialized state; GT3 (Transition-3) where the program waits for an S01 Run command from the console; GT5 where it is delayed 5 sec; GS6 where it turns on S01 and starts TDR1 (Time Delay Relay #1); GT8 where it waits for TDR1, during whose delay time, the water system is allowed to settle down; GS9 where S01 stays on unless a trip occurs, or unless the operator stops S01, or he resets the program; the other steps and transitions are described elsewhere (Ref.s [4], [5], [6] & [7]).

For further details on ISaGRAF, one should refer to Ref. [1].

3.3 Interlocks/Trips

A number of analog and digital signals are examined on the LCW control systems, and if certain conditions exist, the programs use them to interlock the pump/valve operations. For each of the above analog signals, upper and lower trip limits are specified, and if the signal exceeds these limits, the program interlocks the related devices.

At two times (Start-up and Run times), conditions are tested. At the start-up time, if certain conditions exist, the LCW pumps can not be turned on by the console command, and the trips are set true. In this situation, the operator firstly removes the conditions and clears the trips. Secondly he sends the second command from the console to turn on the LCW pumps, because the first command has been cleared when the trips occurred.

During the run time, if certain conditions occur, the LCW pumps are turned off, and the trips are set true. In this situation, the operator follows the same procedure mentioned above.

There are two special rules to observe during the run time. One is 'Initial 15 sec Delay'. For 15 sec after the start-up, some conditions are ignored for tripping. The other is

'15 sec Filtering'. Signals are sampled at a certain rate. If the conditions exist when sampled, the occurrences are counted. If the counts exceed their specified limits over the 15 sec periods, the LCW pumps are tripped off.

Using the MI-10 system as an example, I will briefly describe the trip conditions as follows.

(1) P<06:08> (LCW pump suction pressures): At the start-up, if they are lower than the low limits, the LCW pumps are not allowed to be turned on. During the run, if they exceed the high or low limit, the LCW pumps are turned off. The Initial 15 sec Delay and 15 sec Filtering rules are applied to these.
(2) V<01:04> (House isolation valves): At the start-up, if the condition on them is not met, the LCW pumps are not allowed to be turned on. The condition is ((V01 & V02) OR (V03 & V04)) = true. V01 in the equation means that V01 is open.
(3) S<04:05> (Pond pump motor starters): At the start-up, if both of them are off, the LCW pumps are not allowed to be turned on. During the run, the 15 sec Filtering rule is applied.
(4) M_V03 (MI-60 Magnet V03): At the start-up, if it is not open, the LCW pumps are not allowed to be turned on.
(5) M02 (LCW supply in Gallery): During the run, if it exceeds the high or low limit, the LCW pumps are turned off. The Initial 15 sec Delay and 15 sec Filtering rules are applied to it.
(6) T01 (LCW supply temperature): During the run, if it exceeds the high or low limit, the LCW pumps are turned off.

3.4 ACNET Connections

In each of the service buildings (MI-10, 20, 30, 40, 50, 52 & 60), the Gateway communicates with the front-end computer of the house via an Ethernet link. The front-end in turn communicates with the console system via the Ethernet link.

There are a total of 9 front-ends that handle tasks related to the LCW controls. Some of them perform special tasks as well as communication. The MI-60 front-end performs a number of special tasks -- (a) it reads the status on four local valves and writes it at CUB for MI Makeup, (b) it reads the status on M_V03 (MI-60 Magnet V03) and writes it to all the other locations, and (c) it reads the status of the LCW pumps around the MI ring, examines it for a condition (if all the pumps are off or not) and uses the result for an action, and (d) it also writes the result to CUB. The front-ends at MI-52, MI-60 and CUB do calculations to convert the liquid levels to their volume equivalents.

3.5 Console Pages

The I56 page and its subpages show all the activities of the MI LCW system. Fig. 3.5 shows an overall view of the pump status/controls, where the operator can view the status on LCW pumps, Pond pumps, transfer pumps and other pumps, where he can turn on pond pumps individually, and where he can turn on LCW pumps using a list (specifying the turn-on order and pauses between).

Fig. 3.6 shows a view of the MI-10 LCW system, which displays the status/controls on pumps, valves and PLC, analog readings, trip flags and limits. Fig. 3.7 is a graphic view of the MI-10 LCW system.

4. Operational Experience

In 7/98, the MI-10 LCW system and MI-60 Magnet LCW system had been put in operation. By 9/98, the other locations had been put in operation, and all the service

buildings (MI-10, 20, 30, 40, 50 & 60) around the MI ring had become operational. Therefore the MI LCW control system has been operational for 7 to 5 months. During these several months, we have experienced a number of hardware and software problems.

4.1 PLC (Sixtrak modules)

As of this writing, there are a total of 11 Sixtrak systems in existence. Generally speaking, they have been running well. Some of them have been running over 6 months.
(1) DO-RLY modules: Two relay modules had problems with the ON/OFF status indications on the front. The modules were replaced on 3/18/97.
(2) CL-20M module: One current limiting module had problems with wrong over-current indications on 10/18/98.
(3) GT-ETH modules: Two Gateway modules (Nodes 04 & 08) lost communication with a laptop PC under certain conditions. The power had to be cycled to recover from the problem. This happened on 8/20/98, 10/ 9/98 and 10/16/98.
(4) Firmware (10/98): Updating the Gateway firmware from (11/97) to (10/98) froze the heart beats at 32767 and lost the controls on S101 & S102 for the MI-40 Beam Dump.

4.2 Instrumentation

(1) Pressure transducers: There were a number of pressure transducers that had to be replaced because of inaccurate readings.
(2) Liquid level indicators: On a few of the indicators, the Span had to be re-adjusted to match with the actual level even after the recommended calibration had been done. The indicators are fragile and difficult to be handled in their transportation and installation.
(3) Resistivity meters: One of the Thorton 200CRs stopped working and was sent back to the factory on 2/26/98. They replaced a defective NOVRAM (Non-volatile RAM).
(4) EIM valve actuators: As of this writing, two actuators (MI-30 & 40) stopped working. They don't respond to the input from a current source. The one at MI-40 was repaired. The potentiometer for position indication was replaced. Now questions are -- (a) Is the potentiometer of a good quality, good enough for the life of the actuator?, (b) was it properly installed with respect to the mechanical parts?
(5) Powers 535 controllers: We first did Self-tuning on them to determine the PID constant values at several locations. We then tried the original values determined by Self-tuning to regulate the LCW temperatures. However, we had to make them larger/slower in order to reduce what's called Hunting movements on the valves. By making them too large/slow, we found that the temperature regulation variations to be too large, and we had to backtrack. After several months of trials, we have arrived at final values as follows.

	Proportional	Integral	Derivative
Self-tune	0.3%	104 sec/rpt	8 sec
Final	5%	150 sec/rpt	10 sec

Acknowledgments

Firstly I would like to say "Thank you." to some members of the MI Engineering group (especially D. Capista) for their useful information -- how to operate LCW pumps, which they had acquired in working on the old MR LCW system.

What we have done for the MI LCW system is well beyond what we normally do as members of the Controls department. There are two classes of jobs (i.e., Electric and Instrumentation) between Control and Water jobs. When the EE Support withdrew itself from the project, I pointed out the above fact to the MI management. However, the MI management had not done anything. That had made us and the Water people work much harder to fill in the gap.

Because of the extended responsibilities, L. Anderson and R. Hagler have been working under new conditions (high voltages, confined spaces, high places, etc. ---) and on new devices (flowmeters, resistivity meters, valve actuators, PID loop controllers, etc. ---). Despite of odds and ends, they have done excellent work in installing Sixtrak modules and in terminating the cables for a variety of field devices.

References

[1] ISaGRAF Version 3.00 User's Guide, CJ International, 1955.
[2] Main Injector LCW Control Systems, K. C. Seino, 2/99.
[3] CUB DI Column Control Systems, K. C. Seino, 2/99.
[4] MI-60 Magnet LCW System Operations (Program Description), K. Seino, 2/99.
[5] MI-10 LCW System Operations (Program Description), K. Seino, 2/99.
[6] MI-52 LCW System Operations (Program Description), K. Seino, 2/99.
[7] CUB DI Plant LCW System Operations (Program Description), K. Seino, 2/99.

Fig. 3.1 Module Panel Layout

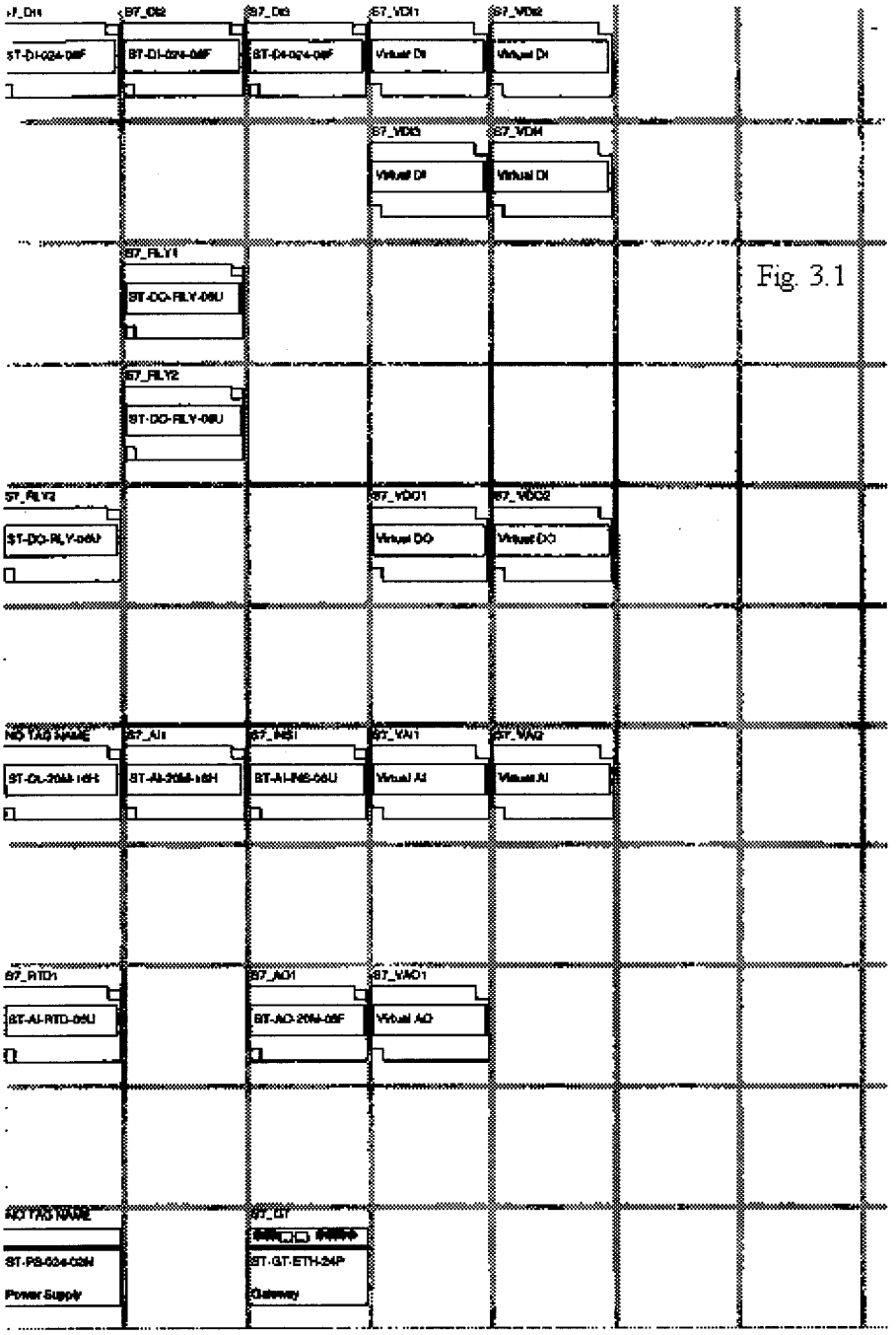

PROJECT: T57_6PJ PRINTED: Wed Feb 03 13:14:20 1999
STATION 7: S7_GT

MODULE TAG NAME	MODULE TYPE	I/O RANGE	SCAN TIME
S7_DI1	ST-DI-024-08F	X0-7	100
S7_GT	ST-GT-ETH-24P		
S7_DI2	ST-DI-024-08F	X8-15	100
S7_DI3	ST-DI-024-08F	X16-23	100
S7_VDI1	Virtual DI	X24-31	100
S7_VDI2	Virtual DI	X32-39	100
S7_VDI3	Virtual DI	X40-47	100
S7_VDI4	Virtual DI	X48-55	100
S7_RLY1	ST-DO-RLY-06U	Y0-5	100
S7_RLY2	ST-DO-RLY-06U	Y8-13	100
S7_RLY3	ST-DO-RLY-06U	Y16-21	100
S7_VDO1	Virtual DO	Y24-31	100
S7_VDO2	Virtual DO	Y32-39	100
S7_AI1	ST-AI-20M-16H	AX0-15	100
S7_INS1	ST-AI-INS-08U	AX16-23	1000
S7_RTD1	ST-AI-RTD-06U	AX24-29	1000
S7_VAI1	Virtual AI	AX32-39	100
S7_VAI2	Virtual AI	AX40-47	100
S7_AO1	ST-AO-20M-08F	AY0-7	100
S7_VAO1	Virtual AO	AY8-15	100

Fig. 3.2

Fig. 3.2 Module List

```
Application code identification

Application code version number = 5
Date of last code generation = 1/19/99 13:35:12

Project descriptor

Reference        : is7d
Author           : K. C. Saino
Date of creation : 11/ 5/98
Version number   : 1 - ISaGRAF V3.04
Description      : This was copied from is7c, and necessary
changes were made.

Changes:
(Rev.B)
(1) Changes were made to handle pulsed S<01:03>MC &
S<01:03>SMC, 6/29/98.
(2) Changes were made to implement counting filters for
trips, 7/ 7/98.
(3) Changes were made to turn on S<01:03> with individual
sequential programs, at the first gate of which the suction
pressure, the valve status and the pond water pump status
are checked, 7/20/98.
(Rev.C)
(4) Changes were made to let S<01:03>SMC reset the
sequential programs and to handle one of  TP<06:08> with
TS45 and TV14 in one software branch for pump starting, 8/26/98.
(5) TMV03 was added to the software branch mentioned in (4),
10/ 8/98.
(Rev.D)
(6) To PWcntl, changes were made to switch from one to another
when the primary does not function.  1 sec delays were added
to take care of a timing problem, 11/ 5/98.
(7) The M02 multiplier was changed from 5.525 to 11.049,
11/ 7/98.
(8) In RunS<01:03>, at GT10, if S<01:03>RS becomes false,
the system is re-initialized, 1/18/99.
(9) Pump start-up and runtime delays were changed from 10s
to 15s, 1/19/99.
(10) In RunS<1:3>, M_V03NS was activated, 1/19/99.

Notes:
(1) The valve status (V14NS) will be ignored until the valve
actuators are installed, 7/20/98.


Program hiararchy

Begin:        Updt1 (FBD)
              SLPmp (FBD)
              TDRly1 (FBD)
              TrpLt1 (FBD)
              PWcntl (FBD)
              PrsCK (ST)

Sequential:   RunS01 (SFC)
               └─SPonS01 (FBD)
              RunS02 (SFC)
               └─SPonS02 (FBD)
              RunS03 (SFC)
               └─SPonS03 (FBD)
```

Fig. 3.3

Fig. 3.3 Project (is7D) Description

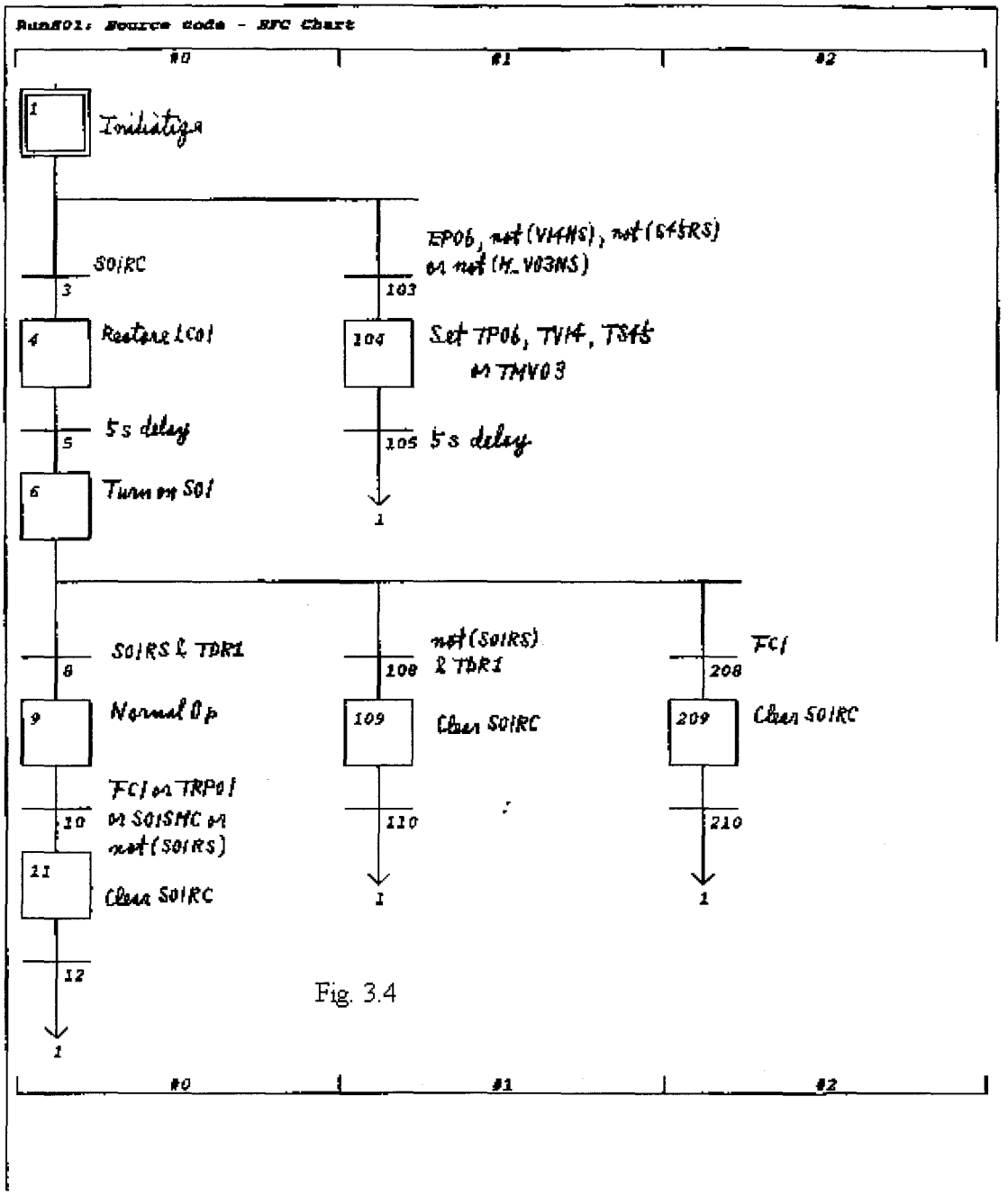

Fig. 3.4

Fig. 3.4 Sequential Program (RunS01)

Console Location 122, 9-FEB-1999 09:18

PA:I566 MAIN INJECTOR LCW<NoSets> 09-FEB-99 09:18:58 ♦Pgm Tools♦

GLOBAL | mi-10 | mi-20 | mi-30 | mi-40 | mi-50 | mi-60 | abort | mi-08 | mi-52 | cub | tevatron | graphics

Global Status

PUMPS	temperatures & pressures						exchangers			
	Magnet System						Beamlines		RF System	
	MI-10	MI-20	MI-30	MI-40	MI-50	MI-60	MI-08	MI-52	60-RF	60-CV
♦LCW Pumps♦ ♦Trip Flags♦	. . .	. . .	. . .	. . .	. . .	. . .	1 2 3	* . .	* . . . *	* .
LCW Internal Recirc.						*		*	*	*
♦Pond Pumps♦	. .	. .	. .	* .	. .	. .	1 2	. *	. *	ICW
Transfer Pumps			* .							

Messages

Fig. 3.5

Fig. 3.5 Pump Status/Controls

Console Location 122, 9-FEB-1999 09:19
PA:I$56 MAIN INJECTOR LCW<NoSets> 09-FEB-99 09:19:46 ♦Pgm Tools♦
GLOBAL|MI-10|mi-20|mi-30|mi-40|mi-50|mi-60|abort|mi-08|mi-52|cub|tevatron|graphics

MI-10 LCW

Pump Status	Analog		Analog		Trip Flags		
LCWS01.	F01	99.87	P01	10.55	F02	1062 GPM	.
LCWS02.	F02	1062	P02	181.4	P06	14.82 PSI	.
LCWS03.			P03	184.2	P07	18.21 PSI	.
PNDS04.	R01	12.55	P04	187.7	P08	13.45 PSI	.
PNDS05.	R02	12.29	P05	199	T01	94.95 degF	.
	R03	18.19	P06	14.82	S45 Trip		.
Valves			P07	18.21	V14 Trip		.
Discrete	T01	94.95	P08	13.45	MI60 V03 Trip		.
V01 ..	T02	97	P09	3.381	PLC Trip Limits		
V02 ..	T03	54	P10	19.46	P68 preset cnts	140	
V03 ..	T04	80	P11	47.51	F02 preset cnts	140	
V04 ..	T05	40			F02 upper limit	2000	
	T06	41			F02 lower limit	0	
Continuous					P06 upper limit	220	
WD1	5.459	%Open			P06 lower limit	4.993	
Set Pt	95	degF			P07 upper limit	220	
					P07 lower limit	4.993	
PLC State-1	9				P08 upper limit	220	
State-2	9				P08 lower limit	4.993	
State-3	9				T01 upper limit	115	
♦Reset♦ HrtBt	13277				T01 lower limit	55	

♦engers♦
RF System

0-RF	60-CV
*	*
.	.
.	
*	
*	*
.	ICW
*	

Messages

Fig. 3.6

Fig. 3.6 Console Subpage of MI-10 LCW System

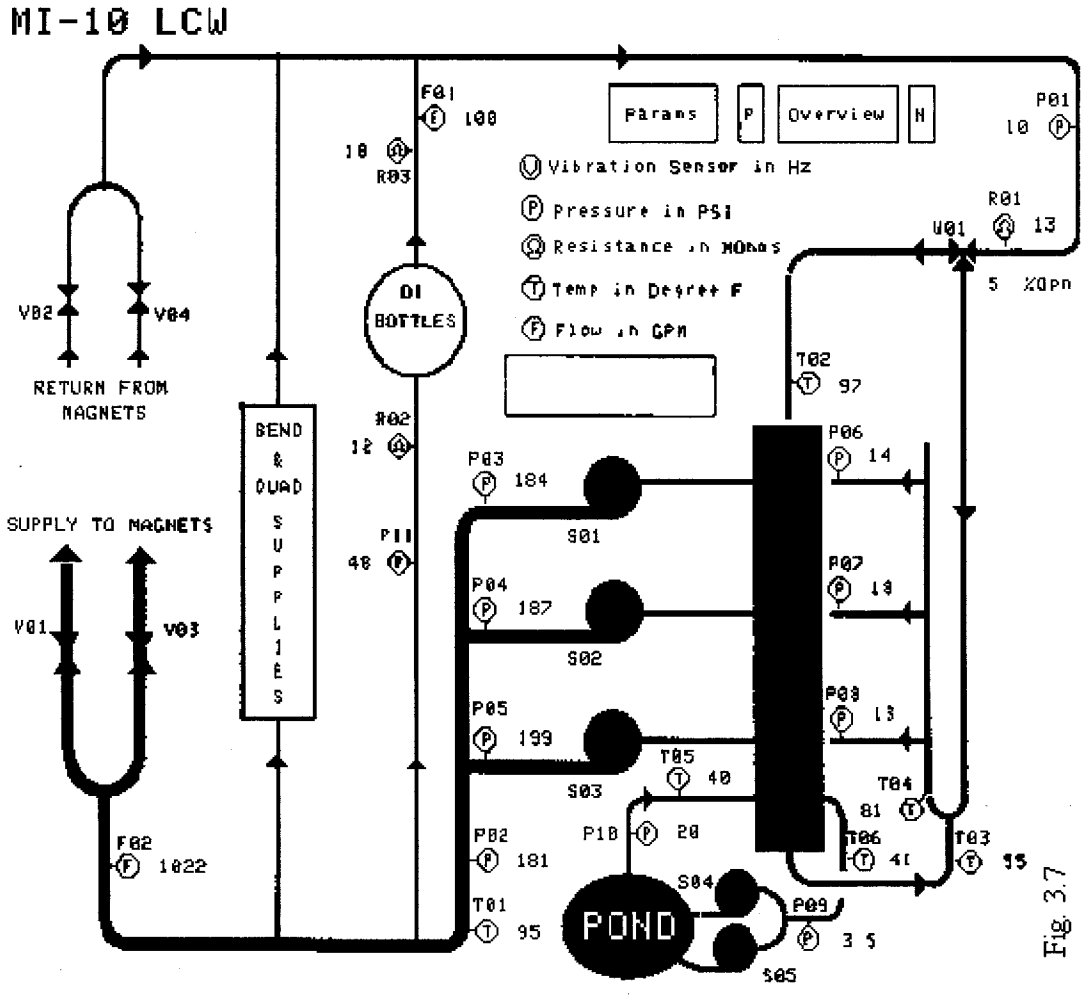

Fig. 3.7 Graphic View of MI-10 LCW System

Fig. 3.7