Fermi National Accelerator Laboratory

FERMILAB-TM-1759

The Design, Fabrication, Operation and Maintenance of DØ Prototype 1/2 H.P. 170 S.C.F.H. Gas Recirculating-Filtration - Blending System

G. Sellberg and P. Rapp

Fermi National Accelerator Laboratory
P.O. Box 500, Batavia, Illinois 60510

October 1991

Operated by Universities Research Association Inc. under contract with the United States Department of Energy

Introduction

Fermi National Accelerator Laboratory (Fermilab) DØ collider, E-740, uses 150 proportional drift tube (P.D.T.) modules connected to a common multiple header to supply clean low pressure gas. A second multiple header returns the gas to the mixing area and exhausts it to the atmosphere.

To test and debug the major construction problems associated with a large and long term experiment, a small cosmic ray test stand was constructed in the Wilson Hall ground floor Physics area. The first four P.D.T.'s that were constructed at FNAL's lab 5 Assembly area were installed in an 110 ton cosmic ray test stand. Two P.D.T.'s were installed above the double 50 ton magnet toroids and two were installed below.

A prototype gas system was fabricated for the purpose of conducting development of a recirculating, filtering, and blending system for gas components as called upon by daily requirements set by the current needs of a collider experiment.

Pump, Filtration, Rack Package

Pump

After trying several styles of pumps a stainless steel metal bellows pump was selected for durability. This compressor consist of two AM-350 S.S. bellows, 300 series S.S. bellows headers, with an aluminum casting housing body. The driver is a 1/2 h.p., 3450 r.p.m. horizontal induction 6.8 amp., 115 V.A.C. motor.

The two bellows are separated by a three gallon storage tank, which now causes the pump to act as a two stage system.

Filtration

After the pump is the primary filtration system, consisting of several types of contaminant reduction: a charcoal bed for any oil vapor and large particulate, a heated copper bed for oxygen reduction, a 4Å molecular sieve for water vapor reduction, and a final 0.5 micron filter to prevent particulate from entering the high pressure feed side of the rack. An osmosis type nitrogen separator is currently under study for removal of the other contaminants (80% nitrogen from atmospheric leakage).

Pressure Control

The pressure control consists of two (2) Dwyer photohelics set to balance the needs of the total system.

The high side photohelic monitors the return side pressure which controls the input solenoids which set the internal pressure of the P.D.T's.

The second (low side) photohelic monitors at the same point of reference as the first, but controls a solenoid to balance the internal pressure of the second stage tank of the pump by introducing gas from the high pressure buffer tank. This prevents the pump from pumping on the low pressure input.

Blending

A set of "Matheson" flow controllers for Argon(Ar), Carbon Dioxide(CO_2), Ethane(C_2H_6), Freon14(CF_4) were fabricated into a portable rack to fine tune the premixed gas from the vendor.

Gas Quality Measurement

A single oxygen detector was incorporated into the monitoring system of the pump rack. The detector is one of the major control devices in shutting down this system. If the oxygen level exceeds a threshold (which can be set on the detector) a dangerous condition is totally avoided by positively shutting off the recirculating pump and switching over to a "single pass" passive gas system (see fig 2). This detector can be set also to monitor the level of oxygen contamination (which affects the gas gain - see "Study of Fast Gases, Resolutions, and Containments in the DØ Muon System"15,Nov,89).

Water vapor, Carbon Dioxide, and Freon14 detectors have been installed in a portable rack for diagnostic work.

List of Components

1. Compressor
2. Charcoal Bed Filter
3. Oxygen Reduction Filter
4. Molecular Sieve Bed Filter
5. Delivery Pressure Regulation
6. Gas Blending System
7. Gas Monitoring

1. Compressor

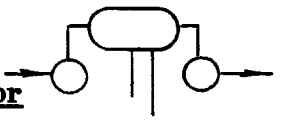

Several styles of compressors were evaluated for use with our service needs. At first argon/ethane 50/50% gas mixture was chosen as the best medium for gas multiplication. After careful safety review of problems associated with large volumes of explosive gas(C_2H_6 ethane) mixtures, a gas mixture of argon/CO_2 90/10% evolved from Lab 6 studies on non-explosive mixtures (see "Study of Fast Gases in DØ Muon System" 15 Nov 89).

The first compressor purchased was a "Thomas Industries Inc." 1/2hp,115V.A.C. 4.80C.F.M. @ 15 PSIG. with buna-n(rubber) diaphragm. This compressor ran from 7/17/86 to 10/02/87. The problem of excessive wear on the diaphragm caused fine particulate to clog the filter section and finally breaching of the diaphragm caused atmospheric leakage to be pumped into the system.

On 10/03/87 a "metal bellows" stainless steel twin bellows pump was located, that had been in service for many unknown hours. This pump was inspected, cleaned, and reincorporated into our pump rack.

The operation record of the pump is as follows:

10/03/87 start up of S.S. Bellows Pump

12/18/87 starting capacitor failure

09/16/88 failure of bearings and starter control and thermal protection circuit board

As of 10/03/87 to 11/26/90 the pump has logged more than 43,000 hours without a fracture in the S.S. Bellows or valve area.

The vibration due to two opposed bellows is contained with appropriate damping techniques. The motor is mounted with elastic shock mounts to the floor to aid in vibration isolation.

All of the associated rigid tubing is separated from the pump with flexible metal hose.

The electrical control on the pump circuit is from three devices, oxygen monitoring and low pressure closures. The low pressure "Dwyer" photohelic monitoring the return gas line, controls a solenoid which injects high pressure(15 p.s.i.g.) gas from the buffer tank into the second stage tank situated between the first and second bellows on the pump. This prevents the pump from pumping too hard on its input. There is also an adjustable pressure switch to shut down the s.s. pump upon a low pressure(<3 p.s.i.) condition on the 15 p.s.i. side of the pump.

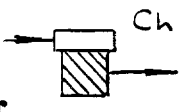

2. Charcoal Bed Filter

High flow purifier canister style filters were installed before and after the bellows pump to remove any hydrocarbons or oil vapor from the gas stream. The maximum continuous flow 1-3C.F.M. (28.3-84.9L.P.M.) in each unit would necessitate running several filter units in parallel to achieve the required flow rate for the larger complete Muon system

The pressure drop is 1 (one) P.S.I.G. at 7.5C.F.M. (212.3L.P.M.). With the filters at the high pressure side of the pump the drop in pressure due in part to C_v losses associated with filtration is insignificant.

3. Oxygen Reduction Filter

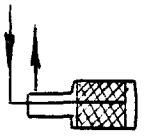

Several styles of reduction are listed in the "Chemist's Companion" under the experimental techniques section.

Many commercial catalytic purifiers are available on the market."Deoxo", "Oxisorb", and "Ridox" are cost inefficient in that they can handle at the most 3-4 [300Cu.Ft.ea.] bottles of gas and the gas must not have > 30ppm O_2 contamination level to begin with.

The "BTS Catalyst" company listed in the "Chemist's Companion" was found to be closed and was listed as "No Forwarding Address".

"Copper Filings" was the last choice because of long development time needed to perfect a unit of sufficient size for our needs. [See T.M. on Cu Oxygen Reduction, Fermilab.] After months of prototyping a filter using the "Heated Copper Method" is now in use.

The "heated copper" filter has the capability to reduce oxygen levels to the desired level [see "Studies of Fast Gases" 15 Nov 89] by control of the ceramic oven temperature.

Levels of contamination of over 900ppm O_2 in the gas stream have been reduced to below 10ppm for periods of months. The longest was from 07/14/88 to 06/12/90. The failure of the unit on 6/12/90 was caused by a relay contact sticking closed, running the oven temperature to 1200°C, melting the copper mesh into a ball thus reducing the surface area and rendering the filter insufficient.

This was only the prototype and material for the next generation was fabricated, pressure certified, and installed and is in use currently. Overtemperature protection has been installed.

A stainless steel heat exchanger was fabricated to preheat the incoming gas stream via the heated filter's exhaust gas stream. This improved the efficiency of the system and reduced the electrical load on the duty cycle of the temperature controller.

Improvement in performance can be had with better designs, but the heat exchanger currently can handle 335°C exhaust temperatures and raise the input gas temperature to 233°C. Currently this is sufficient for the recirculator needs with a load of four(4) drift chambers and the majority of gas being diverted back to the pump.

4. Molecular Sieve Bed Filter

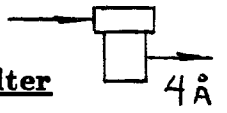

This is a high flow purifier canister style filter equivalent to the charcoal canister but with a 4Å(Sodium Alumino Silicate) molecular sieve. The silicate is capable of absorbing 1750 S.C.F. @125psi saturated at 90°f or 134 grams of water. The current level we achieve is approximately 100 ppm H_2O.

5. Delivery Pressure Regulator

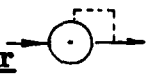

Line delivery regulation (3 p.s.i.g.) is handled by a "Matheson Model 3700 Series Low Pressure Line Regulator".

The construction is of zinc casting with a large surface area diaphram which assures the system of low pressure control. Pressure adjustment is of a screw type with a protective cap to prevent accidental adjustments. Maximum flow is 550 S.C.F.H. (260 L.P.M.).

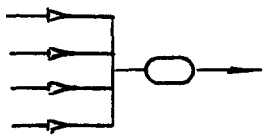

6. Gas Blending System

The system has the capability to blend a correction factor into the premix(AR/CO_2) gas supply, depending on the demands set by current needs.

A Matheson Model 8175 four(4) channel mass flow meter readout with four(4) tranducers feeds either Argon or CO_2 into the gas stream.

The four(4) tranducers 1)Argon 0-100 SLPM, 2)Ethane 0-160 SLPM, 3)Freon14 0-100 S.C.C.M., and 4)CO_2 0-100 S.C.C.M. are controlled by proportional 0-5 VDC command set by the control box (see "Principle of Operation of Matheson's Control Conductors" May 1990).

When the exhaust input to the pump matches the input to the system, the correction gas is then turned "off". The entire gas system is constantly monitored for the CO_2 fraction. In the near future, the Freon14 concentration will also be monitored.

7. Gas Monitoring

Built into the rack is a "Thermox I Oxygen Analyzer" which controls the pump circuitry. A threshold is settable on the device to shut down the pump when an unacceptable level of oxygen passes through the pump and filter section. With this device the entire gas loop is protected in the event of a leak in the system. The analyzer has shut down the pump several times in the past and switched to a passive "one pass gas system" automatically. Oxygen levels which exceed the "window" limits were caused by various failures with associated equipment. [ie. solenoids unscrewing due to 60hz vibration, overheating silver solder joints in early prototype heat exchangers, support personel unknowingly leaving sample gas valves open, rupture of plastic "Polyflow" gas lines by a soldering iron.]

The Thermox I has two(2) range settings: 1) air ≃ 180,000 to 0.1ppm and 2) 1,000 to 10ppm O_2. We usually use the 2nd range. The threshold remains constant between the two range settings.

Thermox I works on the mobility of the oxygen ions in its crystal structure, to induce an electrical current in a heated (770°C) closed end tube made of zirconium oxide, which drives an analog panel mount meter. Further detail see "Instruction Manual for Thermox Instruments, Inc."

The separate "portable analyzer and blender rack" contains a "Beckman Industrial" model 870 Infrared Carbon Dioxide (CO_2) detector with the range of 0-20%, also a freon14 infrared detector with range of 0-20% by the same company. See product information sheet for details on the two(2) infrared detectors "Beckman Industrial Corp."

A second oxygen detector "Custom Sensors & Technology" is incorporated with the portable rack which works on the diffusion barrier principle, oxygen is

reduced to hydroxyl ions which oxidize a metal anode thus inducing a current which is proportional to the rate of consumption of the oxygen.

The last detector is a "Panametric Hygrometer" water (H_2O) vapor analyzer. This system measures water content over a wide range 200,000 ppm to 0.001 ppm. (see information sheet for more detail, "Panametrics Hygrometer").

All units have either a 4-20ma or 0-5V output for external computer monitoring from remote locations

List of Figures

1) Schematic of Recirculation Mode

2) Schematic of Passive Mode

3) Rack Layout

· RECIRCULATION MODE ·

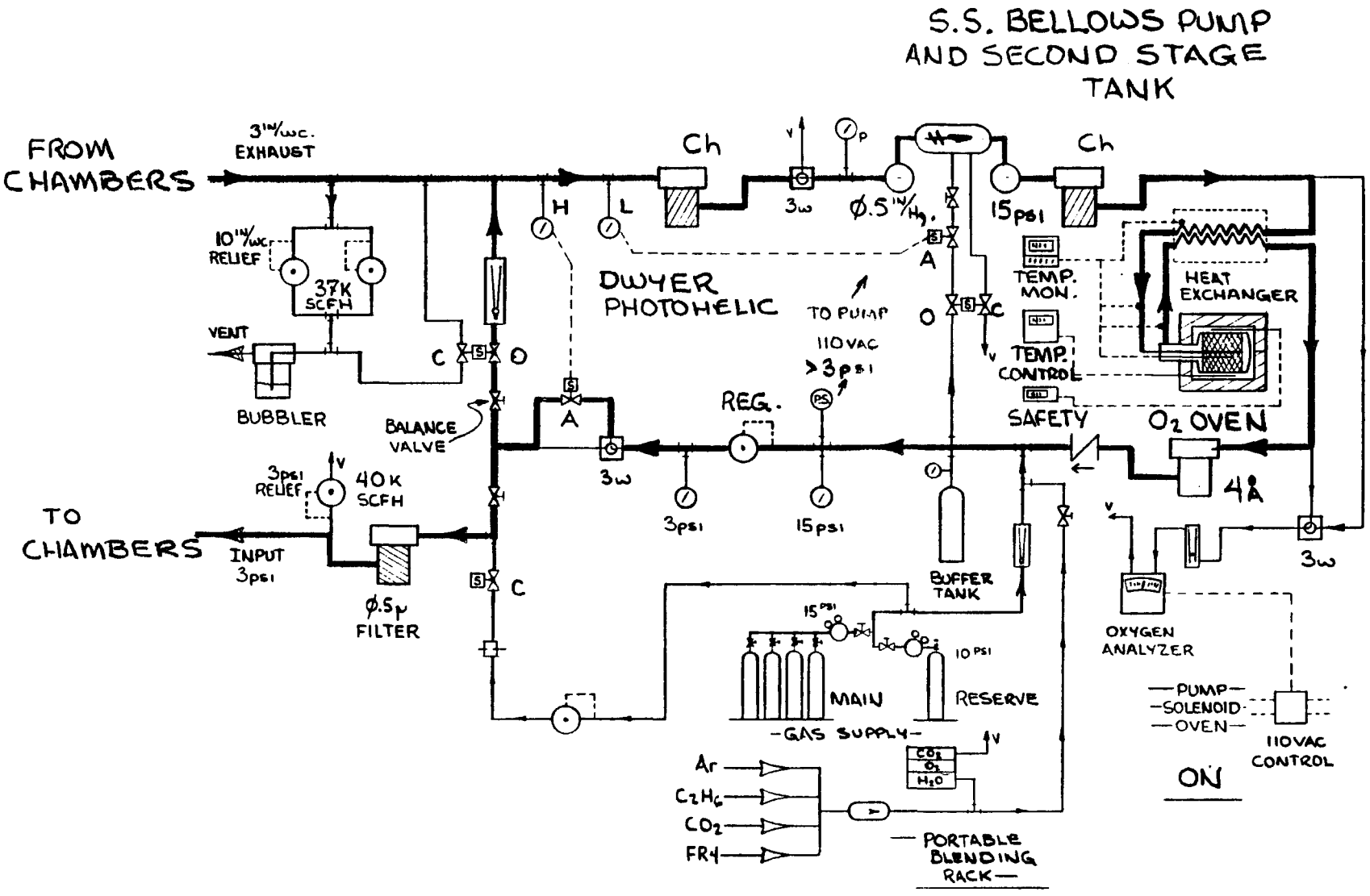

1) SCHEMATIC of RECIRCULATION MODE

• PASSIVE SINGLE PASS MODE •

- LOSS OF POWER
- >5,000 ppm OXYGEN
- LOW PRESSURE ON PUMP OUTPUT

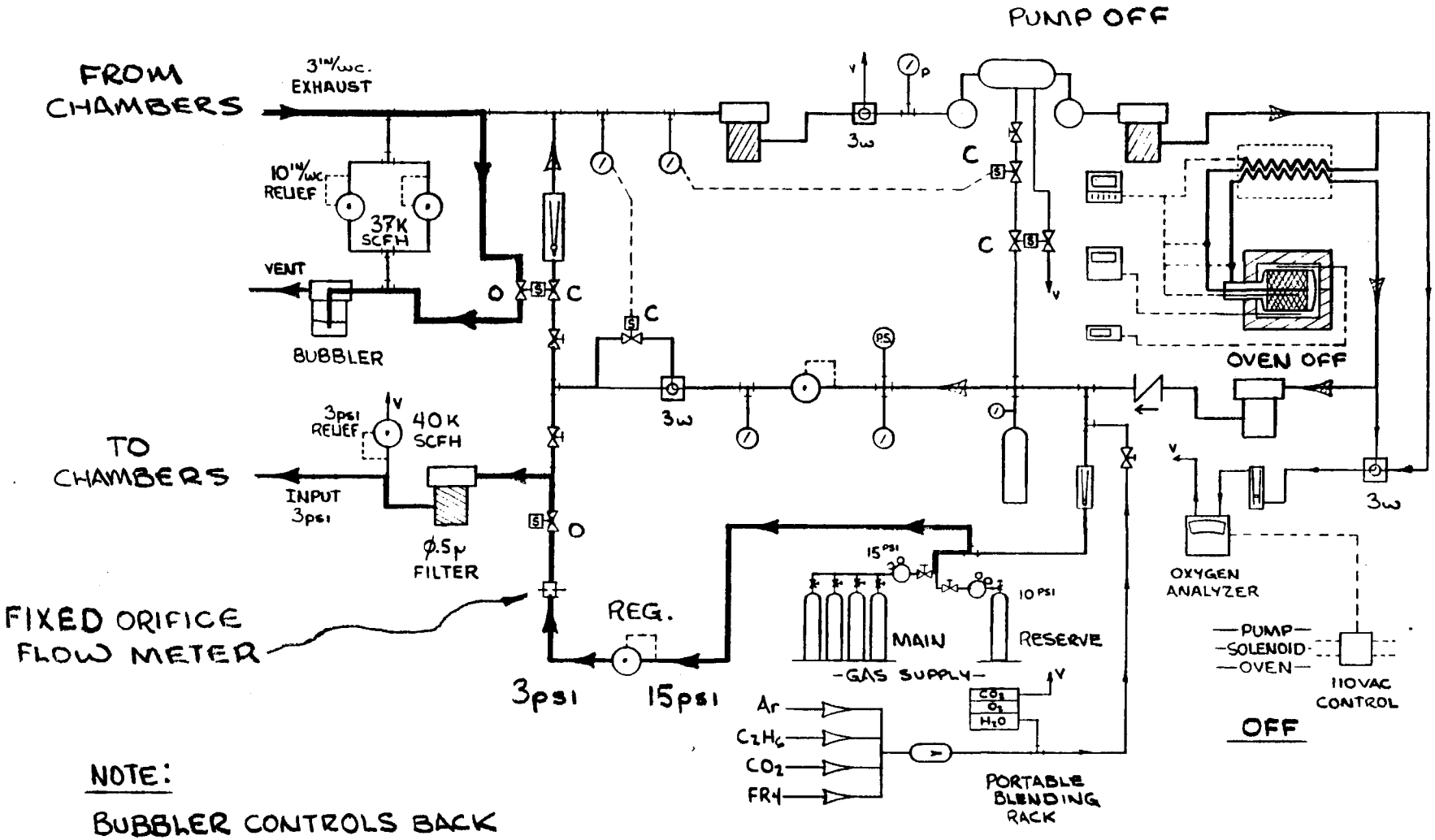

NOTE:

BUBBLER CONTROLS BACK PRESSURE IN CHAMBERS

2) SCHEMATIC of PASSIVE MODE

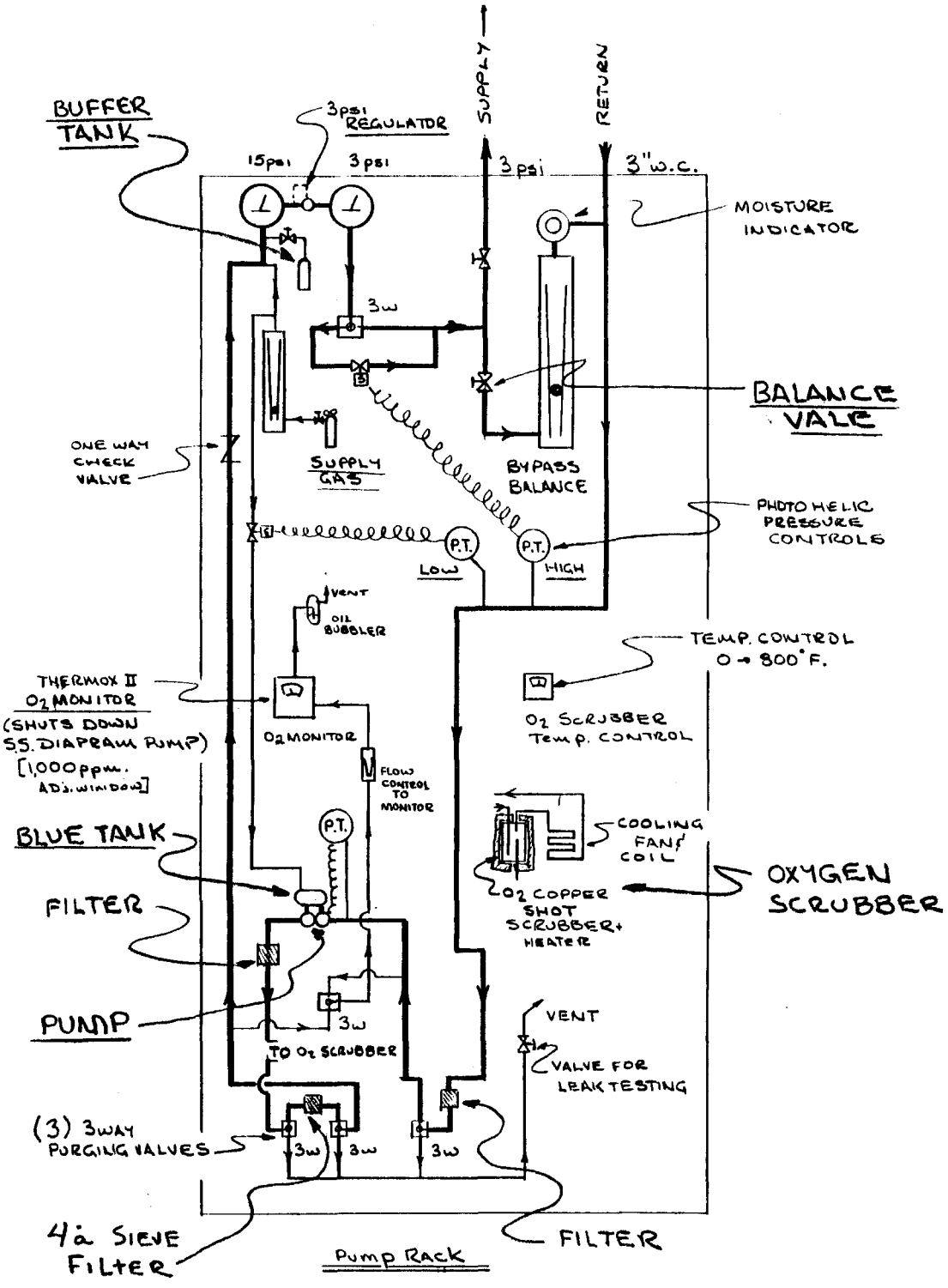

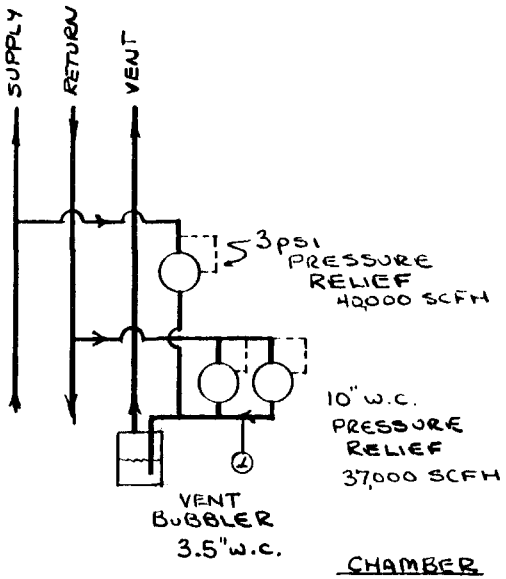

CHAMBER SAFETY SYSTEM

PHOTO OF PRESSURE RELIEF SYSTEM

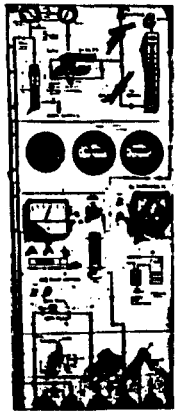

PHOTO OF PUMP RACK FRONT

3) RACK LAYOUT