Fermi National Accelerator Laboratory

TM-1678

Operation of a 2-Phase Return Dewar in a Satellite Refrigerator *

J. D. Fuerst
Fermi National Accelerator Laboratory
P.O. Box 500
Batavia, Illinois 60510

August 1990

Operated by Universities Research Association Inc. under contract with the United States Department of Energy

Fermilab

OPERATION OF A 2-PHASE RETURN DEWAR IN A SATELLITE REFRIGERATOR

J.D. Fuerst

30-AUG-88

Introduction

In late 1986 a 100 liter liquid helium phase separator/dewar was designed for use in the Tevatron satellite refrigeration system[1]. Installed on the low pressure return side of the helium circuit between the tunnel return and the exchanger cold end (see fig. 1), this vessel was to provide phase separation for a future centrifugal cold compressor installed immediately downstream. Additionally, the vessel by itself would buffer the satellite refrigerator's coldbox from cryogenic system upsets occuring in the tunnel during Tevatron operation (quenches, ramp on/off transients).

By mid-1988 a prototype had been constructed and approval received to install the 2-phase return dewar (as it was now called) in the A1 refrigerator. This paper describes both vessel and refrigerator performance during this test period (June 1988 to present) and draws conclusions with regard to the benefits of such a device in a satellite refrigerator.

Project Rationale

This vessel was conceived initially as a phase separator for centrifugal cold compressors. Fermilab's interest in cold compressors stems from a desire to reduce Tevatron magnet temperatures in order to increase peak machine energy and reliability[2]. The nature of centrifugal (as opposed to reciprocating) devices prohibit them from seeing 2-phase flow at their inlet - any droplets entrained with the intake vapor will severly damage the machine's impeller. Since the Tevatron's 2-phase flow typically contains up to forty percent liquid phase by mass at the tunnel exhaust, it is necessary to separate liquid and vapor phases drawing only vapor into the cold compressor.

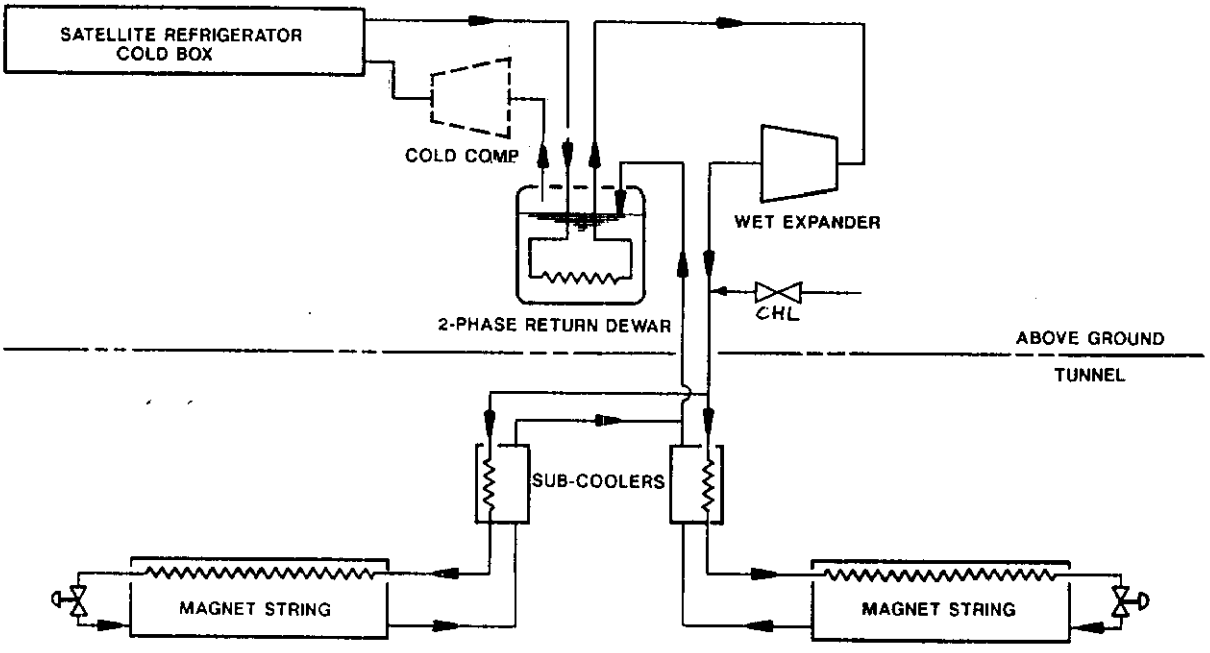

Fig. 1 Schematic of satellite refrigerator with dewar

It became apparent that liquid collected by the dewar could be used to precool our wet expander inlet flow, yielding benefits on its own. In particular, to a certain extent the coldbox can be isolated from upsets in the magnet strings. Under normal operation, the coldbox sees a flow imbalance biased towards the shell side due to the inclusion of flow from the Central Helium Liquifier (CHL) at the base of the coldbox downstream of the wet expander. During refrigerator upset (change in ramp condition), the flow imbalance can shift due to oscillations in helium density. With more flow entering the refrigerator on the high pressure side of the exchanger than exiting on the low side, a slow temperature rise can occur. Left unchecked, this phenomenon will warm the wet expander's intake flow to the point where the expander's exhaust temperature (and by association, the magnet temperature) exceeds trip levels and refrigerator ramp permit is lost, taking down the accelerator. Current (partially successful) methods for avoiding this condition include taking excessive amounts of flow from the CHL at all times. This produces an abnormally large liquid fraction returning from the tunnel via the 2-phase helium circuit which then floods the bottom of the coldbox. By "freezing out" the cold end of the exchanger in this manner, refrigerator permit often can be preserved.

This technique is wasteful of refrigeration by virtue of the fact that CHL capacity is squandered and satellite refrigerator exchangers operate less efficiently. Inclusion of a dewar at the tunnel exhaust can solve this problem by providing separation of liquid and vapor phases. Vapor only is sent up the return side of the exchanger while liquid pools in the vessel, precooling the wet expander intake flow via a submerged high pressure flow path of coiled finned tubing. During refrigerator upset when an undesirable flow imbalance exists, dewar liquid is consumed as the wet expander intake flow precools and insufficient quantities of 2-phase helium are returned. Thus, "stored" refrigeration in the dewar is released to the exchanger shell side. This lost liquid is replaced during normal operation. Quench recovery time is also expected to decrease due to the availability of this stored liquid while the quenched string refills. Finally, flow from the CHL to a satellite refrigerator could be regulated by dewar liquid level. This would allow the satellite's exchanger to operate closer to design temperatures and also provide a responsive loop for dewar refill after refrigerator upset.

With these possible benefits in mind, a 100 liter vessel (sized to provide adequate liquid reserve for most upset conditions) was designed, constructed, and tested at Fermilab's A1 satellite refrigerator building (see figure 2 for vessel layout).

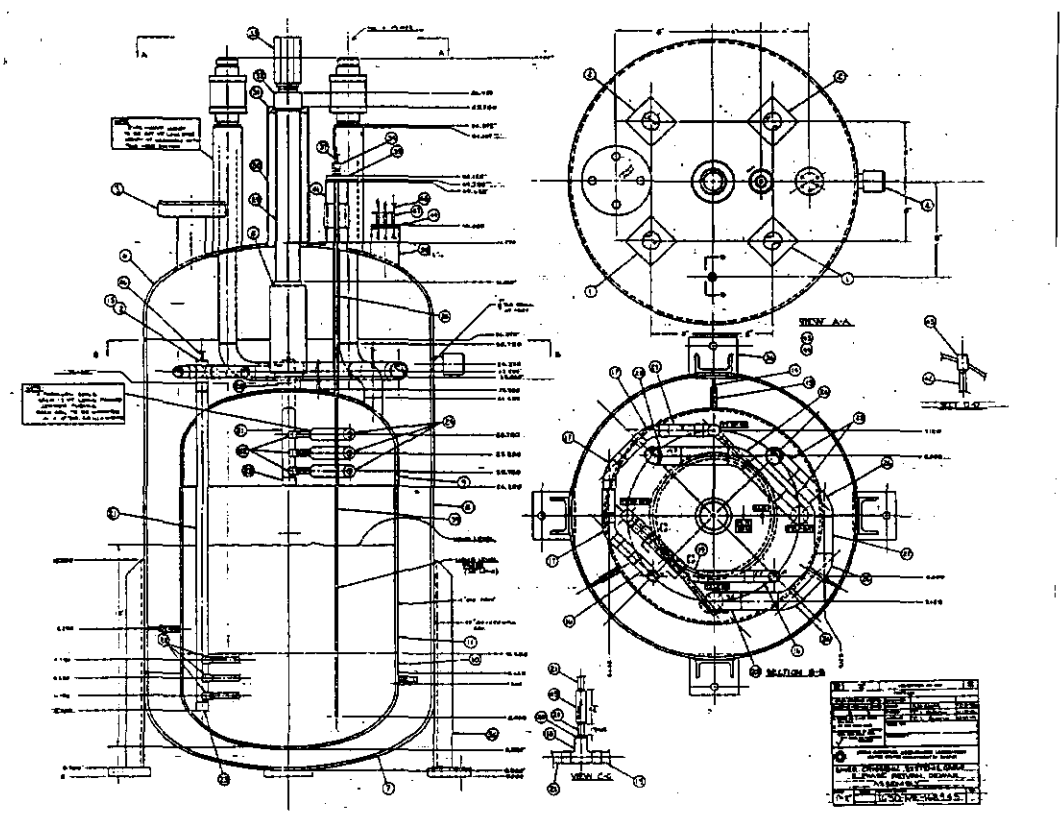

Fig. 2 Layout of 2-phase return dewar

Test Description

The dewar was plumbed into the refrigerator as indicated in figure 1. Instrumentation included all standard satellite refrigerator devices[3] along with the following additional instrumentation on the dewar itself: pressure taps on both high and low pressure intakes and exhausts, helium vapor pressure thermometers at these same locations, a carbon resistor thermometer on the high pressure intake, a differential pressure-type liquid level gauge, and a superconducting probe-type liquid level gauge. With this instrumentation, it was possible to evaluate dewar performance in the following areas:

1.) ability of the refrigerator to function normally with the inclusion of the 2-phase return dewar
2.) ability to maintain stable liquid level/ability to control CHL supply with liquid level
3.) correctness of design with regard to dewar volume
4.) effectiveness of design with regard to wet expander intake flow precooling
5.) ability of the dewar to act as an effective, reliable phase separator for a centrifugal cold compressor
6.) ability of the dewar to "decouple" the coldbox from the magnet strings thereby conserving CHL flow and allowing the satellite exchanger to operate more efficiently
7.) ability of the dewar to shorten quench recovery time through utilization of stored refrigeration.

These seven points will be addressed in the following section. The A1 refrigerator is standard in all other respects save for the inclusion of this vessel. Data was taken both locally and via remote readbacks which were either plotted in real time or datalogged. Datalogging was particularly useful with respect to quench data as quenches are unpredictable events.

An additional piece of information was made available with the installation of this device - namely, it became possible for the first time ever to quantify the percent liquid returned out of the magnets to the shell side of the satellite's heat exchanger (see fig. 3). This is a particularly useful number as it tells how much "safety margin" the cryogenic system is operating with at any given time. It is a measure of excess refrigeration supplied as a cushion in the event of the unexpected. With known flowrate and intake and exhaust pressures and temperatures on the high pressure circuit in the dewar, it is possible to calculate the dewar's heat transfer rate. Given the pressure over the liquid bath, latent heat is known and the resultant liquid boil-off rate is derived. Assuming continuity (constant liquid level) and steady state (of order hours), the necessary mass flow of liquid into the dewar from the tunnel is equal to the boil-off rate.

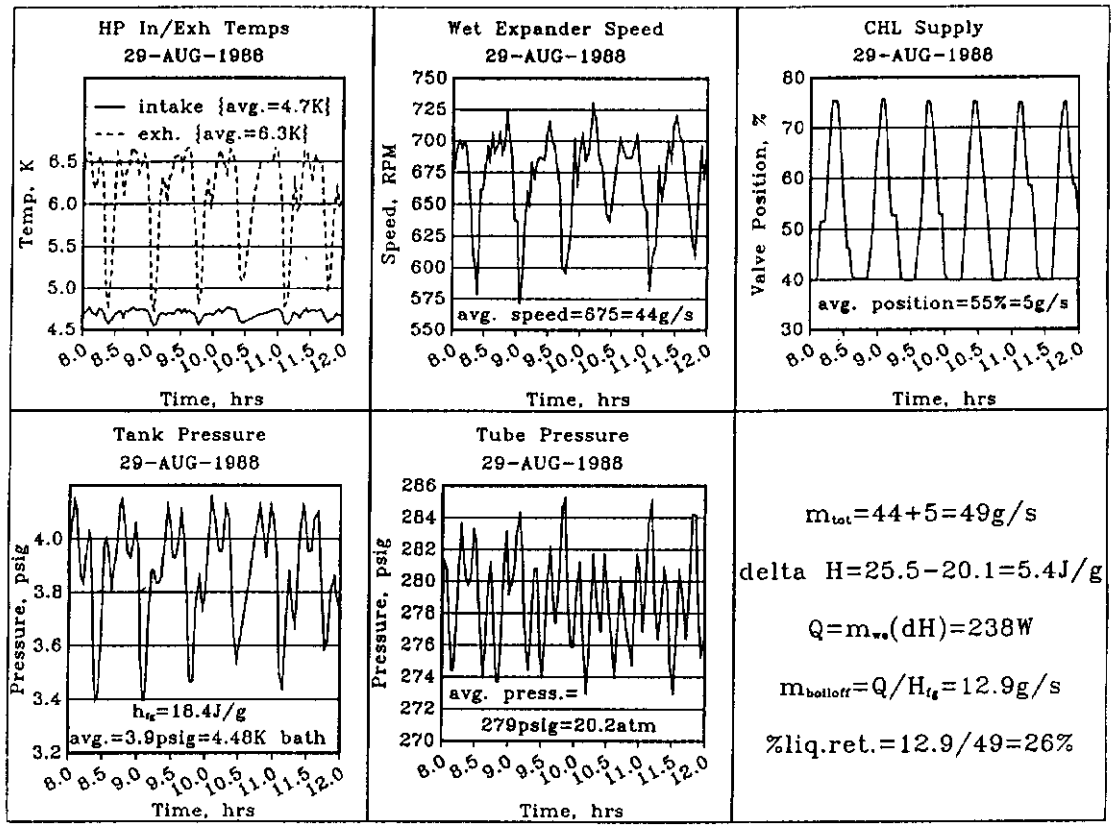

Fig. 3 Calculation of % liquid returning from magnets

Together with the known total tunnel mass flow, a percentage liquid returned is calculated. It then becomes possible to tune tunnel flows to minimize this mass percentage and thereby conserve refrigeration (to a point). Results of this tuning program are also presented in the following section.

Test Results

1.)

The dewar was put on-line and cooled down at A1 in June of 1988. No change in refrigerator behavior either during cooldown or during regular operation was detected, although when cold the dewar invariably overflowed into the bottom of the heat exchanger. This was expected since refrigerator control loops had not yet been modified to take advantage of the dewar's presence. With the dewar on-line, then, the initial effect was that normal refrigerator performance was not affected although there were now an additional 100 liters of liquid helium stored in the low pressure circuit. Wet expander intake temperature was unchanged because under usual (no dewar) operation, the bottom of the coldbox floods somewhat and "precools" (albeit inefficiently) this flow. The dewar was essentially invisible to the refrigerator under normal conditions, as had been hoped.

2.)

With CHL flow continuing to regulate off of coldbox temperature as in a standard refrigerator, the dewar liquid level consistently overflowed. When control loop modifications were made to regulate CHL supply with dewar liquid level, a stable (plus or minus five percent) level was easily acheived. This in turn caused the middle of the coldbox to warm by about 5K, approaching design conditions (see fig. 4) - the coldboxes are typically run colder than design for the reasons listed in the project rationale. Again no adverse effects were seen. It was proven possible to regulate level at any set point desired, although a level between fifty and seventy percent was preferred. Wet expander intake precooling became insufficient below the fifty percent level while it was felt that levels above seventy percent did not provide a sufficient safety margin for adequate phase separation (critical for future centrifugal cold compressor testing). The ability to reliably maintain a desired liquid level is considered a key success in this test program.

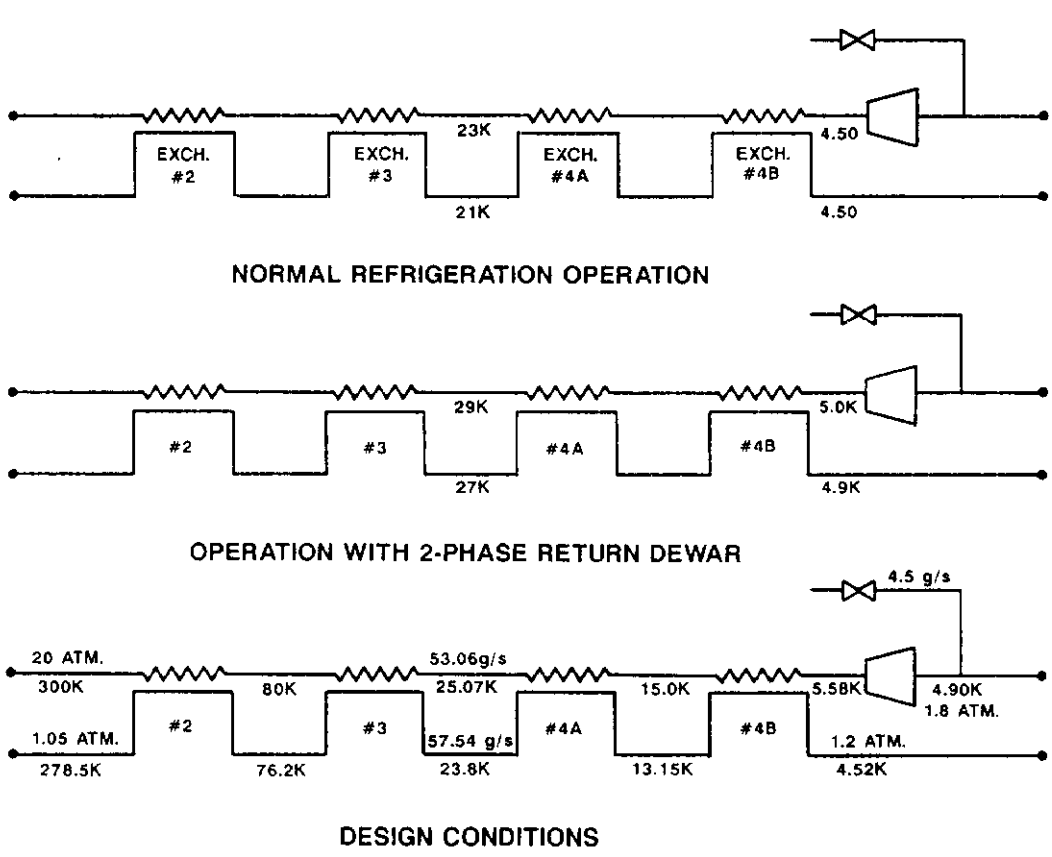

Fig. 4 Comparison of coldbox temperatures

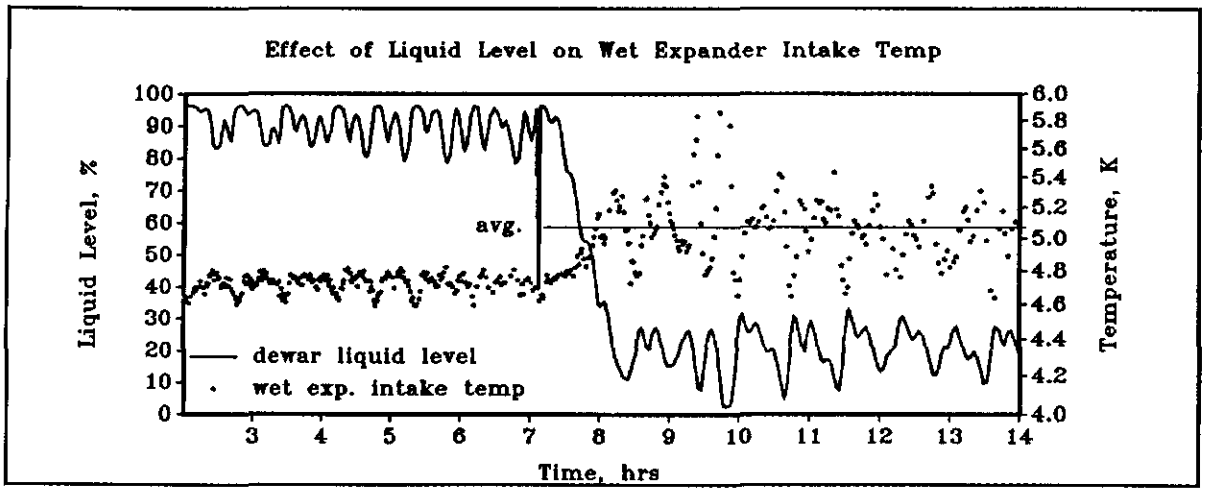

Fig. 5 Expander exhaust temp. vs. dewar liquid level

3,4,5.)

Dewar volume has been judged adequate and at a practical maximum from the standpoint of the vessel's physical size and available installation room. With 26 satellite refrigerators each possibly containing 100 liters of liquid helium, this volume represents an addition equal to five percent of the total existing liquid helium inventory. Those events that cause large dewar inventory swings (quenches, ramp transitions) and their relative demands on inventory will be discussed later. Wet expander intake precooling has proven an effective and efficient alternative to flooding the coldbox bottom as long as a reasonable (above fifty percent) liquid level is maintained (see fig. 5). It appears that the dewar can be kept from overflowing and therefore can serve as an effective phase separator. However, conclusive evidence for the total absence of entrained droplets in the low pressure dewar exhaust has not been obtained. Quench behavior also produces abrupt changes in liquid level and, although major oscillations are not set in motion, the likelihood of 2-phase surging out of the dewar appears high. For this reason, it is felt that some protective compressor shut-down scheme needs to be provided at the onset of quench - further examination into the feasibility of this concept is required. A sintered metal filter might knock out any entrained liquid, assuming acceptable pressure drop.

6,7.)

This "decoupling" effect has been difficult to quantify. There have been many ramp on/ramp off transitions since the inception of these tests, none of which have disturbed the cold box or wet expander intake temperatures at A1. Due to the regulating nature of CHL supply with dewar liquid level, it is uncertain whether level has shifted during these changes in ramp condition.

It has been impossible to conduct a rigorous, controlled investigation because of the sensitivity of the Tevatron and the physics program it supports. The availability of significant accelerator downtime could expedite this work. Qualitatively, however, the refrigerator has performed well, with a documented increase in coldbox operating temperatures (moving closer to design). There have been ten quenches at A1 between June and September of 1988, all of which have recovered as well as or better than expected. Quenches cause dewar liquid level first to plummet as relatively warm gas is drawn rapidly through the exchanger tube side to replace lost inventory (pressurized helium is dumped directly from the quenched magnets to the suction header, bypassing the exchanger shell side). Level then climbs as CHL flow is fed at maximum rate into the tunnel, typically reaching overflow in a matter of minutes. Since all lost dewar liquid boils away to the exchanger shell side, no serious coldbox temperature increases are seen. This ability to maintain a cold exchanger is the main reason for decreased quench recovery time. Liquid level resumes stable regulation about the set point within about an hour and a half.

tuning)

Modest attempts were made at reducing the percent liquid returned out of the tunnel at A1. With known refrigerator heat loads of approximately 560 watts static and 800 watts under ramping conditions, it is possible to find a minimum required mass flow for given 2-phase circuit conditions (latent heat) that will produce pure saturated vapor at the tunnel exhaust.

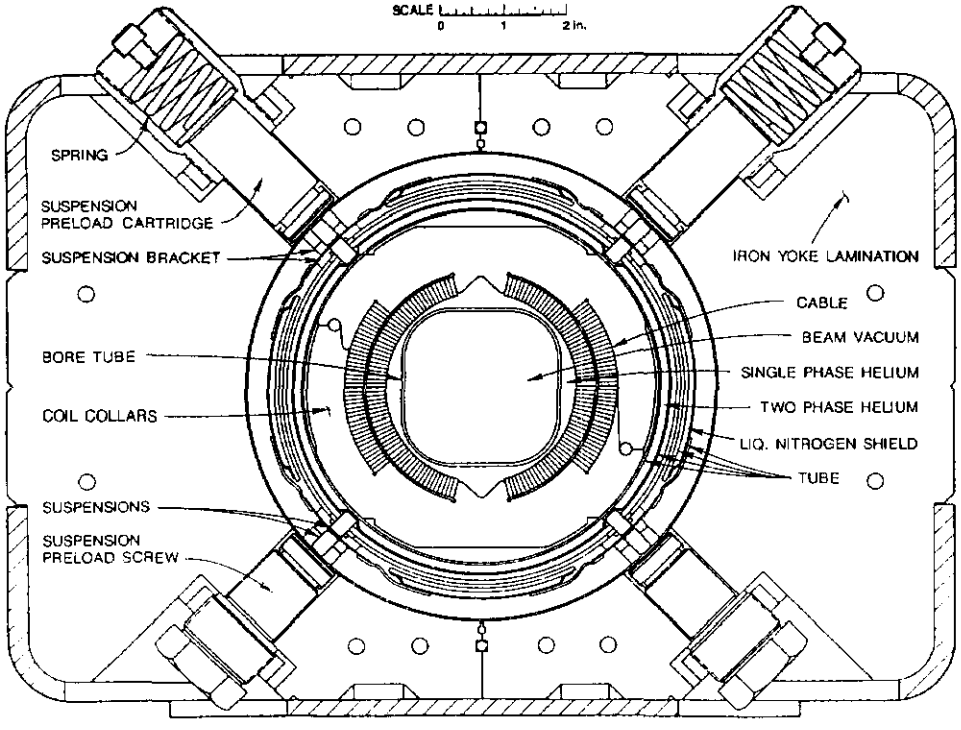

Fig. 6 Dipole cross-section

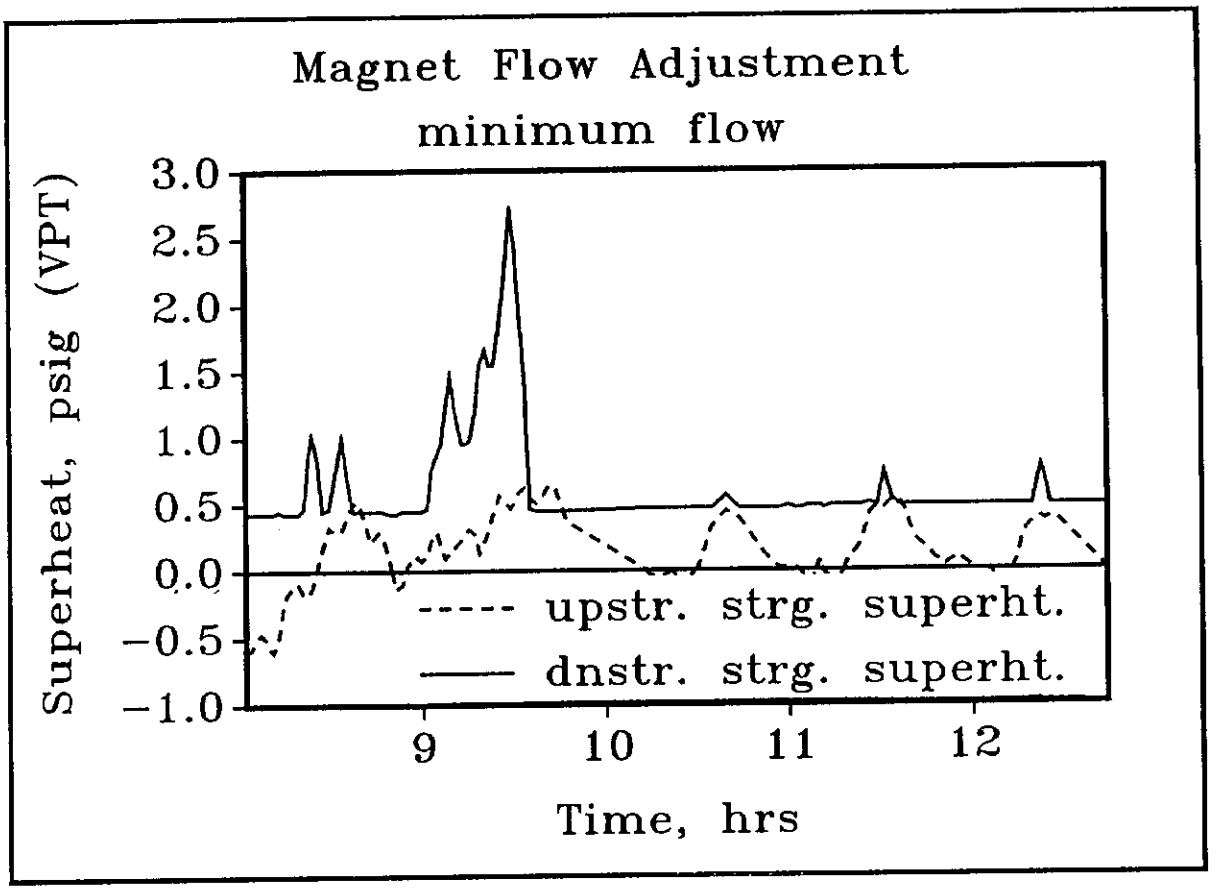

Fig. 7 Tunnel oscillations

A1 typically operates about six to eight grams per second above this minimum, a condition that was arrived at through experience and "feel". Gradual, stepped reduction in tunnel flow resulted in superheated vapor at the tunnel exhaust much earlier than anticipated, when flows were still four or five grams per second above the calculated minimum. As this level was reached, small oscillations (one hour period) were generated during which 2-phase conditions at the tunnel exhaust would be followed by superheated conditions (see fig. 7). This phenomenon was eliminated with a small (one gram per second or less) increase in tunnel flow. At this point the tunnel exhaust flow was 19 percent liquid by mass, compared to roughly 35 percent liquid initially. It is believed that this occurs because of flow stratification in the 2-phase circuit (see fig. 6). As tunnel flows are decreased, velocity falls to the point where any remaining liquid at the end of the 2-phase circuit pools at the bottom of the flow passage where it is periodically swept up in percolating fashion to the shell side of the cold box. This would explain the oscillation in properties of the 2-phase flow. For this reason it may not be possible to completely optimize tunnel flow. Again, due to the critical nature of maintaining accelerator operations, testing could not be pursued in depth.

Conclusions

Based on the need for phase separation capability on the tunnel return flow and the desire to buffer the cold box from tunnel upsets, a 100 liter liquid helium dewar was designed, built, and tested. Fermilab's A1 satellite refrigerator served as the test bed, providing a realistic setting for data acquisition (see fig. 1). As installed, the vessel was transparent to the refrigerator under normal operation, cooldown, and warmup. Phase separation was reliably accomplished once the liquid supply from the Central Helium Liquifier was regulated according to dewar liquid level. With proper adjustment of this control loop, a maximum liquid level bandwidth of ten percent centered about the set point was consistently obtained. Vessel capacity appears adequate and is at a practical maximum given current space limitations anyway. During refrigerator upset conditions, the dewar does indeed cushion the cold box from temperature swings by virtue of its stored latent heat and has measurably decreased refrigerator "glitches" and quench recovery time at A1. Violent upsets (quenches) probably throw liquid droplets out of the dewar low pressure exhaust, requiring special quench protection for a centrifugal cold compressor drawing vapor off of the liquid bath. Even without providing service as a phase separator for a cold compressor, a 2-phase return dewar offers greater reliablilty, decreased quench recovery time, and operation closer to design for a satellite refrigerator. In the future the possibility of installing 2-phase return dewars in all of Fermilab's satellites will be explored.

References

1.) C.H. Rode, Tevatron Cryogenic System, in: "Proc. 12th Inter. Conf. of High Energy Accel." FERMILAB, Batavia, IL 60510, (1983), p. 529.

2.) T.J. Peterson and J.D. Fuerst, Tests of Cold Helium Compressors at Fermilab, in: "Advances in Cryogenic Engineering", Vol. 33, Plenum Press, New York (1988), p. 655.

3.) J.C. Theilacker et al, Control of the Tevatron Satellite Refrigeration System, in: "Advances in Cryogenic Engineering", Vol. 29, Plenum Press, New York (1984), p.437