Fermi National Accelerator Laboratory

TM-1637

Considerations of Bunch-Spacing Options for Multi-Bunch Operation of the Tevatron Collider

G. Dugan
Fermi National Accelerator Laboratory
P.O. Box 500
Batavia, Illinois 60510

December 14, 1989

Operated by Universities Research Association Inc. under contract with the United States Department of Energy

TM-1637

Considerations of bunch-spacing options for multi-bunch operation of the Tevatron collider

G. Dugan

December 14, 1989

0. Summary 1
1. Introduction 1
2. Symmetry considerations and the abort gap 4
3. Constraints due to Main Ring coalescing and beam-beam separation 13
4. Relations between l_0, l_1 and l_2 14
5. Injection schemes 15
   Scheme A: Injection of all proton batches followed by all antiproton batches 16
      Proton injection: 16
      Antiproton injection: 18
   Scheme B: Injection of all antiproton batches followed by all proton batches 21
6. Abort 22
7. Results 23
8. Conclusions 39

Considerations of bunch-spacing options for multi-bunch operation of the Tevatron collider

G. Dugan
December 14, 1989

0. Summary

This discussion will consider a number of points relevant to limitations, advantages and disadvantages of various arrangements of bunches in the Tevatron proton-antiproton collider. The considerations discussed here will be limited to: (a) bunch spacing symmetry and relation to the relative luminosity at B0 and D0 and the beam-beam interaction with separated beams; (b) bunch spacing constraints imposed by Main Ring RF coalescing and the optics of beam separation at B0 and D0; and (c) bunch spacing constraints imposed by injection and abort kicker timing requirements, and by the Antiproton Source RF unstacking process.

1. Introduction

The pattern of bunches assumed in this report will be described in terms of the following definitions:

A batch is a group of equally spaced n_1 bunches, where n_1 is greater than or equal to 1. The bunches in a batch are all spaced at the minimum spacing l_0 (in RF buckets), as shown below in Fig. 1:

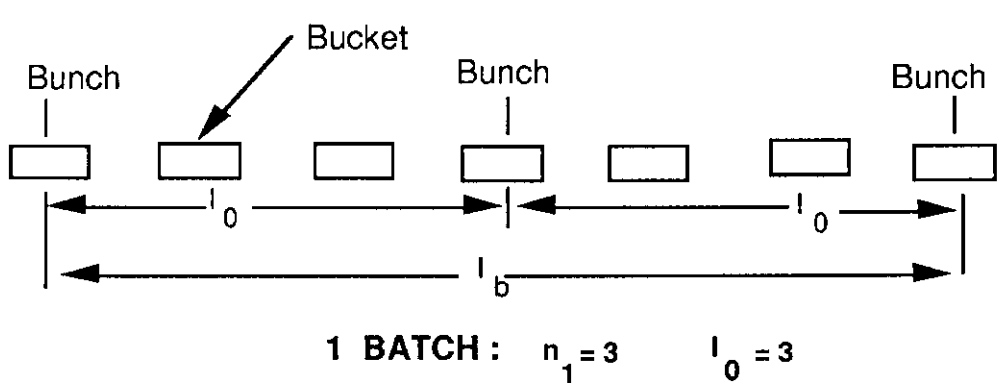

Figure. 1: A single batch

The total length of a batch is $l_b = (n_1-1)l_0$.

The spacing from the end of one batch to the start of the next is the quantity l_1 (in RF buckets).

For purposes of injection, we consider all the bunches in a batch to be injected into the Tevatron at the same time (i.e., on a single Main Ring cycle).

We assume three-fold symmetry, so that we fully describe the ring by specifying 1/3 of it (in section 2, the consequences of breaking this symmetry are discussed). The number of batches in 1/3 of the ring is the quantity n_2. The number of buckets from the end of the last batch to the end of the 1/3 ring is labelled l_2; in general, this is different from l_1. Because there are l_s = 1113/3 = 371 buckets in 1/3 of the ring, we must have:

$$l_s = (n_{2-1})l_1 + n_2 l_b + l_2 = n_2(n_1-1)l_0 + (n_2-1)l_1 + l_2. \quad (1)$$

The total number of bunches in the ring is $B=3n_1n_2$. One-third of the ring can be represented by the diagram shown below in Fig. 2:

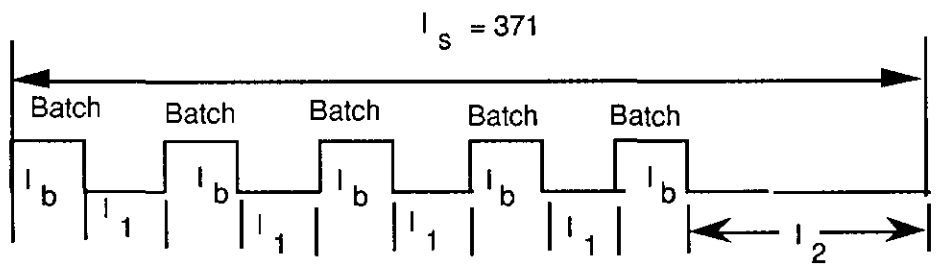

One-third of the ring
n_2= 5

Figure 2.

The entire ring is represented in Fig. 3. In this figure, the symmetry points in the bunch pattern (which must correspond to the centers of the B0, D0 and F0 straight sections) are located a distance

$$l_c = 1/2(l_s-l_2) = 1/2(n_2 l_b + (n_2-1)l_1)$$

from the beginning of the "1/3 ring" pattern. This is illustrated in Fig. 3. This also implies that A0 is in the center of the gap formed by the l_2 empty bunches between F0 and B0.

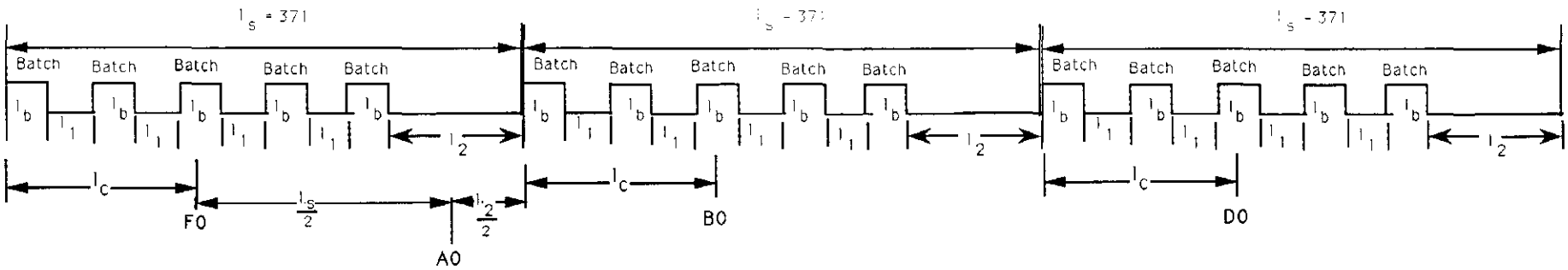

Figure 3: The full ring

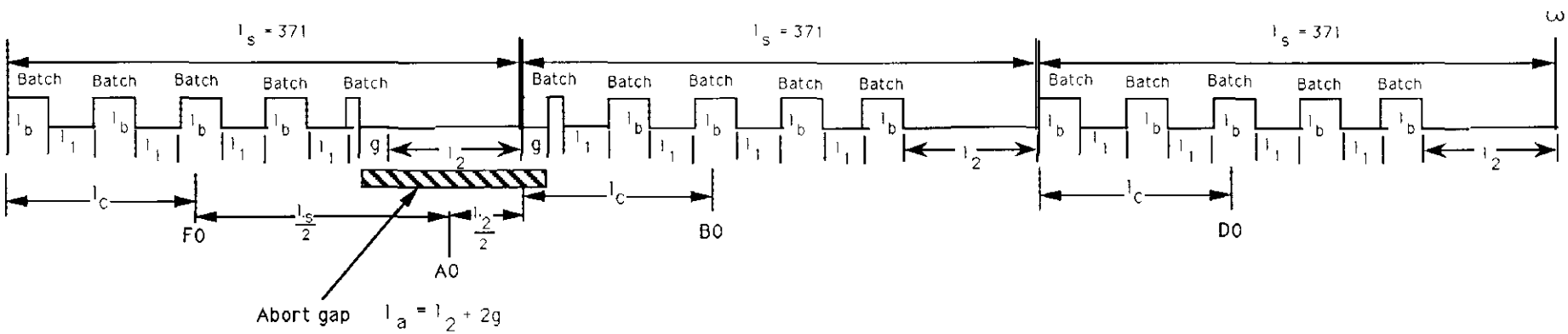

Figure 5: The full ring showing the abort gap

The entire ring can also be represented by the diagram shown in Fig. 4 below, which corresponds to the specific case of $n_2 = 1$:

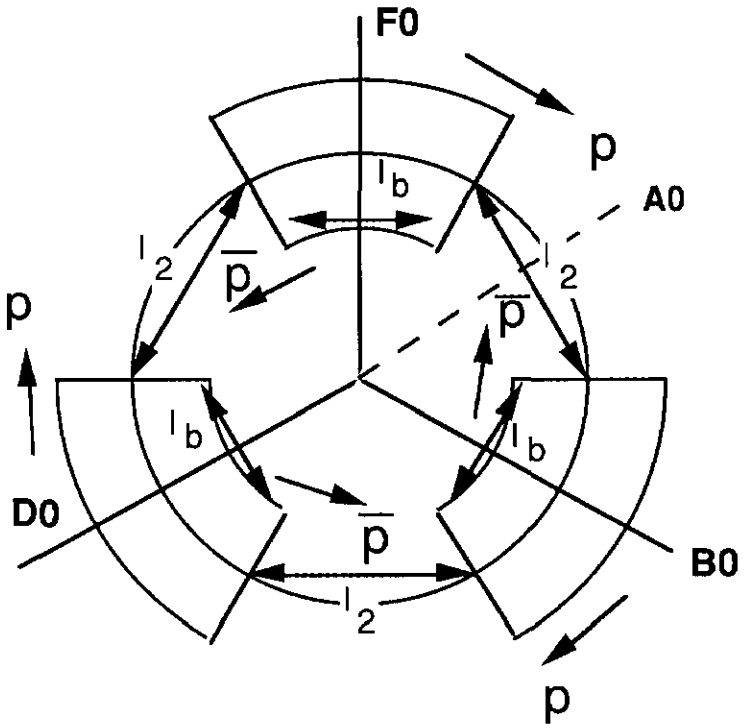

Figure 4: The entire ring

2. Symmetry considerations and the abort gap

The above discussions illustrate a situation which is completely three-fold symmetric. (It is assumed that the bunch pattern is identical for protons and antiprotons.) There may be reasons to break this symmetry. A gap in the bunch pattern is required for the abort kicker at A0 to rise when beam abort is necessary. This gap is called the abort gap (its length in RF buckets will be designated l_a). In a three-fold symmetric situation, it is naturally provided by the l_2 empty buckets whose center is located at A0, as shown in Fig. 3. The same gap can also be used to load the proton and antiproton bunches into the collider at 150 GeV; it is repositioned appropriately for injection by the injection point cogging hardware. Although the injection kicker rise times are determined by the minimum bunch separation, independent of the abort gap, the fall times are related to the length of the abort gap (see section 5 for a more detailed exposition). The quantity l_2 naturally gets smaller and smaller as the number of bunches increases, for a fixed minimum bunch spacing.

For large numbers of bunches, then, in order to ease the requirements on the injection kicker fall times and the abort kicker rise time, one may consider artificially lengthening the abort gap. This can be done by leaving out some of the bunches in the two batches on either side of the l_2 empty buckets whose center is located at A0. This is shown diagrammatically in Fig. 5.

Deletion of the bunches from the two batches must be done symmetrically about A0 in order to preserve the symmetry about this point required by the abort kicker. If we leave out n_g bunches in each batch, the number of empty buckets added to the abort gap is $g = n_g l_0$ on each side. In this situation, the abort gap is extended to $l_a = l_2 + 2g$. This situation will be referred to as the "symmetric extended abort gap". It provides more time for the injection kickers to fall and for the abort kicker to rise but breaks the three-fold symmetry of the bunch pattern.

There are several consequences of a break in the three-fold symmetry of the bunch pattern; they are all related to how the bunches interact. The pattern of interactions of the bunches when a symmetric extended abort gap is present is illustrated in Fig. 6 below:

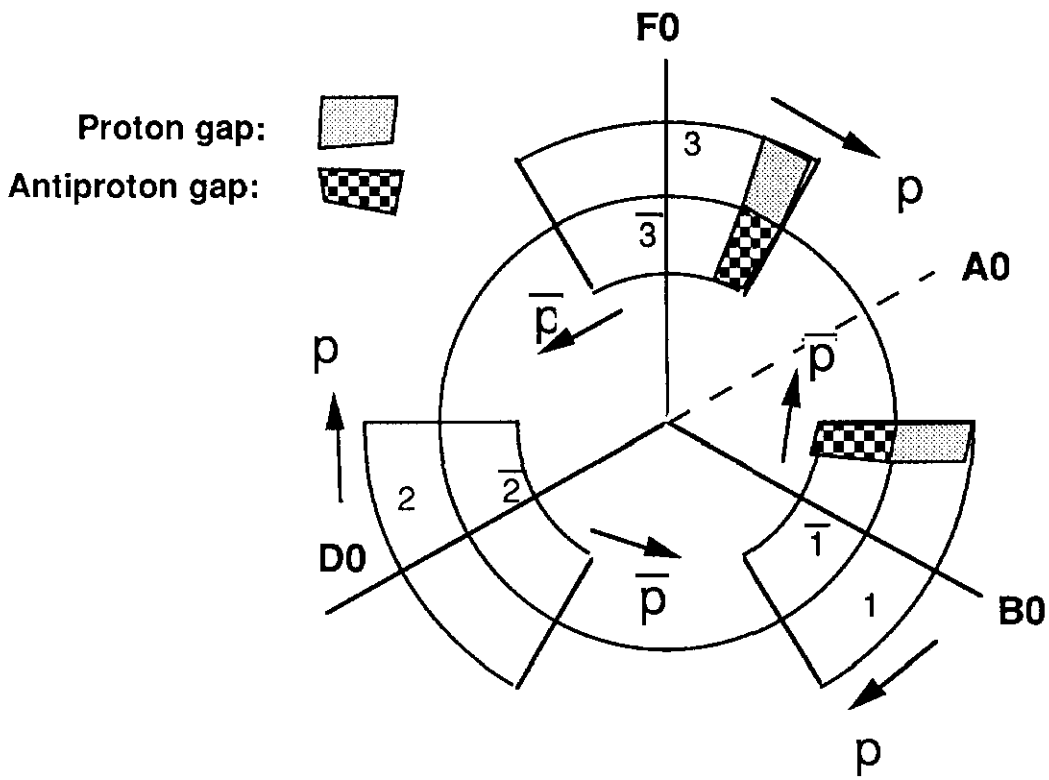

Figure 6: Three batches with an extended abort gap

This figure corresponds to the specific case of $n_2 = 1$, as in Fig. 4. However, the general remarks regarding the consequences of a break in the three-fold symmetry due to a symmetric extended abort gap are well illustrated by this situation. The batches are labelled 1,2,3 for the protons and $\bar{1}$, $\bar{2}$, $\bar{3}$ for the antiprotons. Initially, as shown in fig. 6, we have collisions of batches 1x $\bar{1}$ at B0 and 2x $\bar{2}$ at D0. After 1/3 of a turn, the situation is as shown in fig. 7:

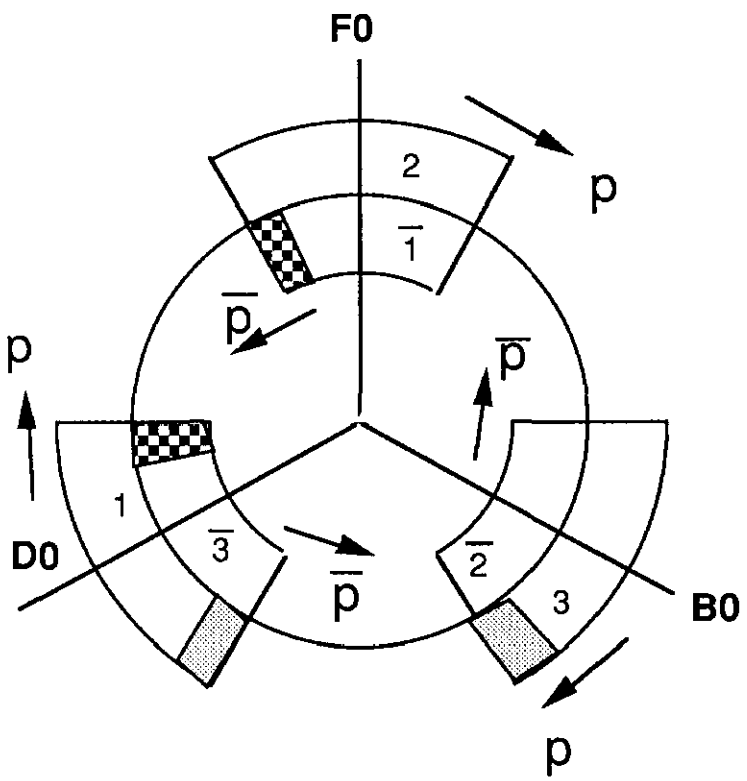

Figure 7: Figure 6 after 1/3 turn

This figure corresponds to batches 3x $\bar{2}$ colliding at B0 and 1x $\bar{3}$ colliding at D0. After another 1/3 of a turn, the situation is as shown in fig. 8:

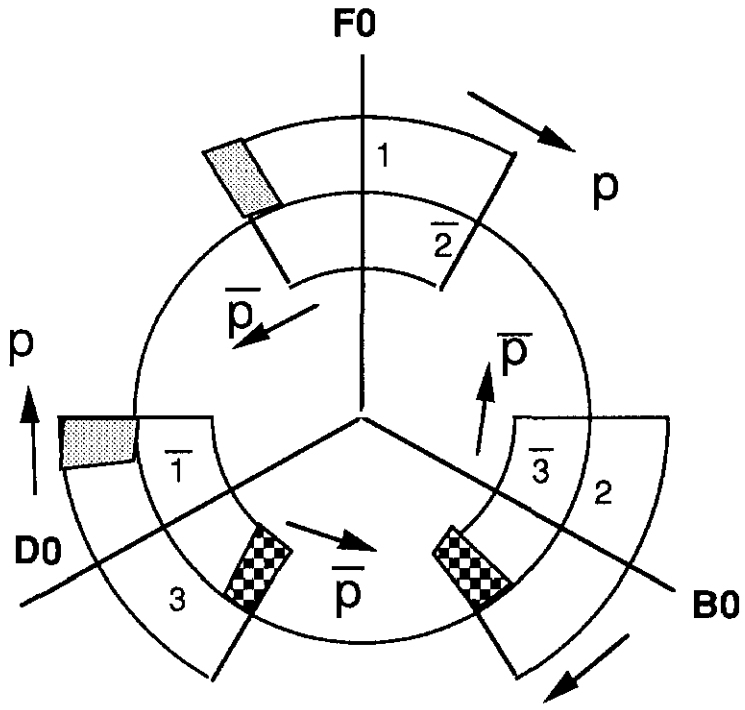

Figure 8: Figure 6 after 2/3 turn

Here we have batches 2x $\bar{3}$ colliding at B0 and batches 3x $\bar{1}$ colliding at D0.

In order to evaluate the number of bunches colliding at B0 and D0 in each of these situations, it is useful to refer to Fig. 9. This figure is essentially a space-time diagram for the batches shown in figs. 6 through 8 above. Space (distance around the ring) is plotted on the horizontal axis, and time (in units of ring revolutions) is plotted on the vertical axis. Proton batches (1,2,3) move diagonally up to the right in this diagram, and antiproton bunches ($\bar{1}$, $\bar{2}$, $\bar{3}$) move diagonally up to the left. Each batch is delineated by a band between two cross-hatched thin lines; the batch centers are shown as dotted lines. The dark cross-hatched areas indicate the regions associated with a symmetric extension of the abort gap. The intersections of the proton and antiproton batches at B0 and D0 are shown by the dark-outlined diamonds, which are labelled to show which batches are intersecting in each case.

The number of bunches which collide in each of the diamond-shaped regions is proportional to the length of the line along the time axis not included in a dark cross-hatched area (where there are no bunches). A diamond with no dark cross-hatching (e.g., the diamond "2x $\bar{2}$" at D0) corresponds to n_1 bunches colliding (the total number

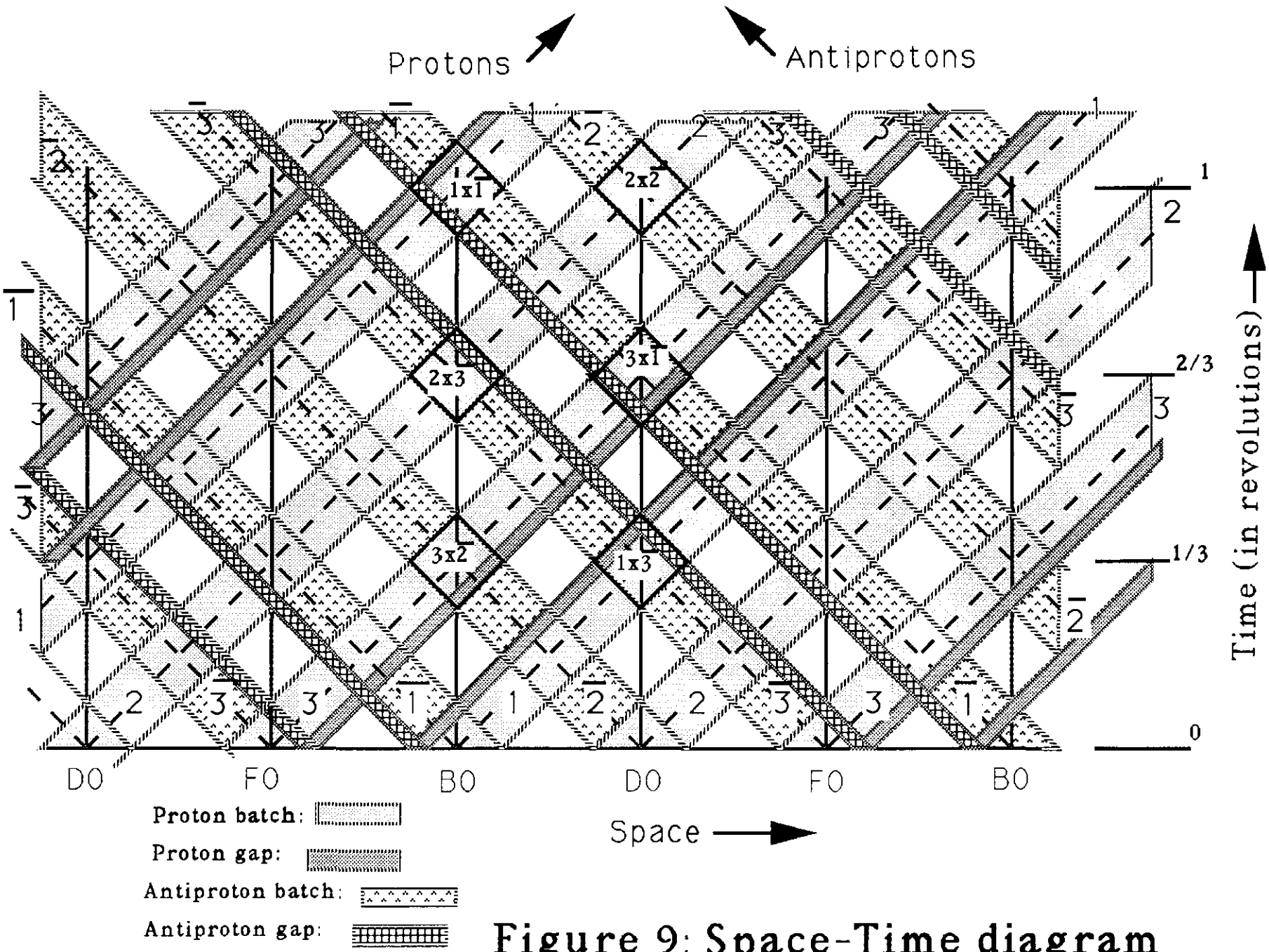

Figure 9: Space-Time diagram

of bunches is $B=3n_1n_2$, and $n_2 = 1$). For every cross-hatched region appearing in a diamond, we must subtract n_g bunches from n_1. Using these rules, we can make Table 1 showing how many bunches collide at each batch intersection and at each collision point:

Batch crossing	Collision Point	Number of bunches colliding
$3 \times \bar{2}$	B0	$n_1 - n_g$
$2 \times \bar{3}$	B0	$n_1 - n_g$
$1 \times \bar{1}$	B0	$n_1 - 2n_g$
TOTAL	B0	$B - 4n_g$
$1 \times \bar{3}$	D0	$n_1 - n_g$
$3 \times \bar{1}$	D0	$n_1 - n_g$
$2 \times \bar{2}$	D0	n_1
TOTAL	D0	$B - 2n_g$

Table 1: Numbers of bunches colliding at B0 and D0 for each batch crossing with a symmetric extended abort gap

Note that for the first two batch crossings at D0, although there are two gaps one only looses n_g bunches each time because the gaps "collide". The total number of bunches colliding at each interaction point is just the sum indicated in the above table, where we have used $B=3n_1$.

For a fixed proton bunch intensity, the luminosity at each interaction point is proportional to the number of bunches colliding (B_c) times the antiproton intensity per bunch $\bar{N}_p$: that is, $\mathcal{L} \propto \bar{N}_p B_c$. Without the symmetric extended abort gap, $B_c = B$ and $\bar{N}_p = \bar{P}/B$, where $\bar{P}$ is the total available antiproton intensity; hence $\mathcal{L} \propto \bar{P}$. With a symmetric extended abort gap, the number of bunches is now $B - 2n_g$ (since we leave out $2n_g$ bunches) and therefore $\bar{N}_p = \bar{P}/(B - 2n_g)$. Using the values for B_c from the above table, we conclude that the luminosity at D0 with a symmetric extended abort gap is $\mathcal{L} \propto \bar{P}(B - 2n_g)/(B - 2n_g) = \bar{P}$. This is the same as without an extended abort gap. However, at B0 the luminosity is $\mathcal{L} \propto \bar{P}(B - 4n_g)/(B - 2n_g) = \bar{P}R_g$, where $R_g = (B - 4n_g)/(B - 2n_g) = 1 - (2n_g)/(B - 2n_g) < 1$. Hence one consequence of a symmetric extended abort gap is a reduction in the luminosity at B0 (but not at D0) from the case of no extended gap by the fraction R_g.

Another consequence of the break in the 3-fold symmetry due to the symmetric extended abort gap is related to the beam-beam interaction. This can also be seen by looking at Fig. 9. If we consider one of the proton bunches in, for example, batch number 3 as it travels around the ring starting at F0, the encounters it makes with antiproton bunches in batches $\bar{1}$, $\bar{2}$, and $\bar{3}$ can be seen clearly in Fig. 9 by simply following the diagonal band corresponding to proton batch 3 upward to the right. We can see that a proton bunch in this batch will see n_1 antiproton bunches at each antiproton batch crossing except for the crossings near A0, C0, D0 and F0 (where the proton bunch encounters an extension of the abort gap and so misses n_g bunches each time). Because the beams are separated except at the exact centers of the B0 and D0 IR's, in all cases these "misses" would be misses of long-range beam-beam interactions. Hence a proton bunch in batch 3 has 2 head-on and $(6n_1-4n_g-2)$ long-range interactions per turn.

Similarly, we can follow an antiproton bunch in batch $\bar{2}$ starting from D0: it misses n_g proton bunches at C0, B0, F0 and E0 due to the extended abort gap. These are all long-range interactions except if the antiproton bunch happens to be one of the n_g bunches on the left edge of batch $\bar{2}$ in Fig. 9: in this case, one of the proton bunches which it misses at B0 is a head-on interaction (since it occurs exactly on the solid line in Fig. 9 corresponding to the center of the B0 straight section). Thus, for the n_g antiproton bunches on the left edge of batch $\bar{2}$, there will be 1 head-on interaction and $(6n_1-4n_g-1)$ long-range interactions per turn; for the rest (n_1-n_g) of the antiproton bunches in batch $\bar{2}$, there will be 2 head-on and $(6n_1-4n_g-2)$ long-range interactions per turn.

Using this procedure, we can construct Table 2 which specifies what happens to the bunches in each of the six batches during one revolution in the presence of a symmetric extended abort gap:

Batch	Number of bunches	Number of long-range interactions per turn	Number of head-on interactions per turn
1	n_1-2n_g	$6n_1-4n_g-2$	2
	n_g	$6n_1-4n_g-1$	1
2	n_1-n_g	$6n_1-4n_g-2$	2
	n_g	$6n_1-4n_g-1$	1
3	n_1-n_g	$6n_1-4n_g-2$	2
TOTAL	$3n_1-4n_g$	$6n_1-4n_g-2$	2
	$2n_g$	$6n_1-4n_g-1$	1
$\bar{1}$	n_1-2n_g	$6n_1-4n_g-2$	2
	n_g	$6n_1-4n_g-1$	1
$\bar{2}$	n_1-n_g	$6n_1-4n_g-2$	2
	n_g	$6n_1-4n_g-1$	1
$\bar{3}$	n_1-n_g	$6n_1-4n_g-2$	2
TOTAL	$3n_1-4n_g$	$6n_1-4n_g-2$	2
	$2n_g$	$6n_1-4n_g-1$	1

Table 2: Numbers of head-on and long-range interactions experienced by the bunches in each batch when a symmetric extended abort gap is present.

Thus, for both protons and antiprotons the situation is the same: $B-4n_g$ bunches have $6n_1-4n_g-2$ long-range interactions and 2 head-on interactions per turn; $2n_g$ bunches have $6n_1-4n_g-1$ long-range interactions and 1 head-on interaction per turn. The fraction of the total number of bunches which suffer only 1 head-on interaction per turn is $2n_g/(B-4n_g)$; note that this is the same fraction by which the B0 luminosity is reduced. Since the bulk of the beam-beam effects are due to the head-on interactions, the beam-beam interaction will be only roughly half as strong for these $2n_g$ bunches as for the others, and they will have only part of the tune shift which the other bunches experience. We anticipate using independent tune control for each bunch species to compensate for the beam-beam tune shift experienced by the majority of the bunches; this will mean that we will be overcompensated for the $2n_g$

bunches which collide only once. This may or may not be a problem, depending on the magnitude of the overcompensation in comparison with the inevitable beam-beam tune spread.

At this time, it is not clear how serious these consequences of the breaking of the bunch pattern three-fold symmetry are, in comparison with the advantages gained in injection kicker fall times and abort kicker rise time. This question will probably only be answered experimentally. Therefore, we will plan on providing the ability to operate both in the symmetric situation (i.e., with no extension of the abort gap) and also in the situation with a symmetric extended abort gap, which provides the possibility of either less stringent kicker timing requirements or a larger number of bunches with roughly the same kicker timing requirements.

Two final comments are probably worth making. First of all, the above discussion only considers extensions of the abort gap which are symmetric about A0; this is because this symmetry is required for the abort kicker. However, as the discussion below on kicker timing will explain, extensions of the abort gap are also useful for providing more time for injection kicker fall times. In this case, symmetry about A0 is irrelevant, because of the freedom provided by injection cogging. Hence an <u>asymmetric</u> extension of the abort gap (e.g., gaps in proton batch 1 and antiproton batch $\bar{1}$ only) can help with injection (but not abort) kicker requirements. The advantage here is that an <u>asymmetric</u> extended abort gap can be constructed in such a way as NOT to introduce a difference in the luminosities at B0 and D0 (although the problem of having some bunches see only 1 head-on interaction per turn cannot, of course, be avoided). There may be some situations in which this is desirable, but it will not be further explored in this discussion. The detailed formulas for this case can in fact be rather easily deduced following similar considerations as those given above for the symmetric extended abort gap case.

The second comment regards a variant of the symmetric extended abort gap. Referring to figure 6, one may imagine a situation in which there are (equal) gaps only associated with proton batch 3 and antiproton batch $\bar{1}$ (or, alternatively, only proton batch 1 and antiproton batch $\bar{3}$). This is essentially still a situation which is symmetric about A0 as far as the abort kicker is concerned. In fact, if the length of each of these gaps is 2g, then the abort gap length is effectively extended to $l_2 + 2g$. It is also true that all of the above relations for relative luminosity at B0 and D0, and the relations related to the number of beam-beam interactions, are still

valid (this can be seen simply by considering figure 9 modified appropriately for this situation). One advantage of this variant is that only one of the batches of each species must be modified (i.e., some bunches left out) to extend the abort gap; this may prove to have some operational benefits.

3. Constraints due to Main Ring coalescing and beam-beam separation

Because of the requirements on coalescing in the Main Ring, we must have $l_0 = hn$, where h=21 and n must be an integer greater than or equal to 1. Also, since we can at most have $Bl_0 < 1113$, this means that $Bhn < 1113$, $n < 1113/B/h = 53/B$. Thus n can range from 1 to the largest integer equal to or less than 53/B; since n must be greater than or equal to 1, B must be less than or equal to 53.

The Main Injector is planned to have a harmonic number of 588 = 21x14x2. Hence, it is conceivable to imagine a coalescing scheme utilizing h=14, suitable perhaps for coalescing fewer, more intense, bunches. In this case the upper limit on B rises to 79 (and l_0 = 14 : about 250 nsec.)

There is, however, an additional constraint imposed on l_0. This is related to the optics of the beam-beam separation at B0 and D0. In the current design, the proton and antiproton closed orbits, which of course intersect at B0 and D0, are not separated by the required 5σ until approximately ± 58 m on either side of the IP. Thus, to maintain 5σ beam separation at the crossing points adjacent to B0 and D0, we must require that half the minimum bunch spacing (which is the distance between adjacent crossing points) be greater than 58 m. The RF wavelength is 5.65 m, so in units of RF buckets this constraint is

$$l_0/2 \geq 58/5.65 = 10.3,$$
$$l_0 \geq 21.$$

Thus $l_0 = 14$ is ruled out by this constraint. In principle, however, we may be able to get around this by introducing a crossing angle at the IP using the separators, which provides a more rapid separation of the beams. The details of such a scheme have yet to be worked out; hence, for the rest of this discussion, we will take $l_0 = 21$ as the minimum bunch spacing.

4. Relations between l_0, l_1 and l_2

The relation between l_1 and l_2 is given by the above equation (1). This can be considered to be a line in (l_1,l_2) space of the form:

$$N_1 = 371-N_0 = (n_2-1)l_1 + l_2, \quad (2)$$

$$\text{where} \qquad N_0 = n_2hn(n_1-1).$$

If $n_2 = 1$, then l_1 has no meaning and $l_2 = N_1$. If n_2 is greater than 1, then there are families of solutions as shown in Fig. 10:

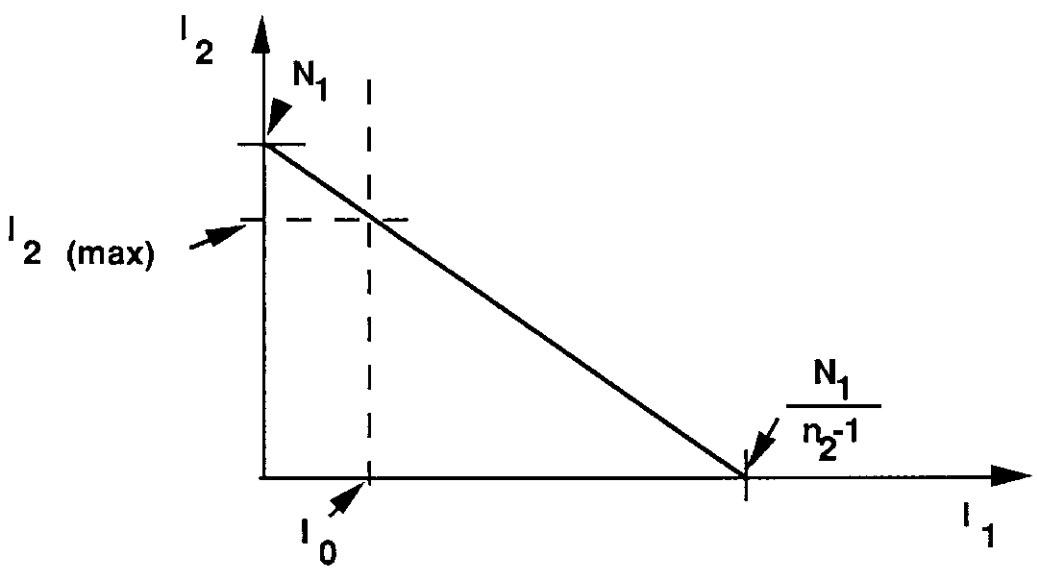

Figure 10: Relations between l_1 and l_2

The solutions lie along the line shown, at integral values of l_1 and l_2. The line connects the points $(l_1,l_2) = (N_1/(n_2-1),0)$ and $(0,N_1)$.

By definition, we must require that l_1 be at least as large as l_0, the minimum bunch separation. Thus the largest possible value for l_2 will be given by $l_1 = l_0$. From equation (2) above, this implies that

$$N_1 = (n_2 -1)l_0 + l_2 = 371 - n_2(n_1 -1)l_0,$$
$$l_2 = 371 - l_0(n_1n_2 - 1),$$
$$l_2 = 7(53 - n(B-3))$$

where the latter result follows using $l_0 = 21n$. As will be discussed below, in general the maximum value of l_2 makes the abort gap the largest and hence will be the most favorable situation from the point of view of injection and abort kickers. Thus, we will choose this value for l_2, with the consequence $l_1 = l_0$.

Two points can be made with regard to this choice:

1. Both l_1 and l_2 are multiples of 7. The result of this is that the set of all RF buckets in which bunches can be found is reduced from 1113 to 1113/7=159. These 159 buckets are equally spaced around the ring and appear at a given azimuth with the same frequency as that of the TVBS clock (about 7.5 MHz). This constraint introduces a symmetry which may be valuable to (detector and accelerator) hardware which must synchronize with beam-beam collisions.

2. Since $l_0 = l_1$, for a given n, the bunch pattern is identical for any values of n_1 and n_2 for which $n_1 n_2 = B/3$ is the same. Thus all patterns look the same as one for which there is only one batch per third of the ring (i.e., $n_2 = 1$). However, the concept of multiple batches per third is still useful in connection with injection. To fill the ring, we need to inject $3n_2$ times, since we have defined a batch to be the fundamental unit for injection. We may now consider n_1 and n_2 to be different for protons and antiprotons, implying different injection schemes, as long as their product is the same. As will be illustrated below, this can be advantageous, since the case of $n_2 = 1$, $n_1 = B/3$, results in less restrictive injection kicker rise time requirements, and the minimum number of injection cycles. This should be able to be realized for protons, but not for antiprotons, because $n_1 > 4$ is very difficult for antiprotons (see section 5 for more on this subject).

5. Injection schemes

The fundamental unit for injection will be the batch, consisting of n_1 bunches. The total number of batches is $3n_2$; this is therefore equal to the number of injection cycles (for a given particle species).

The space in the ring available for injection of a batch will be called the injection gap. Since the space available in the ring for injection depends on the number (and particle species) of batches already in the ring, the injection gap starts out at 1113 RF buckets and decreases as more batches are injected. The minimum value of the injection gap is the value which sets the most stringent requirements on the injection kicker rise and fall times, so this is the value which determines the kicker design requirements. As the

discussion below will show, this value is directly related to the length of the abort gap.

Scheme A: Injection of all proton batches followed by all antiproton batches.

This is the scheme which is favored operationally because of the scarcity of antiprotons.

Proton injection:

The general case for the injection of the last proton batch is shown in the figures 11-14:

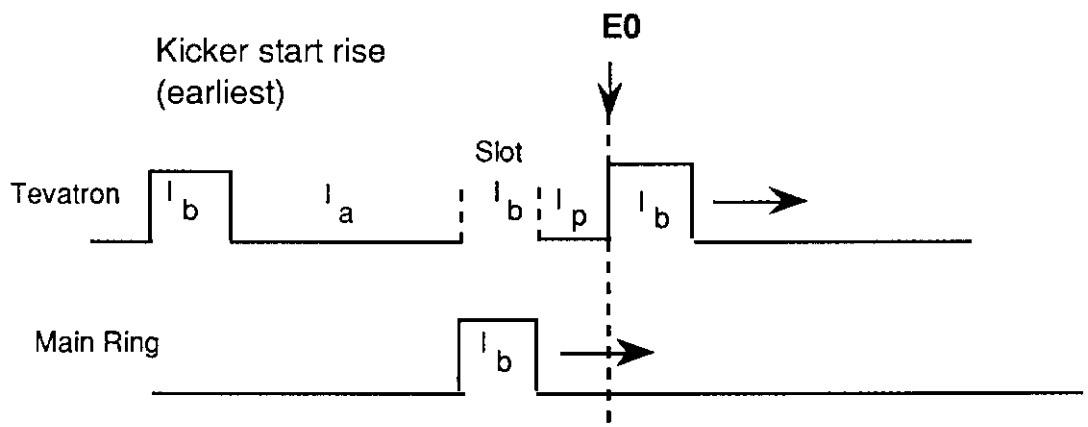

Figure 11: Proton injection kicker start rise

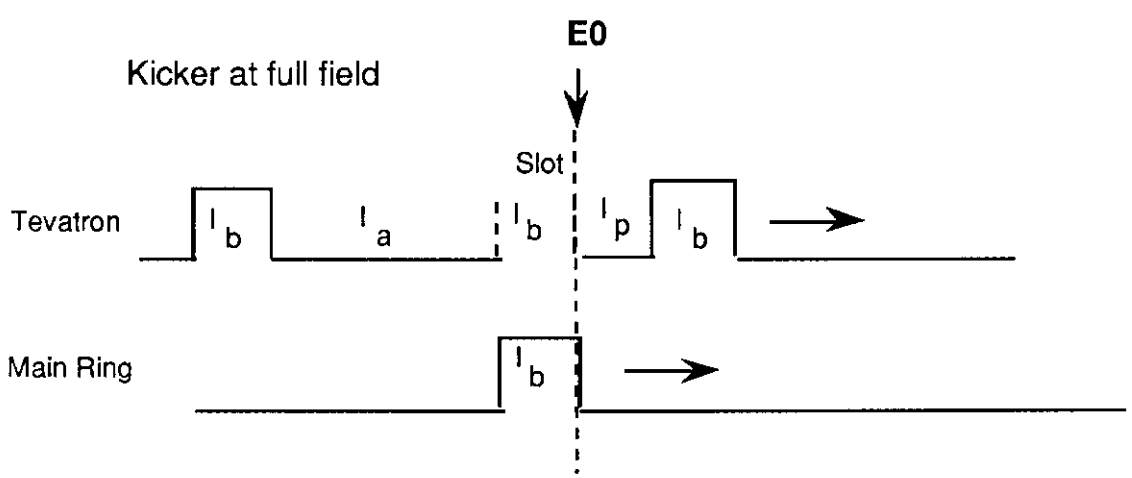

Figure 12: Proton injection kicker at full field

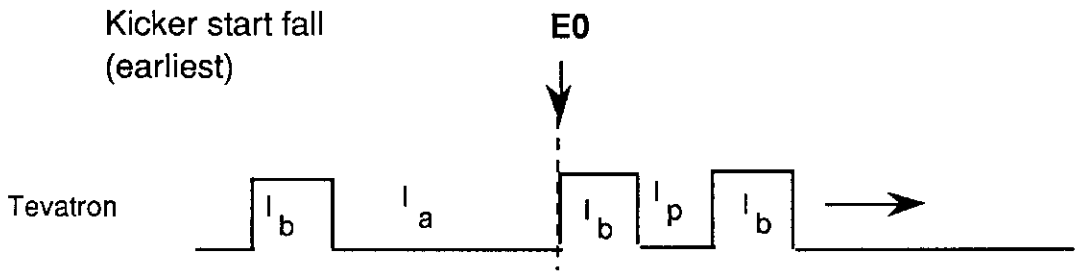

Figure 13: Proton injection kicker start fall

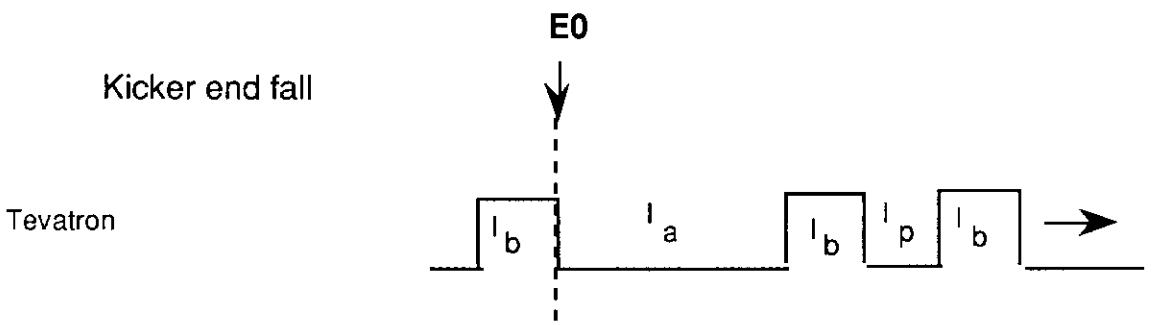

Figure 14: Proton injection kicker end fall

The quantity l_p in the above diagrams is essentially the required spacing between the batches. Thus:

$$l_p = l_1 \text{ if } n_2 > 1$$

$$l_p = l_2 \text{ if } n_2 = 1.$$

From the above figures, we can see that the kicker rise time l_R, flat top l_T, and fall time l_F, must satisfy the requirements:

$l_R = l_p - \delta_1$; where δ_1 is arbitrary in the range $l_p \geq \delta_1 \geq 0$;

$l_T = l_b + \delta_2$; where δ_2 is arbitrary in the range $l_a \geq \delta_2 \geq 0$;

$l_F \leq l_a - \delta_2$.

To ease the rise time requirement, we want l_p to be as large as possible and $\delta_1 = 0$. In general, $l_2 > l_1$, which is why injecting a batch with $n_2 = 1$ is the least demanding arrangement for the injection kicker rise time. In this case, the large gap (l_2) between thirds of the ring is used for the kicker to rise. The fall time is eased by making $\delta_2 = 0$ (i.e., no more flat top than is necessary) and by making l_a as large as possible (i.e., an extended abort gap).

Antiproton injection:

After proton injection, the protons are injection cogged to line up the abort gap as shown in the figures below. The general case for the injection of the antiprotons using the abort gap is shown in figures 15-18:

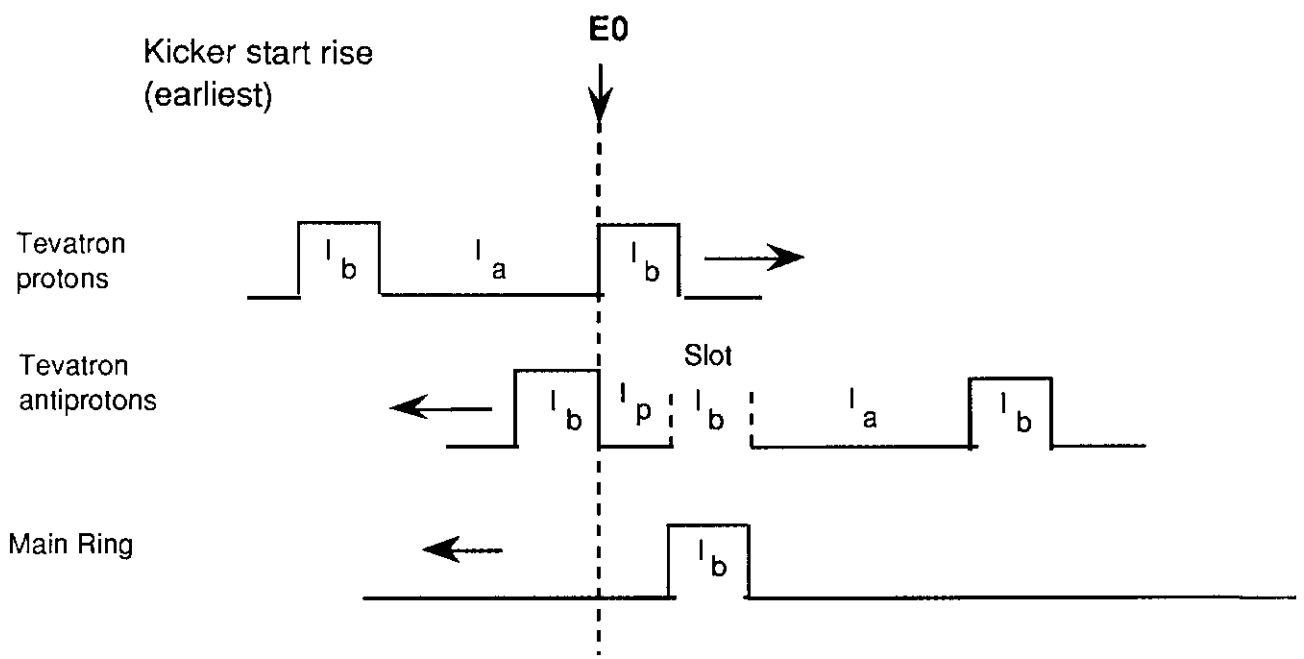

Figure 15: Antiproton injection kicker start rise

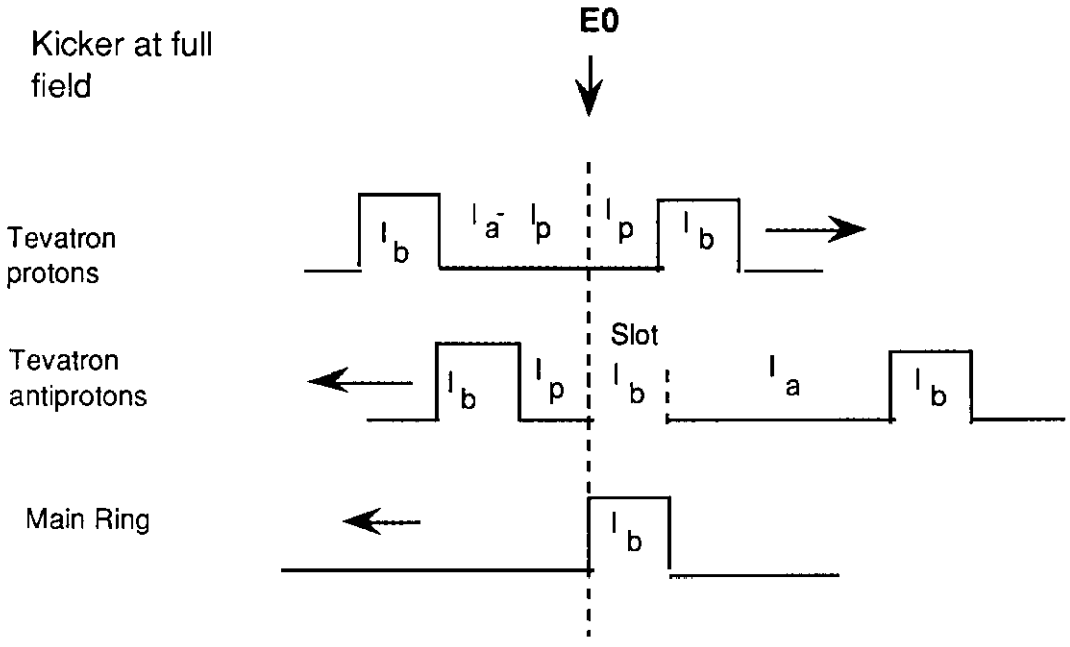

Figure 16: Antiproton injection kicker at full field

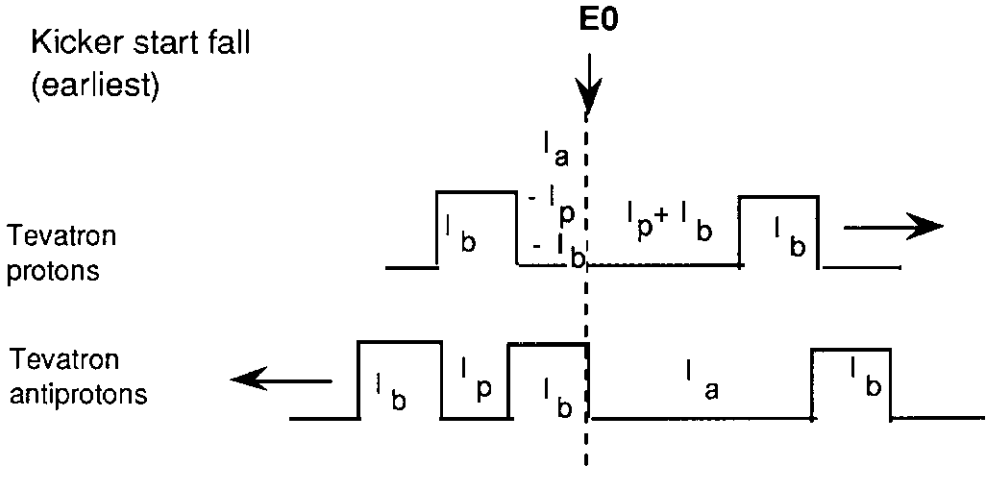

Figure 17: Antiproton injection kicker start fall

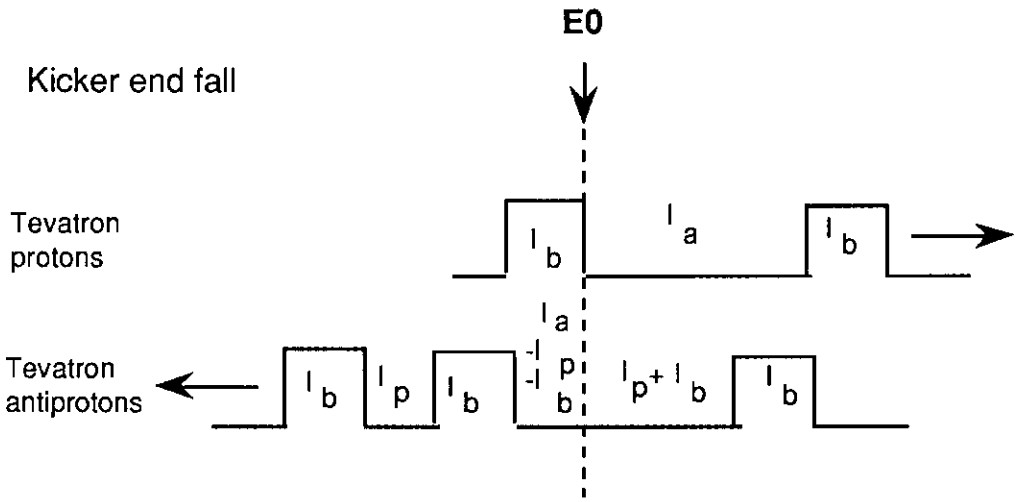

Figure 18: Antiproton injection kicker end fall

In these figures, l_p has the same meaning as in the proton injection figures. From the above figures, we can see that the kicker rise time l_R, flat top l_T, and fall time l_F, must satisfy the requirements:

$$l_R = l_p - \delta_1 \text{ ; where } \delta_1 \text{ is arbitrary in the range } l_p \geq \delta_1 \geq 0;$$

$$l_T = l_b + \delta_2 \text{ ; where } \delta_2 \text{ is arbitrary in the range } l_a - l_b - l_p \geq \delta_2 \geq 0 .$$

$$l_F \leq l_a - l_b - l_R - \delta_2 ;$$

$$l_F \leq l_a - l_b - l_p + (\delta_1 - \delta_2) .$$

The requirement is basically $(l_R + l_T + l_F) \leq l_a$, since the kicker must fit into the abort gap. As in the case of proton injection, we ease the rise time requirement by maximizing l_p ; however, in this case the fall time requirement is thereby made more stringent. Generally, fast kicker fall time requirements are more difficult to satisfy than rise time requirements, so for antiproton injection in this scheme we want l_p to be small, which implies $n_2 > 1$ (i.e., $l_p = l_1$). The fall time requirement is eased by making the flat top no longer than necessary ($\delta_2 = 0$), making the batch short (n_1 small and n_2 large), and, as in the case of the proton injection kicker, by making the abort gap as large as possible (an extended abort gap). The fall time requirement may be further eased by making the rise time less than

l_p (i.e., $\delta_1 > 0$). Essentially, we can trade off faster rise time for slower fall time.

Scheme B: Injection of all antiproton batches followed by all proton batches.

In this scheme, the roles of the protons and antiprotons in the above discussion are simply reversed. One of the disadvantages, of course, is that the antiprotons must remain in the Tevatron all during proton injection, and any problems occurring during proton injection might cause loss of some or all of the antiprotons.

On the other hand, there is a significant advantage to this scheme. For the antiprotons, we now want $n_2 = 1$ and $n_1 = B/3$; the rise and fall times for the antiproton injection kicker are much less demanding than in scheme A. The proton injection kicker now has the demanding requirements. However, the transverse dynamics of proton and antiproton injection into the Tevatron are not symmetric; the antiproton kicker must deliver a substantially larger kick than the proton injection kicker. Thus, in this scheme, the stronger kicker has the less demanding timing requirement, which is of course the desirable situation.

However, there is a real problem with the requirement $n_1 = B/3$ for the antiprotons in the case of $B > 12$. Since the Accumulator ring has $h = 84$ @ 53 MHz, for $l_0 = 21$ RF buckets a maximum of $n_1 = 84/21 = 4$ bunches can be assembled as a single batch in the Accumulator for transfer into the Main Ring. Thus, for $B > 12$, to achieve $n_2 = 1$ (i.e., $n_1 > 4$) requires loading at least two Accumulator batches into the Main Ring adjacent to each other to form a single $n_1 > 4$ batch. This batch can then be accelerated on one Main Ring cycle to 150 GeV for injection into the Tevatron. There are, however, at least two problems with this. First, it requires a new fast rise ($l_R \leq l_1$) antiproton injection kicker in the Main Ring; the existing 8 GeV antiproton injection kicker is not fast enough. Second, it requires at least 2 unstacking cycles of the Antiproton Source; typically these cycles last at least 1 second each, so the antiproton batch which is first injected into the Main Ring must coast at 8 GeV for 1 second or more, during which some loss may be expected due to the poor 8 GeV Main Ring lifetime.

On balance, the disadvantages associated with antiproton injection before proton injection seem to outweigh the advantages; hence in the conclusions of this report only injection scheme A will be discussed.

6. Abort

We consider here only the case of an abort gap of length l_a, which is symmetric about A0. In fact, if the gap is extended asymmetrically, the simple relation derived below is still valid if one substitutes for l_a that part of the gap which is symmetric at A0.

The general situation is shown in figures 19 and 20:

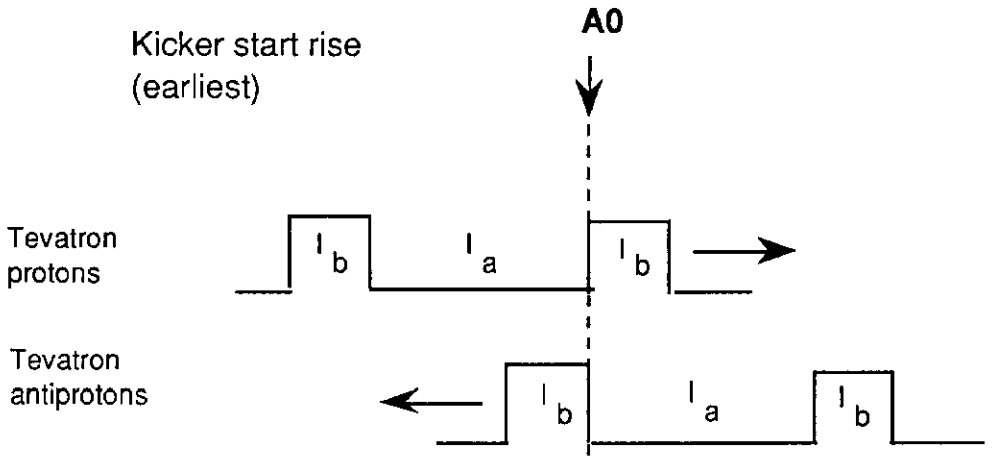

Figure 19: Abort kicker start rise

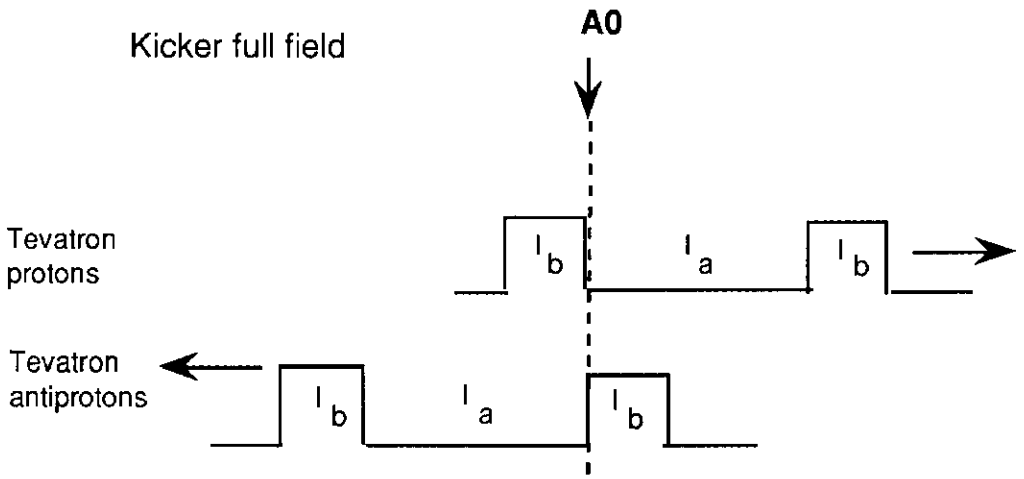

Figure 20: Abort kicker at full field

From these figures it is clear that the abort kicker rise time l_R is simply required to be less than or equal to the abort gap:

$$l_R \leq l_a .$$

7. Results

The results of a computer calculation incorporating all of the above considerations is presented in Tables 3 through 17. These tables are grouped into 5 sets of three tables each (3,4,5; 6,7,8; 9,10,11; 12,13,14; 15,16,17). Each set corresponds to a particular value of the extended abort gap parameter n_g, ranging from 0 (the symmetric situation) to 4. In calculating the kicker times from the relations presented in sections 5 and 6 above, all the δ quantities have been taken to be equal to zero.

The definitions of the quantities in tables 3 through 17 are given by the labels on top of each column, and should be obvious except perhaps for the last 5 columns. In these columns, b0col and d0col give the number of bunches which interact respectively at B0 and D0 per turn. The numbers nb0c, nb1c and nb2c are the numbers of bunches which experience respectively 0, 1 and 2 head-on collisions per turn when the beams are separated everywhere except at B0 and D0.

For each set of three tables, the first table gives all possible combinations of n_1 and n_2, corresponding to B ranging from 3 to 48, and subject to the choices for l_0, l_1, and l_2, defined above in sections 3 and 4. The second table looks at the restrictions imposed by proton injection kicker times: because we are only considering injection scheme A, only $n_2 = 1$ is considered. Options in which the kicker times do not satisfy the requirements shown at the top of the table are eliminated. The abort kicker rise time requirement shown at the top of the table is also imposed. The third table looks at the restrictions imposed by antiproton kicker times: again, the limits on the kicker times which have been used to select on the options displayed are shown at the top of the table. In this case, since we are only considering antiproton injection, we also require that $n_1 \leq 4$, for the reasons discussed above related to unstacking from the Accumulator.

TABLE 3

PARAMETERS FOR BUNCH SPACING OPTIONS;
bunch spacings in Rf buckets, kicker times in nsec
number of bunches per batch omitted to form an extension of the abort gap = 0

n1	n2	b	bg	10	1b	11	12	n	prise	pfall	pbrise	pbfall	flatt	abortg	abrise	b0col	d0col	nb0c	nb1c	nb2c
1	1	3	3	357	0	357	371	17	6975.	6975.	6975.	0.	0.	6975.	6975.	3	3	0	0	3
2	1	6	6	168	168	168	203	8	3816.	3816.	3816.	-3158.	3158.	3816.	3816.	6	6	0	0	6
1	2	6	6	168	0	168	203	8	3158.	3816.	3158.	658.	0.	3816.	3816.	6	6	0	0	6
3	1	9	9	105	210	105	161	5	3027.	3027.	3027.	-3948.	3948.	3027.	3027.	9	9	0	0	9
1	3	9	9	105	0	105	161	5	1974.	3027.	1974.	1053.	0.	3027.	3027.	9	9	0	0	9
4	1	12	12	84	252	84	119	4	2237.	2237.	2237.	-4738.	4738.	2237.	2237.	12	12	0	0	12
2	2	12	12	84	84	84	119	4	1579.	2237.	1579.	-921.	1579.	2237.	2237.	12	12	0	0	12
1	4	12	12	84	0	84	119	4	1579.	2237.	1579.	658.	0.	2237.	2237.	12	12	0	0	12
5	1	15	15	63	252	63	119	3	2237.	2237.	2237.	-4738.	4738.	2237.	2237.	15	15	0	0	15
1	5	15	15	63	0	63	119	3	1184.	2237.	1184.	1053.	0.	2237.	2237.	15	15	0	0	15
6	1	18	18	42	210	42	161	2	3027.	3027.	3027.	-3948.	3948.	3027.	3027.	18	18	0	0	18
3	2	18	18	42	84	42	161	2	790.	3027.	790.	658.	1579.	3027.	3027.	18	18	0	0	18
2	3	18	18	42	42	42	161	2	790.	3027.	790.	1448.	790.	3027.	3027.	18	18	0	0	18
1	6	18	18	42	0	42	161	2	790.	3027.	790.	2237.	0.	3027.	3027.	18	18	0	0	18
7	1	21	21	42	252	42	119	2	2237.	2237.	2237.	-4738.	4738.	2237.	2237.	21	21	0	0	21
1	7	21	21	42	0	42	119	2	790.	2237.	790.	1448.	0.	2237.	2237.	21	21	0	0	21
8	1	24	24	42	294	42	77	2	1448.	1448.	1448.	-5527.	5527.	1448.	1448.	24	24	0	0	24
4	2	24	24	42	126	42	77	2	790.	1448.	790.	-1711.	2369.	1448.	1448.	24	24	0	0	24
2	4	24	24	42	42	42	77	2	790.	1448.	790.	-132.	790.	1448.	1448.	24	24	0	0	24
1	8	24	24	42	0	42	77	2	790.	1448.	790.	658.	0.	1448.	1448.	24	24	0	0	24
9	1	27	27	21	168	21	203	1	3816.	3816.	3816.	-3158.	3158.	3816.	3816.	27	27	0	0	27
3	3	27	27	21	42	21	203	1	395.	3816.	395.	2632.	790.	3816.	3816.	27	27	0	0	27
1	9	27	27	21	0	21	203	1	395.	3816.	395.	3422.	0.	3816.	3816.	27	27	0	0	27
10	1	30	30	21	189	21	182	1	3422.	3422.	3422.	-3553.	3553.	3422.	3422.	30	30	0	0	30
5	2	30	30	21	84	21	182	1	395.	3422.	395.	1448.	1579.	3422.	3422.	30	30	0	0	30
2	5	30	30	21	21	21	182	1	395.	3422.	395.	2632.	395.	3422.	3422.	30	30	0	0	30
1	10	30	30	21	0	21	182	1	395.	3422.	395.	3027.	0.	3422.	3422.	30	30	0	0	30
11	1	33	33	21	210	21	161	1	3027.	3027.	3027.	-3948.	3948.	3027.	3027.	33	33	0	0	33
1	11	33	33	21	0	21	161	1	395.	3027.	395.	2632.	0.	3027.	3027.	33	33	0	0	33
12	1	36	36	21	231	21	140	1	2632.	2632.	2632.	-4343.	4343.	2632.	2632.	36	36	0	0	36
6	2	36	36	21	105	21	140	1	395.	2632.	395.	263.	1974.	2632.	2632.	36	36	0	0	36
4	3	36	36	21	63	21	140	1	395.	2632.	395.	1053.	1184.	2632.	2632.	36	36	0	0	36
3	4	36	36	21	42	21	140	1	395.	2632.	395.	1448.	790.	2632.	2632.	36	36	0	0	36
2	6	36	36	21	21	21	140	1	395.	2632.	395.	1842.	395.	2632.	2632.	36	36	0	0	36
1	12	36	36	21	0	21	140	1	395.	2632.	395.	2237.	0.	2632.	2632.	36	36	0	0	36
13	1	39	39	21	252	21	119	1	2237.	2237.	2237.	-4738.	4738.	2237.	2237.	39	39	0	0	39
1	13	39	39	21	0	21	119	1	395.	2237.	395.	1842.	0.	2237.	2237.	39	39	0	0	39
14	1	42	42	21	273	21	98	1	1842.	1842.	1842.	-5132.	5132.	1842.	1842.	42	42	0	0	42
7	2	42	42	21	126	21	98	1	395.	1842.	395.	-921.	2369.	1842.	1842.	42	42	0	0	42
2	7	42	42	21	21	21	98	1	395.	1842.	395.	1053.	395.	1842.	1842.	42	42	0	0	42
1	14	42	42	21	0	21	98	1	395.	1842.	395.	1448.	0.	1842.	1842.	42	42	0	0	42
15	1	45	45	21	294	21	77	1	1448.	1448.	1448.	-5527.	5527.	1448.	1448.	45	45	0	0	45
5	3	45	45	21	84	21	77	1	395.	1448.	395.	-526.	1579.	1448.	1448.	45	45	0	0	45
3	5	45	45	21	42	21	77	1	395.	1448.	395.	263.	790.	1448.	1448.	45	45	0	0	45
1	15	45	45	21	0	21	77	1	395.	1448.	395.	1053.	0.	1448.	1448.	45	45	0	0	45
16	1	48	48	21	315	21	56	1	1053.	1053.	1053.	-5922.	5922.	1053.	1053.	48	48	0	0	48
8	2	48	48	21	147	21	56	1	395.	1053.	395.	-2106.	2764.	1053.	1053.	48	48	0	0	48
4	4	48	48	21	63	21	56	1	395.	1053.	395.	-526.	1184.	1053.	1053.	48	48	0	0	48
2	8	48	48	21	21	21	56	1	395.	1053.	395.	263.	395.	1053.	1053.	48	48	0	0	48
1	16	48	48	21	0	21	56	1	395.	1053.	395.	658.	0.	1053.	1053.	48	48	0	0	48
17	1	51	51	21	336	21	35	1	658.	658.	658.	-6317.	6317.	658.	658.	51	51	0	1	47
1	17	51	51	21	0	21	35	1	395.	658.	395.	263.	0.	658.	658.	51	51	0	1	47

TABLE 4

PARAMETERS FOR BUNCH SPACING OPTIONS;
bunch spacings in Rf buckets, kicker times in nsec
number of bunches per batch omitted to form an extension of the abort gap = 0

Options restricted to those appropriate for proton injection:
n2 = 1 only, and the kicker times satisfy the following limits:
proton injection kicker rise time greater than 350.000 nsec
proton injection kicker fall time greater than 900.000 nsec
abort kicker rise time greater than 2200.000 nsec

n1	n2	b	bg	l0	lb	l1	l2	n	prise	pfall	pbrise	pbfall	flatt	abortg	abrise	b0col	d0col	nb0c	nb1c	nb2c
1	1	3	3	357	0	357	371	17	6975.	6975.	0.	0.	0.	6975.	6975.	3	3	0	0	3
2	1	6	6	168	168	168	203	8	3816.	3816.	0.	0.	3158.	3816.	3816.	6	6	0	0	6
3	1	9	9	105	210	105	161	5	3027.	3027.	0.	0.	3948.	3027.	3027.	9	9	0	0	9
4	1	12	12	84	252	84	119	4	2237.	2237.	0.	0.	4738.	2237.	2237.	12	12	0	0	12
5	1	15	15	63	252	63	119	3	2237.	2237.	0.	0.	4738.	2237.	2237.	15	15	0	0	15
6	1	18	18	42	210	42	161	2	3027.	3027.	0.	0.	3948.	3027.	3027.	18	18	0	0	18
7	1	21	21	42	252	42	119	2	2237.	2237.	0.	0.	4738.	2237.	2237.	21	21	0	0	21
9	1	27	27	21	168	21	203	1	3816.	3816.	0.	0.	3158.	3816.	3816.	27	27	0	0	27
10	1	30	30	21	189	21	182	1	3422.	3422.	0.	0.	3553.	3422.	3422.	30	30	0	0	30
11	1	33	33	21	210	21	161	1	3027.	3027.	0.	0.	3948.	3027.	3027.	33	33	0	0	33
12	1	36	36	21	231	21	140	1	2632.	2632.	0.	0.	4343.	2632.	2632.	36	36	0	0	36
13	1	39	39	21	252	21	119	1	2237.	2237.	0.	0.	4738.	2237.	2237.	39	39	0	0	39

TABLE 5

PARAMETERS FOR BUNCH SPACING OPTIONS;
bunch spacings in Rf buckets, kicker times in nsec
number of bunches per batch omitted to form an extension of the abort gap = 0

Options restricted to those appropriate for antiproton injection:
n1 less than or equal to 4, and the kicker times satisfy the following limits:
antiproton injection kicker rise time greater than 350.000 nsec
antiproton injection kicker fall time greater than 900.000 nsec
abort kicker rise time greater than 2200.000 nsec

n1	n2	b	bg	l0	lb	l1	l2	n	prise	pfall	pbrise	pbfall	flatt	abortg	abrise	b0col	d0col	nb0c	nb1c	nb2c
1	3	9	9	105	0	105	161	5	0.	0.	1974.	1053.	0.	3027.	3027.	9	9	0	0	9
1	5	15	15	63	0	63	119	3	0.	0.	1184.	1053.	0.	2237.	2237.	15	15	0	0	15
2	3	18	18	42	42	42	161	2	0.	0.	790.	1448.	790.	3027.	3027.	18	18	0	0	18
1	6	18	18	42	0	42	161	2	0.	0.	790.	2237.	0.	3027.	3027.	18	18	0	0	18
1	7	21	21	42	0	42	119	2	0.	0.	790.	1448.	0.	2237.	2237.	21	21	0	0	21
3	3	27	27	21	42	21	203	1	0.	0.	395.	2632.	790.	3816.	3816.	27	27	0	0	27
1	9	27	27	21	0	21	203	1	0.	0.	395.	3422.	0.	3816.	3816.	27	27	0	0	27
2	5	30	30	21	21	21	182	1	0.	0.	395.	2632.	395.	3422.	3422.	30	30	0	0	30
1	10	30	30	21	0	21	182	1	0.	0.	395.	3027.	0.	3422.	3422.	30	30	0	0	30
1	11	33	33	21	0	21	161	1	0.	0.	395.	2632.	0.	3027.	3027.	33	33	0	0	33
4	3	36	36	21	63	21	140	1	0.	0.	395.	1053.	1184.	2632.	2632.	36	36	0	0	36
3	4	36	36	21	42	21	140	1	0.	0.	395.	1448.	790.	2632.	2632.	36	36	0	0	36
2	6	36	36	21	21	21	140	1	0.	0.	395.	1842.	395.	2632.	2632.	36	36	0	0	36
1	12	36	36	21	0	21	140	1	0.	0.	395.	2237.	0.	2632.	2632.	36	36	0	0	36
1	13	39	39	21	0	21	119	1	0.	0.	395.	1842.	0.	2237.	2237.	39	39	0	0	39

TABLE 6

PARAMETERS FOR BUNCH SPACING OPTIONS:
bunch spacings in Rf buckets, kicker times in nsec
number of bunches per batch omitted to form an extension of the abort gap = 1

n1	n2	b	bg	l0	lb	l1	l2	n	prise	pfall	pbrise	pbfall	flatt	abortg	abrise	b0col	d0col	nb0c	nb1c	nb2c
1	1	3	1	357	0	357	371	17	6975.	20398.	6975.	13423.	0.	20398.	20398.	0	1	0	1	0
2	1	6	4	168	168	168	203	8	3816.	10133.	3816.	3158.	3158.	10133.	10133.	2	4	0	2	2
1	2	6	4	168	0	168	203	8	3158.	10133.	3158.	6975.	0.	10133.	10133.	2	4	0	2	2
3	1	9	7	105	210	105	161	5	3027.	6975.	3027.	0.	3948.	6975.	6975.	5	7	0	2	5
1	3	9	7	105	0	105	161	5	1974.	6975.	1974.	5001.	0.	6975.	6975.	5	7	0	2	5
4	1	12	10	84	252	84	119	4	2237.	5396.	2237.	-1579.	4738.	5396.	5396.	8	10	0	2	8
2	2	12	10	84	84	84	119	4	1579.	5396.	1579.	2237.	1579.	5396.	5396.	8	10	0	2	8
1	4	12	10	84	0	84	119	4	1579.	5396.	1579.	3816.	0.	5396.	5396.	8	10	0	2	8
5	1	15	13	63	252	63	119	3	2237.	4606.	2237.	-2369.	4738.	4606.	4606.	11	13	0	2	11
1	5	15	13	63	0	63	119	3	1184.	4606.	1184.	3422.	0.	4606.	4606.	11	13	0	2	11
6	1	18	16	42	210	42	161	2	3027.	4606.	3027.	-2369.	3948.	4606.	4606.	14	16	0	2	14
3	2	18	16	42	84	42	161	2	790.	4606.	790.	2237.	1579.	4606.	4606.	14	16	0	2	14
2	3	18	16	42	42	42	161	2	790.	4606.	790.	3027.	790.	4606.	4606.	14	16	0	2	14
1	6	18	16	42	0	42	161	2	790.	4606.	790.	3816.	0.	4606.	4606.	14	16	0	2	14
7	1	21	19	42	252	42	119	2	2237.	3816.	2237.	-3158.	4738.	3816.	3816.	17	19	0	2	17
1	7	21	19	42	0	42	119	2	790.	3816.	790.	3027.	0.	3816.	3816.	17	19	0	2	17
8	1	24	22	42	294	42	77	2	1448.	3027.	1448.	-3948.	5527.	3027.	3027.	20	22	0	2	20
4	2	24	22	42	126	42	77	2	790.	3027.	790.	-132.	2369.	3027.	3027.	20	22	0	2	20
2	4	24	22	42	42	42	77	2	790.	3027.	790.	1448.	790.	3027.	3027.	20	22	0	2	20
1	8	24	22	42	0	42	77	2	790.	3027.	790.	2237.	0.	3027.	3027.	20	22	0	2	20
9	1	27	25	21	168	21	203	1	3816.	4606.	3816.	-2369.	3158.	4606.	4606.	23	25	0	2	23
3	3	27	25	21	42	21	203	1	395.	4606.	395.	3422.	790.	4606.	4606.	23	25	0	2	23
1	9	27	25	21	0	21	203	1	395.	4606.	395.	4211.	0.	4606.	4606.	23	25	0	2	23
10	1	30	28	21	189	21	182	1	3422.	4211.	3422.	-2764.	3553.	4211.	4211.	26	28	0	2	26
5	2	30	28	21	84	21	182	1	395.	4211.	395.	2237.	1579.	4211.	4211.	26	28	0	2	26
2	5	30	28	21	21	21	182	1	395.	4211.	395.	3422.	395.	4211.	4211.	26	28	0	2	26
1	10	30	28	21	0	21	182	1	395.	4211.	395.	3816.	0.	4211.	4211.	26	28	0	2	26
11	1	33	31	21	210	21	161	1	3027.	3816.	3027.	-3158.	3948.	3816.	3816.	29	31	0	2	29
1	11	33	31	21	0	21	161	1	395.	3816.	395.	3422.	0.	3816.	3816.	29	31	0	2	29
12	1	36	34	21	231	21	140	1	2632.	3422.	2632.	-3553.	4343.	3422.	3422.	32	34	0	2	32
6	2	36	34	21	105	21	140	1	395.	3422.	395.	1053.	1974.	3422.	3422.	32	34	0	2	32
4	3	36	34	21	63	21	140	1	395.	3422.	395.	1842.	1184.	3422.	3422.	32	34	0	2	32
3	4	36	34	21	42	21	140	1	395.	3422.	395.	2237.	790.	3422.	3422.	32	34	0	2	32
2	6	36	34	21	21	21	140	1	395.	3422.	395.	2632.	395.	3422.	3422.	32	34	0	2	32
1	12	36	34	21	0	21	140	1	395.	3422.	395.	3027.	0.	3422.	3422.	32	34	0	2	32
13	1	39	37	21	252	21	119	1	2237.	3027.	2237.	-3948.	4738.	3027.	3027.	35	37	0	2	35
1	13	39	37	21	0	21	119	1	395.	3027.	395.	2632.	0.	3027.	3027.	35	37	0	2	35
14	1	42	40	21	273	21	98	1	1842.	2632.	1842.	-4343.	5132.	2632.	2632.	38	40	0	2	38
7	2	42	40	21	126	21	98	1	395.	2632.	395.	-132.	2369.	2632.	2632.	38	40	0	2	38
2	7	42	40	21	21	21	98	1	395.	2632.	395.	1842.	395.	2632.	2632.	38	40	0	2	38
1	14	42	40	21	0	21	98	1	395.	2632.	395.	2237.	0.	2632.	2632.	38	40	0	2	38
15	1	45	43	21	294	21	77	1	1448.	2237.	1448.	-4738.	5527.	2237.	2237.	41	43	0	2	41
5	3	45	43	21	84	21	77	1	395.	2237.	395.	263.	1579.	2237.	2237.	41	43	0	2	41
3	5	45	43	21	42	21	77	1	395.	2237.	395.	1053.	790.	2237.	2237.	41	43	0	2	41
1	15	45	43	21	0	21	77	1	395.	2237.	395.	1842.	0.	2237.	2237.	41	43	0	2	41
16	1	48	46	21	315	21	56	1	1053.	1842.	1053.	-5132.	5922.	1842.	1842.	44	46	0	2	44
8	2	48	46	21	147	21	56	1	395.	1842.	395.	-1316.	2764.	1842.	1842.	44	46	0	2	44
4	4	48	46	21	63	21	56	1	395.	1842.	395.	263.	1184.	1842.	1842.	44	46	0	2	44
2	8	48	46	21	21	21	56	1	395.	1842.	395.	1053.	395.	1842.	1842.	44	46	0	2	44
1	16	48	46	21	0	21	56	1	395.	1842.	395.	1448.	0.	1842.	1842.	44	46	0	2	44
17	1	51	49	21	336	21	35	1	658.	1448.	658.	-5527.	6317.	1448.	1448.	47	49	0	2	47
1	17	51	49	21	0	21	35	1	395.	1448.	395.	1053.	0.	1448.	1448.	47	49	0	2	47

TABLE 7

PARAMETERS FOR BUNCH SPACING OPTIONS;
bunch spacings in Rf buckets, kicker times in nsec
number of bunches per batch omitted to form an extension of the abort gap = 1

Options restricted to those appropriate for proton injection:
n2 = 1 only, and the kicker times satisfy the following limits:
proton injection kicker rise time greater than 350.000 nsec
proton injection kicker fall time greater than 900.000 nsec
abort kicker rise time greater than 2200.000 nsec

n1	n2	b	bg	10	1b	11	12	n	prise	pfall	pbrise	pbfall	flatt	abortg	abrise	b0col	d0col	nb0c	nb1c	nb2c
1	1	3	1	357	0	357	371	17	6975.	20398.	0.	0.	0.	20398.	20398.	0	1	0	1	0
2	1	6	4	168	168	168	203	8	3816.	10133.	0.	0.	3158.	10133.	10133.	2	4	0	2	2
3	1	9	7	105	210	105	161	5	3027.	6975.	0.	0.	3948.	6975.	6975.	5	7	0	2	5
4	1	12	10	84	252	84	119	4	2237.	5396.	0.	0.	4738.	5396.	5396.	8	10	0	2	8
5	1	15	13	63	252	63	119	3	2237.	4606.	0.	0.	4738.	4606.	4606.	11	13	0	2	11
6	1	18	16	42	210	42	161	2	3027.	4606.	0.	0.	3948.	4606.	4606.	14	16	0	2	14
7	1	21	19	42	252	42	119	2	2237.	3816.	0.	0.	4738.	3816.	3816.	17	19	0	2	17
8	1	24	22	42	294	42	77	2	1448.	3027.	0.	0.	5527.	3027.	3027.	20	22	0	2	20
9	1	27	25	21	168	21	203	1	3816.	4606.	0.	0.	3158.	4606.	4606.	23	25	0	2	23
10	1	30	28	21	189	21	182	1	3422.	4211.	0.	0.	3553.	4211.	4211.	26	28	0	2	26
11	1	33	31	21	210	21	161	1	3027.	3816.	0.	0.	3948.	3816.	3816.	29	31	0	2	29
12	1	36	34	21	231	21	140	1	2632.	3422.	0.	0.	4343.	3422.	3422.	32	34	0	2	32
13	1	39	37	21	252	21	119	1	2237.	3027.	0.	0.	4738.	3027.	3027.	35	37	0	2	35
14	1	42	40	21	273	21	98	1	1842.	2632.	0.	0.	5132.	2632.	2632.	38	40	0	2	38
15	1	45	43	21	294	21	77	1	1448.	2237.	0.	0.	5527.	2237.	2237.	41	43	0	2	41

TABLE 8

PARAMETERS FOR BUNCH SPACING OPTIONS;
bunch spacings in Rf buckets, kicker times in nsec
number of bunches per batch omitted to form an extension of the abort gap = 1

Options restricted to those appropriate for antiproton injection:
n1 less than or equal to 4, and the kicker times satisfy the following limits:
antiproton injection kicker rise time greater than 350.000 nsec
antiproton injection kicker fall time greater than 900.000 nsec
abort kicker rise time greater than 2200.000 nsec

n1	n2	b	bg	l0	lb	l1	l2	n	prise	pfall	pbrise	pbfall	flatt	abortg	abrise	b0col	d0col	nb0c	nb1c	nb2c
1	1	3	1	357	0	357	371	17	0.	0.	6975.	13423.	0.	20398.	20398.	0	1	0	1	0
2	1	6	4	168	168	168	203	8	0.	0.	3816.	3158.	3158.	10133.	10133.	2	4	0	2	2
1	2	6	4	168	0	168	203	8	0.	0.	3158.	6975.	0.	10133.	10133.	2	4	0	2	2
1	3	9	7	105	0	105	161	5	0.	0.	1974.	5001.	0.	6975.	6975.	5	7	0	2	5
2	2	12	10	84	84	84	119	4	0.	0.	1579.	2237.	1579.	5396.	5396.	8	10	0	2	8
1	4	12	10	84	0	84	119	4	0.	0.	1579.	3816.	0.	5396.	5396.	8	10	0	2	8
1	5	15	13	63	0	63	119	3	0.	0.	1184.	3422.	0.	4606.	4606.	11	13	0	2	11
3	2	18	16	42	84	42	161	2	0.	0.	790.	2237.	1579.	4606.	4606.	14	16	0	2	14
2	3	18	16	42	42	42	161	2	0.	0.	790.	3027.	790.	4606.	4606.	14	16	0	2	14
1	6	18	16	42	0	42	161	2	0.	0.	790.	3816.	0.	4606.	4606.	14	16	0	2	14
1	7	21	19	42	0	42	119	2	0.	0.	790.	3027.	0.	3816.	3816.	17	19	0	2	17
2	4	24	22	42	42	42	77	2	0.	0.	790.	1448.	790.	3027.	3027.	20	22	0	2	20
1	8	24	22	42	0	42	77	2	0.	0.	790.	2237.	0.	3027.	3027.	20	22	0	2	20
3	3	27	25	21	42	21	203	1	0.	0.	395.	3422.	790.	4606.	4606.	23	25	0	2	23
1	9	27	25	21	0	21	203	1	0.	0.	395.	4211.	0.	4606.	4606.	23	25	0	2	23
2	5	30	28	21	21	21	182	1	0.	0.	395.	3422.	395.	4211.	4211.	26	28	0	2	26
1	10	30	28	21	0	21	182	1	0.	0.	395.	3816.	0.	4211.	4211.	26	28	0	2	26
1	11	33	31	21	0	21	161	1	0.	0.	395.	3422.	0.	3816.	3816.	29	31	0	2	29
4	3	36	34	21	63	21	140	1	0.	0.	395.	1842.	1184.	3422.	3422.	32	34	0	2	32
3	4	36	34	21	42	21	140	1	0.	0.	395.	2237.	790.	3422.	3422.	32	34	0	2	32
2	6	36	34	21	21	21	140	1	0.	0.	395.	2632.	395.	3422.	3422.	32	34	0	2	32
1	12	36	34	21	0	21	140	1	0.	0.	395.	3027.	0.	3422.	3422.	32	34	0	2	32
1	13	39	37	21	0	21	119	1	0.	0.	395.	2632.	0.	3027.	3027.	35	37	0	2	35
2	7	42	40	21	21	21	98	1	0.	0.	395.	1842.	395.	2632.	2632.	38	40	0	2	38
1	14	42	40	21	0	21	98	1	0.	0.	395.	2237.	0.	2632.	2632.	38	40	0	2	38
3	5	45	43	21	42	21	77	1	0.	0.	395.	1053.	790.	2237.	2237.	41	43	0	2	41
1	15	45	43	21	0	21	77	1	0.	0.	395.	1842.	0.	2237.	2237.	41	43	0	2	41

TABLE 9

PARAMETERS FOR BUNCH SPACING OPTIONS;
bunch spacings in Rf buckets, kicker times in nsec
number of bunches per batch omitted to form an extension of the abort gap = 2

n1	n2	b	bg	l0	lb	l1	l2	n	prise	pfall	pbrise	pbfall	flatt	abortg	abrise	b0col	d0col	nb0c	nb1c	nb2c
2	1	6	2	168	168	168	203	8	3816.	16450.	3816.	9475.	3158.	16450.	16450.	0	2	0	2	0
3	1	9	5	105	210	105	161	5	3027.	10923.	3027.	3948.	3948.	10923.	10923.	2	5	0	3	2
4	1	12	8	84	252	84	119	4	2237.	8554.	2237.	1579.	4738.	8554.	8554.	4	8	0	4	4
2	2	12	8	84	84	84	119	4	1579.	8554.	1579.	5396.	1579.	8554.	8554.	4	8	0	4	4
5	1	15	11	63	252	63	119	3	2237.	6975.	2237.	0.	4738.	6975.	6975.	7	11	0	4	7
6	1	18	14	42	210	42	161	2	3027.	6185.	3027.	-790.	3948.	6185.	6185.	10	14	0	4	10
3	2	18	14	42	84	42	161	2	790.	6185.	790.	3816.	1579.	6185.	6185.	10	14	0	4	10
2	3	18	14	42	42	42	161	2	790.	6185.	790.	4606.	790.	6185.	6185.	10	14	0	4	10
7	1	21	17	42	252	42	119	2	2237.	5396.	2237.	-1579.	4738.	5396.	5396.	13	17	0	4	13
8	1	24	20	42	294	42	77	2	1448.	4606.	1448.	-2369.	5527.	4606.	4606.	16	20	0	4	16
4	2	24	20	42	126	42	77	2	790.	4606.	790.	1448.	2369.	4606.	4606.	16	20	0	4	16
2	4	24	20	42	42	42	77	2	790.	4606.	790.	3027.	790.	4606.	4606.	16	20	0	4	16
9	1	27	23	21	168	21	203	1	3816.	5396.	3816.	-1579.	3158.	5396.	5396.	19	23	0	4	19
3	3	27	23	21	42	21	203	1	395.	5396.	395.	4211.	790.	5396.	5396.	19	23	0	4	19
10	1	30	26	21	189	21	182	1	3422.	5001.	3422.	-1974.	3553.	5001.	5001.	22	26	0	4	22
5	2	30	26	21	84	21	182	1	395.	5001.	395.	3027.	1579.	5001.	5001.	22	26	0	4	22
2	5	30	26	21	21	21	182	1	395.	5001.	395.	4211.	395.	5001.	5001.	22	26	0	4	22
11	1	33	29	21	210	21	161	1	3027.	4606.	3027.	-2369.	3948.	4606.	4606.	25	29	0	4	25
12	1	36	32	21	231	21	140	1	2632.	4211.	2632.	-2764.	4343.	4211.	4211.	28	32	0	4	28
6	2	36	32	21	105	21	140	1	395.	4211.	395.	1842.	1974.	4211.	4211.	28	32	0	4	28
4	3	36	32	21	63	21	140	1	395.	4211.	395.	2632.	1184.	4211.	4211.	28	32	0	4	28
3	4	36	32	21	42	21	140	1	395.	4211.	395.	3027.	790.	4211.	4211.	28	32	0	4	28
2	6	36	32	21	21	21	140	1	395.	4211.	395.	3422.	395.	4211.	4211.	28	32	0	4	28
13	1	39	35	21	252	21	119	1	2237.	3816.	2237.	-3158.	4738.	3816.	3816.	31	35	0	4	31
14	1	42	38	21	273	21	98	1	1842.	3422.	1842.	-3553.	5132.	3422.	3422.	34	38	0	4	34
7	2	42	38	21	126	21	98	1	395.	3422.	395.	658.	2369.	3422.	3422.	34	38	0	4	34
2	7	42	38	21	21	21	98	1	395.	3422.	395.	2632.	395.	3422.	3422.	34	38	0	4	34
15	1	45	41	21	294	21	77	1	1448.	3027.	1448.	-3948.	5527.	3027.	3027.	37	41	0	4	37
5	3	45	41	21	84	21	77	1	395.	3027.	395.	1053.	1579.	3027.	3027.	37	41	0	4	37
3	5	45	41	21	42	21	77	1	395.	3027.	395.	1842.	790.	3027.	3027.	37	41	0	4	37
16	1	48	44	21	315	21	56	1	1053.	2632.	1053.	-4343.	5922.	2632.	2632.	40	44	0	4	40
8	2	48	44	21	147	21	56	1	395.	2632.	395.	-526.	2764.	2632.	2632.	40	44	0	4	40
4	4	48	44	21	63	21	56	1	395.	2632.	395.	1053.	1184.	2632.	2632.	40	44	0	4	40
2	8	48	44	21	21	21	56	1	395.	2632.	395.	1842.	395.	2632.	2632.	40	44	0	4	40
17	1	51	47	21	336	21	35	1	658.	2237.	658.	-4738.	6317.	2237.	2237.	43	47	0	4	43

TABLE 10

PARAMETERS FOR BUNCH SPACING OPTIONS;
bunch spacings in Rf buckets, kicker times in nsec
number of bunches per batch omitted to form an extension of the abort gap = 2

Options restricted to those appropriate for proton injection:
n2 = 1 only, and the kicker times satisfy the following limits:
proton injection kicker rise time greater than 350.000 nsec
proton injection kicker fall time greater than 900.000 nsec
abort kicker rise time greater than 2200.000 nsec

n1	n2	b	bg	l0	lb	l1	l2	n	prise	pfall	pbrise	pbfall	flatt	abortg	abrise	b0col	d0col	nb0c	nb1c	nb2c
2	1	6	2	168	168	168	203	8	3816.	16450.	0.	0.	3158.	16450.	16450.	0	2	0	2	0
3	1	9	5	105	210	105	161	5	3027.	10923.	0.	0.	3948.	10923.	10923.	2	5	0	3	2
4	1	12	8	84	252	84	119	4	2237.	8554.	0.	0.	4738.	8554.	8554.	4	8	0	4	4
5	1	15	11	63	252	63	119	3	2237.	6975.	0.	0.	4738.	6975.	6975.	7	11	0	4	7
6	1	18	14	42	210	42	161	2	3027.	6185.	0.	0.	3948.	6185.	6185.	10	14	0	4	10
7	1	21	17	42	252	42	119	2	2237.	5396.	0.	0.	4738.	5396.	5396.	13	17	0	4	13
8	1	24	20	42	294	42	77	2	1448.	4606.	0.	0.	5527.	4606.	4606.	16	20	0	4	16
9	1	27	23	21	168	21	203	1	3816.	5396.	0.	0.	3158.	5396.	5396.	19	23	0	4	19
10	1	30	26	21	189	21	182	1	3422.	5001.	0.	0.	3553.	5001.	5001.	22	26	0	4	22
11	1	33	29	21	210	21	161	1	3027.	4606.	0.	0.	3948.	4606.	4606.	25	29	0	4	25
12	1	36	32	21	231	21	140	1	2632.	4211.	0.	0.	4343.	4211.	4211.	28	32	0	4	28
13	1	39	35	21	252	21	119	1	2237.	3816.	0.	0.	4738.	3816.	3816.	31	35	0	4	31
14	1	42	38	21	273	21	98	1	1842.	3422.	0.	0.	5132.	3422.	3422.	34	38	0	4	34
15	1	45	41	21	294	21	77	1	1448.	3027.	0.	0.	5527.	3027.	3027.	37	41	0	4	37
16	1	48	44	21	315	21	56	1	1053.	2632.	0.	0.	5922.	2632.	2632.	40	44	0	4	40
17	1	51	47	21	336	21	35	1	658.	2237.	0.	0.	6317.	2237.	2237.	43	47	0	4	43

TABLE 11

PARAMETERS FOR BUNCH SPACING OPTIONS;
bunch spacings in Rf buckets, kicker times in nsec
number of bunches per batch omitted to form an extension of the abort gap = 2

Options restricted to those appropriate for antiproton injection:
n1 less than or equal to 4, and the kicker times satisfy the following limits:
antiproton injection kicker rise time greater than 350.000 nsec
antiproton injection kicker fall time greater than 900.000 nsec
abort kicker rise time greater than 2200.000 nsec

n1	n2	b	bg	l0	lb	l1	l2	n	prise	pfall	pbrise	pbfall	flatt	abortg	abrise	b0col	d0col	nb0c	nb1c	nb2c
2	1	6	2	168	168	168	203	8	0.	0.	3816.	9475.	3158.	16450.	16450.	0	2	0	2	0
3	1	9	5	105	210	105	161	5	0.	0.	3027.	3948.	3948.	10923.	10923.	2	5	0	3	2
4	1	12	8	84	252	84	119	4	0.	0.	2237.	1579.	4738.	8554.	8554.	4	8	0	4	4
2	2	12	8	84	84	84	119	4	0.	0.	1579.	5396.	1579.	8554.	8554.	4	8	0	4	4
3	2	18	14	42	84	42	161	2	0.	0.	790.	3816.	1579.	6185.	6185.	10	14	0	4	10
2	3	18	14	42	42	42	161	2	0.	0.	790.	4606.	790.	6185.	6185.	10	14	0	4	10
4	2	24	20	42	126	42	77	2	0.	0.	790.	1448.	2369.	4606.	4606.	16	20	0	4	16
2	4	24	20	42	42	42	77	2	0.	0.	790.	3027.	790.	4606.	4606.	16	20	0	4	16
3	3	27	23	21	42	21	203	1	0.	0.	395.	4211.	790.	5396.	5396.	19	23	0	4	19
2	5	30	26	21	21	21	182	1	0.	0.	395.	4211.	395.	5001.	5001.	22	26	0	4	22
4	3	36	32	21	63	21	140	1	0.	0.	395.	2632.	1184.	4211.	4211.	28	32	0	4	28
3	4	36	32	21	42	21	140	1	0.	0.	395.	3027.	790.	4211.	4211.	28	32	0	4	28
2	6	36	32	21	21	21	140	1	0.	0.	395.	3422.	395.	4211.	4211.	28	32	0	4	28
2	7	42	38	21	21	21	98	1	0.	0.	395.	2632.	395.	3422.	3422.	34	38	0	4	34
3	5	45	41	21	42	21	77	1	0.	0.	395.	1842.	790.	3027.	3027.	37	41	0	4	37
4	4	48	44	21	63	21	56	1	0.	0.	395.	1053.	1184.	2632.	2632.	40	44	0	4	40
2	8	48	44	21	21	21	56	1	0.	0.	395.	1842.	395.	2632.	2632.	40	44	0	4	40

TABLE 12

PARAMETERS FOR BUNCH SPACING OPTIONS;
bunch spacings in Rf buckets, kicker times in nsec
number of bunches per batch omitted to form an extension of the abort gap = 3

n1	n2	b	bg	10	lb	11	12	n	prise	pfall	pbrise	pbfall	flatt	abortg	abrise	b0col	d0col	nb0c	nb1c	nb2c
3	1	9	3	105	210	105	161	5	3027.	14871.	3027.	7896.	3948.	14871.	14871.	0	3	0	3	0
4	1	12	6	84	252	84	119	4	2237.	11712.	2237.	4738.	4738.	11712.	11712.	2	6	0	4	2
5	1	15	9	63	252	63	119	3	2237.	9344.	2237.	2369.	4738.	9344.	9344.	4	9	0	5	4
6	1	18	12	42	210	42	161	2	3027.	7764.	3027.	790.	3948.	7764.	7764.	6	12	0	6	6
3	2	18	12	42	84	42	161	2	790.	7764.	790.	5396.	1579.	7764.	7764.	6	12	0	6	6
7	1	21	15	42	252	42	119	2	2237.	6975.	2237.	0.	4738.	6975.	6975.	9	15	0	6	9
8	1	24	18	42	294	42	77	2	1448.	6185.	1448.	-790.	5527.	6185.	6185.	12	18	0	6	12
4	2	24	18	42	126	42	77	2	790.	6185.	790.	3027.	2369.	6185.	6185.	12	18	0	6	12
9	1	27	21	21	168	21	203	1	3816.	6185.	3816.	-790.	3158.	6185.	6185.	15	21	0	6	15
3	3	27	21	21	42	21	203	1	395.	6185.	395.	5001.	790.	6185.	6185.	15	21	0	6	15
10	1	30	24	21	189	21	182	1	3422.	5790.	3422.	-1184.	3553.	5790.	5790.	18	24	0	6	18
5	2	30	24	21	84	21	182	1	395.	5790.	395.	3816.	1579.	5790.	5790.	18	24	0	6	18
11	1	33	27	21	210	21	161	1	3027.	5396.	3027.	-1579.	3948.	5396.	5396.	21	27	0	6	21
12	1	36	30	21	231	21	140	1	2632.	5001.	2632.	-1974.	4343.	5001.	5001.	24	30	0	6	24
6	2	36	30	21	105	21	140	1	395.	5001.	395.	2632.	1974.	5001.	5001.	24	30	0	6	24
4	3	36	30	21	63	21	140	1	395.	5001.	395.	3422.	1184.	5001.	5001.	24	30	0	6	24
3	4	36	30	21	42	21	140	1	395.	5001.	395.	3816.	790.	5001.	5001.	24	30	0	6	24
13	1	39	33	21	252	21	119	1	2237.	4606.	2237.	-2369.	4738.	4606.	4606.	27	33	0	6	27
14	1	42	36	21	273	21	98	1	1842.	4211.	1842.	-2764.	5132.	4211.	4211.	30	36	0	6	30
7	2	42	36	21	126	21	98	1	395.	4211.	395.	1448.	2369.	4211.	4211.	30	36	0	6	30
15	1	45	39	21	294	21	77	1	1448.	3816.	1448.	-3158.	5527.	3816.	3816.	33	39	0	6	33
5	3	45	39	21	84	21	77	1	395.	3816.	395.	1842.	1579.	3816.	3816.	33	39	0	6	33
3	5	45	39	21	42	21	77	1	395.	3816.	395.	2632.	790.	3816.	3816.	33	39	0	6	33
16	1	48	42	21	315	21	56	1	1053.	3422.	1053.	-3553.	5922.	3422.	3422.	36	42	0	6	36
8	2	48	42	21	147	21	56	1	395.	3422.	395.	263.	2764.	3422.	3422.	36	42	0	6	36
4	4	48	42	21	63	21	56	1	395.	3422.	395.	1842.	1184.	3422.	3422.	36	42	0	6	36
17	1	51	45	21	336	21	35	1	658.	3027.	658.	-3948.	6317.	3027.	3027.	39	45	0	6	39

TABLE 13

PARAMETERS FOR BUNCH SPACING OPTIONS;
bunch spacings in Rf buckets, kicker times in nsec
number of bunches per batch omitted to form an extension of the abort gap = 3

Options restricted to those appropriate for proton injection:
n2 = 1 only, and the kicker times satisfy the following limits:
proton injection kicker rise time greater than 350.000 nsec
proton injection kicker fall time greater than 900.000 nsec
abort kicker rise time greater than 2200.000 nsec

n1	n2	b	bg	l0	lb	l1	l2	n	prise	pfall	pbrise	pbfall	flatt	abortg	abrise	b0col	d0col	nb0c	nb1c	nb2c
3	1	9	3	105	210	105	161	5	3027.	14871.	0.	0.	3948.	14871.	14871.	0	3	0	3	0
4	1	12	6	84	252	84	119	4	2237.	11712.	0.	0.	4738.	11712.	11712.	2	6	0	4	2
5	1	15	9	63	252	63	119	3	2237.	9344.	0.	0.	4738.	9344.	9344.	4	9	0	5	4
6	1	18	12	42	210	42	161	2	3027.	7764.	0.	0.	3948.	7764.	7764.	6	12	0	6	6
7	1	21	15	42	252	42	119	2	2237.	6975.	0.	0.	4738.	6975.	6975.	9	15	0	6	9
8	1	24	18	42	294	42	77	2	1448.	6185.	0.	0.	5527.	6185.	6185.	12	18	0	6	12
9	1	27	21	21	168	21	203	1	3816.	6185.	0.	0.	3158.	6185.	6185.	15	21	0	6	15
10	1	30	24	21	189	21	182	1	3422.	5790.	0.	0.	3553.	5790.	5790.	18	24	0	6	18
11	1	33	27	21	210	21	161	1	3027.	5396.	0.	0.	3948.	5396.	5396.	21	27	0	6	21
12	1	36	30	21	231	21	140	1	2632.	5001.	0.	0.	4343.	5001.	5001.	24	30	0	6	24
13	1	39	33	21	252	21	119	1	2237.	4606.	0.	0.	4738.	4606.	4606.	27	33	0	6	27
14	1	42	36	21	273	21	98	1	1842.	4211.	0.	0.	5132.	4211.	4211.	30	36	0	6	30
15	1	45	39	21	294	21	77	1	1448.	3816.	0.	0.	5527.	3816.	3816.	33	39	0	6	33
16	1	48	42	21	315	21	56	1	1053.	3422.	0.	0.	5922.	3422.	3422.	36	42	0	6	36
17	1	51	45	21	336	21	35	1	658.	3027.	0.	0.	6317.	3027.	3027.	39	45	0	6	39

TABLE 14

PARAMETERS FOR BUNCH SPACING OPTIONS;
bunch spacings in Rf buckets, kicker times in nsec
number of bunches per batch omitted to form an extension of the abort gap = 3

Options restricted to those appropriate for antiproton injection:
n1 less than or equal to 4, and the kicker times satisfy the following limits:
antiproton injection kicker rise time greater than 350.000 nsec
antiproton injection kicker fall time greater than 900.000 nsec
abort kicker rise time greater than 2200.000 nsec

n1	n2	b	bg	l0	lb	l1	l2	n	prise	pfall	pbrise	pbfall	flatt	abortg	abrise	b0col	d0col	nb0c	nb1c	nb2c
3	1	9	3	105	210	105	161	5	0.	0.	3027.	7896.	3948.	14871.	14871.	0	3	0	3	0
4	1	12	6	84	252	84	119	4	0.	0.	2237.	4738.	4738.	11712.	11712.	2	6	0	4	2
3	2	18	12	42	84	42	161	2	0.	0.	790.	5396.	1579.	7764.	7764.	6	12	0	6	6
4	2	24	18	42	126	42	77	2	0.	0.	790.	3027.	2369.	6185.	6185.	12	18	0	6	12
3	3	27	21	21	42	21	203	1	0.	0.	395.	5001.	790.	6185.	6185.	15	21	0	6	15
4	3	36	30	21	63	21	140	1	0.	0.	395.	3422.	1184.	5001.	5001.	24	30	0	6	24
3	4	36	30	21	42	21	140	1	0.	0.	395.	3816.	790.	5001.	5001.	24	30	0	6	24
3	5	45	39	21	42	21	77	1	0.	0.	395.	2632.	790.	3816.	3816.	33	39	0	6	33
4	4	48	42	21	63	21	56	1	0.	0.	395.	1842.	1184.	3422.	3422.	36	42	0	6	36

TABLE 15

PARAMETERS FOR BUNCH SPACING OPTIONS;
bunch spacings in Rf buckets, kicker times in nsec
number of bunches per batch omitted to form an extension of the abort gap = 4

n1	n2	b	bg	l0	lb	l1	l2	n	prise	pfall	pbrise	pbfall	flatt	abortg	abrise	b0col	d0col	nb0c	nb1c	nb2c
4	1	12	4	84	252	84	119	4	2237.	14871.	2237.	7896.	4738.	14871.	14871.	0	4	0	4	0
5	1	15	7	63	252	63	119	3	2237.	11712.	2237.	4738.	4738.	11712.	11712.	2	7	0	5	2
6	1	18	10	42	210	42	161	2	3027.	9344.	3027.	2369.	3948.	9344.	9344.	4	10	0	6	4
7	1	21	13	42	252	42	119	2	2237.	8554.	2237.	1579.	4738.	8554.	8554.	6	13	0	7	6
8	1	24	16	42	294	42	77	2	1448.	7764.	1448.	790.	5527.	7764.	7764.	8	16	0	8	8
4	2	24	16	42	126	42	77	2	790.	7764.	790.	4606.	2369.	7764.	7764.	8	16	0	8	8
9	1	27	19	21	168	21	203	1	3816.	6975.	3816.	0.	3158.	6975.	6975.	11	19	0	8	11
10	1	30	22	21	189	21	182	1	3422.	6580.	3422.	-395.	3553.	6580.	6580.	14	22	0	8	14
5	2	30	22	21	84	21	182	1	395.	6580.	395.	4606.	1579.	6580.	6580.	14	22	0	8	14
11	1	33	25	21	210	21	161	1	3027.	6185.	3027.	-790.	3948.	6185.	6185.	17	25	0	8	17
12	1	36	28	21	231	21	140	1	2632.	5790.	2632.	-1184.	4343.	5790.	5790.	20	28	0	8	20
6	2	36	28	21	105	21	140	1	395.	5790.	395.	3422.	1974.	5790.	5790.	20	28	0	8	20
4	3	36	28	21	63	21	140	1	395.	5790.	395.	4211.	1184.	5790.	5790.	20	28	0	8	20
13	1	39	31	21	252	21	119	1	2237.	5396.	2237.	-1579.	4738.	5396.	5396.	23	31	0	8	23
14	1	42	34	21	273	21	98	1	1842.	5001.	1842.	-1974.	5132.	5001.	5001.	26	34	0	8	26
7	2	42	34	21	126	21	98	1	395.	5001.	395.	2237.	2369.	5001.	5001.	26	34	0	8	26
15	1	45	37	21	294	21	77	1	1448.	4606.	1448.	-2369.	5527.	4606.	4606.	29	37	0	8	29
5	3	45	37	21	84	21	77	1	395.	4606.	395.	2632.	1579.	4606.	4606.	29	37	0	8	29
16	1	48	40	21	315	21	56	1	1053.	4211.	1053.	-2764.	5922.	4211.	4211.	32	40	0	8	32
8	2	48	40	21	147	21	56	1	395.	4211.	395.	1053.	2764.	4211.	4211.	32	40	0	8	32
4	4	48	40	21	63	21	56	1	395.	4211.	395.	2632.	1184.	4211.	4211.	32	40	0	8	32
17	1	51	43	21	336	21	35	1	658.	3816.	658.	-3158.	6317.	3816.	3816.	35	43	0	8	35

TABLE 16

PARAMETERS FOR BUNCH SPACING OPTIONS;
bunch spacings in Rf buckets, kicker times in nsec
number of bunches per batch omitted to form an extension of the abort gap = 4

Options restricted to those appropriate for proton injection:
n2 = 1 only, and the kicker times satisfy the following limits:
proton injection kicker rise time greater than 350.000 nsec
proton injection kicker fall time greater than 900.000 nsec
abort kicker rise time greater than 2200.000 nsec

n1	n2	b	bg	l0	lb	l1	l2	n	prise	pfall	pbrise	pbfall	flatt	abortg	abrise	b0col	d0col	nb0c	nb1c	nb2c
4	1	12	4	84	252	84	119	4	2237.	14871.	0.	0.	4738.	14871.	14871.	0	4	0	4	0
5	1	15	7	63	252	63	119	3	2237.	11712.	0.	0.	4738.	11712.	11712.	2	7	0	5	2
6	1	18	10	42	210	42	161	2	3027.	9344.	0.	0.	3948.	9344.	9344.	4	10	0	6	4
7	1	21	13	42	252	42	119	2	2237.	8554.	0.	0.	4738.	8554.	8554.	6	13	0	7	6
8	1	24	16	42	294	42	77	2	1448.	7764.	0.	0.	5527.	7764.	7764.	8	16	0	8	8
9	1	27	19	21	168	21	203	1	3816.	6975.	0.	0.	3158.	6975.	6975.	11	19	0	8	11
10	1	30	22	21	189	21	182	1	3422.	6580.	0.	0.	3553.	6580.	6580.	14	22	0	8	14
11	1	33	25	21	210	21	161	1	3027.	6185.	0.	0.	3948.	6185.	6185.	17	25	0	8	17
12	1	36	28	21	231	21	140	1	2632.	5790.	0.	0.	4343.	5790.	5790.	20	28	0	8	20
13	1	39	31	21	252	21	119	1	2237.	5396.	0.	0.	4738.	5396.	5396.	23	31	0	8	23
14	1	42	34	21	273	21	98	1	1842.	5001.	0.	0.	5132.	5001.	5001.	26	34	0	8	26
15	1	45	37	21	294	21	77	1	1448.	4606.	0.	0.	5527.	4606.	4606.	29	37	0	8	29
16	1	48	40	21	315	21	56	1	1053.	4211.	0.	0.	5922.	4211.	4211.	32	40	0	8	32
17	1	51	43	21	336	21	35	1	658.	3816.	0.	0.	6317.	3816.	3816.	35	43	0	8	35

TABLE 17

PARAMETERS FOR BUNCH SPACING OPTIONS;
bunch spacings in Rf buckets, kicker times in nsec
number of bunches per batch omitted to form an extension of the abort gap = 4

Options restricted to those appropriate for antiproton injection:
n1 less than or equal to 4, and the kicker times satisfy the following limits:
antiproton injection kicker rise time greater than 350.000 nsec
antiproton injection kicker fall time greater than 900.000 nsec
abort kicker rise time greater than 2200.000 nsec

n1	n2	b	bg	10	1b	11	12	n	prise	pfall	pbrise	pbfall	flatt	abortg	abrise	b0col	d0col	nb0c	nb1c	nb2c
4	1	12	4	84	252	84	119	4	0.	0.	2237.	7896.	4738.	14871.	14871.	0	4	0	4	0
4	2	24	16	42	126	42	77	2	0.	0.	790.	4606.	2369.	7764.	7764.	8	16	0	8	8
4	3	36	28	21	63	21	140	1	0.	0.	395.	4211.	1184.	5790.	5790.	20	28	0	8	20
4	4	48	40	21	63	21	56	1	0.	0.	395.	2632.	1184.	4211.	4211.	32	40	0	8	32

8. Conclusions

In table 18, the information in the detailed tables 3-17 has been reduced and summarized to give the basic parameters of the best option (i.e., largest number of bunches) for each value of n_g. This has been done for both the 21 and 42 bucket spacings. Options requiring very large (>20) numbers of antiproton injection cycles have been excluded as impractical.

The cases of most interest are the symmetric case ($n_g = 0$), and for $n_g > 0$, the case which maximizes the number of bunches. These cases have been underlined in Table 18. Examination of this table shows that for the 21 bucket spacing, the symmetric ($n_g = 0$) case gives 36 bunches; as n_g is increased, the number of bunches peaks at 44, with $n_g = 2$. For this case, there is a penalty of a 9% luminosity reduction at B0 and an equal fraction of the bunches having only 1 head-on interaction per turn. The case of $n_g = 1$ gives almost as many bunches with less of a luminosity reduction, but requires 15 antiproton injection cycles with 3 antiproton bunches per batch; this would require a suppressed-bucket h=4 system in the Accumulator for antiproton unstacking, which is an additional complication. For 42 bucket spacing, the symmetric case has 18 bunches; the maximum number of bunches, 22, is provided by the $n_g = 1$ case, again with a 9% luminosity penalty.

The injection and abort kickers will be designed to accommodate all of the possibilities associated with the cases underlined in table 18. A summary of the kicker timing requirements is then:

Abort kicker rise time < 2632 nsec.
Proton injection kicker rise time < 1053 nsec;
flat top(variable): 3948-5922 nsec
fall time < 2632 nsec.
Antiproton injection kicker rise time < 395 nsec;
flat top (variable):790-1184 nsec;
fall time < 1053 nsec.

Table 18:

A summary from tables 3-17of the basic parameters of the best option for each value of ng

For both 21 and 42 bucker minimum spacing

Minimum bunch spacing 21 RF buckets = 395 nsec.

n_g	$B = 3n_1$ n_2	Actual number of bunches = B- $2n_g$	n_1 (protons) = number of protons/ batch	$3n_2$ (protons) = number of proton injection cycles	Proton injection kicker rise time (nsec)	Proton injection kicker flat top (nsec)	Proton injection kicker fall time (nsec)	n_1 (Pbars) = number of Pbars/ batch	$3n_2$ (Pbars) = number of Pbar injection cycles	Pbar injection kicker rise time (nsec)	Pbar injection kicker flat top (nsec)	Pbar injection kicker fall time (nsec)	Abort gap= Abort kicker rise time (nsec)	Fractional luminosity reduction at B0= fraction of the bunches which have only 1 head-on interaction per turn (%)
0	36	36	12	3	2632	4343	2632	4	9	395	1184	1053	2632	0
1	45	43	15	3	1448	5527	2237	3	15	395	790	1053	2237	4.6
2	48	44	16	3	1053	5922	2632	4	12	395	1184	1053	2632	9.1
3	48	42	16	3	1053	5922	3422	4	12	395	1184	1842	3816	14.2
4	48	40	16	3	1053	5922	4211	4	12	395	1184	2632	4211	20

Minimum bunch spacing 42 RF buckets = 790 nsec.

n_g	$B = 3n_1$ n_2	Actual number of bunches = B- $2n_g$	n_1 (protons) = number of protons/ batch	$3n_2$ (protons) = number of proton injection cycles	Proton injection kicker rise time (nsec)	Proton injection kicker flat top (nsec)	Proton injection kicker fall time (nsec)	n_1 (Pbars) = number of Pbars/ batch	$3n_2$ (Pbars) = number of Pbar injection cycles	Pbar injection kicker rise time (nsec)	Pbar injection kicker flat top (nsec)	Pbar injection kicker fall time (nsec)	Abort gap= Abort kicker rise time (nsec)	Fractional luminosity reduction at B0= fraction of the bunches which have only 1 head-on interaction per turn (%)
0	18	18	6	3	3027	3948	3027	2	9	790	790	1448	3027	0
1	24	22	8	3	1448	5527	3027	2	12	790	790	1448	3027	9.1
2	24	20	8	3	1448	5527	4606	4	6	790	2369	1448	4606	20
3	24	18	8	3	1448	5527	6185	4	6	790	3027	2369	6185	33.3
4	24	16	8	3	1448	5527	7764	4	6	790	4606	2369	7764	50