Fermi National Accelerator Laboratory

TM-1611

Design Note of a 10,000 Amp 2 MJoules Dump Resistor for the Magnet Test Facility

A. T. Visser
Fermi National Accelerator Laboratory
P.O. Box 500
Batavia, Illinois 60510

March 1990

Operated by Universities Research Association Inc. under contract with the United States Department of Energy

TM-1611
Cat. #2080.000

A.T. Visser
March 1990

DESIGN NOTE OF A 10,000 AMP 2 MJOULES

DUMP RESISTOR FOR THE MAGNET TEST FACILITY

TABLE OF CONTENTS

1.	Summary	1
2.	As Built Dump Resistor Parameters	1
3.	MTF Dump Resistor Design Requirements	2
4.	General Design Approach	2
5.	Dump Resistor Design	5
6.	Cooling Considerations for 2 MJ Dumps	10
7.	Dump Resistor Running Losses and Interlocks	11
8.	Dump Resistor Cable Size	13
9.	Material Resistance Measurement	14
10.	Final Choice of Bar Length for Dump Resistor Sections	15
11.	Dump Resistor Assembly Procedure	15
12.	Dump Resistor Test Data	16
13.	Acknowledgments	18
14.	Drawings ATV042589MTF ATV050989MTF ATV060489MTF ATV051189MTF ATV051089MTF ATV060189MTF ATV060289MTF ATV053189MTF ATV053089MTF	

1. SUMMARY

This report contains the design notes of a 2 MJoules 10,000A, 1000V, dump resistor, with taps from 25 mOhms to 300 mOhms maximum. The resistor is forced air-cooled and can handle continuously one 2 MJ dump every 5 minutes at all taps. The resistor is made from 304 stainless steel bars and is mounted in a 90"H x 24"W x 20"D steel enclosure, with easy access to taps.

The upper resistance sections are made lighter to save material cost and weight. The total weight of the resistance element is 427 lbs.

The resistor is used to absorb the stored energy from cryogenic magnets during tests at the magnet test facility. Interlocks are provided for remote tap readout, dc over current and over temperature. A build-in current sensor and timing relay switch forced air-cooling on for 5 minutes, after a dump.

2. AS BUILT DUMP RESISTOR PARAMETERS

nominal resistance taps at	: 25, 50, 100, 150, 200, 250, 300 milliOhms[1)]
peak current	: 10,000A
rms current	: 500A at 100 mOhms
peak voltage	: 1000V
power rating	: one 2 MJ shot per 300 seconds continuous at all taps
cooling	: forced air for 5 min. after a dump
temperature rise	: 110°C peak, estimate
ambient temperature	: 40°C maximum
insulation temp. class	: 210°C
control power	: 120 Vac, approx 5 A
enclosure size	: 90"H x 36"W x 20"D, indoor
approx. weight	: 1000 lbs.

(1) See test data for exact values

3. MTF DUMP RESISTOR DESIGN REQUIREMENTS

Design a dump resistor R_D as follows:

1. 10,000A, 1000V maximum
2. $300 \times 10^{-3}\ \Omega$ maximum
3. 6 taps at $50 \times 10^{-3}\Omega$ intervals
4. energy dissipation at each tap, 2 MJ
5. one 2 MJ dump/$_{5\ min}$, 6 dumps/$_{hr}$
6. install remote tap setting readout

4. GENERAL DESIGN APPROACH

The temperature rise of the dump resistor steel is:

$$\Delta T = \text{constant} \times \frac{P}{W}\ ^{o}C$$

P is the instantaneous dump energy

W is the weight of the dump resistor steel

The dump resistor could be designed as shown in fig. 1.

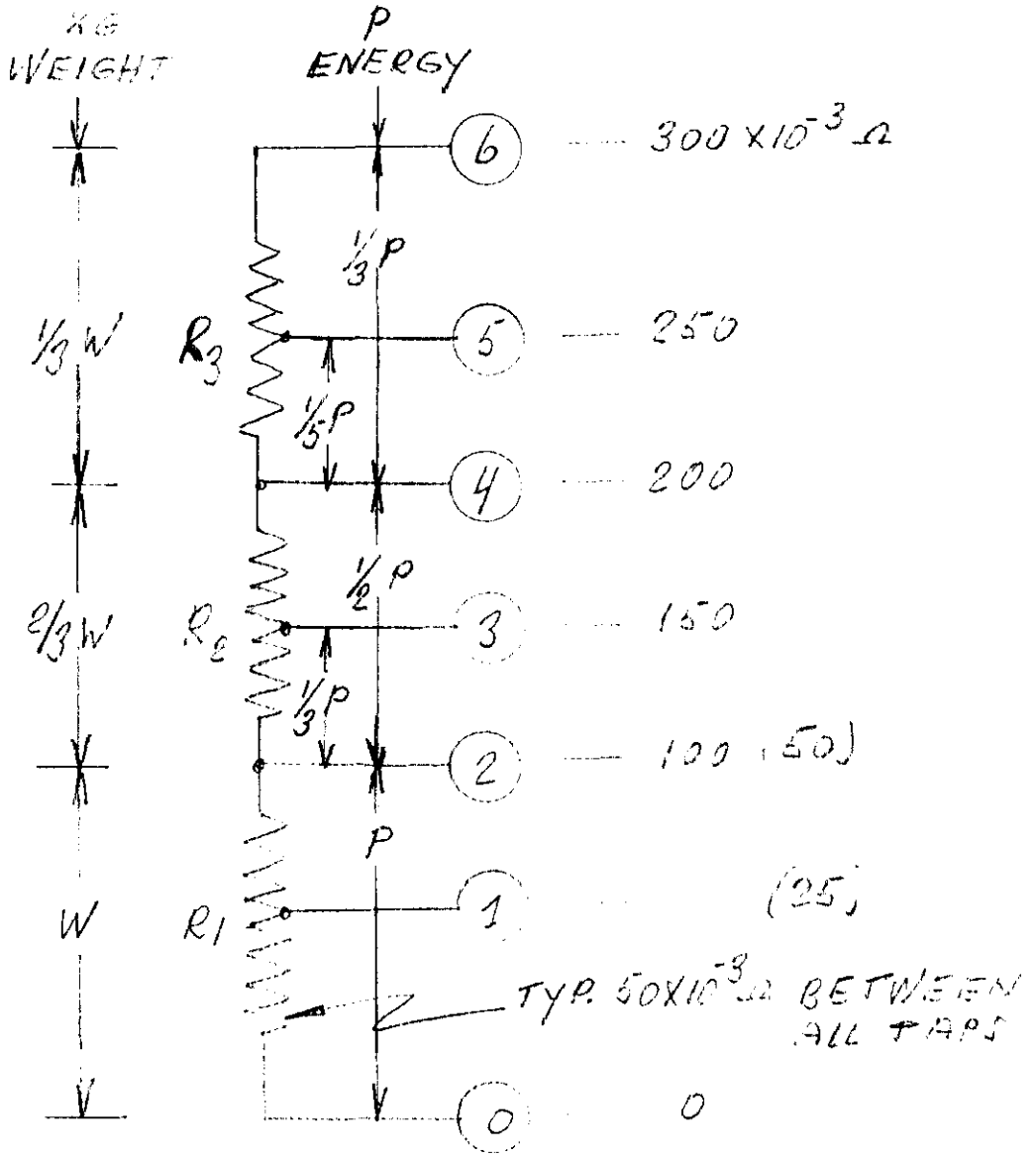

FOR $25 \times 10^{-3}\,\Omega$, 2MJ AT 0/1 JUMPER 0/2
FOR $50 \times 10^{-3}\,\Omega$, 2MJ AT 0/2 JUMPER 0/4

Dump Resistor General Design
Fig. 1

The dump resistor shown in fig. 1 is a reasonable approach. It consists of 3 sections of $100 \times 10^{-3}\Omega$ each with a center tap. The weight of the sections changes for the higher values because the power dumped in those is a fraction of P. Making three resistor sections with different weights saves about 30% of the SS material cost. Each resistor section can be made from different size #304 stainless steel flat bars. These bars are commercially available in a large variety of sizes in 12 ft. length. Stainless steel type 304 has a reasonably high specific resistance and is therefore practical.

The amount of energy dumped in a kg of steel determines the temperature rise, assuming no losses to the ambient.

$$W = \frac{1/2LI^2}{C\,\Delta T} \text{ kg}$$

$\frac{1}{2} LI^2$ = stored energy dumped in R_D, in Joules

C = specific heat of R_D steel in Joules/^{o}Ckg

ΔT = temp. rise in ^{o}C

No. 304 stainless steel has the following listed properties:

specific heat C ~ 500 Joules/^{o}C kg

specific resistance at 20 ^{o}C	=	$72 \times 10^{-6}\ \Omega$ cm
resistance temp. coeff. per ^{o}C	=	0.00094
$R_{90^{o}C}$	=	1.066 $R_{20^{o}C}$
specific weight	=	0.00784 kg/cm3

A stainless steel bar, 1 ft. long with a crossection of 1 $inch^2$ has the following properties:

$R/_{ft}$, 1 $inch^2$, 20°C	=	$0.34 \times 10^{-3}\ \Omega$
$R/_{ft}$, 1 $inch^2$, 90°C	=	$0.362 \times 10^{-3}\ \Omega$
weight/ft, 1 $inch^2$	=	3.4 lbs.

The temperature rise limit can be set by choosing the weight of the resistor steel large enough so that the temperature rise ΔT for a 2 MJ dump does not exceed 50° C. Each individual 100 mΩ resistor section can be designed, based on the resistance, temperature rise and power dissipation requirements.

5. DUMP RESISTOR DESIGN

5.1 R1, 100 mΩ, 2 MJ Section

The amount of energy dumped in R_1 is at worst 2 MJ. Limiting the temperature rise to 50 °C yields:

$$W > \frac{2 \times 10^6}{500 \times 50} = 80 \text{ kg } (176.4 \text{ lbs})$$

Section R_1 requires therefore a piece of stainless steel that has a resistance of $100 \times 10^{-3}\ \Omega$ and weighs at least 176 lbs. Let the crossection of the stainless steel bars be S $inch^2$ with a total length of L ft. This choice has to satisfy:

$$3.4\ SL > 176 \text{ lbs (weight, temp. requirements)}$$

and

$$\frac{0.34 \times 10^{-3}}{S} L < 100 \times 10^{-3}\ \Omega \text{ (resistance requirement)}$$

Solve: $S = 0.42\ inch^2$

$L = 123.5$ ft.

Choose:

304 SS, 3/16 x 2-1/2, 12 ft long flat bar.

1.594 $lbs/_{ft}$, 0.46875 $inch^2$

$R_{20}oC = 0.725 \times 10^{-3}\ \Omega/ft$

$R_{90}{}^{o}C = 0.773 \times 10^{-3}\ \Omega/ft$

Need 138 ft for $100 \times 10^{-3}\ \Omega$ at 20°C

<u>Semi- Final Choice Section R_1:</u>

Buy 12 - 12 ft length, cut to 11 ft
Total 132 ft, $\frac{3}{16} \times 2\frac{1}{2}$

$R_{20\ oC} = 95.7 \times 10^{-3}\ \Omega$

$R_{90\ oC} = 102 \times 10^{-3}\ \Omega$

$W = 210.4$ lbs (114.3 kg)

$\Delta T = 42^{o}C$ at 2 MJ

$P = 9.5$ kJ/lb

The resistance of the purchased material needs to be checked so that the final cutting length can be calculated.

5.2 R_2, 100 mΩ, 1.33 MJ Section

The amount of energy dumped in R_2, Section 2-3 (Fig.1) is $\frac{1}{3}$ P maximum and $\frac{1}{2}$ P maximum for total R_2. Assume for calculation purposes that the amount of energy dumped in R_2 is at worst $\frac{2}{3}$ x 2 MJ.

The weight of R_2 > 2/3 x 176 = 117 lbs

Thus:

$$3.4\ SL > 117\ \text{lbs}$$

$$\frac{0.34 \times 10^{-3}}{S} L < 100 \times 10^{-3}\ \Omega$$

Solve:

$$S = 0.34\ \text{inch}^2$$

$$L = 101.2\ \text{ft}$$

Choose:

304SS, 3/16 x 2, 12 ft long flat bar.
1.275 $\text{lbs}/_{\text{ft}}$, 0.375 inch^2

$$R_{20^oC} = 0.9066 \times 10^{-3}\ \Omega/\text{ft}$$

$$R_{90^oC} = 0.9665 \times 10^{-3}\ \Omega/\text{ft}$$

need 110 ft for $100 \times 10^{-3}\ \Omega$ at 20°C

Semi-Final Choice Section R_2:

Buy 10 - 12 ft, cut to 11 ft

Total 110 ft, 3/16 x 2

R_{20^oC} = $99.7 \times 10^{-3}\ \Omega$

P_{90^oC} = $106.3 \times 10^{-3}\ \Omega$

W = 140.2 lbs

ΔT = 42°C at 1.33 MJ

P = 9.5 kJ/lb

5.3 R3, 100 mΩ, 0.67 MJ SECTION

The amount of energy dumped in R_3, Section 4-5 (Fig. 1) is 1/5 P maximum and 1/3 P maximum for total R_3. Assume for calculation purposes, that the amount of energy dumped in R_3 is at worst 1/3 x 2 MJ.

The weight of R_3 > 1/3 x 176 = 58.6 lbs

Thus: $3.4\ SL > 58.6$ lbs

$$\frac{0.34 \times 10^{-3}}{S} L < 100 \times 10^{-3}$$

Solve: S = 0.242 inch^2
L = 71.1 ft

Choose:

304 SS, 3/16 x 1-1/2, 12 ft long flat bar

0.9563 lbs/ft, 0.28125 inch^2

R_{20^oC} = $1.209 \times 10^{-3} \Omega/ft$

R_{90^oC} = $1.289 \times 10^{-3} \Omega/ft$

Need 82.7 ft for $100 \times 10^{-3} \Omega$ at 20°C

<u>Semi-Final Choice Section R3:</u>

Buy 8 - 12 ft, 3/16 x 1-1/2, cut to 10 ft

Total 80 ft, 3/16 x 1-1/2

R_{20^oC} = $96.7 \times 10^{-3} \Omega$

R_{90^oC} = $103.1 \times 10^{-3} \Omega$

W = 76.5 lbs

ΔT = 38.4 °C at 0.67 MJ[1)]

P = 8.7 kJ/lb

1) ΔT = 45.9 °C for section 4-5 at 0.4 MJ

6. COOLING CONSIDERATIONS FOR 2 MJ DUMPS

$$2\ MJ/_{5\ min} = 2000\ kWsec/_{300\ sec}$$

The continuous equivalent power dissipation is 6.7 kW for one 2 MJ shot every 5 minutes. The R_1 surface area is: $12x11x12x5\frac{3}{8}$ = 8514 $inch^2$.

The power dissipation for R_1 is approximately 0.78 $watt/_{inch}2$.

Copper bars in free still air give ΔT = 65°C rise at ~0.5 $watt/_{inch}2$. Forced air-cooling at ~200 $ft/_{min}$ reduces the thermal impedance by a factor ~2. With fans installed, the dump resistor temperature fluctuates approximately as shown in fig. 2.

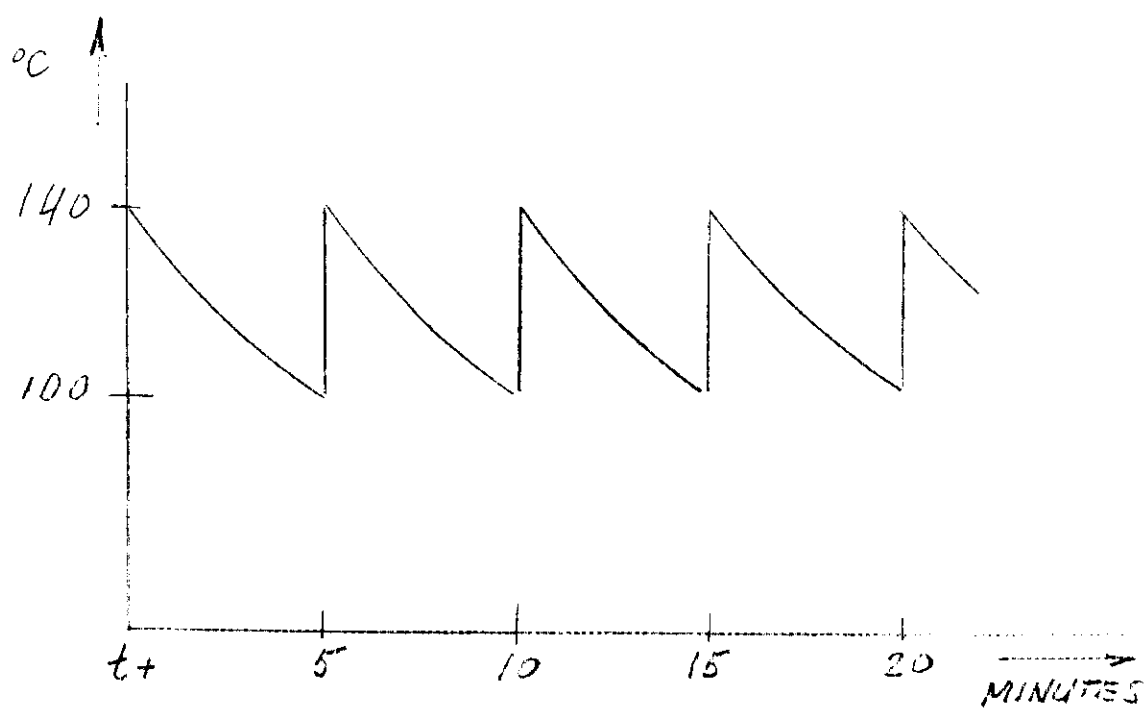

Estimated dump resistor operating temperature with continuous 2 MJ dumps at 5 minute intervals.

Fig. 2

Choose: 1 - insulation: class 210°C for the resistor support spacers.

2 - fans on for 5 minutes after dump

3 - R_D thermal intlk. ~120°C klixon.

7. DUMP RESISTOR RUNNING LOSSES AND INTERLOCKS

The dump resistor is in parallel with the run SCR's of the dump switch and will carry some part of the dc current as shown in fig 3.

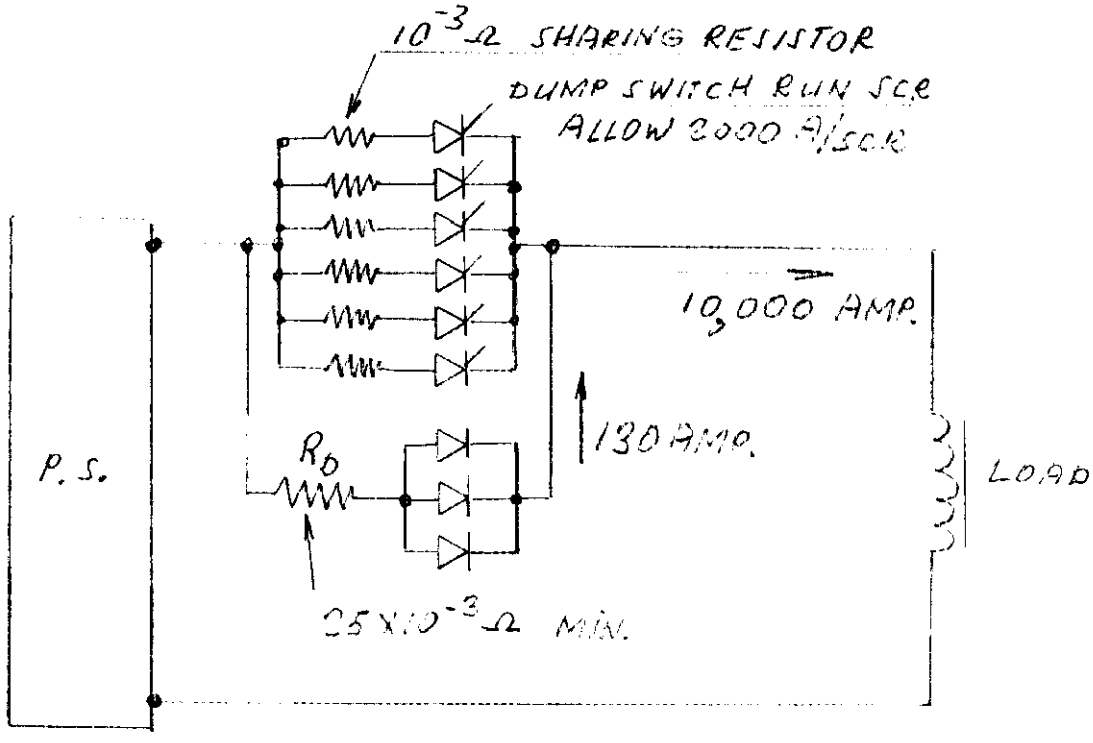

Basic electrical power diagram indicating operating current flow.

Fig. 3

The maximum running losses occur with the $25 \times 10^{-3}\Omega$ tap connection for R_D.

$$\text{Max } V_{RD} = 2000 \times 10^{-3} + V_{SCR} = 3.3 \text{ Volt}$$
(Maximum run SCR and sharing resistor voltage drop)

$$I_{RD} = \frac{3.3}{25 \times 10^{-3}} = 130 \text{ A normal running at } 25\ m\Omega \text{ tap.}$$

R_D running loss	=	435 Watt max.
R_D R1 surface	=	8500 $inch^2$
R_D running power dissipation	=	0.05 $Watt/_{inch}{}^2$ max.

The estimated worst ΔT is approximately 15°C running.

A run SCR's turn-on (gating) failure can result in excessive dc current through R_D. In that case R_D will heat up and 120°C klixons at R_D will trip the power supply.

A dc current sensor has also been installed at the power terminals of the dump resistor. It trips at about 300 Adc and prevents operation with large dc currents through the dump resistor or the dump resistor power cables. Large dc currents will occur with bolted shorts at the tap board or with run SCR gating failures.

The dc current sensor CS is simply a proximity switch (reed switch) mounted in the vicinity of the dump resistor power terminal bus. The contacts of a proximity switch will close as a result of the magnetic field created by the current flowing through the bus close to the switch.

It is an elegant solution, because it requires no control power and the contacts can be used directly in a 120 Vac control circuit. A similar current sensor starts the cooling fans after a dump.

The dump resistor is equipped with a "valid tap" interlock. It is possible to connect the tap links for a wrong combination. Interlocks at the taps keep the power supply off as a result of wrong tap connections. Remote tap position readout and interlock contacts have been provided. These interlock contacts must be used to prevent high operating currents when high resistance tap settings exist. Destructive high dump voltages, in excess of 1000V, will occur if a combination of high operating currents and high dump resistor values are permitted.

Drawing #ATV060489MTF shows the interlocks.

WARNING

Bolted shorts should not be installed at the dump resistor. A 10,000A rated shorting strap must be installed at the power connections to the dump switch if $R_D = 0\ \Omega$ is required for tests.

8.0 DUMP RESISTOR CABLE SIZE

The dump resistor sees 2 MJ every 300 sec. The highest current values occur at the 25 x $10^{-3}\Omega$ tap setting, which yields the highest rms current I in the R_D power cables.

$$I^2 x 25 x 10^{-3} x 300 = 2000.000$$

$$I = 516 \text{ Amp.}$$

Thus the equivalent rms value of continuous dumps every 5 minutes would be 516 Amp. Connect the dump resistor with 3 x 2/0 cables in parallel

Cable Ampacity 3x185 = 555 Amp. for 90°C cable insulation.

Cable O.D. ~0.54"

9. MATERIAL RESISTANCE MEASUREMENT

DUMP RESISTOR S. STEEL TEST, OF MATERIAL RECEIVED

MATERIAL SS#304	CALCULATED $R_{20^oC/ft}$ $x10^{-3}\Omega$	MEASURED $R_{20^oC/ft}$ $x10^{-3}\Omega$ 1)
3/16 x $2\frac{1}{2}$	0.725	0.6615*
3/16x2	0.9066	0.9117*
3/16 x $1\frac{1}{2}$	1.209	1.2271*

*adjusted for 20°C, material was tested at 32°C.

1 - Method: Put 5A through 8 ft. length, measure volt. drop in mV and divide by 40 for $m\Omega/_{ft}$.

NOTE: Published 304 resistance temp coeff = 0.00094 per °C.

CALCULATE:

3/16 x 2-1/2	$R/_{ft}$ at 100°C		=0.7112 mΩ
3/16 x 2	"	=	0.9803 mΩ
3/16 x 1-1/2	"	=	1.3194 mΩ

10. FINAL CHOICE OF BAR LENGTH FOR DUMP RESISTOR SECTIONS

Calculate the final bar length of the dump resistor sections from the test data of para. 9. Make R_D 300 mΩ at 100°C.

1. R_1 length $\frac{100}{0.7112}$ = 140.6 ft.

   24 pcs 70.3" long each

2. R_2 length $\frac{100}{0.9803}$ = 102 ft.

   20 pcs 61.2" long each

3. R_3 length $\frac{100}{1.3194}$ = 75.792 ft.

   16 pcs 56.8" long each

11. DUMP RESISTOR ASSEMBLY PROCEDURE

This procedure yields 50 mΩ dump resistor sections at 100°C, based on the measured resistance of the 304 SS bars received.

Cut the stainless steel bars to the following length:

3/16 x 2-1/2, 24 pcs, 70.3" long, bend offset 22 pcs

3/16 x 2, 20 pcs, 61.2" long, bend offset 18 pcs

3/16 x 1-1/2, 16 pcs, 56.8" long, bend offset 14 pcs

Stack pcs per drw. #ATV050989MTF line up ends at 0', weld together, weld stops, install tap board and mount assembly to enclosure backplate.

Remove center clamp top channel, cut slots in lower insulator for klixons, install 2 layers kapton between klixons and resistor steel. Reassemble.

Put R_D in enclosure.

Make 2-7/8 dia. hole in enclosure top for R_D cables.

Install fans, wiring and control cable hole.

Hipot -2500 VDC 1 min, measure resistance at various taps.

12. DUMP RESISTOR TEST DATA

Date of test: January 1990

1. Measured resistance of stainless steel length between tap:

	*milliOhms at 20°C
0 - 1	44.70
1 - 2	45.19
2 - 3	44.18
3 - 4	44.11
4 - 5	45.42
5 - 6	45.28

*Accuracy ±0.05%

2. Measured resistance at nominal tapsetting:

Nominal tap milliohms	Measured milliohms at		
	*20°C	100°C [1)]	150°C [1)]
25	22.52	24.21	25.05
50	44.61	47.96	49.62
100	89.93	96.69	100.02
150	134.13	144.22	149.18
200	178.80	192.25	198.86
250	224.46	241.34	249.65
300	269.73	290.01	300.00

*accuracy ±0.05%
1)calculated from 20°C

3. CS1 pickup 312 A, dropout 285 A
   CS2 pickup 284 A, dropout 280 A

4. High potential test
   1 minute at 2500VDC >5000 MΩ

5. All interlocks checked OK

13. ACKNOWLEDGEMENTS

The resistor was assembled by EED personnel. Don Carpenter and Bob Oudt supervised the mechanical construction and Walt Jaskierny the electrical wiring and testing. I am grateful for their competent support.

FERMILAB
ENGINEERING NOTE

SECTION	PROJECT	SERIAL/CATEGORY	PAGE
EED-BS	MTF	C 700 C	

SUBJECT: MTF DUMPRESISTOR, 2MJ, $300\times10^{-3}\Omega$ 10000A - 1000 V QUENCH SW

NAME: A.T. VISSER

DATE: 4/25/89 REVISION DATE:

DRW# ATV042589 MTF REV 3 11/10/89

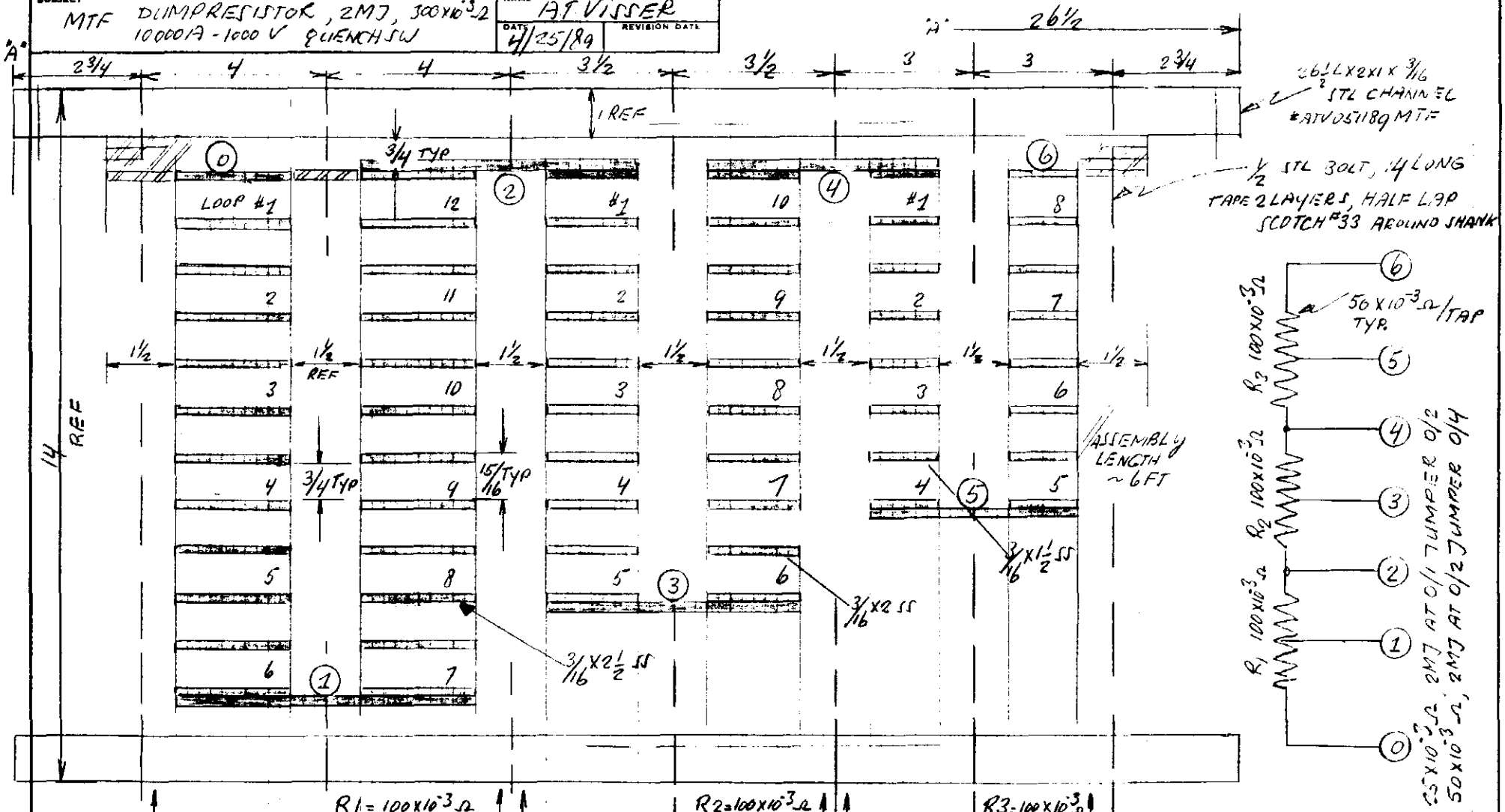

FERMILAB ENGINEERING NOTE	SECTION	PROJECT	SERIAL-CATEGORY	PAGE
	EED-BS	MTF	G.TOOL	

SUBJECT: MTF DUMPRESISTOR, 2MJ, $300 \times 10^{-3}\,\Omega$, 10.000 A - 1000V, QUENCH SW

NAME: A.T. VISSER

DATE: 5/9/89 REVISION DATE:

DRW#. ATV 05 09 89 MTF REV2

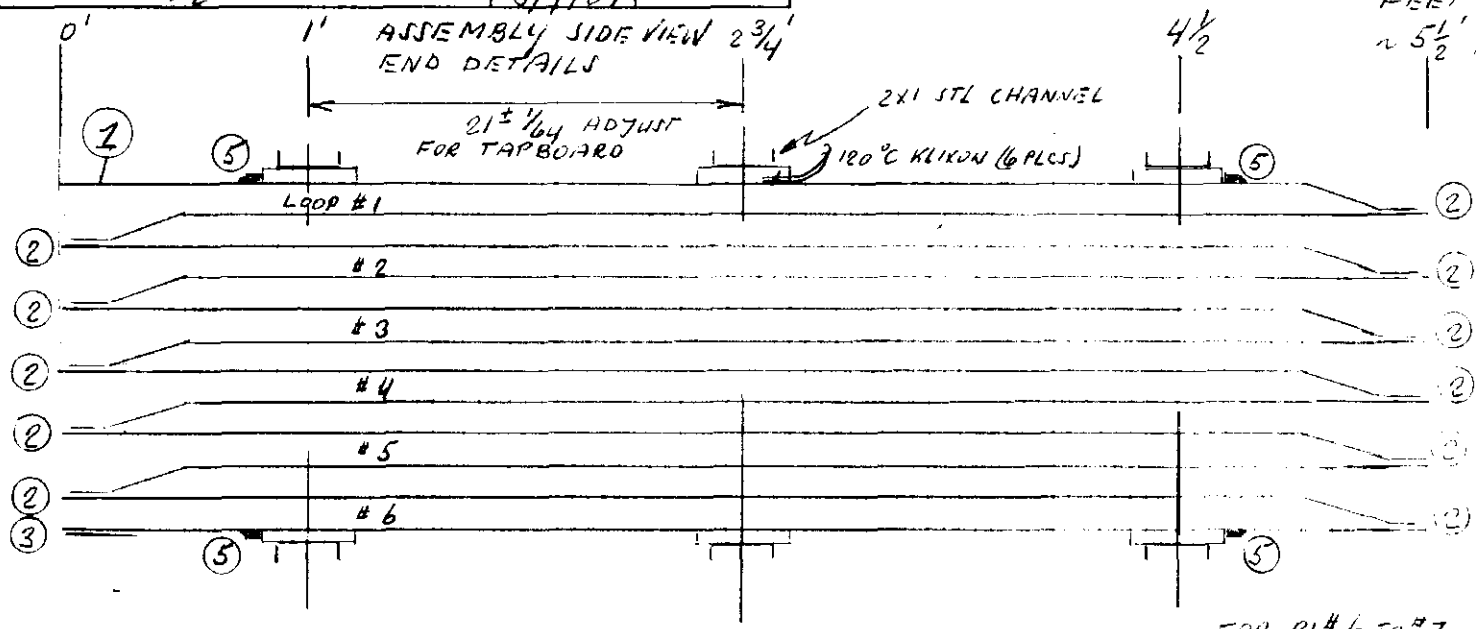

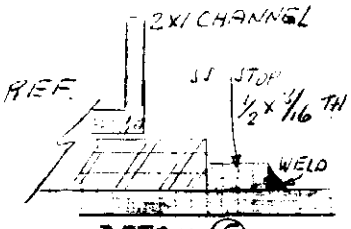

DETAIL (5) 24 PLCS
TYP. STOP

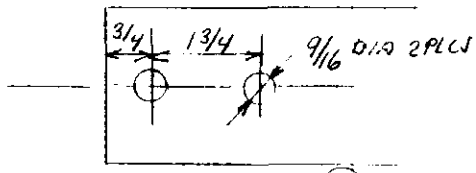

DETAIL (1)
FOR R_1 #1 START
R_3 #8 FINISH

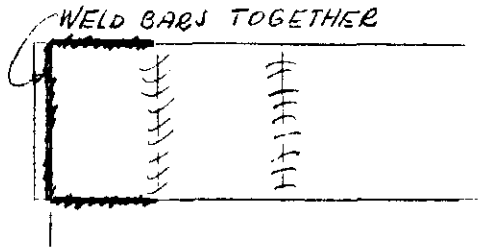

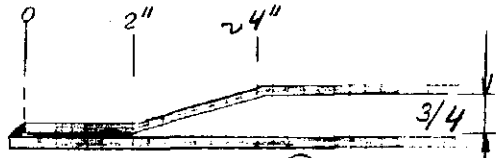

DETAIL (2)
FOR R_1 #1 TO #2 ETC.
R_2 #1 TO #2 ETC.
R_3 #1 TO #2 ETC.

FOR R_1 #6 TO #7, R_2 #5 TO #6
R_1 #12 TO R_2 #1, R_2 #10 TO R_3 #1
R_3 #4 TO #5

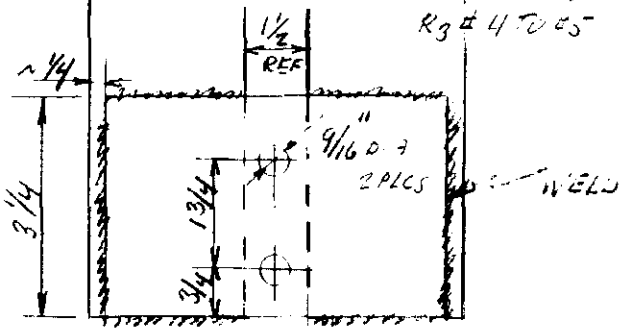

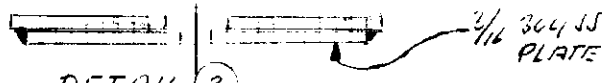

DETAIL (3)

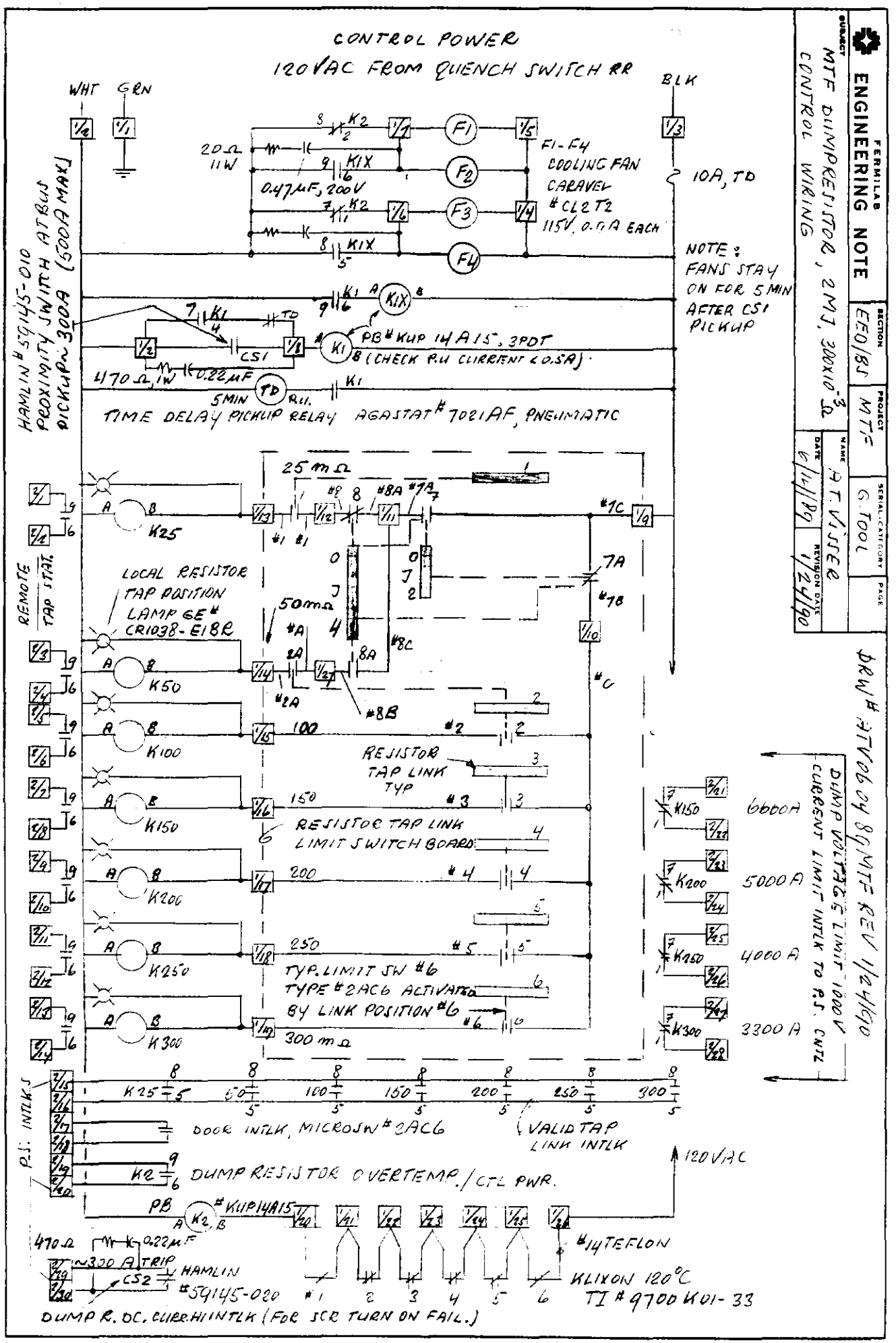
CONTROL POWER
120VAC FROM QUENCH SWITCH RR
WHT
GRN
BLK
20Ω 11W
0.47μF, 200V
F1-F4 COOLING FAN CARAVEL #CL2T2 115V, 0.6A EACH
10A, TD
NOTE: FANS STAY ON FOR 5 MIN AFTER CS1 PICKUP
HAMLIN #59145-010 PROXIMITY SWITCH AT BUS PICKUP ~300A (500A MAX)
PB #KUP 14A15, 3PDT
(CHECK R.U. CURRENT <0.5A)
470Ω, 1W
0.22μF
5MIN
R.U.
TIME DELAY PICKUP RELAY AGASTAT #7021AF, PNEUMATIC
25mΩ
50mΩ
300mΩ
REMOTE / TAP STAT.
LOCAL RESISTOR TAP POSITION LAMP GE# CR1038-E18R
RESISTOR TAP LINK TYP
RESISTOR TAP LINK LIMIT SWITCH BOARD
TYP. LIMIT SW #6 TYPE #2AC6 ACTIVATED BY LINK POSITION #6
6000A
5000A
4000A
3300A
DUMP VOLTAGE LIMIT 1000V CURRENT LIMIT INTLK TO P.S. CNTL
DRW# ATV06 04 8G MTF REV 1/24/90
P.S. INTLKS
DOOR INTLK, MICROSW #2AC6
VALID TAP LINK INTLK
120VAC
DUMP RESISTOR OVERTEMP./CTL PWR.
#14 TEFLON
KLIXON 120°C TI #9700K01-33
~300A TRIP HAMLIN #59145-020
DUMP R. DC. CURR. HI INTLK (FOR SCR TURN ON FAIL.)
FERMILAB ENGINEERING NOTE
SUBJECT: MTF DUMP RESISTOR, 2MJ, 300x10⁻³Ω CONTROL WIRING
SECTION: EE0/BJ
PROJECT: MTF
NAME: A.T. VISSER
DATE: 6/14/89
SERIAL-CATEGORY: G TOOL
REVISION DATE: 1/24/90
PAGE

FERMILAB ENGINEERING NOTE	SECTION	PROJECT	SERIAL-CATEGORY	PAGE
	EED-BS	MTF	G TOOL	

SUBJECT: MTF DUMPRESISTOR, 2MJ, $300 \times 10^{-3}\ \Omega$ 10,000A - 1000V QUENCH SW. SUPPORT CHANNEL

NAME: A.T. VISSER

DATE: 5/11/84

REVISION DATE:

DRW# ATV051184 MTF REV 0

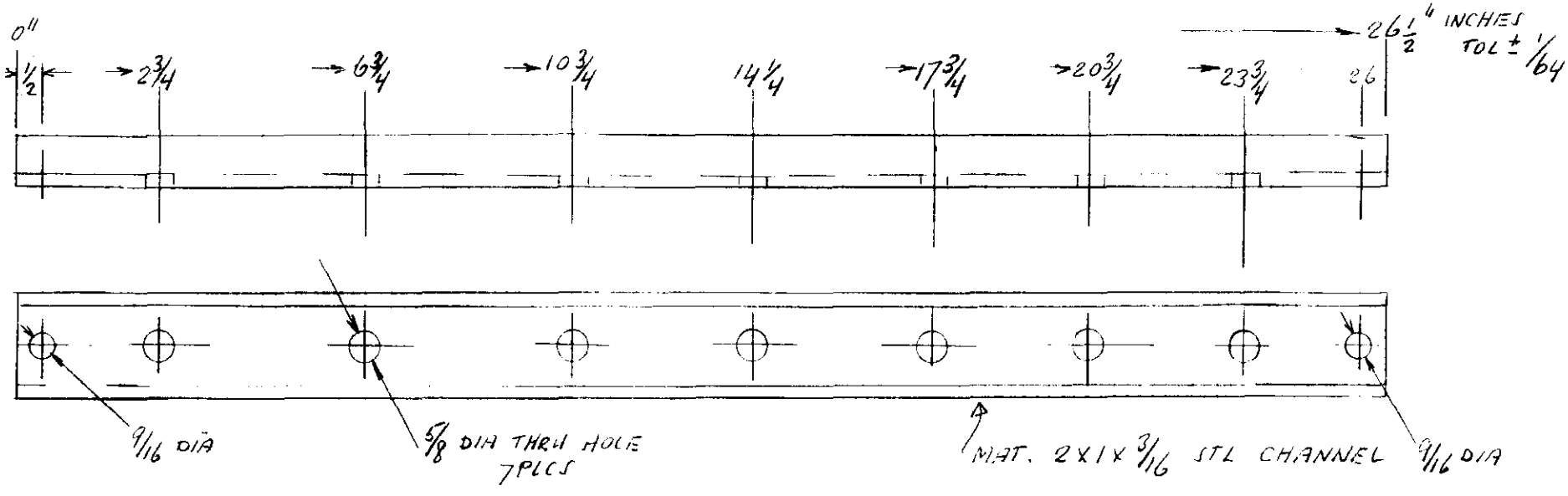

PAINT: PRIME
GLOSS BLACK

MAKE 6 PCS

FERMILAB ENGINEERING NOTE	SECTION	PROJECT	SERIAL-CATEGORY	PAGE
	EED-85	MTF	G. TOOL	

SUBJECT: MTF DUMPRESISTOR, 2MJ, $300 \times 10^{-3}\,\Omega$ 10,000A - 1000V, QUENCH SW. INSULATING SUPPORTS

NAME: A.T. VISSER

DATE: 5/10/89 REVISION DATE: 9/26/89

DRW# ATV 051089 MTF REV 0

QUANTITY CHANGE

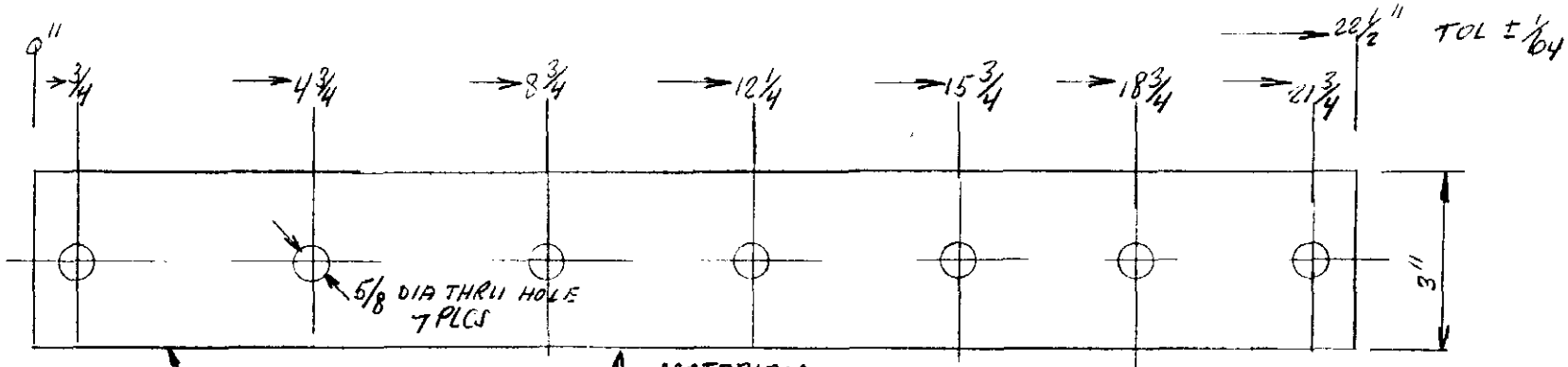

(1) 117 PCS

MATERIAL:
GLASTIC LAMINATE 210°C, 1/4 THICK
GLASTIC GRADE # SG200
GLASTIC CO. 4321 GLENRIDGE ROAD
CLEVELAND OHIO 44121-2891
TEL 216-486-0100

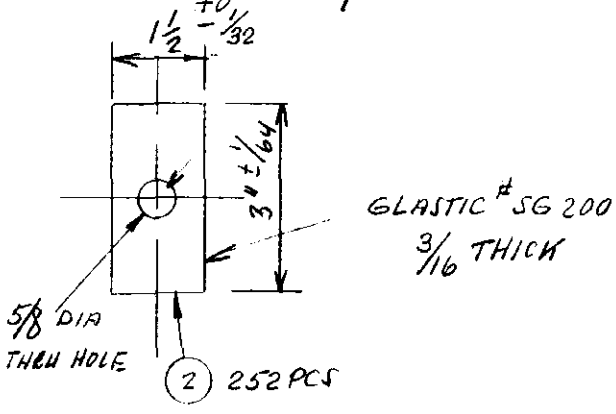

(2) 252 PCS

NOTE: ALTERNATE MATERIALS HAVING THE SAME OR HIGHER TEMPERATURE AND EL. AND MECH. PROPERTIES MUST BE SUBMITTED FOR APPROVAL BUT ARE ACCEPTABLE.

PLEASE NOTE DIFFERENT THICKNESS !!

FERMILAB
ENGINEERING NOTE

SECTION	PROJECT	SERIAL-CATEGORY	PAGE
EED BJ	MTF	G. TOOL	

SUBJECT: MTF DUMPRESISTOR, 2MJ TAP BOARD ASSEMBLY

NAME: H.T. VISSER

DATE: 6/1/31 REVISION DATE: 12/20

DRW# ATV060139 MTF REV 1

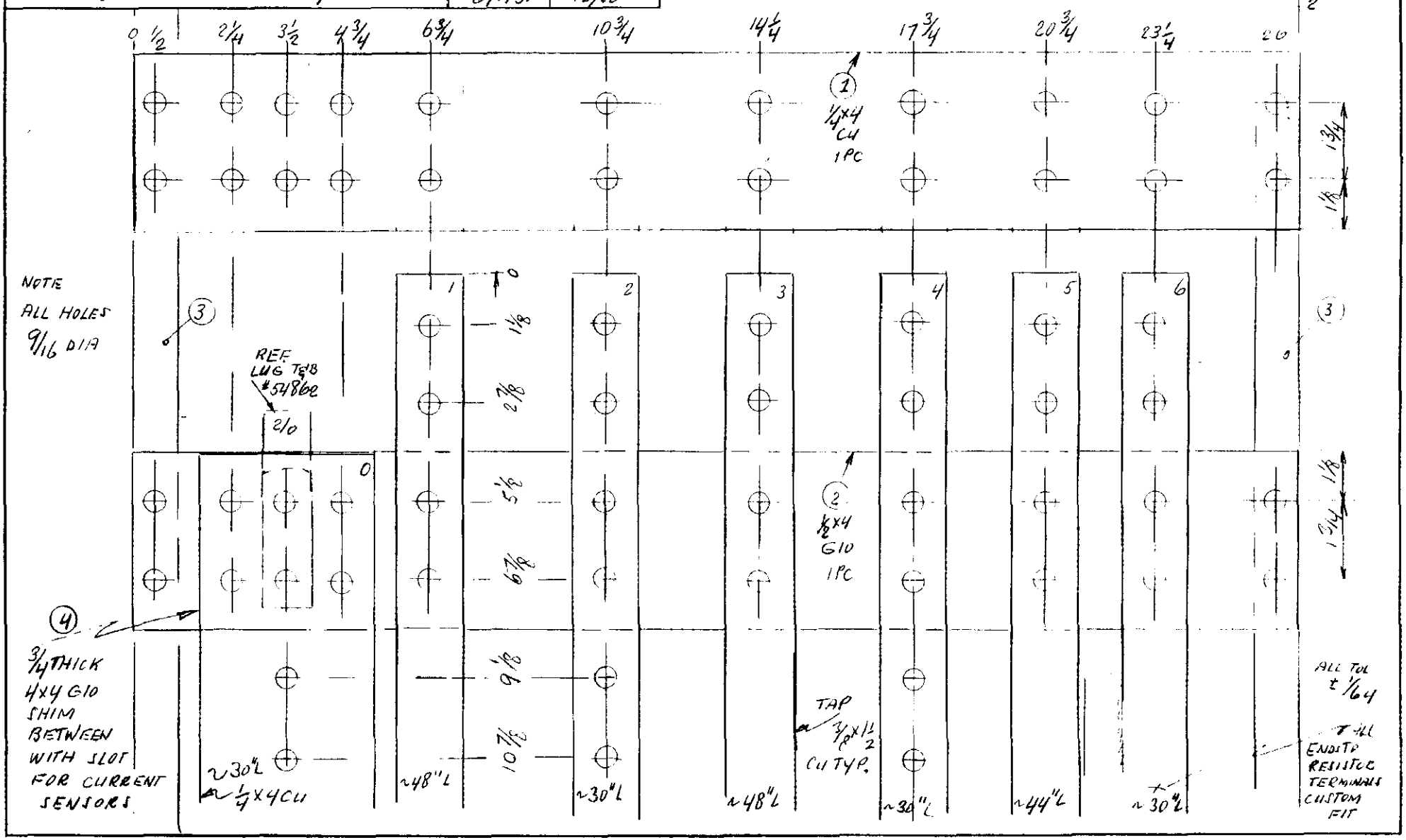

FERMILAB ENGINEERING NOTE	SECTION	PROJECT	SERIAL-CATEGORY	PAGE
	EED BJ	MTF	G. TOOL	

SUBJECT: MTF DUMPRESISTOR, 2MJ TAPBOARD PARTS

NAME: H.T. VISSER

DATE: 6/2/89 REVISION DATE: 12/20

DRW# ATV060289MTF REV2

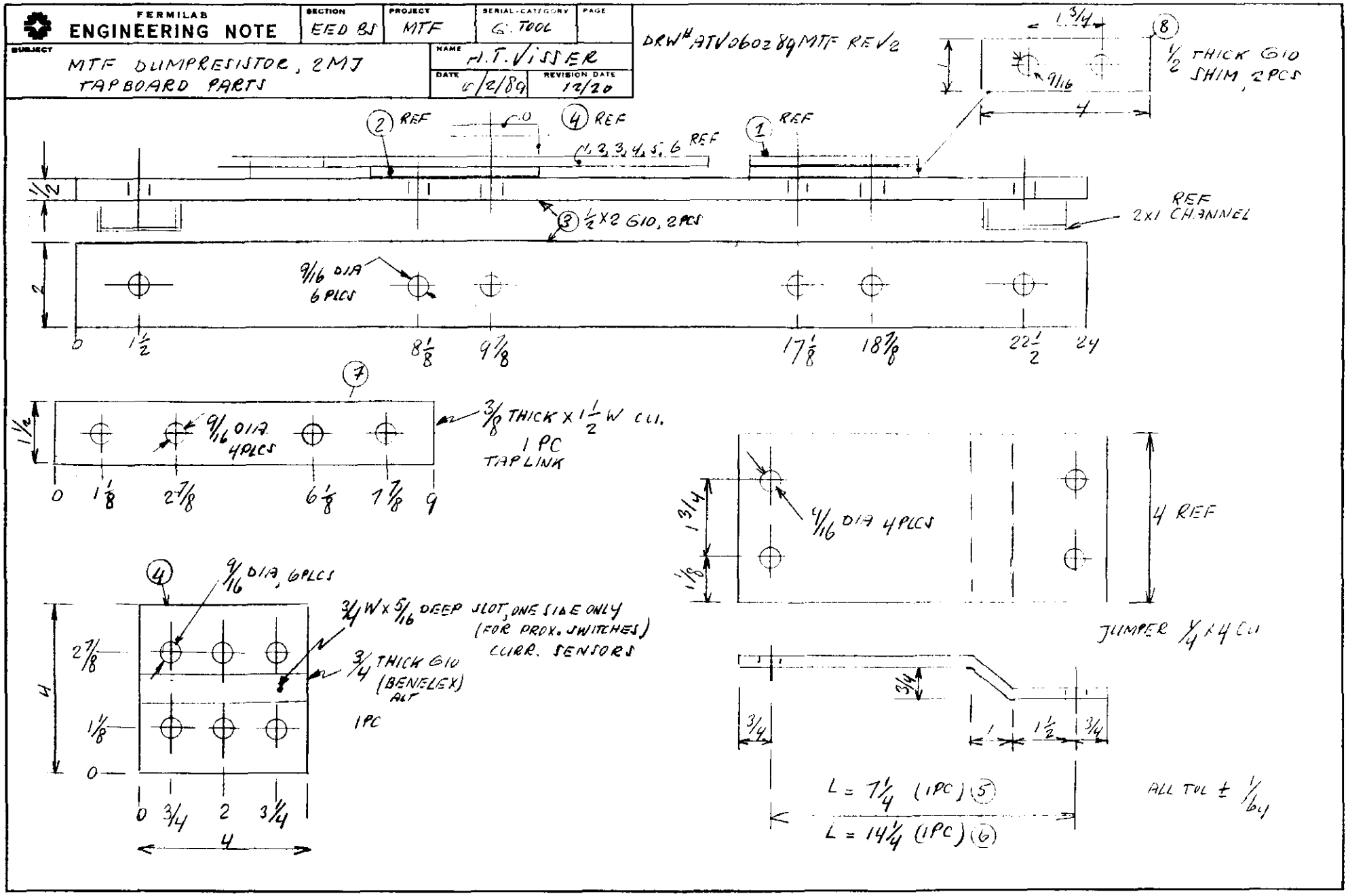

FERMILAB ENGINEERING NOTE	SECTION EED	PROJECT MTF	SERIAL-CATEGORY	PAGE
SUBJECT MTF DUMPRESISTOR ENCLOSURE FAN HOLE 10.000A, 1000V DUMPSWITCH	NAME AT VISSER			
	DATE 5/30/89	REVISION DATE		

DRW# ATV 053089MTF REV 0

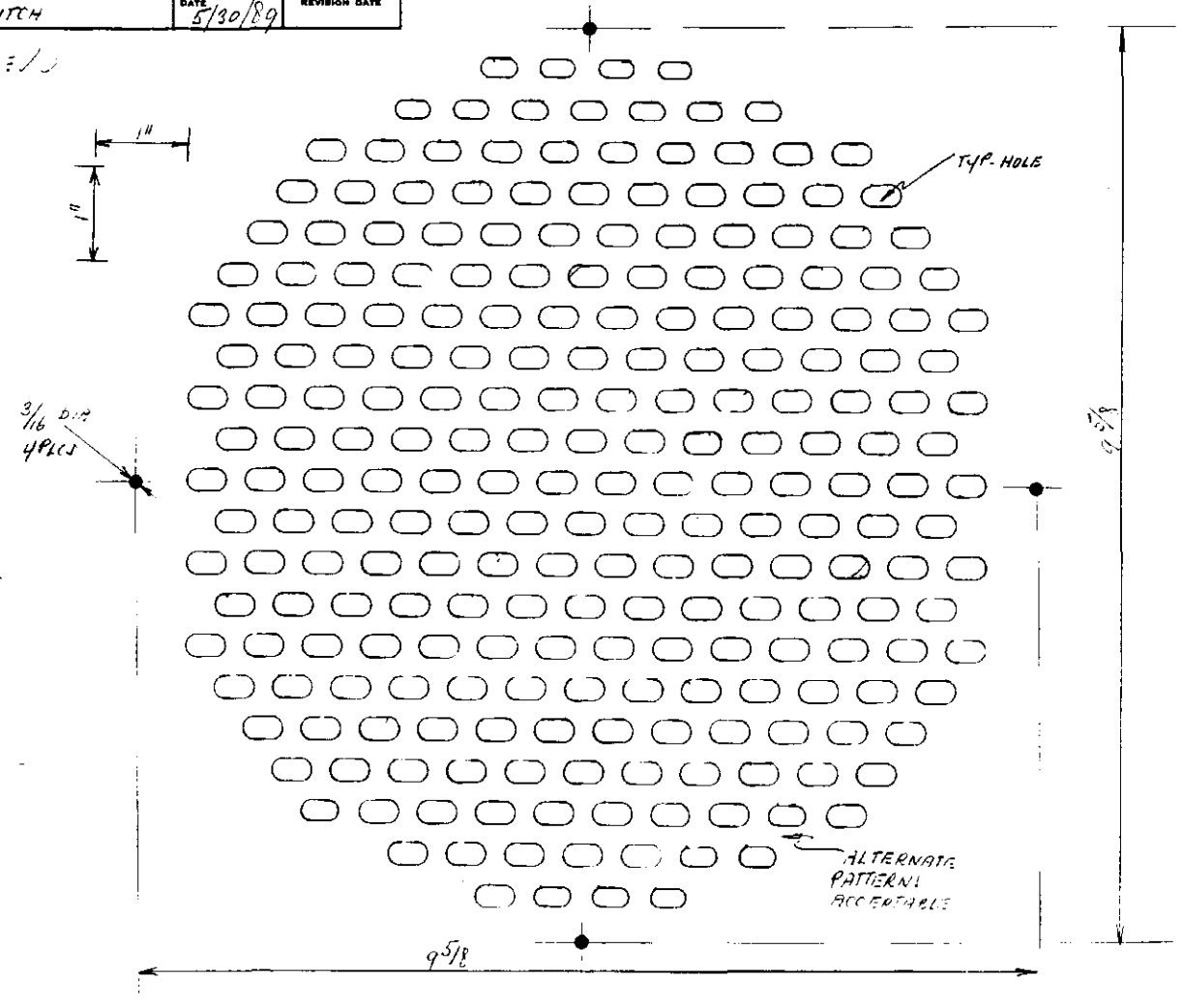

SINGLE DOOR SINGLE ACCESS ENCLOSURES

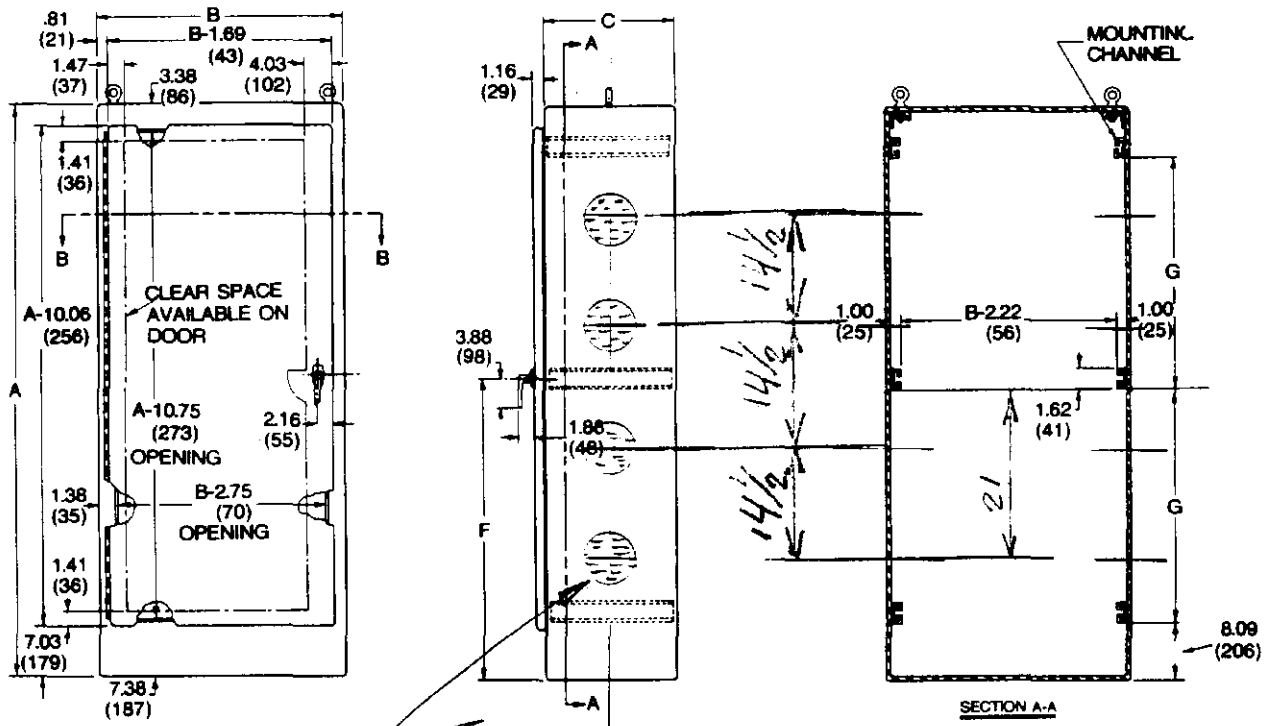

FAN HOLE PATTERN ℄
DRW# ATV05308g MTF REV 1
3 PLCS (4 PER SIDE)

NOTE: 1. Four lifting eyes are furnished if C = 30.06 (764) or more.
2. See pages 382, 384, 389, and 390 for section view A-A and B-B showing accessories.

OUTSIDE PAINT - FINISH COAT DARK BLUE
COLOR NUMBER 15180 IN FEDERAL STANDARD #595A

Table A.16

Enclosure Catalog Number	Enclosure Size AxBxC	F	G	Enclosure Catalog Number	Enclosure Size AxBxC	F	G
‡ A-602418FS	60.06x24.06x18.06 (1526x611x459)	32.03 (814)	23.12 (587)	§ A-722424FS	72.06x24.06x24.06 (1830x611x611)	38.03 (966)	29.12 (740)
§ A-722418FS	72.06x24.06x18.06 (1830x611x459)	38.03 (966)	29.12 (740)	§ A-723024FS	72.06x30.06x24.06 (1830x764x611)	38.03 (966)	29.12 (740)
§ A-723018FS	72.06x30.06x18.06 (1830x764x459)	38.03 (966)	29.12 (740)	§ A-723624FS	72.06x36.06x24.06 (1830x916x611)	38.03 (966)	29.12 (740)
§ A-723618FS	72.06x36.06x18.06 (1830x916x459)	38.03 (966)	29.12 (740)	§ A-903624FS	90.06x36.06x24.06 (2288x916x611)	47.03 (1195)	38.12 (968)
§ A-902420FS	90.06x24.06x20.06 (2288x611x510)	47.03 (1195)	38.12 (968)	§ A-723630FS	72.06x36.06x30.06 (1830x916x764)	38.03 (966)	29.12 (740)
§ A-903620FS	90.06x36.06x20.06 (2288x916x510)	47.03 (1195)	38.12 (968)	§ A-723636FS	72.06x36.06x36.06 (1830x916x916)	38.03 (966)	29.12 (740)
‡ A-603624FS	60.06x36.06x24.06 (1526x916x611)	32.03 (814)	23.12 (587)	§ A-903636FS	90.06x36.06x36.06 (2288x916x916)	47.03 (1195)	38.12 (968)

Millimeter dimensions ( ) are for reference only; do not convert metric dimensions to inch.
‡ Certified by Canadian Standards Association. Specify CSA label when ordering.
§ Certified by Canadian Standards Association. Specify CSA label when ordering. Consult factory for delivery.

DRW = ATV05318g MTF REV 1