Fermi National Accelerator Laboratory

TM-1447
0331.000

New Low-Level rf System for the Fermilab Booster Synchrotron

C. Kerns, J. Crisp, Q. Kerns, and H. Miller

Fermi National Accelerator Laboratory
P.O. Box 500
Batavia, IL 60510 USA

March 1987

*Submitted to the 12th Particle Accelerator Conference, Washington, D.C., March 16 - 19, 1987

Operated by Universities Research Association Inc. under contract with the United States Department of Energy

SUBMITTED TO THE PARTICAL ACCEL.CONF., WASHN, D.C., MARCH 16-19,1987

NEW LOW-LEVEL RF SYSTEM FOR THE FERMILAB BOOSTER SYNCHROTRON

C. Kerns, J. Crisp, Q. Kerns and H. Miller
Fermi National Accelerator Laboratory*
P. O. Box 500, Batavia, Illinois 60510

Abstract

This paper describes the Booster low-level RF system that was constructed to meet these recently added requirements: (1) synthesizer controlled capture frequency at injection, (2) very low-phase noise over the machine cycle, (3) smooth phase-lock of beam to an external reference frequency and (4) ability to accelerate either a full turn or partial turn of beam.

Introduction

The Fermilab Booster is an 8-GeV fast-cycling synchrotron. The harmonic number is 84, and the RF ranges from 30.2 MHz at 200-MeV injection to 52.813 MHz at extraction;

$$f_{RF} = \frac{h\beta c}{2\pi R} .$$

The machine radius is 75.5 meters; the guidefield is a 15 Hz biased sine wave, $B=B_{dc}-B_{ac}\cos 2\pi 15t$.

For convenience in understanding the low-level system operation, we can divide the accelerating cycle time of 1/30 second into three intervals: interval (1) T_1 to T_2, injection, capture, and bunching; interval (2) the acceleration interval; and interval (3) phase-locking. Interval (1) lasts about 2 ms, interval (2) is the rest of the acceleration time, except the phase-locking interval and, therefore, lasts about 30 ms, and interval (3) lasts 2-1/2 ms. Actually, interval (3) is whatever time the Booster takes to cover the frequency range from 52.805 MHz to 52.813 MHz, because interval (3) is started by a frequency trigger at 52.805 MHz, not by time triggers locked to B as T_1 and T_2 are.

In case phase-locking is not wanted, interval (3) disappears because the frequency trigger is withheld, and interval (2) proceeds all the way to extraction.

Figure 1 is a simplified block diagram of the Booster Low-Level RF System. In the discussion that follows, reference will be made to items on the diagram. The Booster has the capability of operating with either a full turn of beam (=84 bunches), or any partial turn from less than 84 down to about 10 bunches. In partial turn operation, the phase error and the radial position error signals are sampled each turn and held for the time of the missing bunches. Partial turns have been produced in either of two ways: (a) the 200-MeV Linac chopper length can be set to less than the time of one Booster injection turn, i.e., less than 2.8 μsec; or (b) after the injection of one or several turns of Linac beam into the Booster, kickers can be fired to extract some fraction of a turn.

Remarks on the VCO

The Voltage Controlled Oscillator (VCO) is not sufficiently stable to run the accelerator open-loop from a program, although an approximate program is supplied to the VCO. Therefore, in addition to the program, the VCO must be phase-locked to some other frequency source during each interval. These are as follows: during interval (1) the source for VCO locking is the synthesizer, during interval (2) the beam, and translated reference frequency during interval (3).

Interval (1)

During interval (1), which extends from T_1 to T_2, the VCO is locked to the synthesizer. A 200-MeV beam

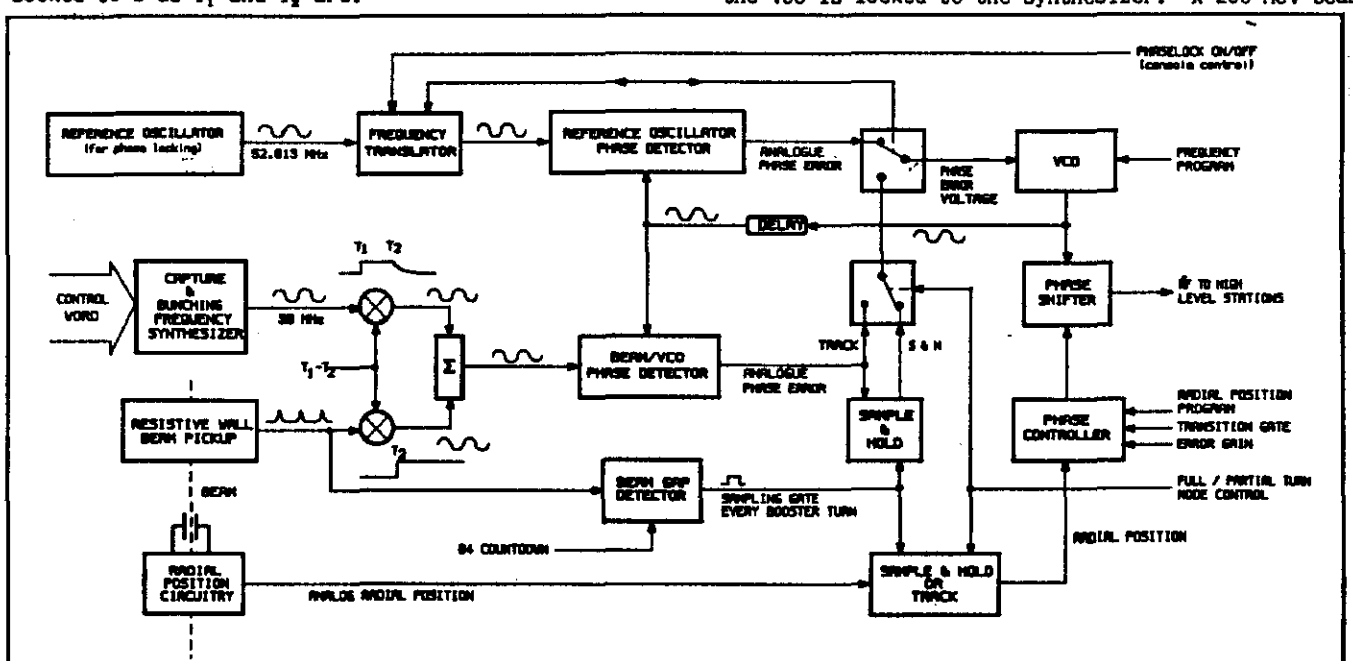

Fig. 1 Booster LLRF Simplified Block Diagram

*Operated by Universities Research Association, Inc. under contract with the U. S. Department of Energy.

from the Linac is injected, captured, and bunched by buckets at the synthesizer frequency. Normally, T_1 is set to occur before Linac injection. T_1 and T_2 may be selected in 1-μs increments. Typically the duration of the T_1-T_2 interval is 2000 μs. During this interval, from 1 to 10 Booster turns of 200-MeV H- Linac beam are injected; this takes from 2.8 to 28 μs. The coasting beam is then bunched by an adiabatic turn-on of the high level RF. The adjustments for optimum capture and bunching are currently under study.[1] One interesting feature of synthesizer-controlled capture frequency is that certain precise frequencies related to the Linac bunch frequency of 200.25 MHz are disallowed, in the sense that they give lower Booster output intensity. Prior to synthesizer control, these anomalous results were not noticed. We believe the reason they were not previously observed is because the VCO formerly was run open-loop during capture, and its phase noise smeared out the effect.

The turn-off of the synthesizer RF is done with ~100 μs decay at time T_2, approximately matching the buildup time of the 30 MHz component of bunching.

Interval (2)

During interval (2), the VCO is phase-locked to the beam. The output of the resistive wall beam pickup is sent through a 20-60 MHz bandpass filter, amplified, and used to drive the beam gap detector and the beam/VCO phase detector. The beam gap detector produces the sampling gates for phase and radial position detector signals Both the beam gap detector and the beam/VCO phase detector have a 40 db dynamic range; typical Booster intensities range from 0.5 to 2.5×10^{12} protons/turn, depending on the number of injected Linac turns. A further reduction of up to six times in beam intensity is available by notching the beam. On the other end, an increase in Booster intensity would be desirable, but the intensity-dependent emittance blowup, presently being studied,[2-6] is a limiting factor.

Partial Turns (= Notched Beam)

The sample and hold gates for phase-lock and radial position are utilized for partial turn operation. In this case the VCO is phase-locked to the "live" part of the Booster turn. In partial turn mode, even if a beam gap of 1 to 74 bunches is suddenly introduced during the machine cycle, radial and phase tracking (and acceleration!) are maintained.

The phase-locking has been bench tested to work adequately down to a single bunch/turn. The radial position circuitry[7] requires a minimum of ~10 bunches. Accurate timing of the gate signal with respect to the bunch envelope is, of course, required; given to 30-52.8 MHz frequency range, care was required to achieve the synchronization over the machine cycle, but once accomplished required no further attention.

Interval (3)

If phase-lock is desired, interval (3) is enabled by a frequency trigger. The frequency trigger is generated by a quartz crystal and phase detector that note the moment the resonant impedance of the crystal changes sign from inductive to capacitive. The frequency trigger occurs somewhat before 52.805 MHz to allow a phase-match to occur.

When so triggered, the system phase-locks to the frequency translator output instead of to the beam. The frequency translator produces from the 52.813 MHz reference oscillator a frequency downshifted initially by 8 kHz. This downshifted frequency then follows a smooth program back up to 52.813 MHz, wiping out the 8 kHz difference, and simultaneously bringing the phase difference to zero.

The effect of imposing such a frequency program on the last 2 ms of beam time rather than having the VCO remain locked to the beam, has been studied.[8] The necessary conditions for switching the VCO from beam to program include matching f, $\dot{f}$ and ϕ at the switching time. The hardware succeeds in matching ϕ to ±0.1°, f to ±50 Hz, and $\dot{f}$ to ±5%.

Beam perturbations have been acceptably small; most noticeable, a <1-mm wiggle in radius that dies out before extraction; the extraction radius is observed to be stable to the limit of the position resolution, 0.1 mm. The extraction phase is stable to 1 or 2 degrees.

Hardware Remarks

The new Booster LLRF system is in racks adjacent to the old LLRF system. Either the old or the new system can be selected from the console and used to run the Booster.

The reference oscillator can be either a local 52.813 MHz oscillator adjacent to the LLRF hardware, or a remote oscillator located in the Fermilab Main Ring RF system, about 4500 feet away. The signal is sent over on solid-copper jacketed 50Ω coax cable. This Main Ring reference is used when Booster bunches are to be locked to Main Ring buckets.

In general, the cables in RF paths leading to phase detectors are critical for phasing, and once set need to be left alone; the DELAY called out on the block diagram for instance, is 1134.1 ns. The proven technique of cut-and-try cable length adjustment to minimize all systematic phase error over the 30.2 to 52.813 MHz frequency range, was used throughout the system. The first couple of days with a brand-new system are always exciting in this respect, but later things settle down.

During the phase-locking, interval (3), it proved desirable to interrupt the dc position signal feedback loop to the phase shifter, but to permit an ac coupled loop for damping.

Interrupting the dc loop was done by going from track-to-hold with the position signal, but with one embellishment: the dc level of the hold signal was that of an earlier 10-turn average, not the instantaneous position signal (which becomes noisy at high intensity because of coupled-bunch modes, and again at low-intensity, because of circuit signal-to-noise). Some development was done to produce our own track-to-hold circuits because we could not find suitable commercial units.

Acknowledgements

The authors wish to thank Stan Tawzer, Steve Conlon and many others of the RF Department for their technical assistance. We especially thank Steve Holmes for his patience during the development of this system.

References

1. S. Stahl, C. Ankenbrandt, "Simulation of the Capture Process in the Fermilab Booster," paper L38 presented at this Conference.

2. P. Lucas, J. MacLachlan, "Simulation of Space Charge Effects and Transition Crossing in the

Fermilab Booster," paper L37 presented at this Conference.

3. K. Y. Ng, "Space-charge Effects of Transition Crossing in the Fermilab Booster," paper L42 presented at this Conference.

4. J. Crisp, "Longitudinal Beam Emittance in the Fermmilab Booster," paper L62 presented at this Conference.

5. W. Merz, C. Ankenbrandt, K. Koepke, "Transition Jump System for the Fermilab Booster," paper X55 presented at this Conference.

6. C. Ankenbrandt, S. D. Holmes, "Limits on the Transverse Phase Space Density in the Fermilab Booster." paper L20 presented at this Conference.

7. R. C. Webber, J. Fritz, S. Holmes, W. Marsh, J. Zagel, "A Beam Position Monitoring System for the Fermilab Booster," paper T3 presented at this Conference.

8. P. Lucas, Q. Kerns, "Simulation of a Programmed Frequency Shift Near Extraction from the Fermilab Booster," paper L35 presented at this Conference.