Fermilab

TM-1351
(SSC-N-31)
0102.000
2750.000

THERMAL SHIELD BOWING IN LONG SUPERCONDUCTING MAGNETS*

T. H. Nicol, M. Roman, and S. Fulton

September 1985

*Presented at the 1985 Cryogenic Engineering Conference and International Cryogenic Materials Conference, Massachusetts Institute of Technology, Cambridge, Massachusetts, August 12-16, 1985.

THERMAL SHIELD BOWING IN LONG SUPERCONDUCTING MAGNETS

T. H. Nicol, M. Roman, S. Fulton

Fermi National Accelerator Laboratory

Batavia, IL

ABSTRACT

One of the interesting problems associated with building long magnets for the SSC (Superconducting Super Collider) is predicting and controlling the dynamic response of the cryostat tubes during cooldown. Thermal bowing occurs in any of these tubes that are asymmetric in shape or which are not cooled uniformly. Understanding the bowing behavior is important for two reasons. First, one needs to know the magnitude of the induced displacements so that potential interferences in the entire magnet assembly can be located. Second, the bowing phenomenon introduces structural loads on the supports which need to be folded into the design of those supports. It is desirable, due to cost and time constraints, to develop an analytical model which accurately predicts loads and displacements rather than relying on a physical model of each candidate cryostat tube design. This report describes a procedure and an analytical model to predict this dynamic behavior on the thermal radiation shield for Fermilab's proposed SSC magnet design. The results are compared with test data obtained on a physical model fabricated and tested in an effort to verify the analytical approach.

INTRODUCTION

The job of thermal shields in superconducting particle accelerator magnets is to intercept radiated and conducted heat from the outside world before it reaches the liquid helium cooled coil assembly. Fermilab's Energy Saver magnets used liquid nitrogen and two phase helium flowing in annular stainless steel shells as thermal shields. Although effective, these shields are costly, make penetrations difficult, and require complex manifolding at the ends of each magnet.

Low cost, high reliability, and ease of assembly are important factors in the design of any accelerator, but are crucial to the viability of the proposed SSC (Superconducting Super Collider). Estimates for the total number of installed magnets range upward of 10,000. Small cost savings per magnet can make significant impacts on the total project budget.

Given these factors, it was decided early in the SSC design process that thermal shields would be aluminum and that internal flow channels

would be tubes, not annular shells. Further, it was decided that only one tube would cool each shield. This eliminates the need for complex manifolding and reduces the number of components crossing magnet junctions. The drawback is that it introduces asymmetries in shield thermal gradients during rapid cooldown.

This report describes a project designed to study the feasibility of calculating thermal distortions caused by these temperature gradients using a finite element model of an early 10 K thermal shield. Of primary concern are the deflections experienced during cooldown. This information is required in order to evaluate the need for internal constraints and bellows protection at magnet junctions.

SHIELD GEOMETRY

The SSC cryostat contains two thermal shields, one at 80 K and one at 10 K. The 10 K shield in Figure 1 is the subject of this study. Surrounded by the 80 K assembly, it has a bending stiffness one-fourth that of its 80 K counterpart and so is presumably more interesting from the standpoint of transient thermal distortions.

Essentially, the assembly consists of 2-7.62 cm ID, 0.32 cm thick tubes welded to 2-12.70 cm inside radius shells. The total length is 12.2 m. Supports are located at the center and at 1.63 and 4.88 m from center. This spacing yields equal end and mid-span deflections for the coil assembly which is supported at the same points. Off-center supports allow the assembly to slide along its length which allows free longitudinal thermal contraction.

DEFLECTION STUDY

It is desirable to be able to calculate thermal deflections in thermal shields, particularly in early design stages, so that many options may be evaluated without building prototypes of each. However, we must build and test at least one assembly in order to verify the analytical calculations.

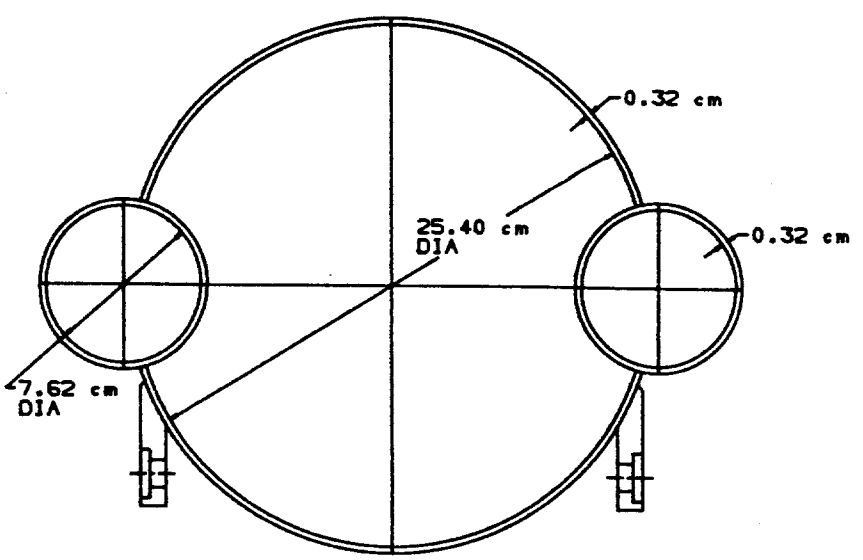

10 K SHIELD CROSS SECTION

Fig. 1. 10 K shield cross section

The first phase of this project was to build and test a half length model of the shield shown in Figure 1. The test set-up is shown if Figure 2. This set-up consisted of the shield assembly instrumented with 13 thermocouples to record temperatures during cooldown and 6 LVDT's (linear variable differential transformers) to monitor deflections. Temperatures were measured at four places along the length on both sides and the top and at one point on the bottom. Displacements were measured in the x (horizontal) and y (vertical) directions at mid-support points and at the free end of the assembly. All 19 channels of the data channels were connected to a Hewlett-Packard data acquisition system and computer which allowed measurements to be made and recorded automatically during the course of each run.

Cooling was accomplished by spraying liquid nitrogen into one of the side tubes through a full length perforated header. The tube ends were dammed to allow the tube to fill. The point of this cooling scheme was not to force a prescribed cooldown rate, but rather to apply a known, severe rate of cooldown and to measure it carefully so that it could be used as input for the analytical model.

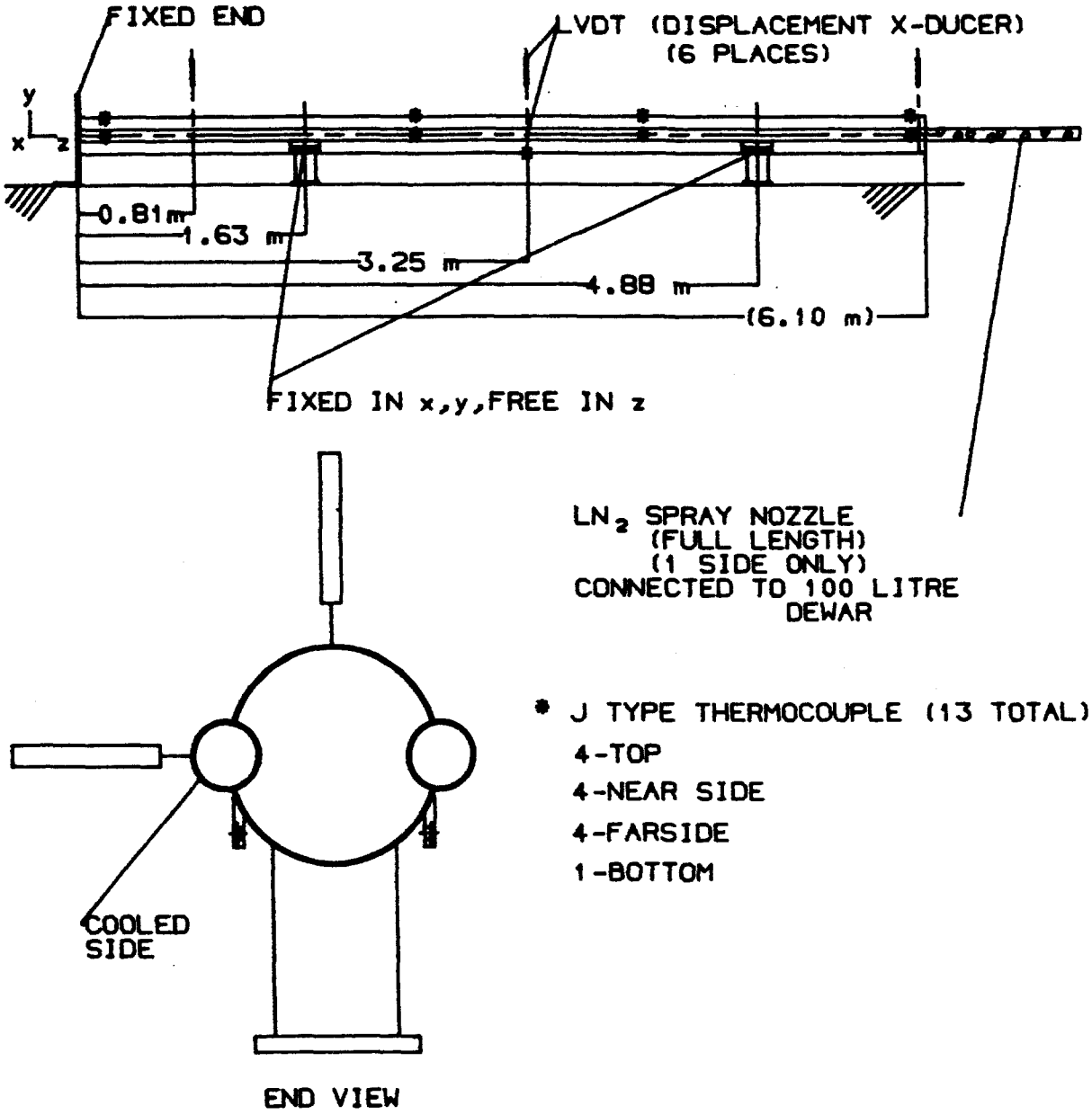

Fig. 2. Laboratory test setup

The fixed end of this physical model (left side of Figure 2) simulated the center of a full 12.2 m assembly by forcing all displacements to zero.

In an actual cryostat the 10 K shield is in insulating vacuum. However, the model was simply covered with fiberglass insulation in order to avoid the complexity of vacuum feedthroughs for instrumentation wiring and the LVDT probes.

FINITE ELEMENT MODEL

The finite element model of the shield assembly was very straightforward. As with the physical model, only half of the shield was actually simulated. Figure 3 shows a plot of part of the finite element mesh used in the simulation. The complete model contained 1586 nodes and 1680 3-dimensional shell elements.

Analysis of a model in which thermally induced displacements and stresses are to be calculated takes place in two steps. The first is a thermal pass, during which the temperatures everywhere in the model are calculated as functions of time. The second is a stress/deflection pass which reads the temperatures from the first pass and calculates the deflections and stresses resulting from thermal conditions at each time interval. For the thermal analysis pass, temperatures along the cold side of the physical model were applied as boundary conditions. For the stress pass, the boundary conditions at the fixed end were prescribed such that the model behaved as though it were a complete assembly, i.e., displacements and rotations at the symmetry plane were forced to zero. Similarly, nodes at the outer two support locations were constrained from movement in x and y directions, but were allowed free movement in z (along the axis of the model).

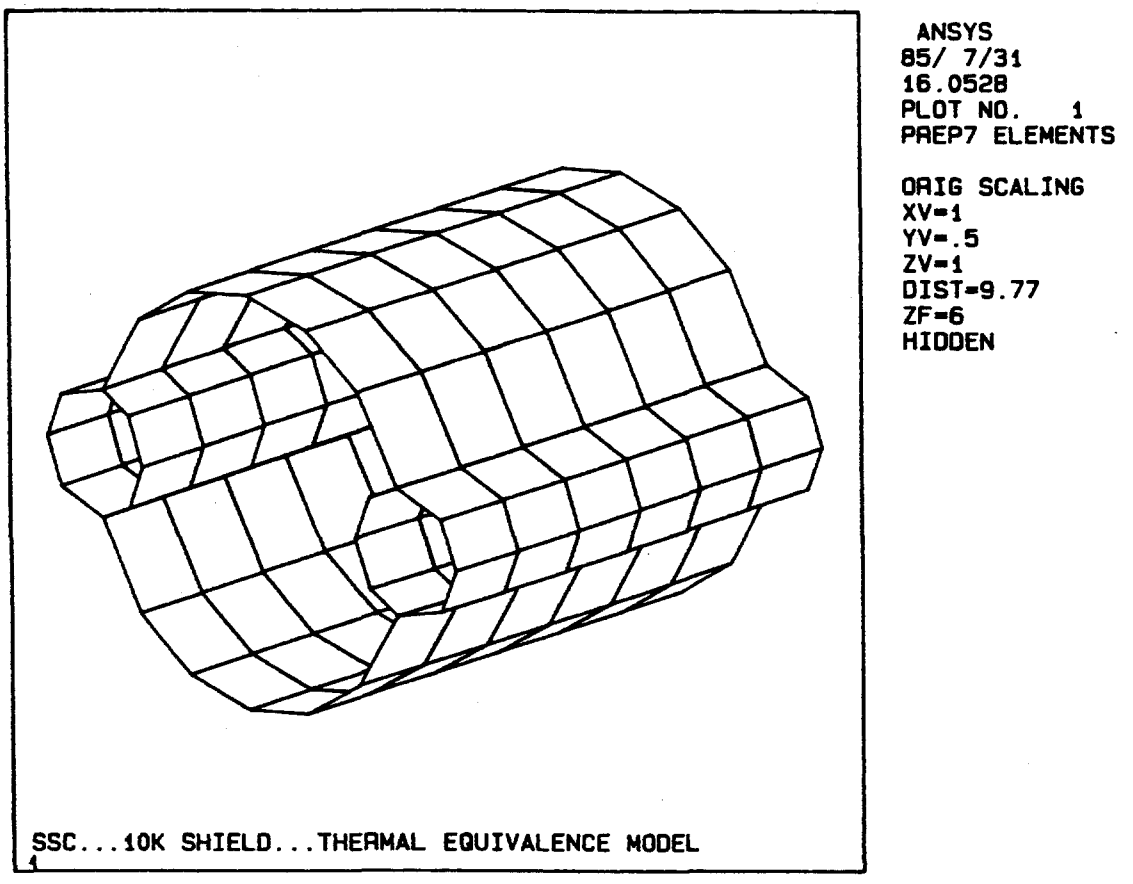

Fig. 3. Partial finite element mesh

In order to ensure that the model would mechanically track the actual shield assembly, it must first track it thermally. Both the thermal conductivity and specific heat of aluminum are very temperature dependent. Thermal conductivity varies by one order of magnitude over the required temperature range. Specific heat varies by three orders of magnitude over the same range. Clearly, the temperature dependence of these material properties would need to be included in the finite element simulation. Figure 4 shows a plot of the thermal conductivity and specific heat vs. temperature of 6061 aluminum, the alloy used in the simulation.[1,2]

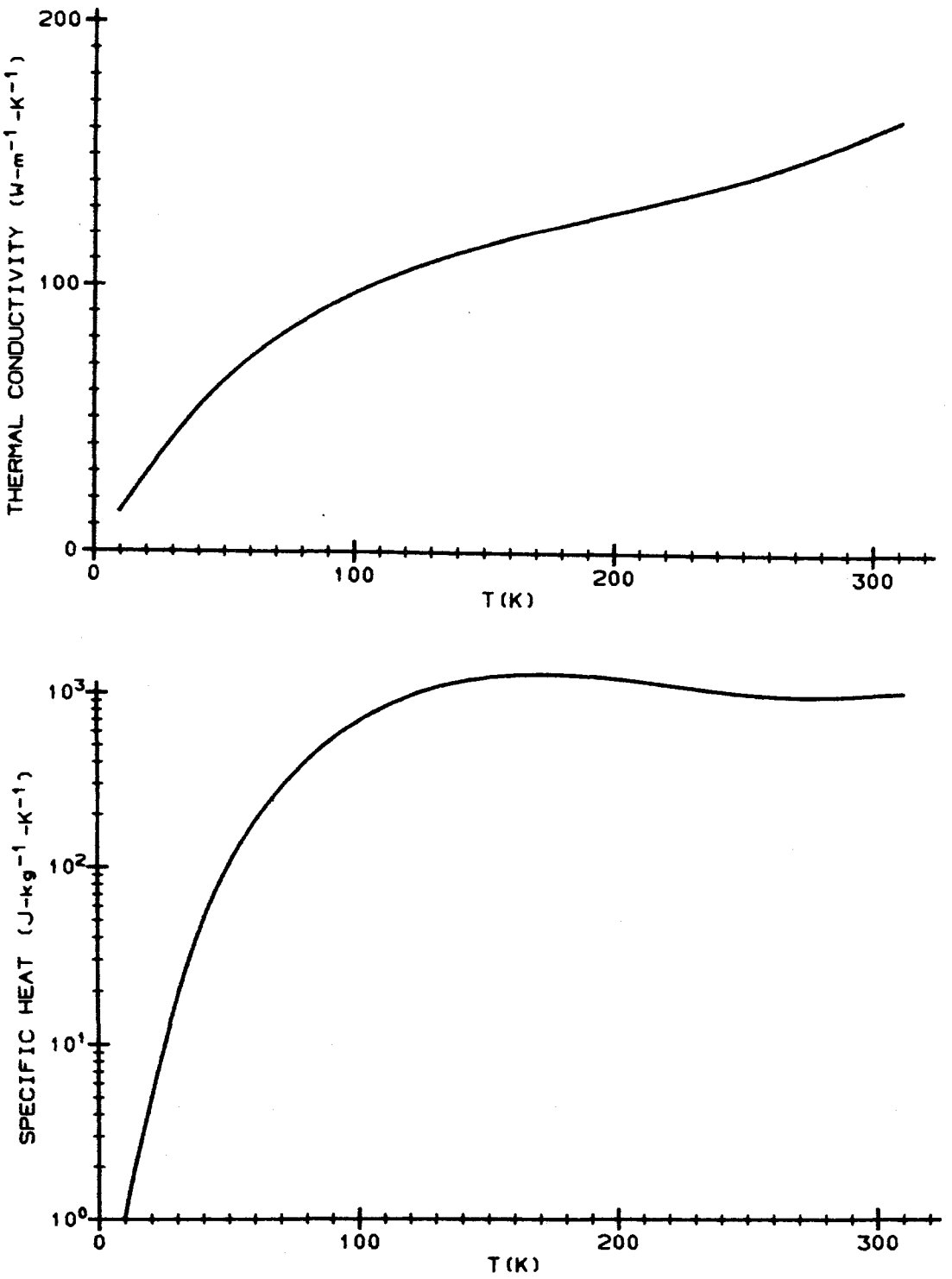

Fig. 4. Thermal conductivity and specific heat vs. temperature (6061 aluminum)

COMPARISON OF THE LABORATORY TEST AND FINITE ELEMENT MODELS

In order to generate the cold side temperature input for the finite element model, the laboratory test was performed first. Following instrumentation checkout, the shield assembly was insulated with fiberglass blankets to minimize heat input from the room. With the full length nitrogen spray nozzle inserted into one of the side tubes and connected at the outside end to a 100 L liquid nitrogen dewar, the liquid valve on the dewar was opened fully and allowed to run until the dewar was empty (approximately 40 minutes). Temperatures and displacements were recored for all 19 data acquisition channels at 5 second intervals for 10 minutes and 20 second intervals for the duration of the test.

Tempertures measured on the cold side of the laboratory model were next used as input for a reduced length version of the full finite element model. This was necessary in order to verify that the material properties selected for use in the simulation would give thermal results comparable to the physical model. The reduced length (0.61 m vs. 6.10 m for the full model) yields reduced computation time, but gives identical circumferential thermal response.

The temperatures specified at times equal to 0, 300, 600, 900, 1500, 1800, 2400 seconds were those measured in the lab. In order to look at the finite element model over a longer time period, temperatures at 3000, 4200, and 6000 seconds were set to 88 K. The validity of the thermal model may be gauged by looking at the calculated warm side temperatures and comparing them with those measured in the physical model. Figure 5 is a plot of both the measured and calculated cold and warm side temperatures. As is evident from this figure, the calculated warm side temperatures agree very well with the measured results up to about 1500

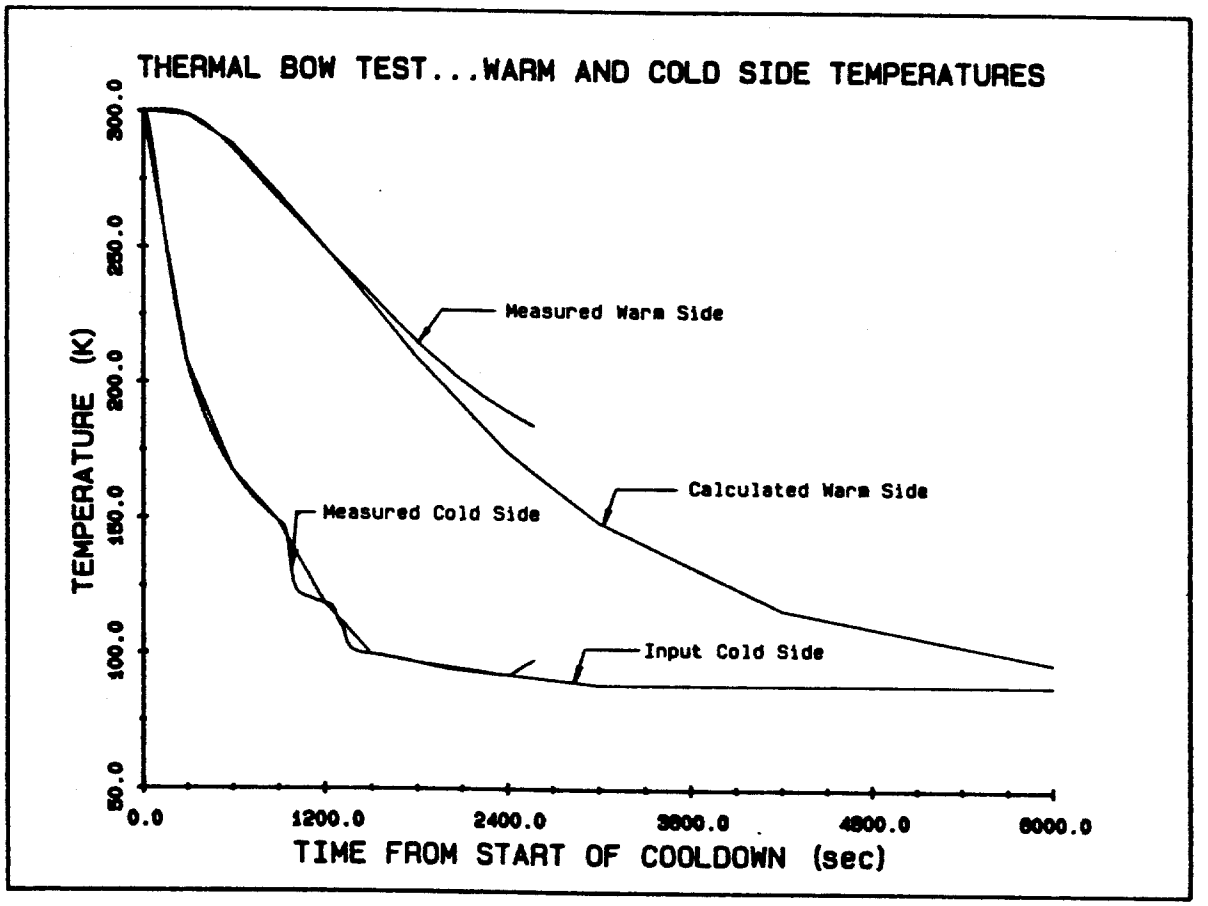

Fig. 5. Temperatures vs. time

seconds from the start of cooldown. Since the maximum deflections measured in the lab occured at about 600 seconds from the start of cooldown, the thermal comparison seemed adequate to continue with the stress/deflection calculations.

Once the thermal response of the model was verified, the same cold side temperatures were input to the full thermal model. This computer run generates the temperatures everywhere in the model at each time interval.

Finally, this temperature history was input to the stress/deflection part of the analysis. From this, the deflections, stresses, and support reactions were calculated. Figure 6 is a plot of the measured and calculated horizontal deflections at each of the measurement stations.

The reaction forces generated by shield bowing on the magnet suspension system is of great interest to magnet designers. Although good measurements of these loads were not made during the laboratory test, the difficulty of securing the assembly indicated that the forces were high. The finite element analysis verified that initial concerns about high forces were warranted, yielding maximum reaction forces of 1000 kg on the support nearest the center 500 kg on the outer support.

CONCLUSIONS

As stated in the introduction, the main goal of this effort was to predict the maximum distortions during cooldown. Figure 6 points out clearly that the finite element analogy has done a very nice job of that prediction. There are some discrepancies in the mid-support point deflections partially attributable to several factors. First, the finite element model makes the assumption that the supports are perfectly rigid in the horizontal and vertical directions. In fact there was some

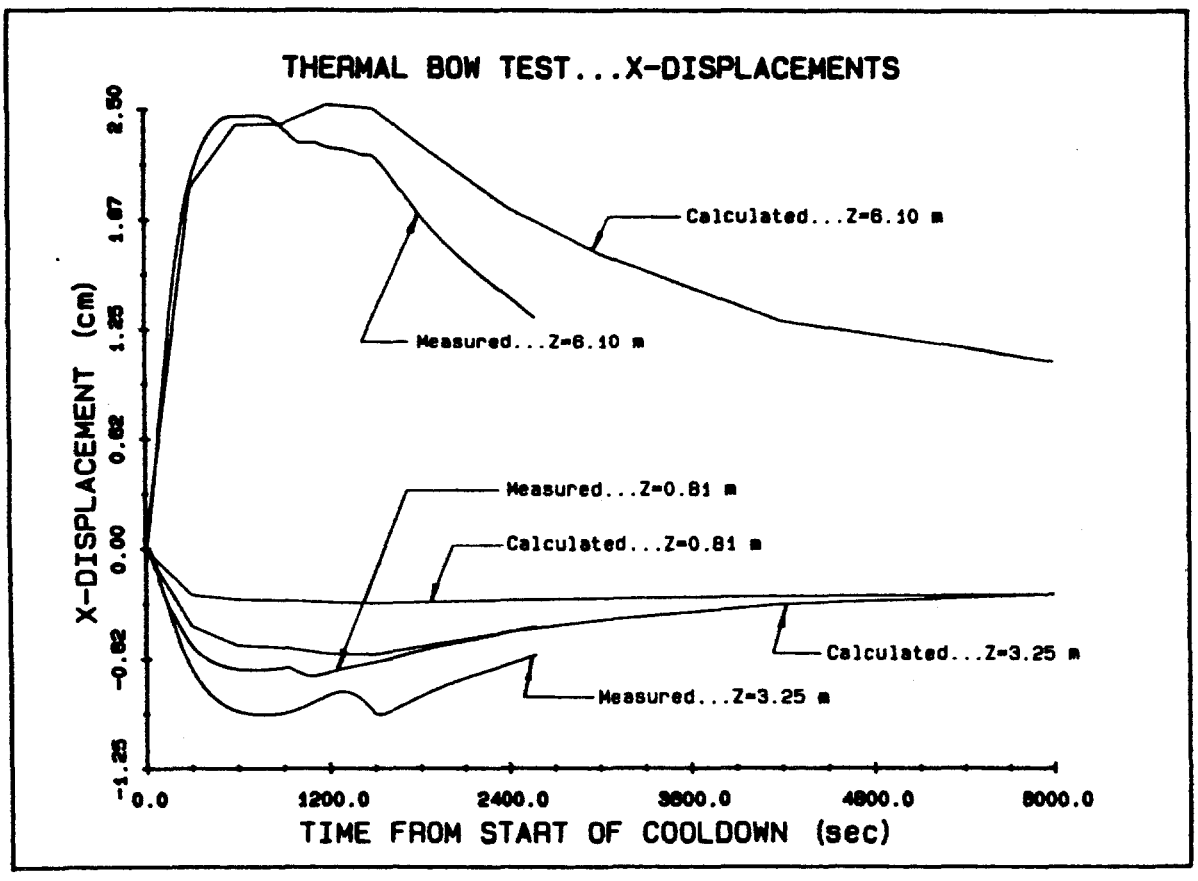

Fig. 6. Displacements vs. time

looseness in those assemblies. Second, the temperature on the cold side of the tube on the physical model was not uniform along its length. The temperature input to the finite element model on the other hand was uniform, and was in fact the average of the four cold side thermocouple readings. It is difficult to judge the impact of these differences in the models without additional testing.

In summary, it seems clear that simulation of shield distortions using a finite element model is a viable alternative to building and testing even a moderate number of prototypes. However, if the results are to be meaningful in the design process, a reasonable estimate of the cooldown rate which will actually be experienced in operation must be known.

One of the distinct advantages that the analytical approach has over the laboratory setup is in its ability to allow testing of a wide number of input conditions. For example, the maximum cooldown rate attained in the laboratory phase of this project was approximately 0.33 degrees per second. For the SSC, estimates for worst case conditions range as high as three times this figure. Without a much more sophisticated test setup, including an insulating vacuum vessel, cooldown rates of this magnitude would be difficult to attain. However, with a finite element model, variability of input conditions is almost unlimited.

ACKNOWLEDGMENTS

The authors would like to thank Mr. Mark Ruschman and Ms. Robin Larson for their assistance in the laboratory phase of this project and Mr. Roger Zink, Mr. Rick Dixon, and Mr. Jim Mulvey for their assistance in preparing this report.

The work as presented was performed at Fermi National Accelerator Laboratory which is operated by Universities Research Assn. Inc., under contract with the U. S. Department of Energy.

REFERENCES

1. H. I. McHenry, Structural alloys, in: "Materials at Low Temperatures", R. P. Reed and A. F. Clark, eds., American Society for Metals, Metals Park, OH (1983), p. 401.

2. "Handbook on Materials for Superconducting Machinery", Metals and Ceramics Information Center, Battelle Laboratories, Columbus, OH (1977).

3. "ANSYS Engineering Analysis System User's Manual," Swanson Analysis Systems, Inc., Houston, PA (1983).