Fermilab

TM-1211
0102.000
March 27, 1983

WHY SUPERFERRIC MAGNETS FOR A DESERTRON?

F. R. Huson

It has been proposed by R. R. Wilson and L. Lederman that it may be advantageous and cheaper to construct a large accelerator (>10TeV) with superferric magnets (~2.5 Tesla). This concept was considered further at the DPF 1982 summer workshop held at Snowmass, Colorado (Proceedings page 315). A rough layout of a facility was designed and a cost estimate made. This encouraged some of the participants to continue the design at Fermilab. This paper is an attempt to transmit our belief that a superferric magnet system of at least 3 Tesla is indeed the simplest and least expensive way to construct a large accelerator.

We take as a premise that a sufficiently large piece of land is available for the accelerator (see paper on Site and Tunnel), that is, one is not limited by the radius of the tunnel. For example, it is clear that CERN which will have a 4.5Km radius tunnel, should use the highest field magnets technically possible.

The word superferric has been interpreted to mean a super conducting magnet where the coils are used principally to drive the field in the steel. We also add the constraint of simplicity and keep the coil shaped in a rectangle with no more than a few turns.

We have found in evaluating the costs of the energy doubler magnets that about one half of their cost is due to the ends, that is, coil ends, cryostat ends with many vacuum and cryogenic connections, etc. Therefore we attempt to minimize the number of ends by making the magnets very long (>100m). This can be done for low field magnets (~ 3T) but is more difficult for higher field because of the stored energy (See paper on stored energy in a magnet).

There are at least two ways to construct a 3 Tesla superferric magnet. One way is to divide the rectangular current element into two different current regions, the top and bottom 1/3 is one current and the middle 2/3 is another current. At low field only the central current is used to produce a good field; at high field (3T) the overall current density is equal; intermediate values use different ratios. The second way is to crenelate the pole face, either transversely or longitudinally, to achieve good field at all values. The shape of the steel with the narrowest gap controls the low field, the parts with the largest gap control the high field and the shape of the steel in between determines the intermediate fields. These two designs with their field shapes are presented in the paper on magnet design. Figure 1 shows a cross section of each magnet. These magnets have a good field region of .6".

It is of interest that if the iron were not present in these designs the field would only be about 1 Tesla, thus 2 Tesla come from the iron. Therefore the errors related to coil placement

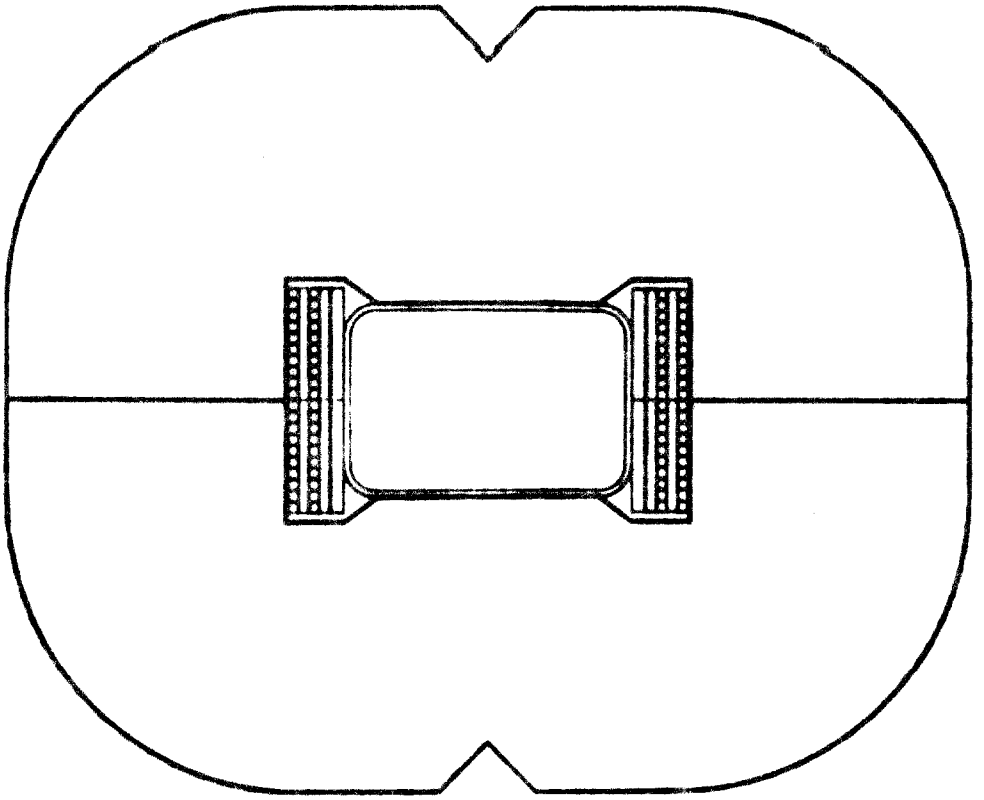

Figure 1 a.
Two current 3 Tesla magnet. One current is the upper eight turns and lower 8 turns, the other current is the middle 24 turns. At low field only the middle current is used, at full field there is uniform current density.

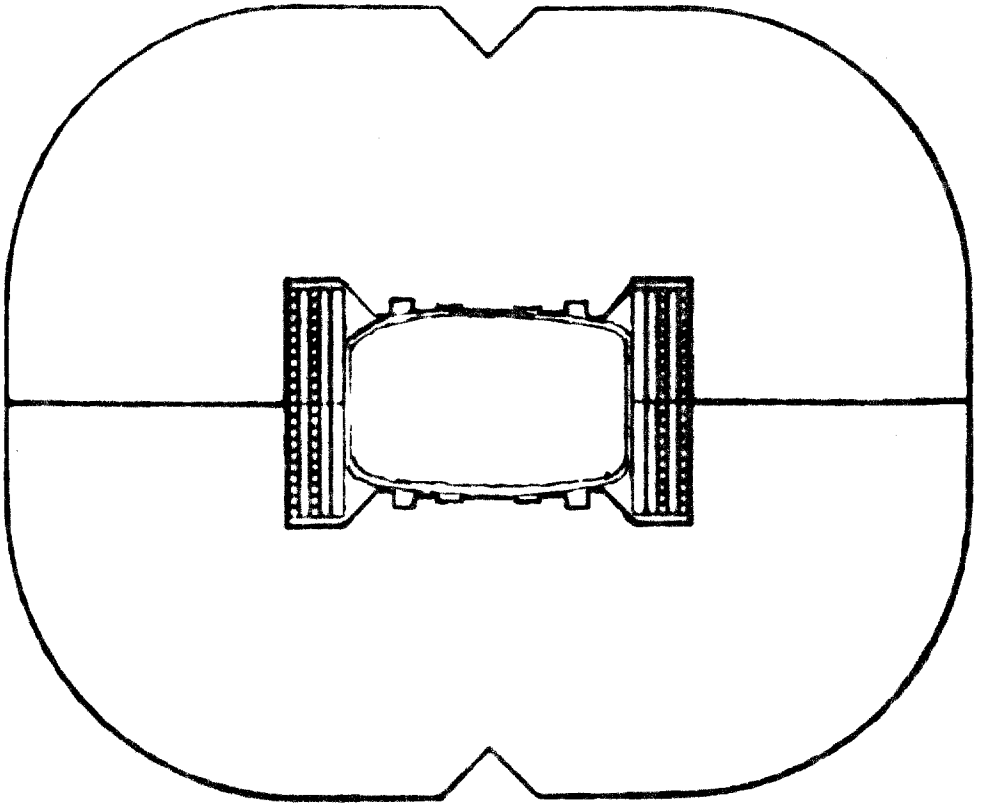

Figure 1 b.
Crenelated magnet. Uniform density is used.

are based on one third of the field and on a 2" bore whereas the errors due to steel are based on two thirds of the field and a 1" gap. We believe we can control errors on the steel laminations to a few tenths of a mil. By careful construction and selection of laminations random errors can be controlled to a few $x10^{-4}$.

Accelerator Costs

Magnets

Magnet costs can be approximated by three terms. One term is due to superconductor and coil costs.

$$\text{Pounds of Supercond} \sim \frac{N_i R}{J} \qquad J \sim \left(2 - \frac{T}{4.5}\frac{1}{1-B/20}\right)/B$$

A second term includes principally cryostat and labor costs (some from coils) and is proportional to the number of magnet ends (N_d+N_q). This term comes from experience with energy doubler magnets where 1/2 of the cost comes from the ends. The third term includes miscellaneous parts, labor, steel etc. and is proportional to R and B (or p).

$$\text{Cost}_{\text{magnets}} = \frac{30 N_i \times p}{\left(2 - \frac{T}{4.5}\frac{1}{1-B/20}\right)} + 20(N_d+N_q)\times 10^3 + 6\,p\times 10^6$$

Refrigeration

The refrigeration should be proportional to the surface area of the liquid helium temperature material and inversely proportional to the temperature. A good system should have the conductive load about equal to the radiative load. (This is not true for the doubler where the conductive load is very large). There is another term due to the synchrotron radiation.

$$\text{Cost}_{\text{Refr.}} = 2.5\,\frac{R d_c}{T}\times 10^6 + .29\,\frac{I\gamma^4}{R^2}\left(\frac{4.5^\circ}{T}\right)$$

Power Supplies, Controls, Utilities, Service Areas

Corrections, Detectors, Vacuum

Essentially all of these things can be put together and are proportional to the number of quads and less to the number of dipoles.

$$Cost_{Ut.} = 100\,(N_q + N_d/4) \times 10^3$$

Tunnel and Service Buildings

The right-of-way preparation (assumed average cut of 15 feet deep and 30 feet wide and fill of 3 feet deep and 300 feet wide to the outside) and separate 24 foot hardtop roadway is linear in R. The backhoe digging, tunnel and tunnel installation are proportional to the radius and area of tunnel. The maximum earth cover is about 15 feet. For construction of the service buildings and six 500 meter straight sections (for 15 TeV) there is a term proportional to $(N_q+N_d/4)p$.

$$Cost_T = 2R \times 10^6 + RA\,\frac{(20+d)}{30} \times 10^4 + 1.6p(N_q + N_d/4) \times 10^3$$

Miscellaneous and Installation

For the miscellaneous we take a term proportional to p, for the installation we take a term proportional to N_d+N_q.

$$Cost_{int.} = 7p \times 10^6 + 7(N_d+N_q) \times 10^3$$

Some Assumptions

1. Costs are normalized to energy doubler costs.

2. To keep beam size smaller than 1 mm for ε_0 = 1 mm•mr. I pick

$$\bar{\beta} = R/\gamma = 200 \text{ meters}.$$

3. For the estimate of the length of a magnet I limit the induced voltage to about 200 volts. To obtain this I assume the conductor carries 25K amps.

The variables used in the cost estimate are:

N - ampere turns

T - coil temperature in ^{0}K

p - momentum in TeV.

N_d - number of dipoles

N_q - number of quadrupoles

R - main accelerator radius in Km.

d_c - diameter of coldest part of magnet in inches

I - intensity in units of 10^{13}

γ - Relativistic parameter

A - Area of tunnel in feet^2.

d - Depth of ~~trenching~~ earth cover for tunnel (in feet).

Parameters

	2.5T	3.0T	4.4T	5.3T	10T
Momentum p	15 T	15	15	15	15
$R = (p/.3B)/.85$	23.5 Km	19.6	13.4	11.1	5.9
$\gamma = R/200m.$	117	98	67	55	30
Ni	50×10^3 Ampts.	75×10^3	360×10^3	520×10^3	900×10
I (units 10^{13})	100	83	57	47	25
$N_{dipoles}$	912	760	1024	1664	2592
$N_{quads.} = 8\gamma$	936	784	536	440	240
d_c = diameter of magnet.	4.5"	5"	6"	12"	12"
l ½ cell	157m	157	157	157	157
l magnet.	138m	138	70	35	12
Magnets/½ cell	1	1	2	4	12
N (for i = 25K amps).	2	3	15	21	36
L inductance mh $\sim \frac{N\phi}{i}$	~ 1.0 mh	~ 2.3	~ 9	~ 8	~ 8
W/magnet.	310Kj.	700	2500	2500	2500
Voltage $\sim L\frac{di}{dt} \sim Li$ in 1 sec.	25V	60	200	200	200
A = area of tunnel	15 ft^2	15	15	15	15
d = depth of ~~Earth~~ cover	15 ft'	15	15	15	15
T = temp. of magnet.	4.5°	4.5	4.5	4.5	1.8
Effective radius for 2 wires			1.15		1.4

Table of Costs (in millions)

(Main Accelerator, No EDIA or Contingency)
(No R&D).

Magnets	2.5T Superferric	3.0T Superferric	4.4T Energy Doubler	5.3T Danby	10 Tev
coils $30 N_i p/(2-\frac{T}{4.5}\frac{1}{(1-B/20)})$	26.3[1]	41.0[2]	225.6	365.9	3[illegible]
ends $20(N_d+N_q)\times 10^3$	37.0	30.9	31.2	42.1	[illegible]
Labor, steel $6\,p\times 10^6$	90.0	90.0	90.0	90.0	9[illegible]
	153.3	161.9	346.8	498.0	4[illegible]
Refrigeration					
Rad.+Cond. $2.5\,\frac{R d_c}{T}\times 10^6$	58.8[3]	54.4[4]	44.7	74.0	9[illegible]
Synch. $2.9\,\frac{I\gamma^4}{R^2}\left(\frac{4.5°}{T}\right)$	3.4	4.1	6.0	7.3	3[illegible]
	62.2	58.5	50.7	81.3	13[illegible]
Utilities, Corr, Controls, Service Areas, Vac etc					
Most. $100 N_q\times 10^3$	93.6	78.4	53.6	44.0	2[illegible]
Vac $25 N_d\times 10^3$	22.8	19.0	25.6	41.6	6[illegible]
	116.4	97.4	79.2	85.6	8[illegible]
Tunnel					
R&W, Rad. $2R\times 10^6$	47.0	39.2	26.8	22.2	11.
Tunnel $RA\,\frac{(20+d)}{30}\times 10^4$	61.7	51.4	35.2	29.1	15.
Ser./Sh.St. $1.6\,p\,(N_q+N_d/4)\times 10^3$	27.9	23.4	19.0	20.5	21.
	136.6	114.0	81.0	71.8	46.
Installation, Misc					
Misc. $7p\times 10^6$	105	105	105	105	105
Install $7(N_q+N_d/4)\times 10^3$	12.9	10.8	10.9	14.7	19
	117.9	115.8	115.9	119.7	124
Total Main Acc.	586.4[5]	548[6]	674	856	87[illegible]

Note: To estimate a 2.5 and 3.0T magnet without iron. The costs for 2.5T increase by 68.2[1] ~~for~~ coils, decrease by 6.6[3] for refr. giving a total of 648[5]. For 3.0T, coils increase by 76.5[2] and refr. decreases by 10.9[4] giving a total of 614.[6]

APERTURE DEPENDENCE OF COST

N_i would be multiplied by $(\frac{a}{2''})$, a in inches.

N_d would increase as $(\frac{a}{2''})^2$ within the constraints of an integral number of magnets per half cell.

The third term of magnet costs would increase as $(\frac{a}{2''})$

d_c would go as $(\frac{a}{2''})$

2 HOLE MAGNET FOR pp (See Figure 4)

Although we have not made detailed field calculations for a 2 in 1 magnet, it appears to be a straight forward extrapolation from the 3 Tesla superferric magnet. The additional costs for such a ring are calculated from the same accelerator model.

	Cost	
Magnets		
coils	41.0	
ends	15.5	
	56.5	
Refrig.		
6" diameter vs. 5"	10.9	
Synchrotron rad.	4.1	
	15.0	
Util. Corr. etc.		
Term Nq	78.4	
Tunnel		
Nq doubles	42.1	
Install., Misc.		
Nq doubles.	19.4	
	211.4	additional

FERMILAB
ENGINEERING NOTE

SECTION	PROJECT	SERIAL-CATEGORY	PAGE

SUBJECT	NAME	
	DATE	REVISION DATE

Figure 4.

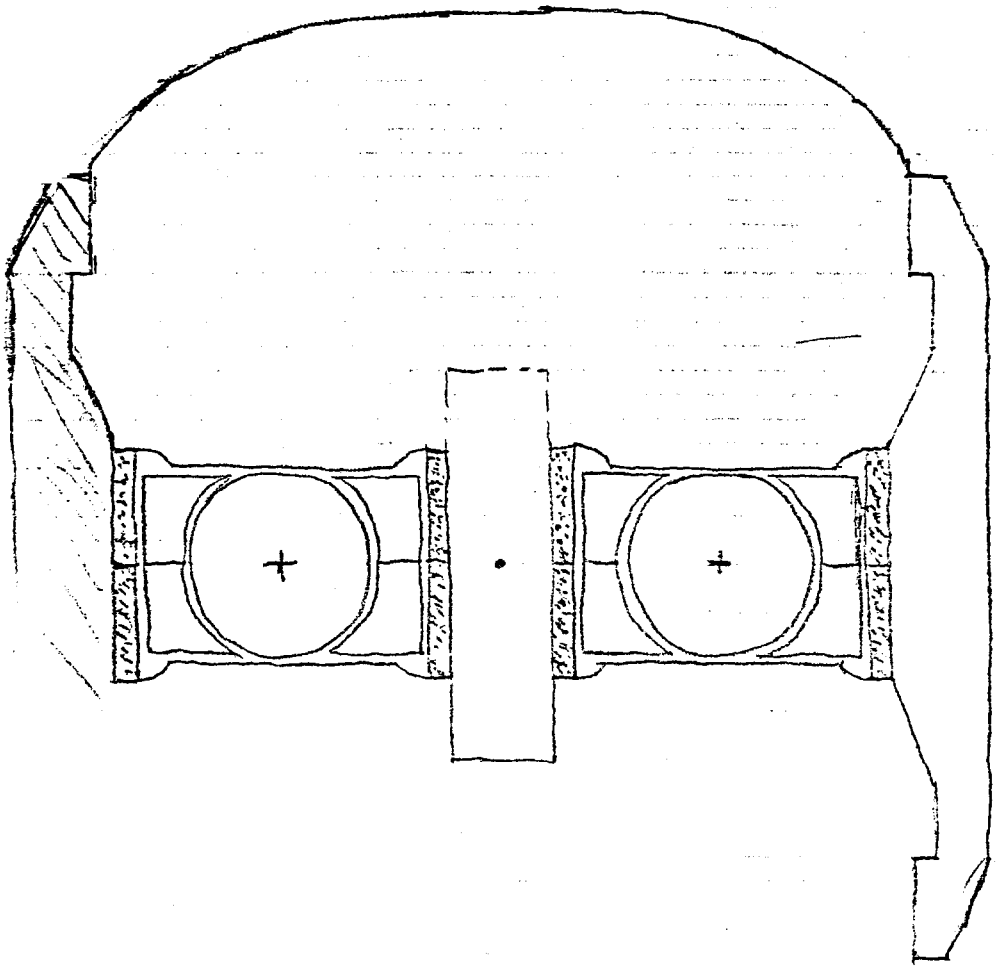

Additional Cost ~$211M

$\bar{p}p$ add. cost. ~$175M

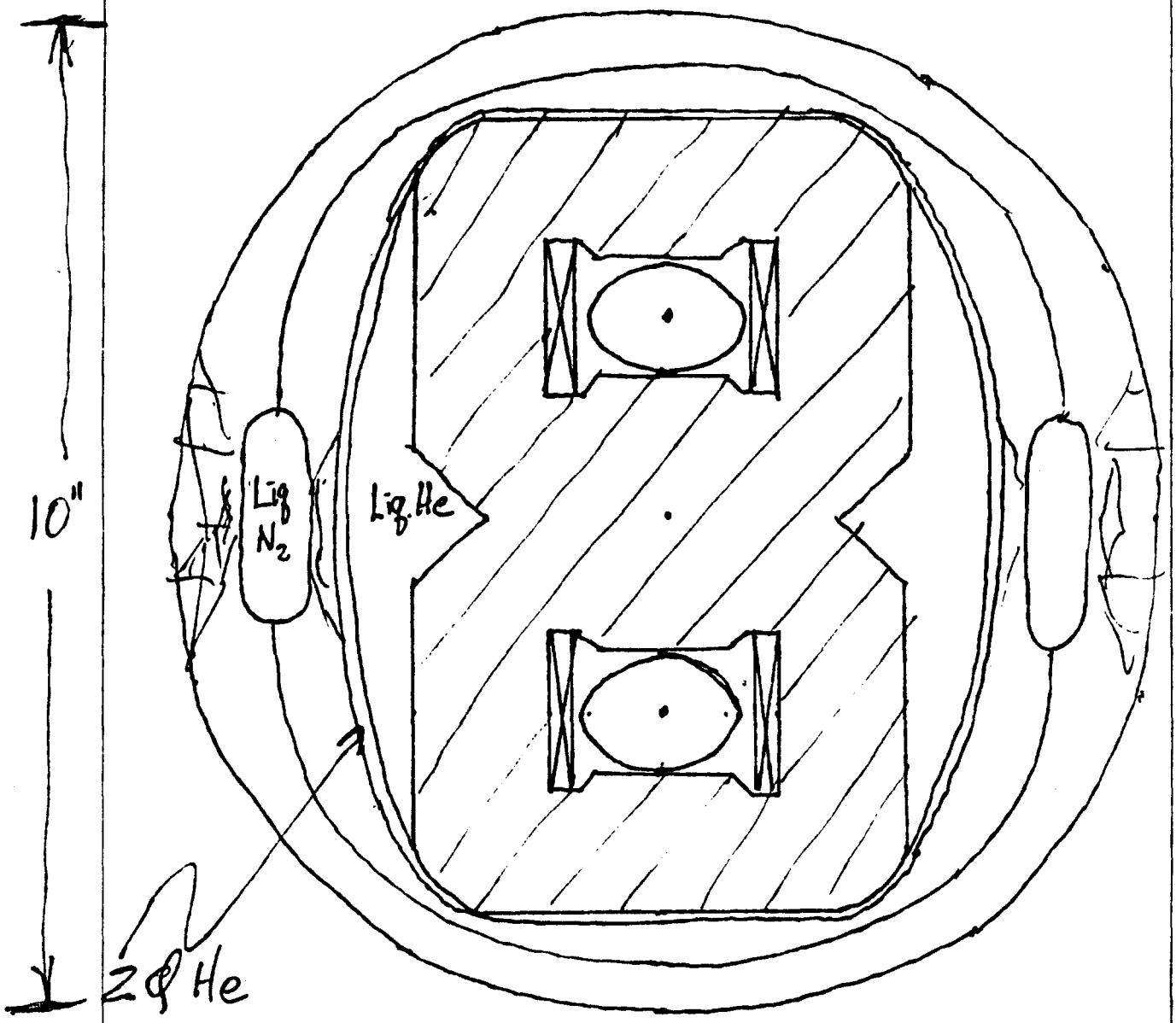
10"
Liq
N_2
Liq. He
2φ He

CONCLUSIONS

1. There are definitely two distinct kinds of magnets, those producing a field purely with coils and those where the field is dominated by iron. Coil type magnets can be used up to a field of about 10 Tesla. Iron type magnets have been designed for fields up to 3 Tesla. It must be explored how high a field can be achieved where the iron still has a significant effect.

2. The cost of the tunnel is a very significant part of the cost optimization. The description of the tunnel used here is presented in another paper. The overall tunnel cost including service buildings and accelerator straight sections averages about $275 per foot.

3. For most cases, particularly for coil type magnets, the coils are the single most expensive item and above 4T the total magnet is more than 1/2 the cost of the accelerator. The most significant cost dependence is on ampere-turns (Ni).

4. From the model desertron used in this paper the minimum cost accelerator using coil type magnets would be for a field between 3 and 4 Tesla. The least expensive accelerator would be using $\geq$ 3 Tesla superferric magnets.

5. Another advantage of superferric magnets of about 3 Tesla is their simplicity. Stored energy is less, forces are much smaller, etc.

6. A 2 in 1 superferric magnet for pp appears to be as cheap as a $\bar{p}p$ storage facility of the same momentum and would have $\geq$10 times the luminosity. The additional cost for the 2 in 1 is estimated

to be \$211M. A $\bar{p}$ source is $\sim$ \$100M, the larger aperature magnets required for $\bar{p}p$ would add $\sim$ \$50M, additional requirements on the injector (rapid cycling) could add $\sim$ \$25M bringing the additional cost to $\sim$ \$175M.