TM 1207-A
1640.000

Fermilab

A TUNNEL NITROGEN SPILL EXPERIMENT

A.I. Ageyev,* V.N. Alferov,* G.T. Mulholland
August 18, 1983

The Energy Saver Safety Analysis Report (SAR) found the tunnel oxygen deficiency considerations emphasized helium spills. These reports concluded the helium quickly warms and because of its low density, rises to the apex of the tunnel. The oxygen content below the apex and in all but the immediate vicinity of the helium spill is essentially unchanged and guarantees an undisturbed source of oxygen especially important to fallen personnel.

In contrast nitrogen spills warm slower than helium due to the ratio of the enthalpy changes per unit volume spilled $\frac{320{,}000\ j/l}{187{,}500\ j/l} = 1.71$, spread more uniformly across the tunnel cross-section when warmed because of the much smaller density difference with air, and generally provides a greater hazard than helium spills as a result. In particular there was concern that personnel that might fall to the floor for oxygen deficiency or other reasons might find less, and not more, oxygen with dire consequences.

The SAR concluded tunnel nitrogen spills were under investigated and led to this work.

EXPERIMENTAL EQUIPMENT

The Proto-Main (see fig.1), a 64 meter long proto-type of the main ring tunnel, was chosen as the experiment site because it offered ready access, an above ground location, controlled ventillation, and a connecting laboratory; Lab-2.

Nitrogen spills were simulated by the release of one or two 100ℓ dewars in 10 to 12 minute periods, i.e. at a rate of approximately 10 or 20 ℓ/minute. Oxygen detectors and thermocouples were placed at nine tunnel cross-sections six meters apart, and 3 elevations; 10 cm., 1.5m, and 2.1m, in each section. The doors at the ends of the proto-main tunnel were used to enhance (opened), or impede (closed) background air flow. Artificial (200 w fan) and natural (wind) forced flow were used to further enhance the air flow.

*Institute for High Energy Physics, Serpukhov, USSR

Oxygen content was measured with the saver devices, catalyst research, part #470644, provided by Rich Parry. Concern for the oxygen monitor performance in the immediate vicinity of the spills led to an investigation of their temperature sensitivity. Figure 2 is the time response of the oxygen monitors to a step temperature change from 25° to -17°C as provided by a household refrigerator.

The oxygen monitor response curve A is typical of most of a sample of twenty, curve B is a selected unit at the 10-20% yield level, and curve C is both selected and improved. The difference between A and B is attributable to sensor to static temperature compensating thermistor mis-match. The difference between B and C represents the adjustments made to the cover of the preamplifier case to effect an apparent dynamic temperature tracking of sensor and thermistor. The claimed accuracy of the selected and improved version is $\pm$ 0.5% O_2.

Oxygen monitor amplifiers were used as thermocouple preamplifiers to provide convenient signal levels for the chart recorders.

RESULTS-STILL AIR SPILL

The proto-main doors are closed to simulate little or no background air flow, and the simultaneous spill of two 100ℓ dewars begins at time t_0 and ends at t_2 and t_3. The oxygen content at 9 meters from the point of the spill is lowest near the floor and falls below the levels required to sustain life, see the time development of figure 3. Notice that the temperature near floor level falls below 0°C. Direct observation of the spill concludes very cold gaseous nitrogen spreads along the floor to the 36 meter point in two minutes. Opening the doors and turning on the 200 watt fan clears the tunnel in ten minutes.

The spatial development of the same spill at t_0 plus 11 minutes is illustrated in figure 4 A and B. Note that the fully warmed gas at large distances from the point of the spill has very nearly the same percent oxygen independent of elevation. At 57 meters (39 meters from the spill) the oxygen content is lethally low (11-13%) at all levels.

RESULTS-MOVING AIR SPILL

A wind of 0.3 M/sec. was created and the experiment repeated. The spill quantity and rate were duplicated so that all differences can be directly attributed to the air flow. The illustration of figure 5 clearly demonstrates a anticipated skew effect in the percent oxygen spatial distribution. The skew effect of the temperature distribution is far less evident, suggesting the air flow moves the warmer, lighter gas more easily. Note, in particular, the nitrogen successfully flows upstream, against the wind for tens of meters.

It should be noted that the comparison of figures 4 and 5 allow drawing the conclusion that the background air flow provided can improve the oxygen content both upstream and downstream of the spill by as many as 4 percentage points.

CONCLUSION

Liter for liter nitrogen tunnel spills are considerably more hazardous than helium spills. Nitrogen tunnel spill considerations should be made to and beyond the level for helium.

Consideration for fallen personnel, essentially absent for helium, is a serious problem for nitrogen. Fallen personnel must be removed from the vicinity of a nitrogen spill quickly and by properly trained, respirator equipped rescuers.

The location of oxygen monitors in the tunnel should be carefully reviewed for their appropriateness to these considerations.

A forced air flow of modest proportions significantly improves the situation in a straight tunnel. It should be clear circular tunnels require exhaust fans after a period of time.

ACKNOWLEDGEMENTS

The authors thank Rich Parry for his helpful discussion, technical assistance, and the loan of the equipment to allow the experiment. The authors thank Al McInturff and the members of Lab 2 for their technical assistance.

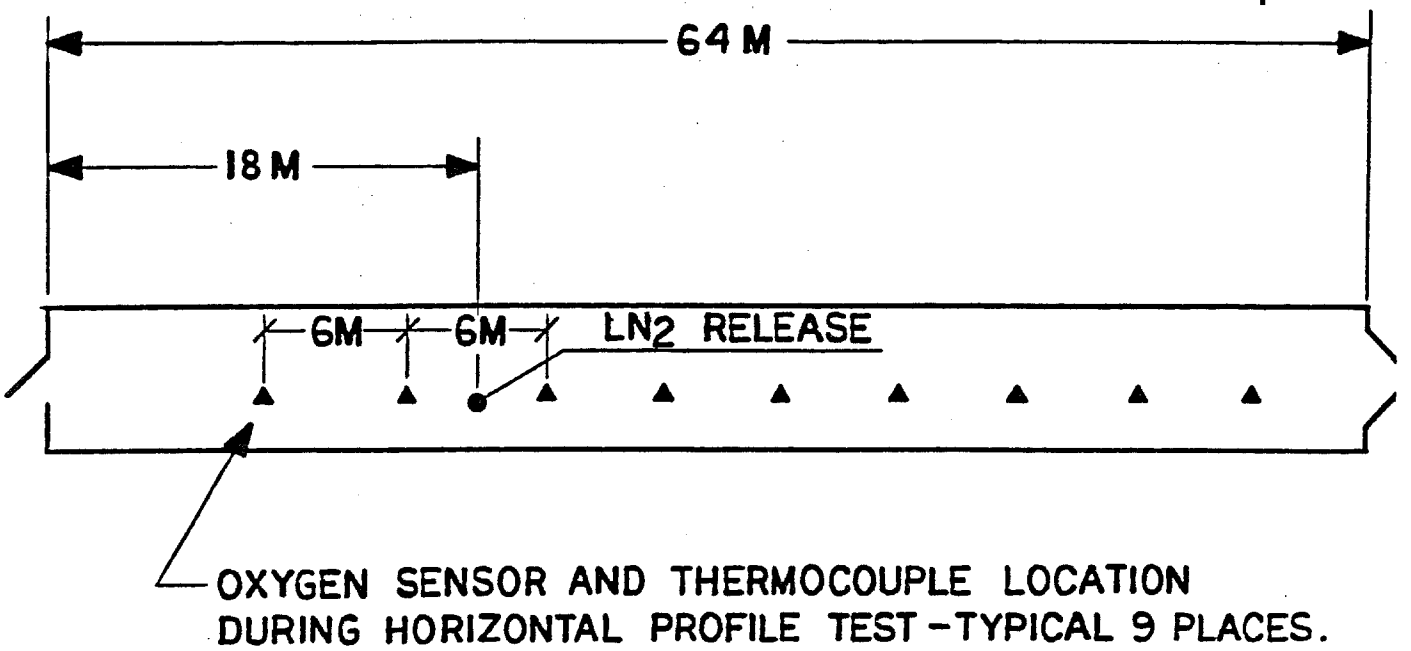

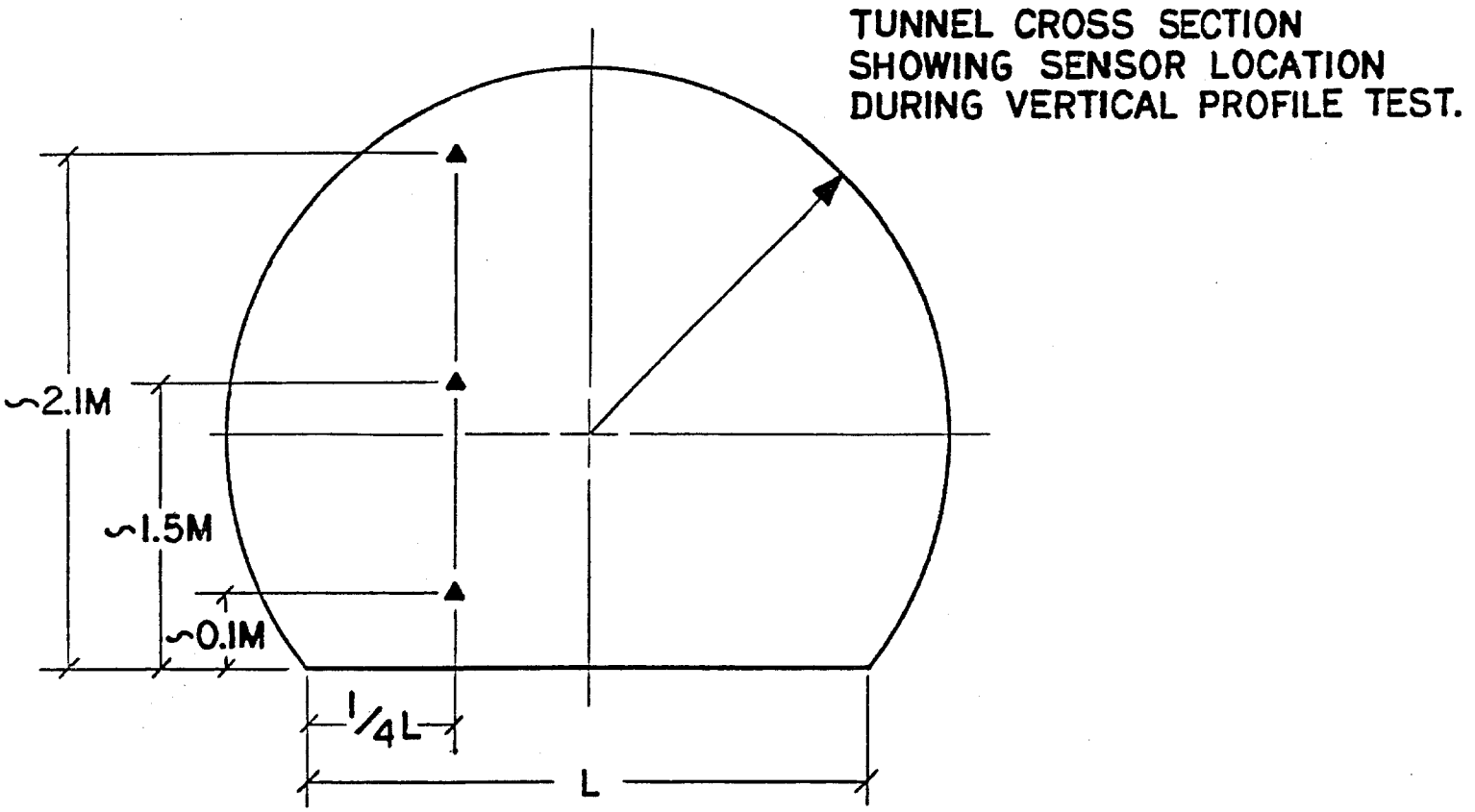

THE TUNNEL

FIG. 1

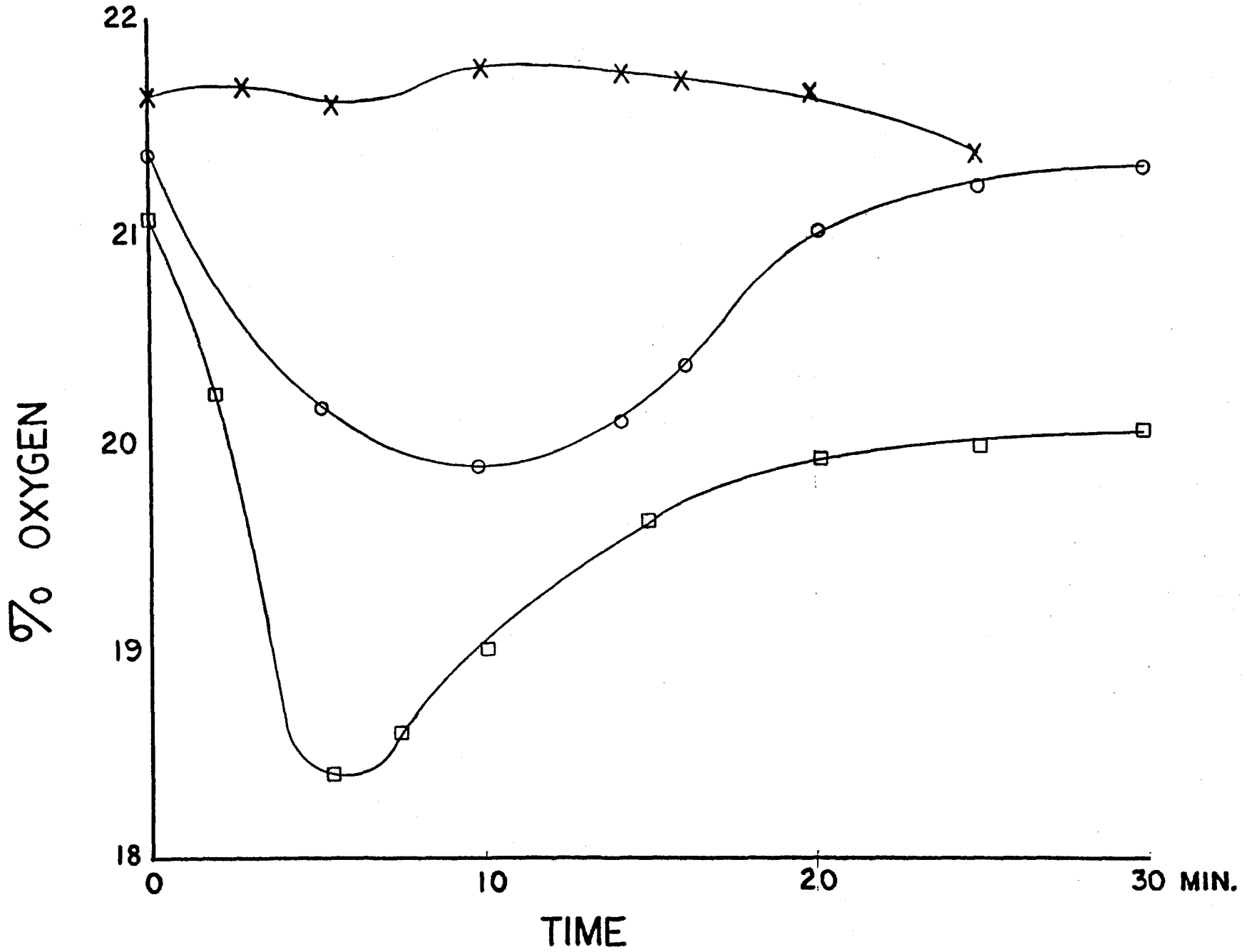

FIG. 2

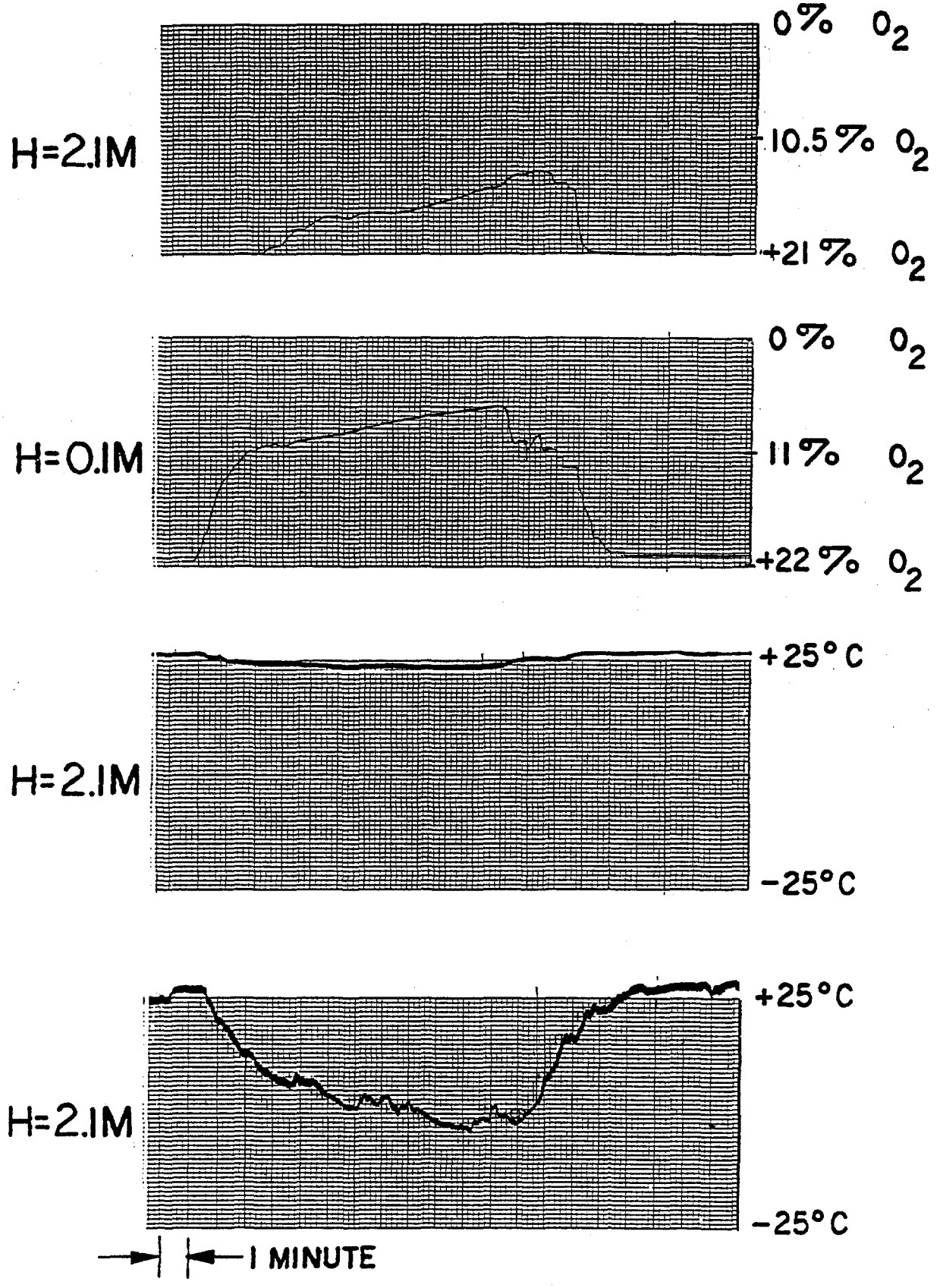
H=2.1M
0% O_2
10.5% O_2
+21% O_2
H=0.1M
0% O_2
11% O_2
+22% O_2
H=2.1M
+25°C
-25°C
H=2.1M
+25°C
-25°C
1 MINUTE
(20 L/M
200L TOTAL)
TIME
(9M TO RELEASE PT.)

FIG. 3

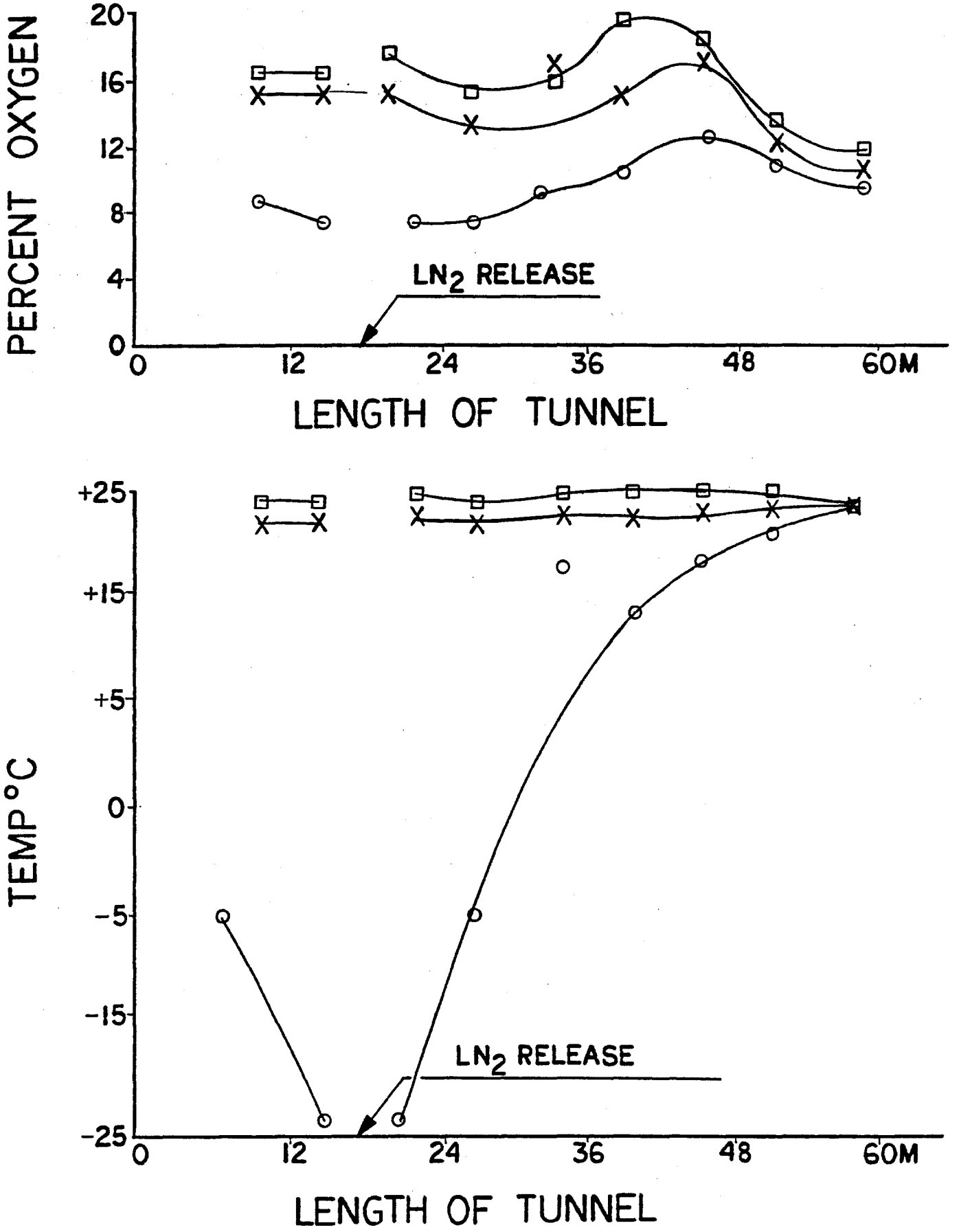
PERCENT OXYGEN
20
16
12
8
4
0
LN2 RELEASE
0
12
24
36
48
60M
LENGTH OF TUNNEL
TEMP °C
+25
+15
+5
0
-5
-15
-25
LN2 RELEASE
0
12
24
36
48
60M
LENGTH OF TUNNEL

FIG. 4

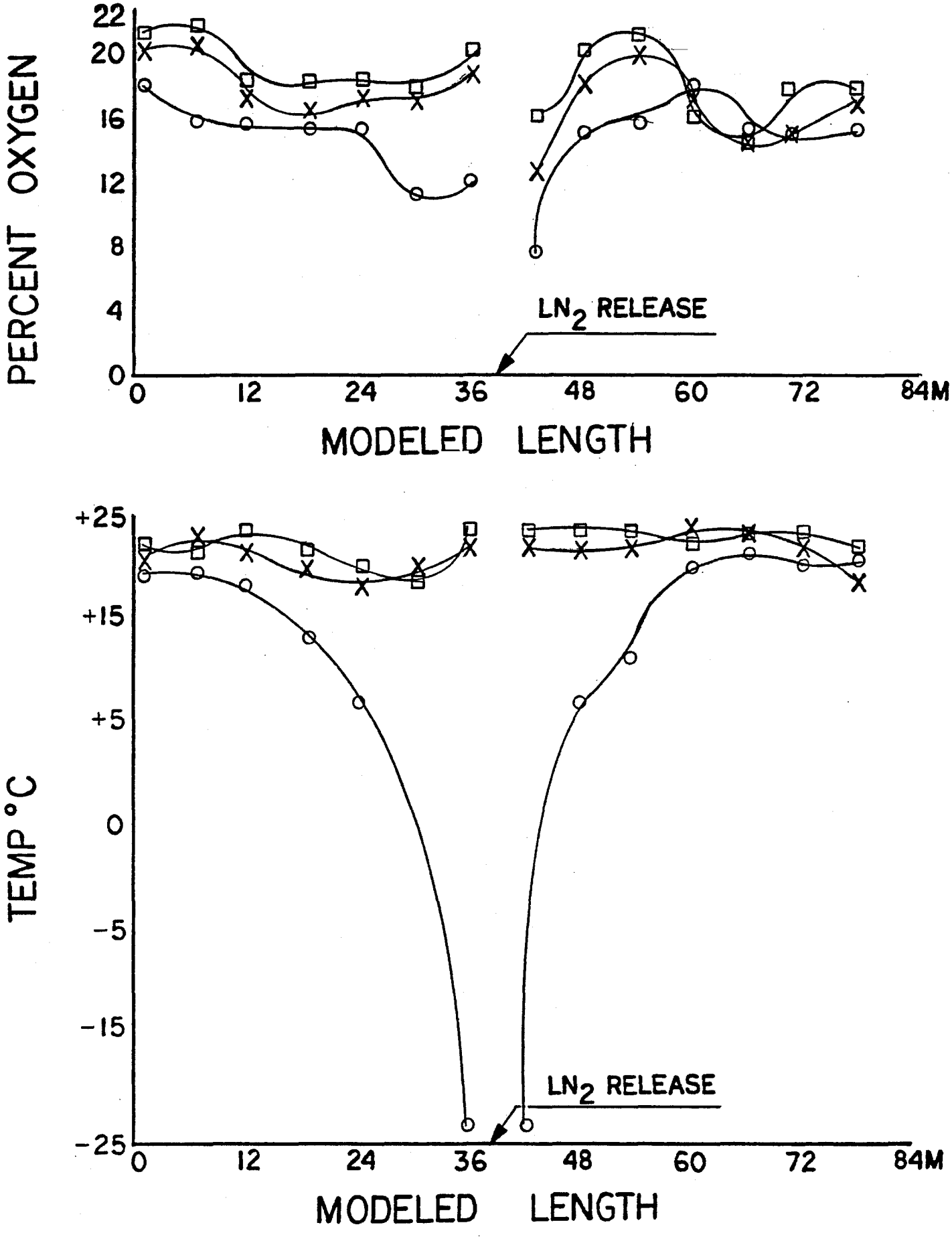
PERCENT OXYGEN
22
20
16
12
8
4
0
LN2 RELEASE
0
12
24
36
48
60
72
84M
MODELED LENGTH
TEMP °C
+25
+15
+5
0
-5
-15
-25
LN2 RELEASE
0
12
24
36
48
60
72
84M
MODELED LENGTH

FIG. 5