Fermilab

TM-1129
2562.000
7552.623

AMPLIFIER-DISCRIMINATOR FOR E-623 DRIFT CHAMBERS

Dan Green and Sten Hansen

August 1982

I. INTRODUCTION

The Mulit-Particle Spectrometer (M.P.S.) in the Meson Area at Fermilab was originally outfitted with spark chambers as the downstream large area particle detectors. This equipment was replaced in the spring of 1982 with drift chambers. Drift chambers are used because compared to spark chambers, they have a short dead time, good spatial resolution, small number of electronics channels and are relatively easy to build. This note reports on the amplifier / discriminator designed and built for this sytem.

It was the original intention of the M.P.S. Group to duplicate, as nearly as possible, an existing apparatus. The model chosen was the E-537 drift chamber system which has operated successfully at the high intensity pion lab. From discussions with people familiar with this installation, it was learned that improvements could be made in two areas: cross talk between signal wires needed to be reduced, and the Le-croy MUL100 amplifiers used by E-537 were unreliable. Given this information before the M.P.S. chamber design was fixed, it was possible to build in remedies for these problems.

II. IMPROVEMENTS IN THE CHAMBER

The cross talk is reduced in the M.P.S. chambers by using three techniques. Wires in the cathode planes are decoupled to the ground at both ends, providing a quieter high voltage reference. (This was implemented by E-537 with some difficulty after their chambers were completed). A ground plane is used on the signal planes so that wire signals are running over the ground as soon as possible after coming off the wire. A balun

transformer for each wire is installed inside the chamber so wire signals exit the chamber and enter the amplifier as balanced differential pairs. Running differentially gives increased immunity to stray pick-up.

III. AMPLIFIER IMPROVEMENTS

The Lecroy MUL100 has three drawbacks: high cost ($19 per wire), high threshold (∿250 μV input voltage), and early models showed low reliability. For these reasons, a different amplifier was used. Most of the amplifier designs in the literature have good performance but are costly becasue they use either a high speed comparator (e.g. AM 685) or a tunnel diode to improve time response. Typical per channel costs of these designs exceeds $15. We use our own version of these amplifiers, using low cost components. The resulting design has a cost of about $9 per wire.

III. A. AMPLIFIER DESCRIPTION

Fig. 1A. is a schematic diagram of the amplifier. The signal wire is terminated at both ends with a 400 Ω impedance which gives a minimum width wire pulse.[3] The balun at the wire transforms from 400 Ω unbalanced to 100 Ω balanced to match the impedance of the cable going into the amplifier. The signals leave the active volume of the chamber in sets of 16 signal pairs with 18 separating grounds on a 50 conductor ribbon cable leading to the amplifier edge connector. The signal is received in a 100 Ω to 400 Ω transformer and fed into a 733 video amplifier with its gain set to 100. The output of the 733 is A.C. coupled into 2 sections of an ECL 10216 line receiver (a 10116 selected for speed) configured as an amplifier with a gain of approximately 10 per stage, giving a total gain is of order 100. The feedback resistor is used for D.C. stabilization. The gain of the amplifier is open loop, since the output impedance of the 733 is much less than the value of the feedback resistor. A remotely adjusted threshold puts the ECL output at one extreme of its range so the amplifier response is unpolar. With the values shown

in Fig. 1A, the threshold voltage set to input current threshold ratio is approximately 10V/μA. The third stage of the 10216 is set up as a schmidt trigger in order to improve time response.

The final stage uses a section of a 10216 configured as a voltage controlled monostable multi-vibrator. The output feeds back positively through a capacitor to latch the gate in the "on" state. A transistor current sink is used to drain the capacitor at a rate specified by the voltage at the base of the transistor. The output width can be varied from 40 to 400 nsec with control voltages from -1.5 to -3.5 volts. The outputs of this stage are used to drive 100 Ω balanced lines. To allow for fast logic decisions, signals from each set of four contiguous wires are routed to an "or" circuit. The ouputs of these circuits, four balanced ECL level pairs for each sixteen channel amplifier card, are available on a separate ouput connector.

III. B. AMPLIFIER PERFORMANCE

The amplifier performance was quite satisfactory as judged by sensitivity and uniformity of time response. Fig. 2 shows a plot of the change in response time as a function of input signal magnitude. For this test, the threshold voltage was set at 7 volts. This is the setting used at the M.P.S. during running. The difference in time delay from 2x to 20x threshold is measured to be 3nsec.

On the test bench, single cards operated with a minimum threshold of 4 volts, which corresponds to a wire current of 0.4μA. Such a current generates 140μV across the input terminals of the amplifier, compared with the 250μV threshold of the MUL100. The typical wire current for the counter at its operating voltage is 5μA.

IV. OPERATIONAL RESULTS

Ninety-two sixteen channel cards are used to outfit 1472 drift wires in the M.P.S. system. The signal wires are spaced

on 3/4" centres, while the field shaping wires are placed midway between the signal wires. The cathode planes are spaced 3/8" behind and 3/8" in front of each signal plane. (Fig. 3). This arrangement produces a square of cathode potential (typically -2400V) 3/4" on a side with the signal wire at its centre.

Fig. 4A shows a plateau curve taken at the M.P.S. in a low flux of parasitic muons. The chamber was filled with a 50%/50% argon-ethane gas mixture. The curve shows a broad plateau with good efficiency. Fig. 4B can be used as an indicator for gauging cross talk. On the plateau, the multiplicity was independent of voltage and agreed with the value expected for the beam rate since the live time of the time digitizers allows approximately a 10% probability of 2 wires being hit within 1 gate period.

By using input transformers that contain a small amount of magnetic material, the energy that can be transmitted into the amplifier is limited. This enables the inputs to survive a spark discharge on the signal wire. In five months of set up, testing and running, there have been no amplifier failures. From test data and operation in the field, the chamber layout and amplifier design have proven to be a reliable, low cost, and good performance system.

REFERENCES

1) M. ATAC and J. Urish FERMILAB
Test Results on some Amplifier-Discriminator Circuits
FERMILAB TM-716 2562-000

2) H. Verweit CERN
Electronics for Drift Chambers
Paper presented to 14th Scintillation and semiconductor counter symposium
Dec. 1974 Washington, D.C.

3) H. Hoffnung. Ohio State
Effects of end Terminations on Drift Chamber Wire Signals
E. 613 Internal Memo

FIG. 1A

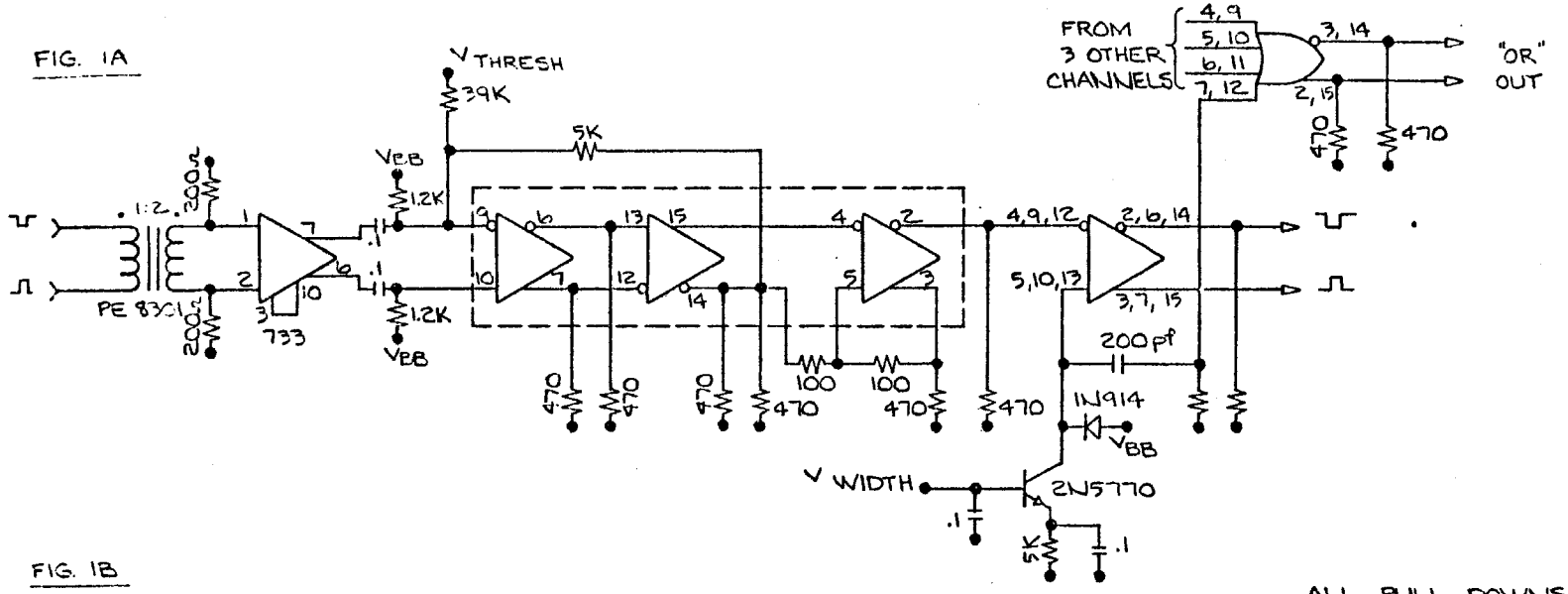

ALL PULL DOWNS TO
-5.2 UNLESS NOTED

FIG. 1B

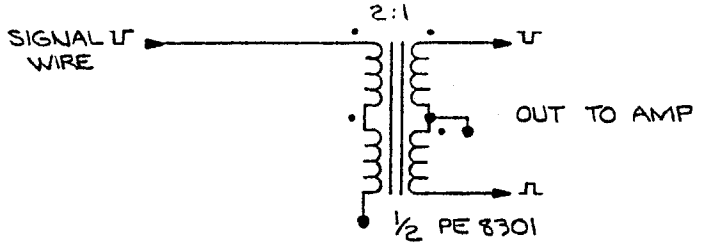

TRANSFORMER CONNECTION
INSIDE CHAMBER

ITEM NO.	PART NO.	DESCRIPTION
		PARTS LIST

UNLESS OTHERWISE SPECIFIED			ORIGINATOR	
FRACTIONS	DECIMALS	ANGLES	DRAWN	
±	±	±	CHECKED	
1. BREAK ALL SHARP EDGES 1/64 MAX.			APPROVED	
2. DO NOT SCALE DWG.			USED ON	
3. DIMENSIONING IN ACCORD WITH ANSI Y14.5 STD's.			MATERIAL-	
√ MAX. ALL MACHINED SURFACES				

FIG. 2

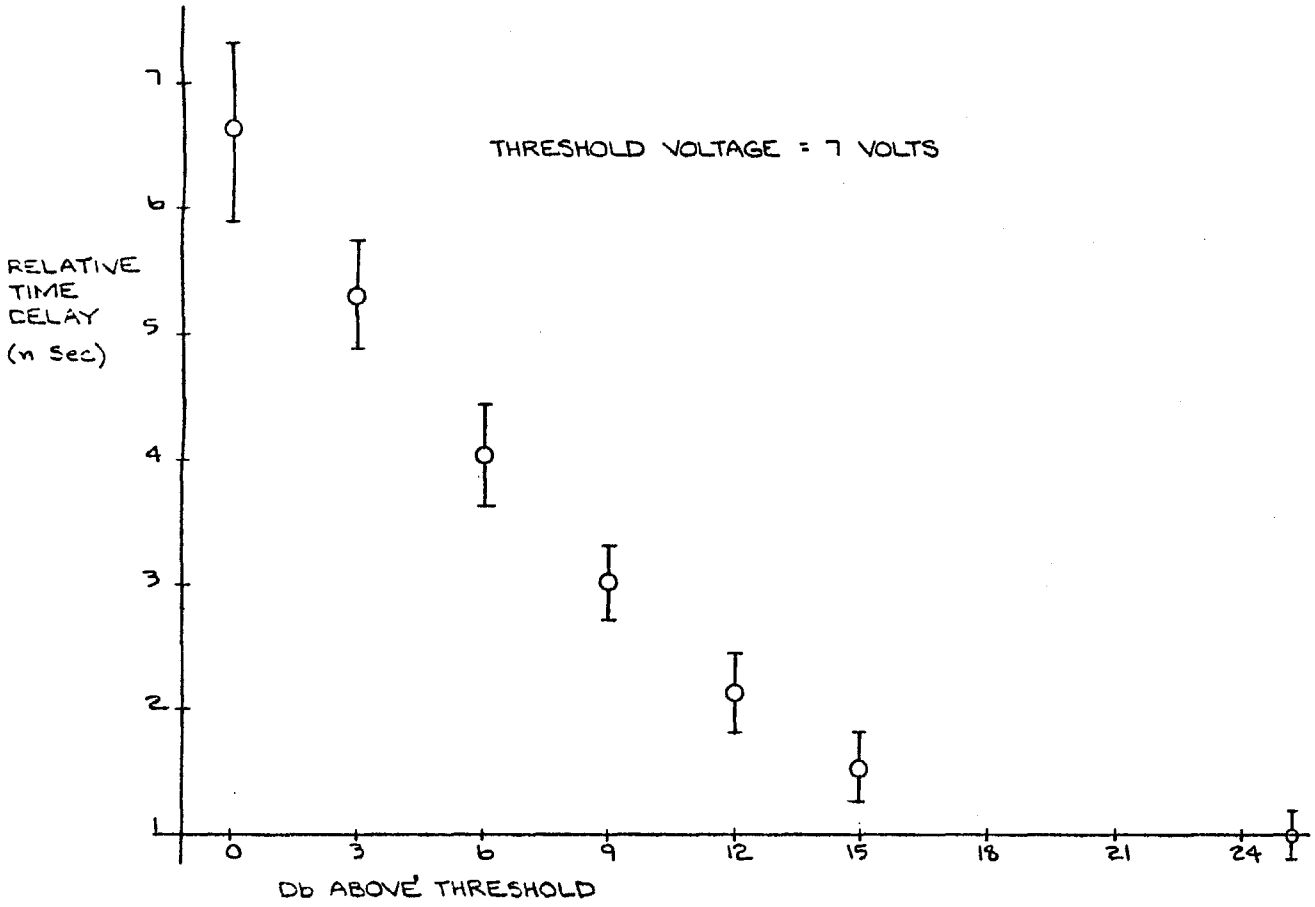

ITEM NO.	PART NO.	DESCRIPTION C
		PARTS LIST

UNLESS OTHERWISE SPECIFIED			ORIGINATOR	
FRACTIONS	DECIMALS	ANGLES	DRAWN	
±	±	±	CHECKED	
1. BREAK ALL SHARP EDGES 1/64 MAX.			APPROVED	
2. DO NOT SCALE DWG.			USED ON	
3. DIMENSIONING IN ACCORD WITH ANSI Y14.5 STD's.			MATERIAL-	
√ MAX. ALL MACHINED SURFACES				

FERMI NATIONAL ACCELERATO
ENERGY RESEARCH AND DEVELOPME

SCALE	FILMED	DRAWING NUMBER

REV.	DESCRIPTION	DRAWN	DATE
		APPD.	DATE

FIG. 3

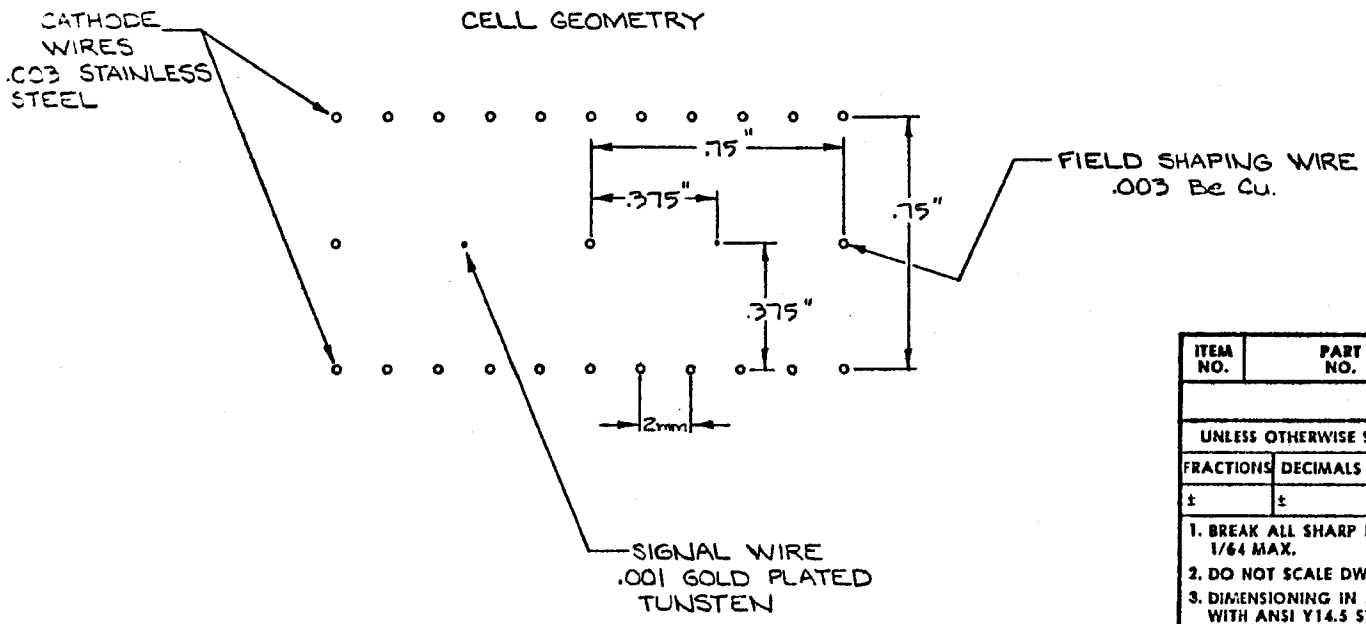

ITEM NO.	PART NO.	DESCRIPTION OR SIZE	QTY. REQ.

PARTS LIST

UNLESS OTHERWISE SPECIFIED			ORIGINATOR		
FRACTIONS	DECIMALS	ANGLES	DRAWN		
±	±	±	CHECKED		
			APPROVED		

1. BREAK ALL SHARP EDGES 1/64 MAX.
2. DO NOT SCALE DWG.
3. DIMENSIONING IN ACCORD WITH ANSI Y14.5 STD's.

√ MAX. ALL MACHINED SURFACES

USED ON

MATERIAL-

FERMI NATIONAL ACCELERATOR LABORATORY
ENERGY RESEARCH AND DEVELOPMENT ADMINISTRATION

SCALE	FILMED	DRAWING NUMBER	REV.

FIG 4A

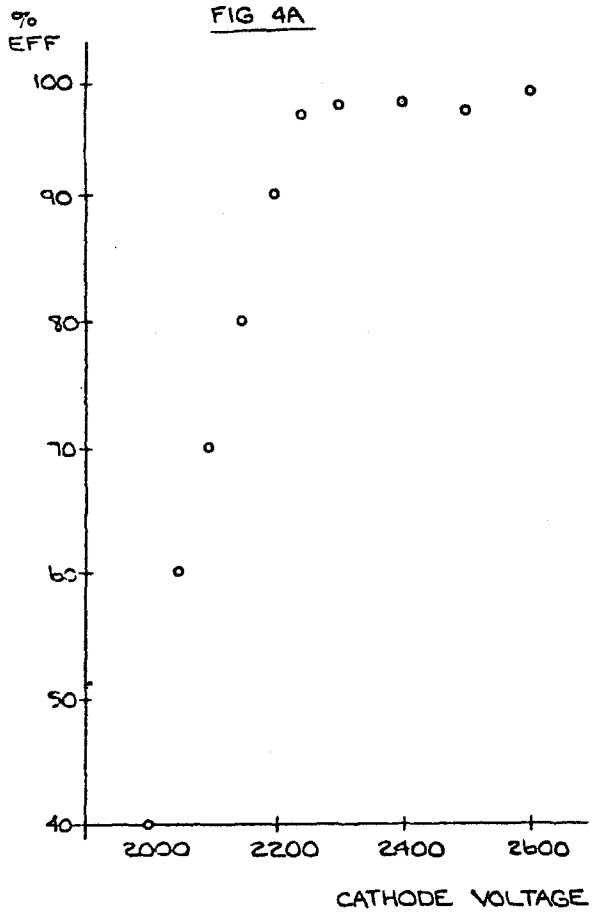

FIG 4B

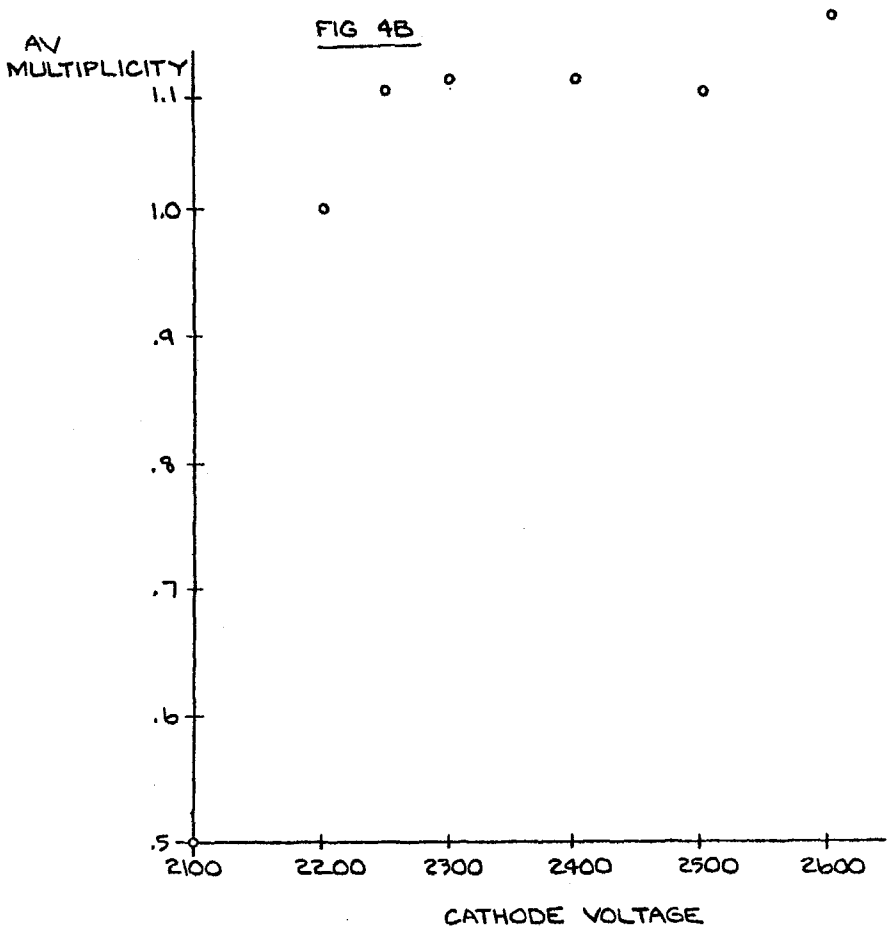

ITEM NO.	PART NO.	

UNLESS OTHERWISE SPECIFIED		
FRACTIONS	DECIMALS	ANGLES
±	±	±

1. BREAK ALL SHARP EDGES 1/64 MAX.
2. DO NOT SCALE DWG.
3. DIMENSIONING IN ACCORD WITH ANSI Y14.5 STD'S.

√ MAX. ALL MACHINED SURFACES

FERMI NATION