Fermilab

TM-1056
1670.000

CRYOGENIC OPERATIONAL PROBLEMS DURING A QUENCH OF DOUBLER MAGNETS

PREPARED UNDER FERMILAB SUBCONTRACT NO. 96727
BY CRYOGENIC CONSULTANTS, INC.
ALLENTOWN, PA.

FOR

FERMI NATIONAL ACCELERATOR LABORATORY
BATAVIA, ILLINOIS

July 9, 1981

CONTENTS

Section	Title	Page No.
A	INTRODUCTION	2
B	ASSUMPTIONS FOR THE SYSTEM PARAMETERS FOR THE DOUBLER	3
C	HEAT TRANSFER IN THE 8 IN. HEADER	3
D	PRESSURE DROP IN THE 8 IN. HEADER	7
E	RELIEF VALVE CHARACTERISTICS	13
F	EFFECTS ON REFRIGERATION SYSTEM OF THE DOUBLER	14

CRYOGENIC OPERATIONAL PROBLEMS DURING A QUENCH OF DOUBLER MAGNETS

A. INTRODUCTION:

A preliminary report (CCI 465-101) was issued on May 1, 1981. This report covered the same topic as this report, but was based on a relatively low flow rate of liquid helium into the 8 in. header during the quench of doubler magnets. Recent data from B 12 tests indicate that the flow rate from the magnets is much larger than was assumed. This report is based on a more realistic flow rate from the magnets during quench.

An 8 in. low pressure helium gas line is located in the tunnel parallel to the magnets of the doubler. This line serves two purposes:

1) Under steady state condition, the line collects low pressure gas from the satellite refrigerators and returns this gas to the Mycom compressors. Maximum flow rate at each compressor station is 120 g/sec.

2) When quenching of magnets occurs, a minimum of eight magnets will quench simultaneously. The fluid from these eight magnets will enter the 8 in. header over a span of approximately 160 ft.

The second condition adds a large amount of helium to the 8 in. header, and for a short period of time steady state flow rates are exceeded by a large factor. The rate of fluid transfer from the magnets to the header is not known exactly. However, there are some data available from B 12 test runs.

B 12 test data indicate a flow rate of 5-10 liters of liquid per second from the magnet for a period of 2-1 sec. For lack of better data, we will assume that the magnets will flow at a rate of 9 liters per second and that a total of 15 liters of liquid per magnet will be driven into the 8 in. header.

To prevent the header from overpressurization, flat plate relief valves are located at 800 ft intervals. The plates are held in place by means of studs and are spring-loaded. The valves start to open at a pressure

differential of 4 psig. Total flow capability as a function of plate lift and header pressure is not known.

Part of an 8 in. header has been used at the B 12 test facility. The doubler will be connected to a complete ring of 8 in. header with an approximate length of 20,000 ft. Volume of this header is some 7,700 cft.

This report addresses itself to some of the system operational problems which occur when quenching takes place. These operational problems are considered for the doubler operation.

B. ASSUMPTIONS FOR THE SYSTEM PARAMETERS FOR THE DOUBLER:

1) Eight dipoles will transfer, at most, 180 liters of liquid equivalent to the 8 in. header in a period of 2 sec.

2) The fluid entering the header will be at a temperature of 20°K. A variation of ± 10°K is not significant within the accuracy of this report.

3) There are six compressor stations along the ring (at A_o, B_o, C_o, D_o, E_o, and F_o). Each of these stations is equipped with four parallel screw compressors. Total pumping capacity is 1,440 grams/sec. with a suction pressure of 0-.5 psig. Pumping capacity of these compressor stations is proportional to the absolute suction pressure.

4) There are twenty-four satellite refrigerators located at intervals of approximately 800 ft. The shell side of the heat exchangers is in open connection with the header. Normal flow is from satellite refrigerator to header at a rate of 60 grams per sec (maximum).

5) The 8 in. header is equipped with pairs of shutoff valves at twenty-four locations. These valves are located midway between satellite refrigerator locations. Under normal operating conditions all valves are open.

C. HEAT TRANSFER IN THE 8 IN. HEADER:

The quench fluid will be heated by the 8 in. header. The rate at which the gas is heated can be predicted reasonably well once flow rates are established. A typical quench scenario is the following:

Cold fluid is added to a section of 8 in. header (160 ft long) at intervals of 20 ft. Fluid flow is away from this section of header in two directions immediately after the quench is initiated. The warm gas present in 160 ft of header is replaced with cold gas within .1 sec, since the header contained 300 grams of warm gas and flow rate into 160 ft of header is 90 ℓ/sec = 11,250 grams/sec.

Some simplifications may be made as follows:

a) The wall of the pipe will be considered to remain at a constant temperature during the 2 sec of venting. The heat capacity of the pipe is 2,000 Joules/°K linear ft when at ambient temperature. Heat transfer coefficients (Table 1) will be in the range of 35-120 m Watts/cm^2 °K with the lower and upper coefficients applicable for very cold gas and gas of approximately 200°K, respectively.

   With a surface area of 2,050 cm^2 per linear ft, a temperature difference of 280°K, maximum heat transfer in 2 sec is .08 x 2000 x 280 x 2 = 89,600 Joules per ft of pipe. Temperature drop of the pipe is then of the order of 45°K.

b) Flow will be away from the center of the 160 ft long 8 in. header. Mixing of gas takes place at 20 ft intervals. At each point, gas heated by heat transfer to 20 ft of pipe will mix with cold gas venting from the next magnet. Again, heat transfer will take place in 20 ft of pipe, and mixing will occur again with venting gas from the next magnet. Figure 2 shows the process schematically.

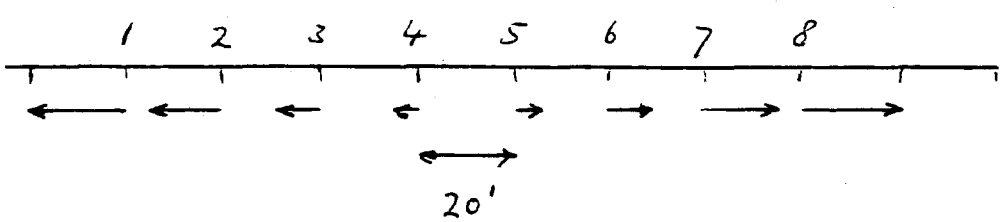

FIGURE 2

Beyond the number 1 and 8 stations, flow rate does not change anymore.

c) Because temperature of the wall of the pipe has been assumed to be constant, temperature of the gas at any point in the line will be constant. For the short duration of the event, there will not be a moving temperature front.

Heat transfer coefficients have been calculated for the various flow rates in the short sections of pipe between vent points. Also, coefficients have been calculated for the sections of pipe beyond the last vent point. Tables I and II provide the data:

TABLE I

Heat Transfer Coefficients as a Function of Temperature and Pressure (Units are mW/cm^2 °K)

Flow Rate g/sec	TEMPERATURE - °K 40	80	125
1405	34.2	37.8	40.0
2810	60.1	65.8	69.7
4215	82.2	90.7	96.1
5625	104.0	114.5	121.4

TABLE II

Heat Transfer Coefficients as a Function of Temperature at a Flow Rate of 5,625 g/sec

T (°K)	80	125	200	250
h (mW/cm^2 °K)	114.5	121.4	131.5	136.1

When cold gas flows into a pipe of constant temperature, temperature change of gas as a function of length traveled may be determined from:

$$\ln K = \frac{h \quad A}{C_p \quad W}$$

Where:

$$K = \frac{T_{wall} - T_{in}}{T_{wall} - T_{out}}$$

h = heat transfer coefficient

A = surface area of pipe

C_p = specific heat of gas

W = flow rate of gas through pipe

The equation enables us to calculate the temperature of the gas in the mixing section of the header and to determine the temperature of the gas entering the 8 in. header beyond the last mixing point. Table III provides the data:

TABLE III

Temperature of Gas at Vent and Mix Points (Points refer to those of Figure 2.)

Point	Before Point °K	After Point °K
1	94.9	76.0
2	78.0	58.6
3	68.6	35.0
4	20.0	20.0
5	20.0	20.0
6	68.6	35.0
7	78.0	58.6
8	94.9	76.0

Table IV provides the calculated values of gas temperature versus length of pipe, starting from the last mixing points 1 and 8 of Figure 2:

TABLE IV

Length of Pipe - Ft	Temperature °K
0	76.0
20	109.3
40	139.2
60	165.6
80	188.1
100	206.8
120	222.5
140	235.8
160	246.8
180	256.0
200	263.6
220	270.0
240	275.2

D. PRESSURE DROP IN THE 8 IN. HEADER:

Once temperature distribution in the header has been established, it is possible to make an estimate of the pressure drop required to move gas at the high flow rate away from the area of the quenching magnets. The pressure drop and location of quenching region relative to the relief valves will determine whether one or more relief valves will open and release gas to the atmosphere. Pressure drop will be calculated using the following correlation:

$$\frac{\Delta P}{L} = \frac{f\,(G^1)^2}{193\,\rho\,d_h} \text{ psig/ft}$$

Where: $f = \frac{.046}{Re^{.2}}$

G^1 = mass flow rate in lb/sec ft^2

ρ = density in lb/cft

d_h = hydraulic diameter in inches

In order to simplify matters without yielding much in accuracy, f will be considered a constant calculated at a temperature level of 280°K. The value of f increases by 15% when temperature increases from 100 to 300°K. Since most of the header will be filled with gas at 280°K or warmer, the constant value will increase the calculated value for 320 ft of pipe (nearest relief valve) by less than 5%.

The expression for $\frac{\Delta P}{L}$ now becomes:

$$\frac{\Delta P_1}{L} = \frac{.0025 \times (32.18)^2}{193 \times 8.4} \frac{1}{\rho}$$

$$= \frac{.00160}{\rho} \text{ psig/ft}$$

The lowest value of ρ will occur at the location of the relief valve. At this point the gas is at ambient temperature, and the pressure will be a function of the flow rate through the relief valve.

The relief valves presently used are simple devices as shown schematically in Figure 3.

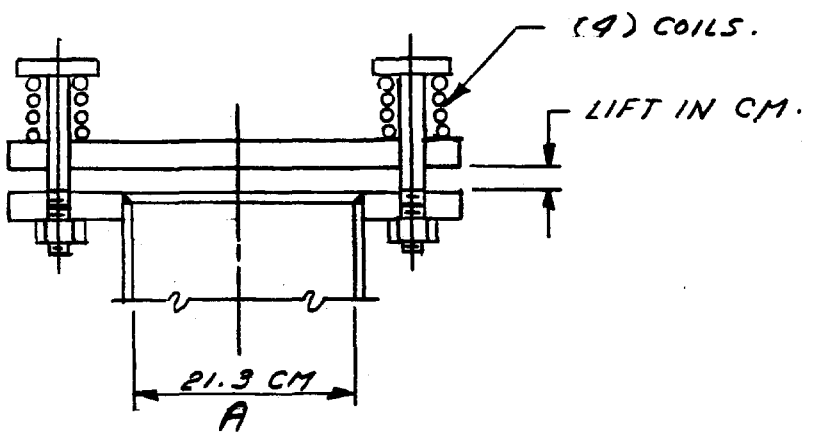

Relief Valve

FIGURE 3

A flat plate is loaded by 4 parallel springs. The minimum pressure required to open the valve has been reported to be 4 psig. At a lift of 2 in., pressure below the plate is 12 psig. The lift is essentially proportional to the pressure (force) exerted on the plate.

The flow characteristics of the relief valve are not known. A rough approximation may be made by assuming that two velocity heads are lost in flowing radially out through the space between plate and flange. Actual capacity may be somewhat different.

The physical arrangement of piping in the tunnel in the vicinity of the relief valve is shown in Figure 4.

Ells and tees cause additional pressure drop. At each satellite refrigeration station, flow is through a section as shown in Figure 4. The tee, Item 2, connects to a straight section of 8 in. pipe of approximately 20 ft length. The relief valve is located at the top of this section. The gas has to pass through four 90° ells and one tee to get from one straight section into the next one. The pressure drop of this assembly will then influence the rate at which the relief valve will pass gas to the atmosphere.

To determine the rate of venting at the two relief valves closest to the quench, it is necessary to determine the pressure at the tees (Item 2 of Figure 4) and to calculate four flow rates from these points out. The total of the four flow rates is the rate at which the quench gas enters the 8 in. pipe minus the inventory change of the section of 8 in. pipe between relief points.

The inventory change turns out to be significant, as demonstrated by the following numbers. Assume, after one second, that the temperature distribution in 800 ft of 8 in. pipe between relief valves is as given in Table V.

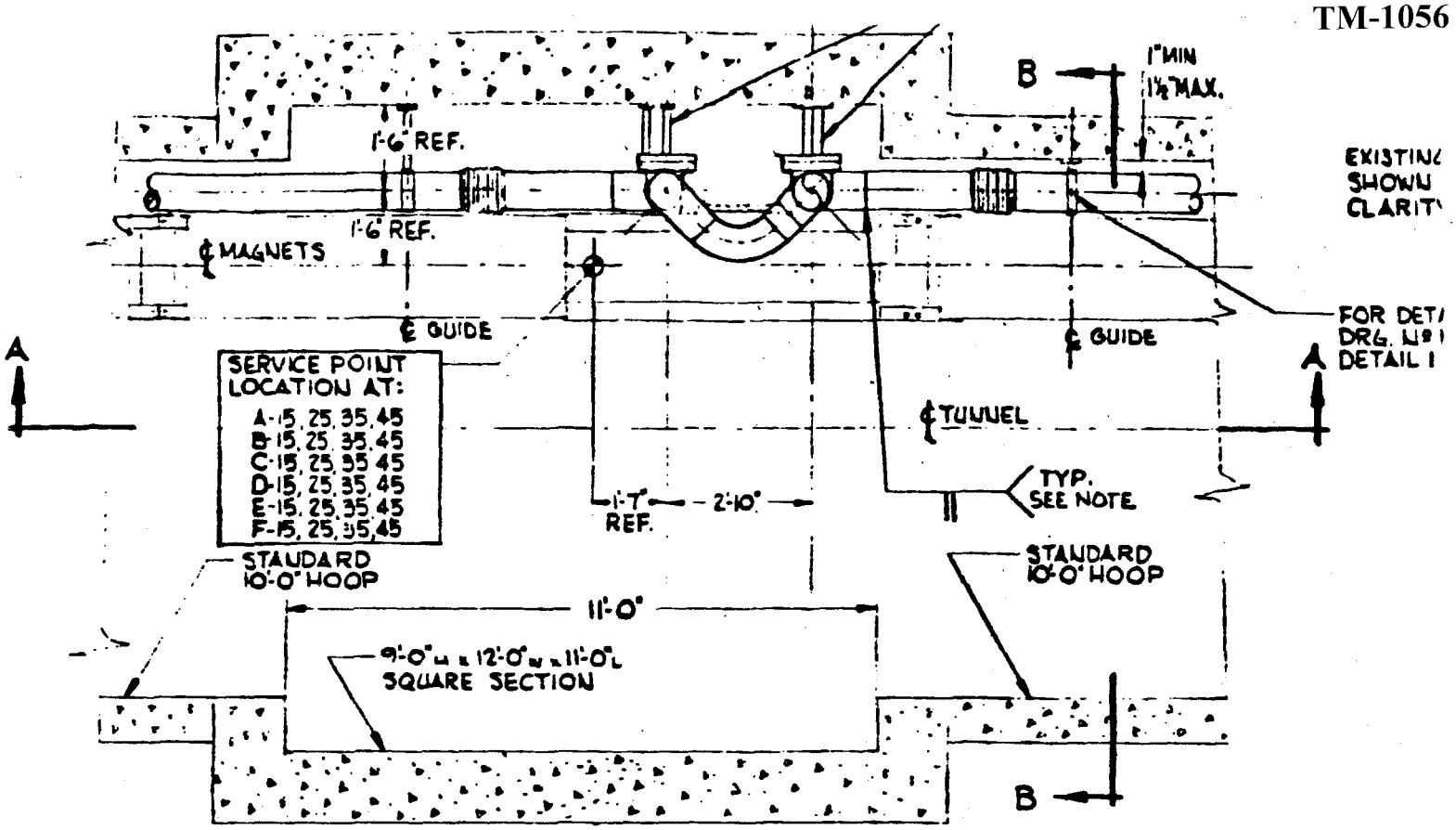

PLAN VIEW

TYPICAL AT 24 LOCATIONS AROUND ACCELERATOR

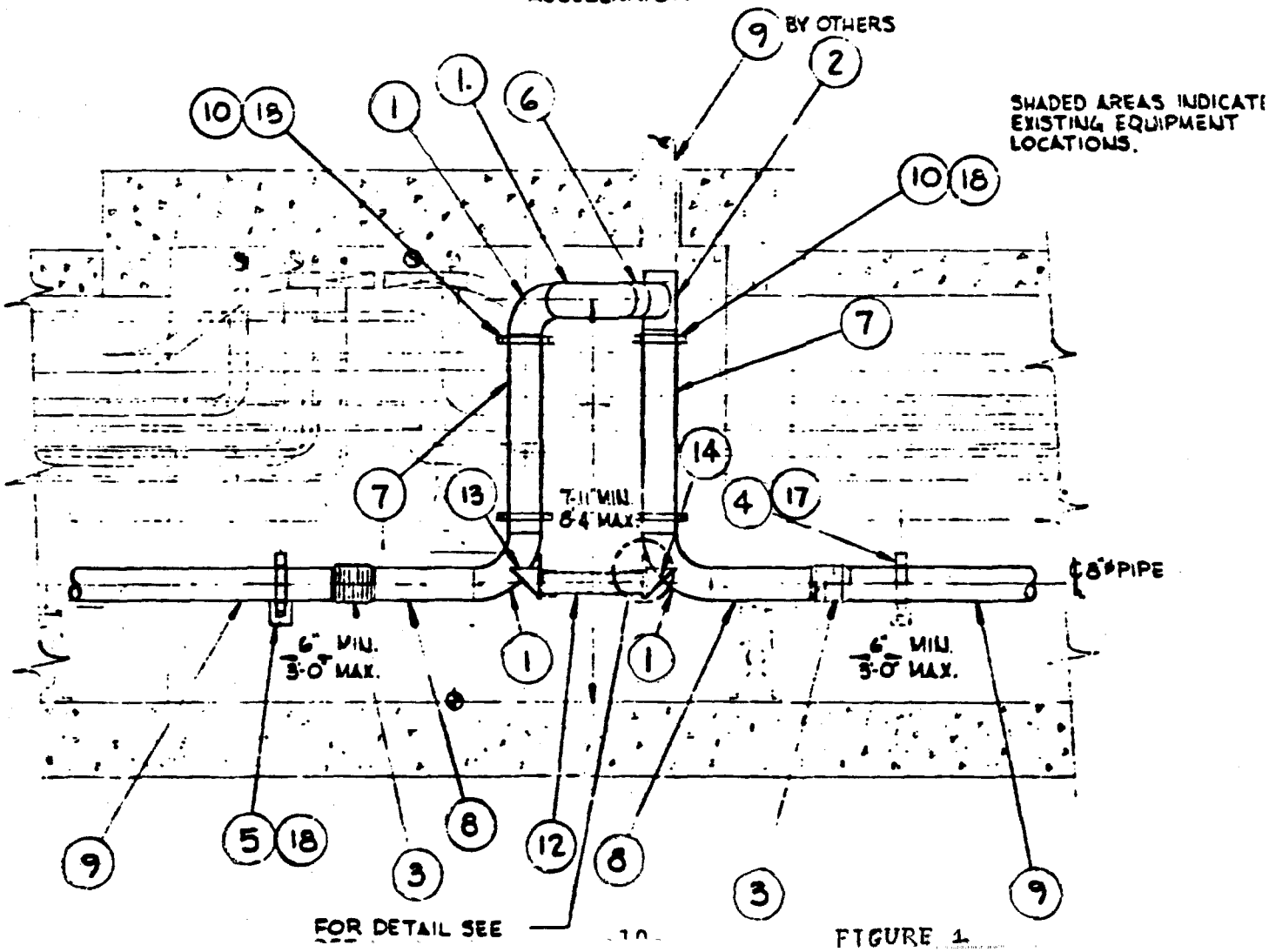

FIGURE 1

TABLE V

Temperature Distribution in 800 ft of Pipe
Quench Area is Centered in 800 ft of Pipe

Length ft	Av. Temp °K	Inventory in Section (grams)	
		2.0 ata	3.0 ata
160	50	3378	5068
2 x 60	120	1048	1572
2 x 100	200	1063	1595
2 x 160	260	1305	1957
Total 800 ft		Total 6794	9192

The initial inventory in the 800 ft section (at p = 1.2 ata and T = 300°K) was 1704 grams. Temporarily, as much as 7490 or 5090 grams of gas at 3 and 2 ata respectively may be stored.

The numbers of the table indicate that the gas present in the header at the moment that the quench starts needs to be moved at a velocity which is in the range of 800 ft/sec, in order to make room for the cold gas added to the 8 in. pipe. Since sonic velocity for helium gas at ambient temperature is in the range of 3300 ft/sec, pressure required to move the gas is not extremely high. To get a feel for pressure drop in the warm section of pipe containing warm gas, we can calculate the mass flow rate at a velocity of 800 ft/sec and then determine roughly how much pressure drop is required to move it.

Density of gas at 1.2 ata and 300°K is .000195 g/cc (.012 lbs/cft). Move at a rate of 800 ft/sec yields

$$G^1 = 9.74 \frac{\text{lbs}}{\text{sec ft}^2}$$

$$G = 35091 \frac{\text{lbs}}{\text{hr ft}^2}$$

This is not a high flow rate in a 8 in. pipe and pressure drop is

$$\frac{\Delta p}{L} = \frac{f \quad (G^1)^2}{193 \ \rho \ d_h} \text{ psig/ft}$$

$$f = .0033$$

$$\frac{\Delta p}{L} = \frac{(.0035) \ (9.74)^2}{193 \times .012 \times 8.4} = .016 \text{ psig/ft}$$

Additional pressure drop for this warm gas flow occurs in the ells and tee at the point where the relief valve is located. If we assume half and a whole velocity head in ell and tee respectively we find:

$$P_{ell} = .41 \text{ psig}$$

$$P_{tee} = .82 \text{ psig}$$

The above calculated pressure drops apply after the velocity has been established. Pressure is also required to generate this velocity since at time zero (start of quench) velocity in the 8 in. header is essentially zero.

A worst condition may be assumed by considering a slug of gas in the pipe as incompressable and to calculate what force it takes to accelerate this mass to the velocity of 800 ft/sec.

Consider first 300 ft of pipe on either side of the quench and accelerate the gas in the pipe to 800 ft in .2 seconds. It is necessary to exert 120 g's on the slug of gas. Its weight is 640 grams and force required is 76,800 grams. This force is applied over the cross section of the pipe, and is the equivalent of 216 g/cm^2 or 3.2 psig.

Once some cold gas has been vented into the 8 in. pipe, pressure required to accelerate the cold mass to full velocity becomes considerably larger. For instance, a plug of gas at 50°K at 2 ata of 100 ft length weighs 2164 gr. To accelerate to 800 ft/sec in .2 sec requires a force of the order of 10-11 psig.

When considering all the pressure drops, acceleration force and basic pressure of 4 psig for initial lift of the relief plate, it appears that the pressure in

the 8 in. header at the quench point will be at least 2 ata and probably more, dependent on the rate of venting during the first fraction of a second. It can conceivably rise to 3-4 ata for a short period of time. Relative location to the nearest relief valve also has some effect.

E. RELIEF VALVE CHARACTERISTICS:

The relief valves used on the 8 in. header are located at the satellite refrigerator locations. Figure 3 shows schematically the design of the relief valve. It has been reported that the spring loading of the top plate requires a pressure differential of 4 psig before the valve opens and that valve plate lift is 2 inches at a pressure differential of 12 psig. Flow capability at this condition has not been measured. A rough idea of flow capability may be generated, that flow through the valve requires $2 \times 1/2\rho v^2$. At 275°K and 1.2 ata ρ = 0002127 g/cc. Velocity is then 43,600 cm/sec and maximum mass flow rate through the valve will be of the order of 3000 g/sec.

In the considerations on pressure drop, it was assumed that warm gas needs to move at a velocity of at least 800 ft/sec and that this velocity is reached in a matter of .2 sec. Flow through the relief valve at this velocity in the 8 in. header is a relatively small fraction of its maximum capacity. If we assume a velocity of 800 ft/sec at the tee, flow divides and a major fraction diverts into the next branch of 800 ft of header because a pressure of 4 psig needs to be generated as a minimum to open the valve. Assume half of the flow goes to the valve. This is then at a velocity of 400 ft/sec. Mass flow rate is then of the order of 1000 g/sec (p = 1.25 ata). If the relief valve is 40% open, flow area is approximately 140 cm^2. Density of gas in flow area is .000195 g/cc. Volume flow rate is

$$\frac{1000}{.000195} = 5.1 \times 10^6 \text{ cc/sec}$$

Velocity is 36,630 cm/sec.

$$2\rho v^2 = 3.9 \times 10^{-4} \times 13.41 \times 10^8$$

$$= 52 \times 10^4 \text{ dynes/cm}^2$$

$$= .5 \text{ ata}$$

$$= 7.5 \text{ psig}$$

With this pressure the valve is slightly less than half open.

It is possible to draw some broad conclusions from the previous deliberations, as follows:

a) The rate of venting, including first and second derivatives of mass versus time has an important bearing on events. This is mainly because of pressure required at various points in the 8 in. header to start accelerating a mass of gas essentially at rest before the quenching occurs.

b) Because of the short duration and limited amount of refrigeration present in the vented gas, the temperature front in the 8 in. pipe does not move. Also for the first couple of seconds, when mass flow rate into the 8 in. pipe is high, pipe wall temperature is essentially constant.

c) When the quench occurs midway between two relief valves, gas flowing through these relief valves will be essentially warm. The relief valves will not become cold.

d) When the quench occurs midway between two relief valve locations, pressure at the quench point in the 8 in. pipe may reach a value of 2-4 ata for a short duration of time dependent of first and second derivative of mass flow versus time.

e) The relief valves will relieve relatively small flow rates with magnet quench occurring midway between relief valves. At least half of the mass ejected from the magnet will distribute in the 8 in. header and pressure in the bulk of the header will rise to a value of 4 psig. At this pressure level venting will take place to get rid of the other half of the ejected liquid.

f) The maximum capacity of the relief valve will not be used with the present valve characteristics. A major fraction of the flow will always be diverted into the next section of the 8 in. header, mainly because a minimum pressure of 4 psig is required to open the valve.

F. EFFECT ON COMPONENTS OF THE DOUBLER:

1) Effect on Satellite Refrigerators Located Next to the Quenched System:

All satellite refrigerator low pressure systems are coupled to the 8 in. header. At present the connection is through an open line without check valve, and flow could be reversed temporarily.

The control system of the satellite refrigerators will react to the upset as follows (ref. drawing 9120 MC 129169).

a) Because of reduction of flow on the shell side of the exchanger temperature controller TIC-257 H will call for more liquid supply from the CHL.

b) With increased flow from the CHL, wet expander speed will decrease because of a rise in single phase fluid pressure in the magnets.

As a result of the actions of the control system, magnet pressure and temperature will start to rise. The rate of rise of magnet temperature is quite slow because of the large heat capacity of the system. A dipole contains approximately 20 liters (2,500 gr) of liquid. A rise of temperature of .1°K requires a heat input of 1,200 to 1,300 Joules. At 10 W some 2 min. are required.

With the present control system the compressors will maintain discharge header pressure. The satellite refrigerators near the quench will demand less high pressure gas, and the magnet system will get more liquid. The two phase system pressure level will rise until flow is established at the higher pressure level. During the time of reduced or zero flow on the shell side, heat is added to the cold box at a rate of approximately 1,550 $\dot{M}$ Watts, where $\dot{M}$ is the unbalance in flow rate in g/sec.

This heat is in first instance stored in the heat exchangers of the refrigerator. These exchangers act as regenerators. The regenerator will be very effective in the temperature range of 300 to 80°K. Between 80 and 6°K heat capacity of the metal disappears and with it the efficiency of the regenerator. An estimate of time required to move the temperature wave through the exchanger may be made as follows:

a) Mass participating in heat transfer is finned tubing only.

b) A total of 1,500 ft of tubing is present. The tubing weighs .67 lb/ft.

c) At steady state conditions, approximately 300 lb of exchanger operates between 300 and 80°K and 400 lb between 20 and 6°K.

d) Temperature difference between gas and tubing will be assumed to be zero.

e) Heat capacity of exchanger between 300 and 80°K is 50,000 Joules/°K. Heat capacity of 400 lb of exchanger between 20 and 6°K is 3,600 Joules/°K.

f) Sixty (60) g/sec of high pressure flow gives up 69,000 W and 24,000 W to the warm and cold parts of the exchanger, respectively.

Combination of e) and f) above indicates that an unbalance of 60 g/sec will drive the temperature front through the cold exchanger in a small fraction of a second. The warm exchanger can absorb heat for quite a few seconds without a massive temperature breakthrough. It is to be expected that the temperature at the inlet of the wet engine will rise quickly to 20°K or warmer. This results in a substantial slowdown of mass flow rate because the total volume taken in by the engine is of the order of 60 x 7.48 = 449 cc/sec (T_{in} = 7.5°K). Mass flow rate at 20°K inlet temperature will only be:

$$\frac{449}{22.8} = 19.7 \text{ g/sec when operating at constant speed}$$

The discharge of the engine will also warm. This warm gas mixes with liquid flow from the CHL, and the mixture will all become gas. This, in turn, raises the pressure in the single phase system, and at some point the bypass valve EV-154 opens and connects single phase system with the shell side of the refrigerator and the two phase system. Wet engine speed is also reduced by the increase in pressure of the single phase system. This, in turn, further reduces the high pressure flow to the cold box.

In order to make a detailed analysis of the sequence of events, valve and controller character-

istics need to be known in detail. It appears though that the magnet system will not receive warm fluid in the first couple of seconds because fluid flow out of the single phase to two phase is through a fixed orifice and proceeds at a rate of 60 g/sec or less (480 cc/sec or less). The warm wave will not enter the magnet string until all liquid in the system between bypass valve EV-154 and subcooler has been cleared out. Five (5) liters of volume in this system would provi at least 10 sec of time for action.

Extra heat added to the cold box of the satellite refrigerator needs to be removed by extra liquid flow from the CHL. Approximately 110 grams of liquid are required for each 100 grams of gas added to the cold box during the upset.

The length of the disturbance is determined by the time constant of the 8 in. header-satellite compressor system. Pressure level in the 8 in. header reaches 4 psig and from that point reduction in pressure level is accomplished by pumping gas with the satellite compressors from the 8 in. header.

The capacity of the compressors is large relative to the inventory in the header and only seconds are required to reduce the pressure from 4 psig to the original pressure assuming no flow from the individual satellites.

Under the worst of conditions, the satellite refrigerators will be forced to operate for some time with a header pressure of 3-4 psig. This represents a temperature increase of .2°K of the magnets. The magnets will reach the increased temperature level only if the header remains pressurized for a few minutes.

To prevent the disturbance from reaching the magnet string in a major way, it is necessary to prevent the flow of warm gas from the wet expander into the magnet system. The mixture of warm gas from wet expander and liquid from the CHL will possibly result in a stream of superheated gas. The subcooler will cool this gas and possibly might cool it to a temperature of less than 5°K. To be sure that superheated gas does not reach the magnets, it would be advisable to close the

J-T valve between single phase and two phase systems, and to open bypass valve EV-257 until the warm temperature wave in the heat exchanger column has been removed.

In general, the satellite refrigerator-magnet system located next to the quenched system will experience the following effects.

a) Low pressure flow into the 8 in. header stops until pressure in this header is again reduced below the pressure level in the two phase system.

b) The high pressure flow into the cold box of the satellite refrigerator continues. The rate will be reduced, because wet expander speed will be reduced and wet expander inlet temperature will increase.

c) Liquid flow from the CHL will increase.

d) Because of b) and c) pressure in the single phase system of the magnets may rise to the point where J-T bypass valve EV-257 opens.

e) Because of rising pressure in the two phase system, magnet temperature will increase at a slow rate. Heat capacity of the single phase liquid is large.

f) If flow to the magnet system is not cut off, superheated gas may enter the first magnet. This will quench the magnet.

2) <u>Effects on Satellite Refrigerator Directly Coupled to the Quenching Magnet String</u>:

Pressure in the single phase system will rise very rapidly. Wet engine speed will immediately be reduced to the minimum, and J-T bypass valve will open. Increase in flow to the shell side and decrease of high pressure flow will close the liquid supply valve from the CHL. If not directly from heat flux, the two phase system will quickly pressurize to at least 8 in. header pressure.

3) <u>Effect on Magnets</u>:

The simultaneous quenching of eight magnets in series generates a high pressure in the single phase system of these magnets. Fluid starts flow-

ing from these magnets into the relief systems. Also, fluid will start flowing into the magnets adjacent to the quenching string. Initially this fluid is liquid helium from the end box of the quenching magnet. If the pressure persists, superheated fluid may flow into the magnets adjacent to the quenching string. If these magnets are powered at this time, a second quench will be initiated.

Liquid helium is compressible. The compression is isentropic, and it can be estimated how much the liquid helium in non-quenching magnets becomes compressed. This, in turn, will indicate the new volume which will be filled with fluid from the quenching magnets. Table VI indicates the change in specific volume when compression takes place from 1.8 to 5 ata.

TABLE VI

Original Condition			Compressed Condition		
P	=	1.8 ata	P	=	5 ata
T	=	4.5°K	T	=	4.85°K
S	=	3.646 J/g °K	S	=	3.646 J/g °K
H	=	11.20 J/gr	H	=	13.77 J/gr
V_s	=	8.11 cc/gr	V_s	=	7.63 cc/gr

The table shows that the liquid helium would be compressed to 94% of its original volume. The actual amount of compression is a function of pressure drop in the single phase system and the length of time during which the high pressure exists. Under normal operating conditions, flow in the single phase system is of the order of 25 to 30 g/sec (Volume flow rate approximately 200-240 cc/sec).

Pressure drop at this flow rate is essentially zero and a much higher flow rate will be reached during the quench.

When fluid entering the magnet from the quenching string becomes superheated, initiation of a quench

of a second string of magnets may occur. This, in turn, would result in quenching the next string. New quenches would be initiated through the transport of warm fluid around the ring.