TM-1032
1700.000

Fermilab

THE REVISED GREAT DOUBLER SHIFT

T. L. Collins and S. Ohnuma

March 17, 1981

Since the doubler geometry was specified in TM-874 (April, 1979) by one of us(TLC), there have been two changes in the design:

1. All quadrupoles are moved downward along the beam line by 6.137".
2. The doubler path length (circumference) is made equal to the main ring path length. The average machine radius is therefore exactly 1,000 m in both rings.

Drawings on pages 1 to 11 of this report have been prepared by SO to replace drawings given in the Doubler Design Report (May 1979, pages A13 to A21) while an independent calculation by TLC is summarized on pages 12 to 17. Discrepancies of one to three mils along the beam direction should be totally insignificant for the magnet installation and alignment.

Notes on the drawings

1. Except in dipoles, the angle between two beam lines is everywhere 0.4298 mrad. This value is the same as in TM-874 or in the Doubler Design Report.
2. All numbers are in inches. Numbers in parenthesis are distance of the doubler beam line relative to the main ring beam line. Positive numbers mean the doubler is

outside (wall side). Neither the longitudinal nor the radial scale is linear in most drawings.

3. On page 7 and page 11, locations calculated by SO are given for the doubler. When the number is different from the value obtained by TLC, the last digit of TLC value is also shown. For example, on page 7, the upstream end of quadrupole Q2F is at 1036.801" according to SO and at 1036.804" according to TLC.

4. Compared to the geometry givin in TM-874 or in the Doubler Design Report, all magnets of the doubler are moved inward by approximately 275 mils.

regular cells (example: station #25)

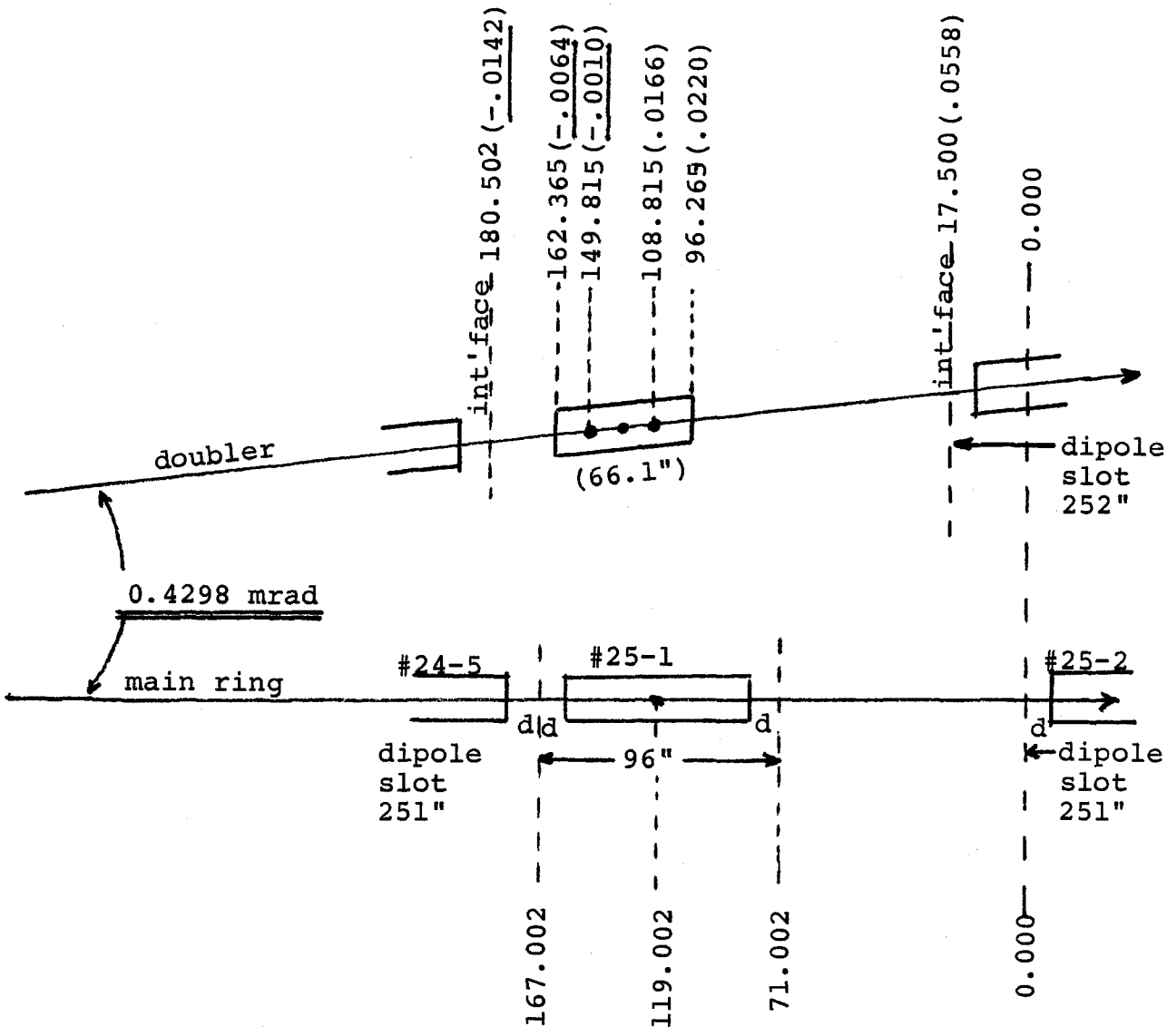

d = 6" (nominal)

Doubler-interface to interface = 180.502 - 17.500
= 163.002" (projected on the MR line)

doubler quadrupole support points = center ± 20.5"

medium straight, upstream

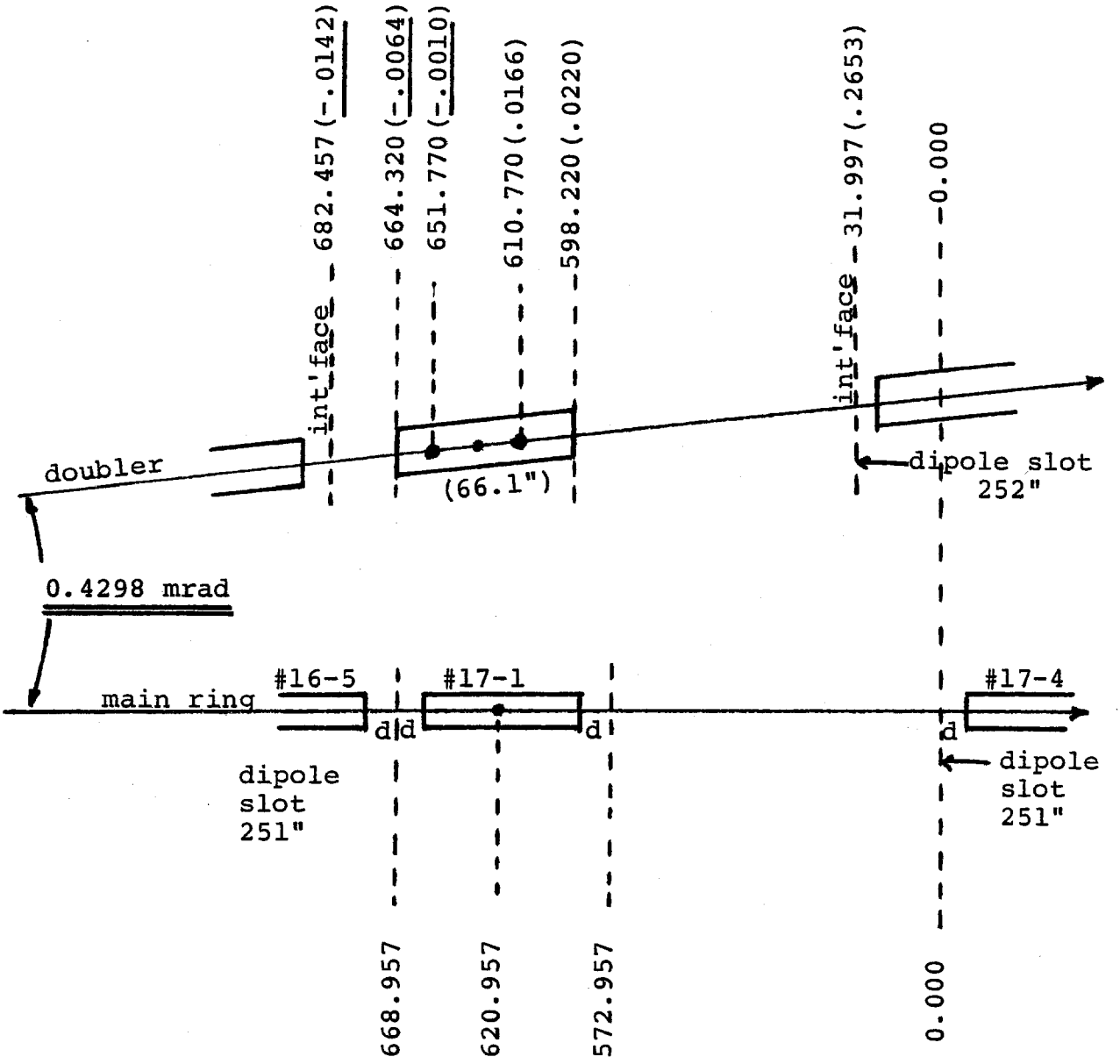

d = 6" (nominal)

doubler interface to interface = 682.457 - 31.997

= 650.460"

medium straight, downstream

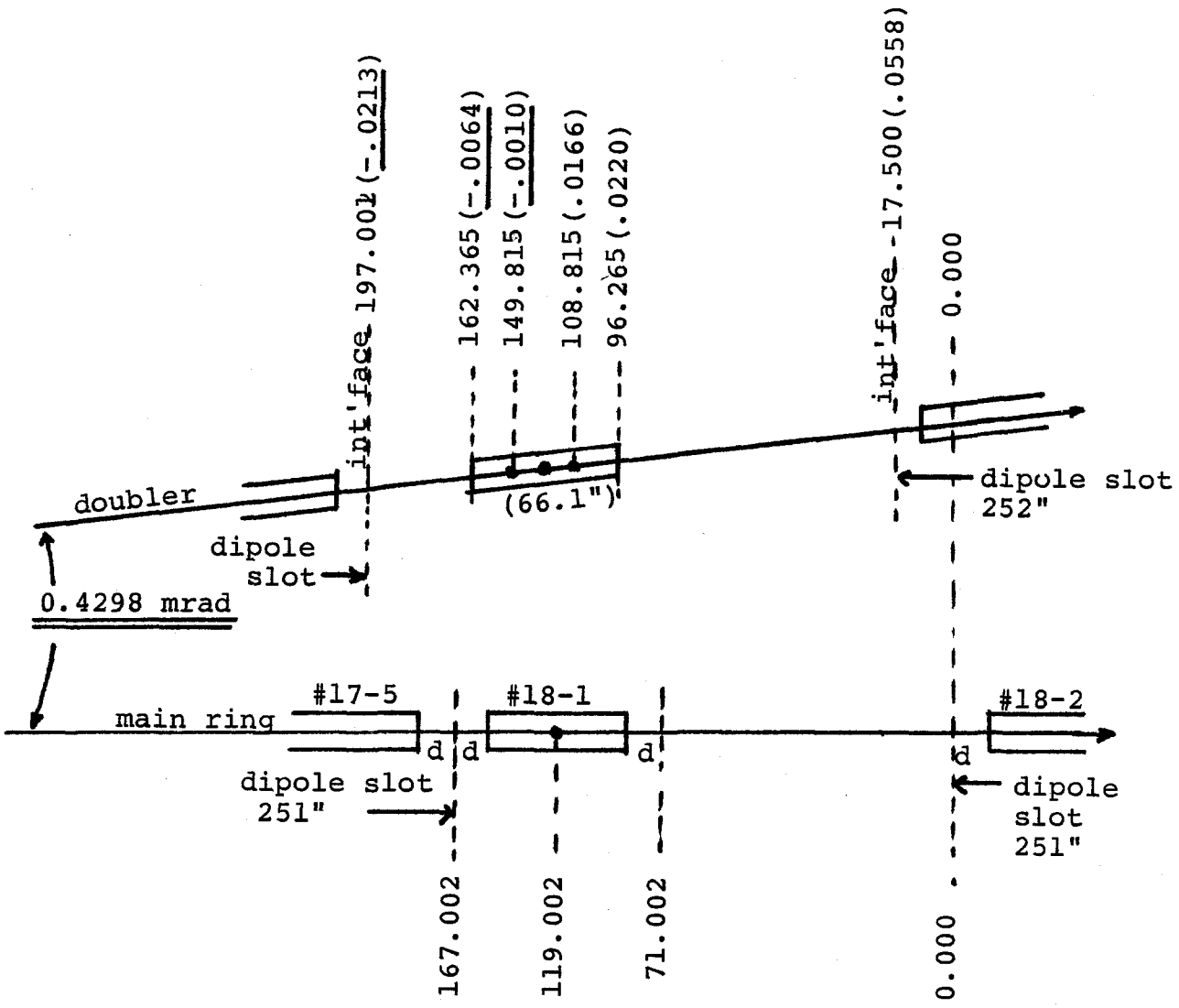

d = 6" (nominal)

doubler interface to interface = 197.001 - 17.500
= 179.501"

normal long straight (BØ, CØ, EØ, FØ), upstream

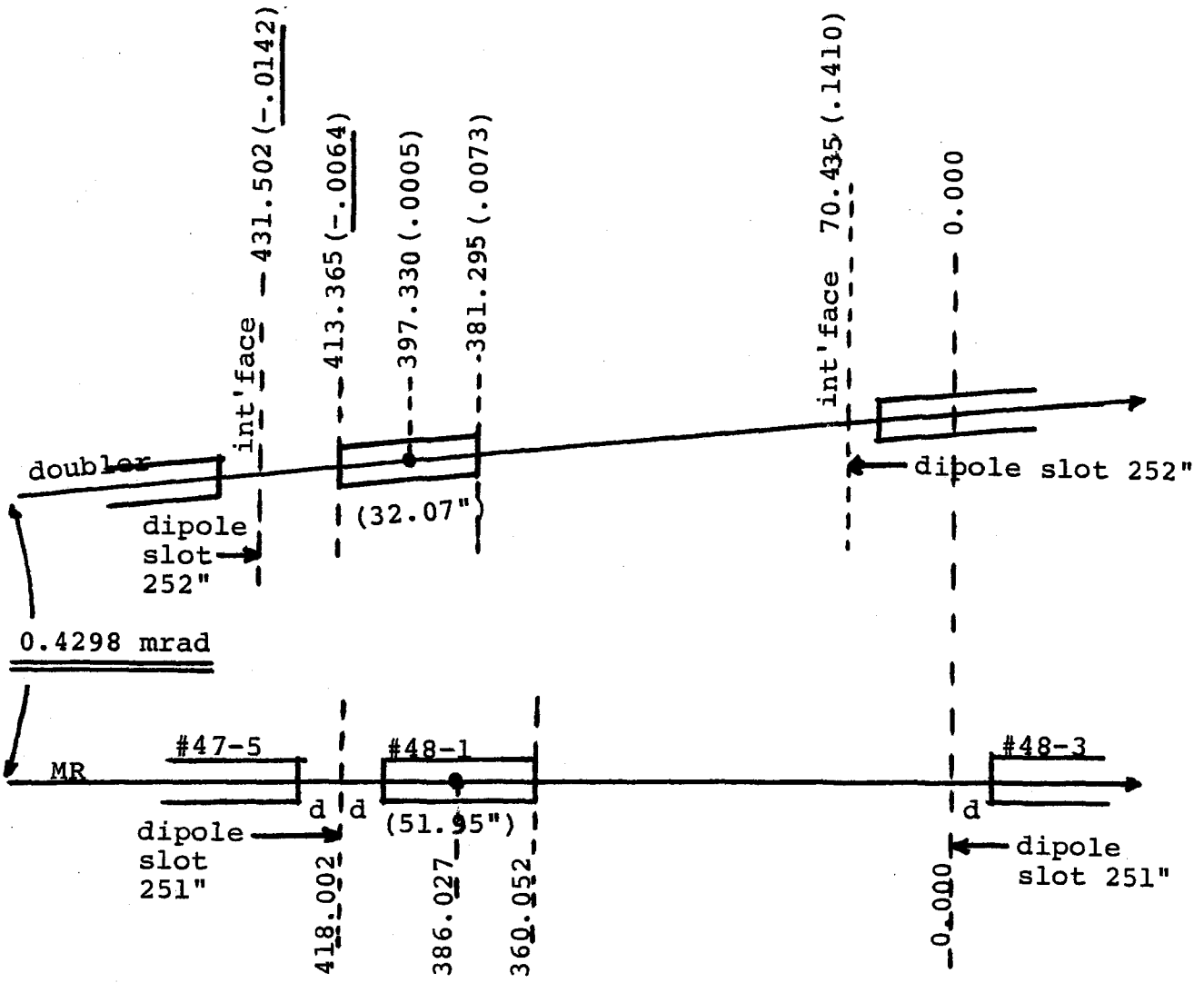

d = 6" (nominal)

doubler interface to interface = 431.502 - 70.435
= 361.067"

normal long straight (BØ, CØ, EØ, FØ), downstream

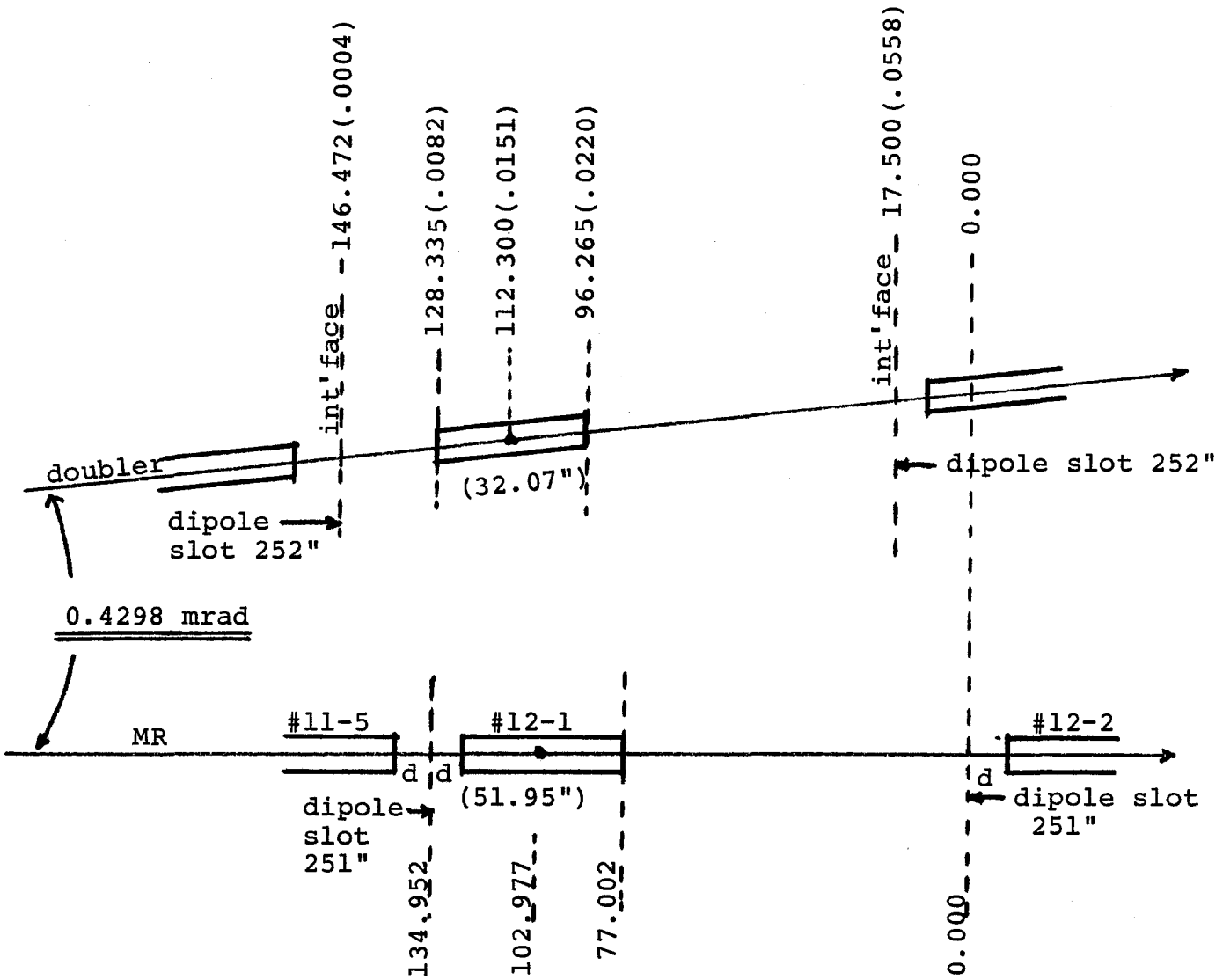

d = 6" (nominal)

doubler interface to interface = 146.472 - 17.500
= 128.972"

normal long straight (BØ, CØ, EØ, FØ)

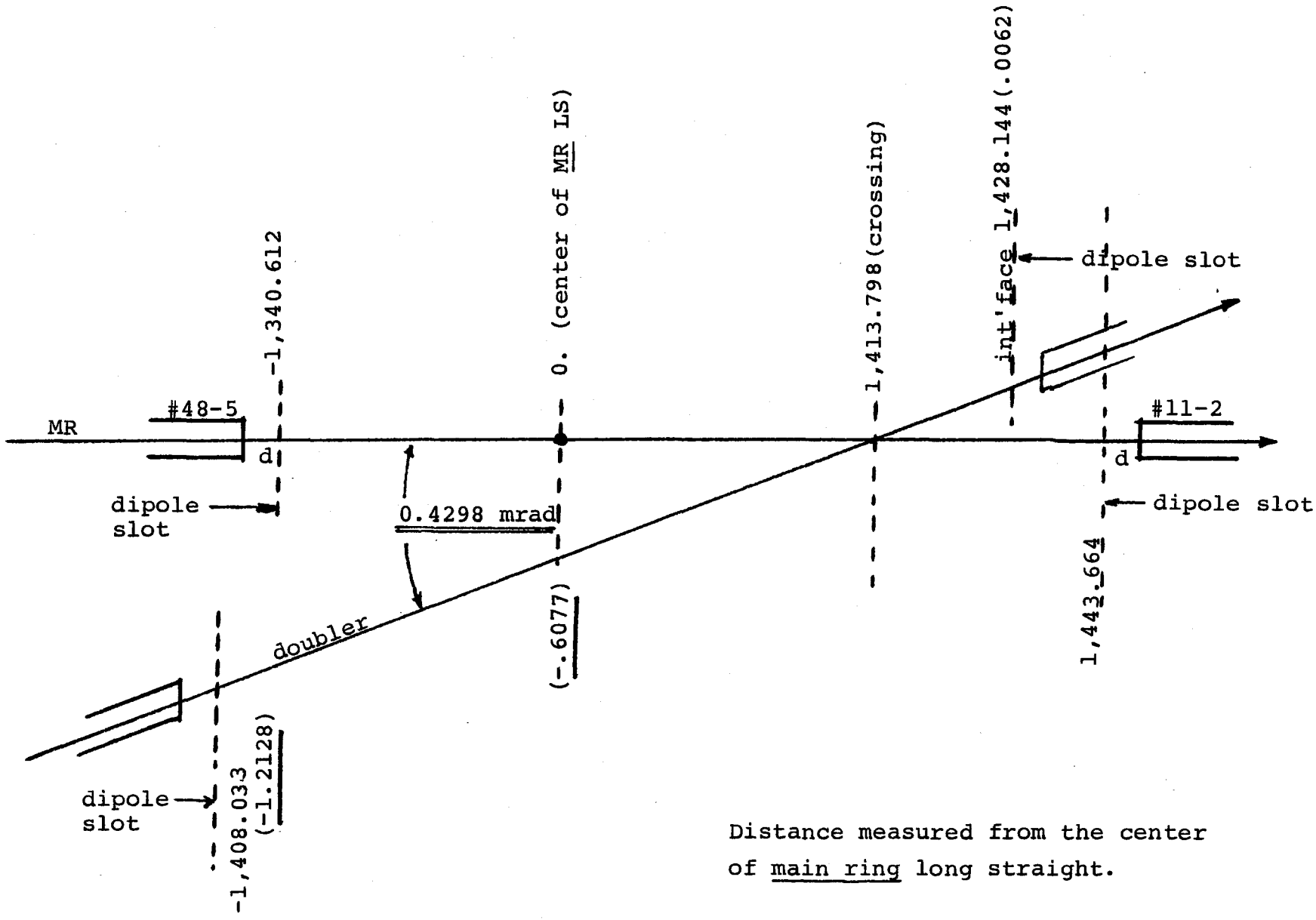

Distance measured from the center of main ring long straight.

normal long straight (BØ, CØ, EØ, FØ)

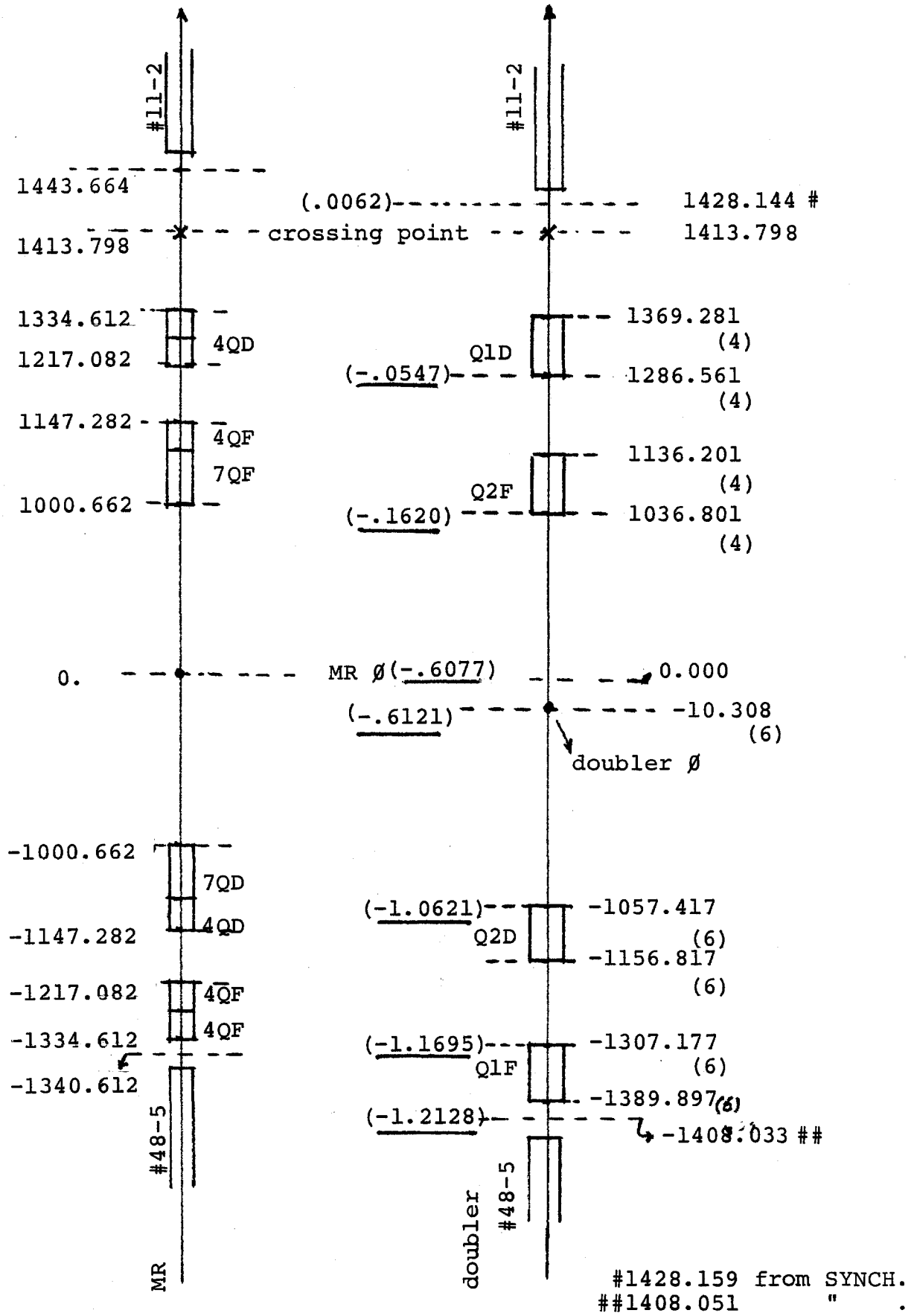

#1428.159 from SYNCH.
##1408.051 " .

high-beta long straight (AØ, DØ), upstream

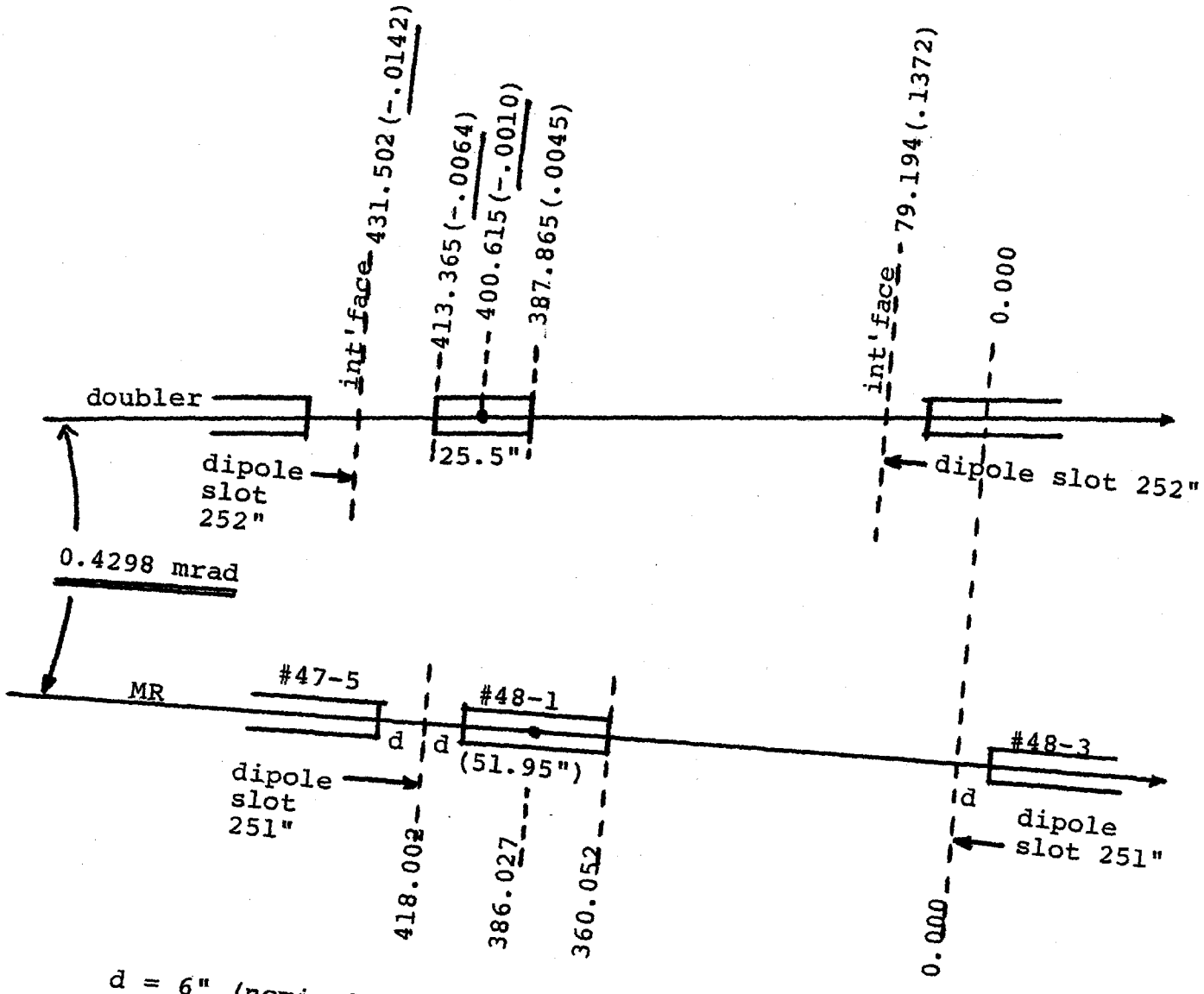

d = 6" (nominal)

doubler interface to interface = 431.502 - 79.194

= 352.308"

high-beta long straight (AØ, DØ), downstream

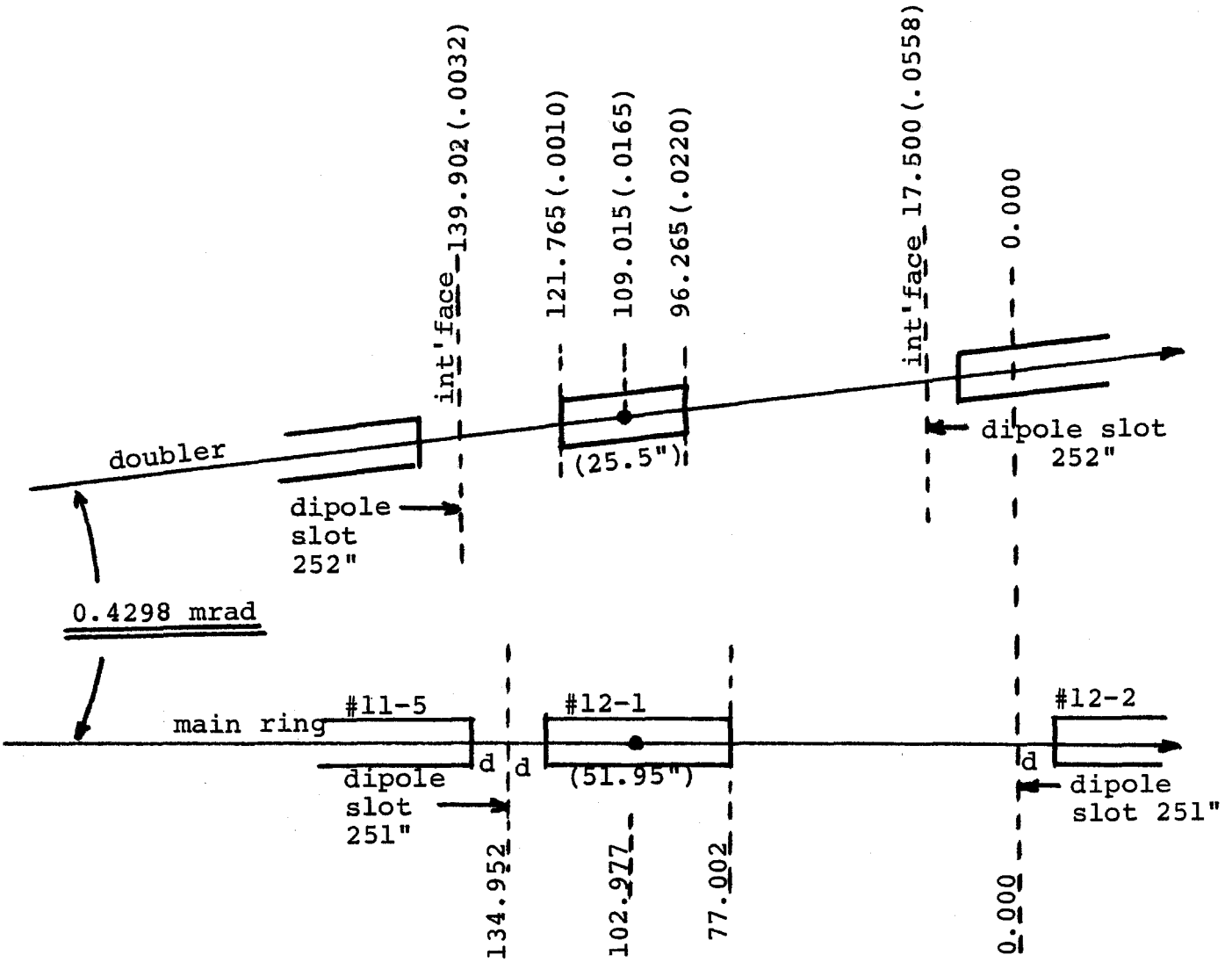

d = 6" (nominal)

doubler interface to interface = 139.902 - 17.500
= 122.402"

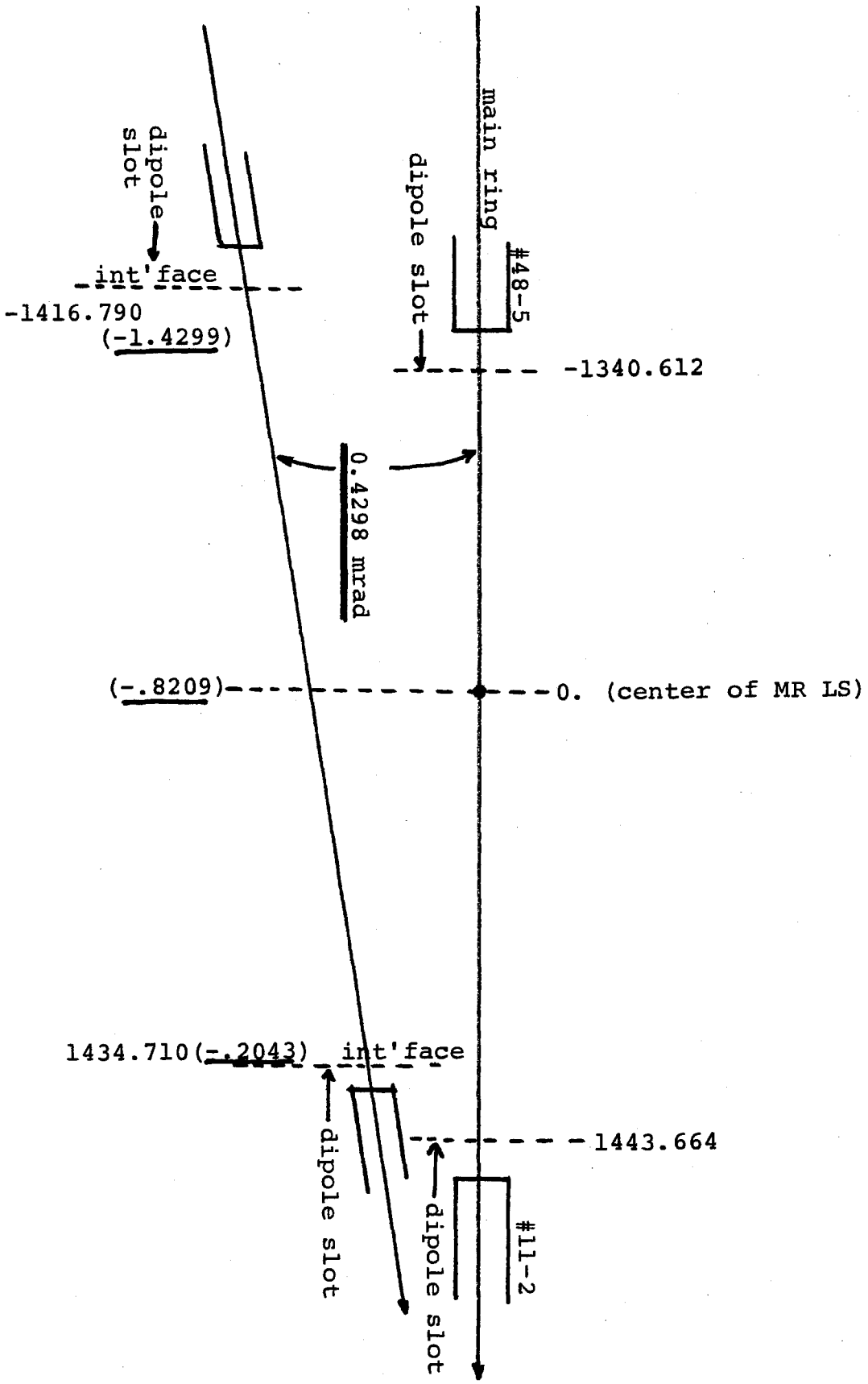

high-beta long straight (AØ, DØ)

high-beta long straight (AØ, DØ)

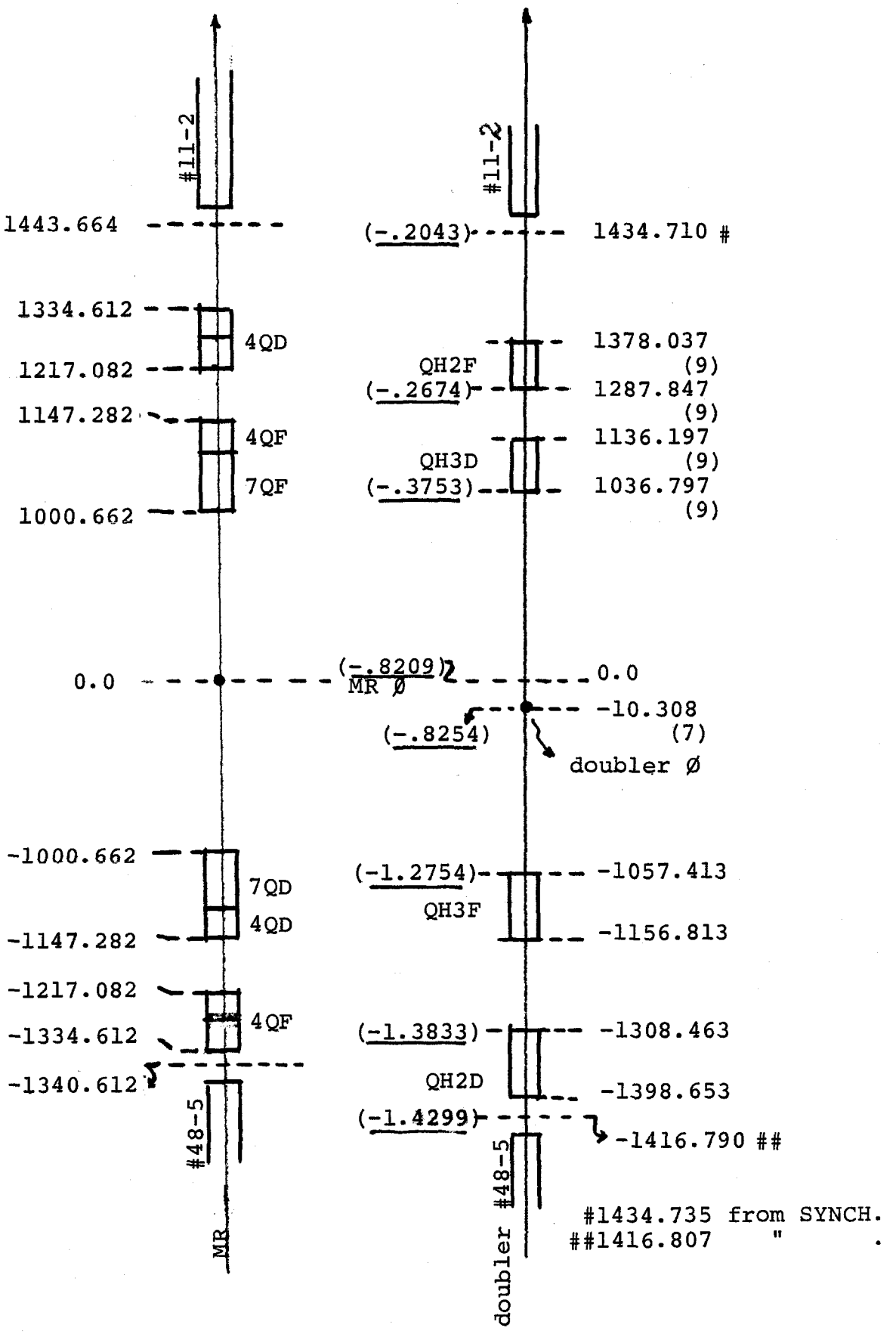

MAIN RING – DEFINED GEOMETRY (DON'T ARGUE)

Geometry determined by bend locations. We can use arcs of circles filling magnet slot, exactly 251" arc length and $\theta = 2\pi/774$.

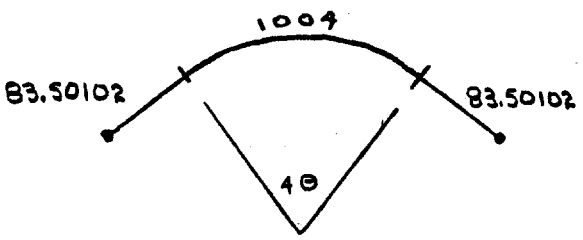

NORMAL CELL

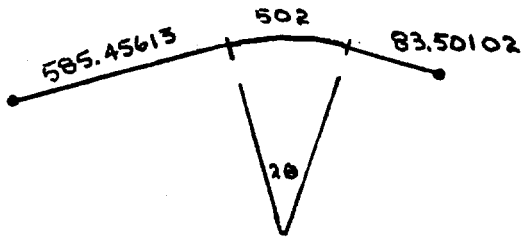

MEDIUM "STRAIGHT SECTION" CELL

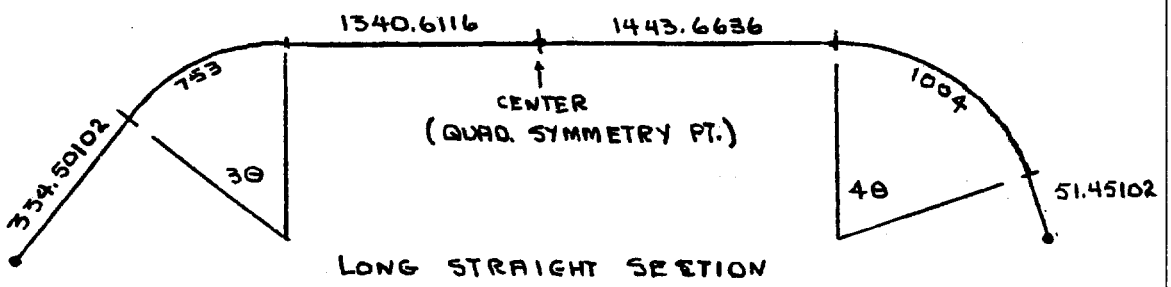

LONG STRAIGHT SECTION

SECTOR SEQUENCE: (5 NORM) (MED.) (25 NORM) (LONG)

DERIVED RADII

EACH GROUP OF NORMAL CELLS, AS DEFINED, HAS A GROUP CENTER.

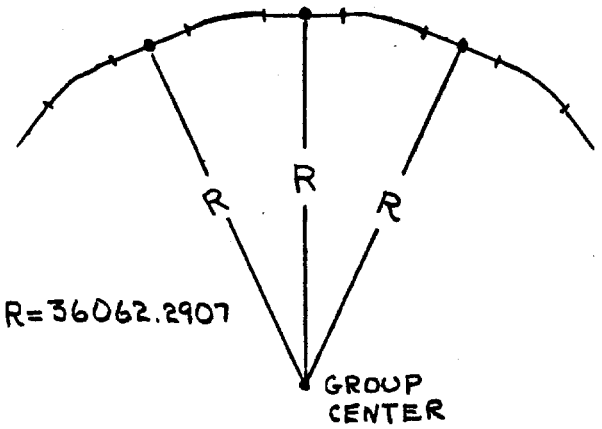

12 GROUPS IN RING.

SECTOR CLOSURE
(CONSISTENT WITH STATION MARKS)

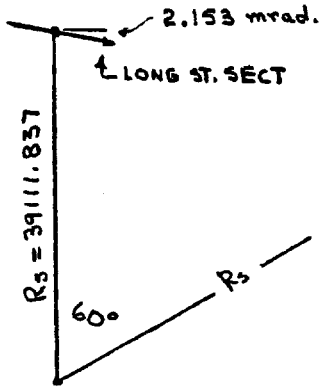

RING CENTER

DOUBLER GEOMETRY. DEFINED IN SAME MANNER AS M.R.

252" BEND SLOTS, SAME PATH LENGTH AS MAIN RING.

PECULIAR RELATION TO MAIN RING, SEE NEXT PAGE.

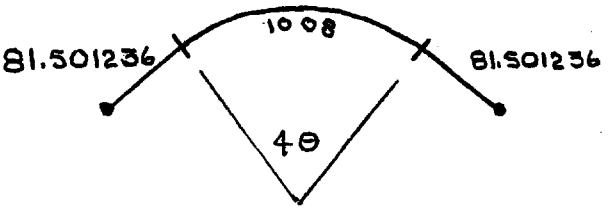

NORMAL CELL

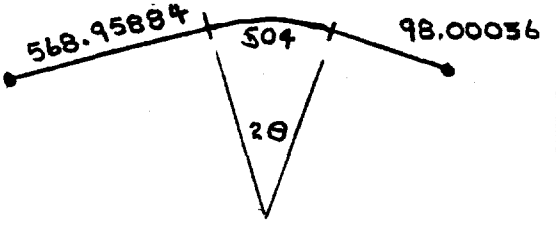

"MED. ST SECTION" CELL

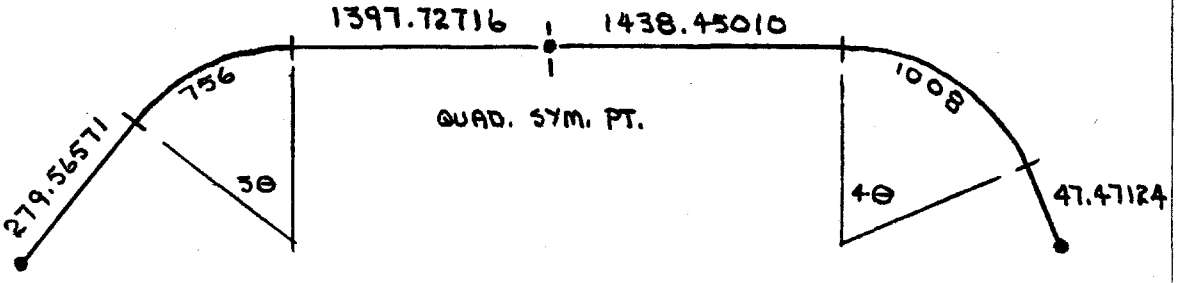

REGULAR LONG STRAIGHT SECTION

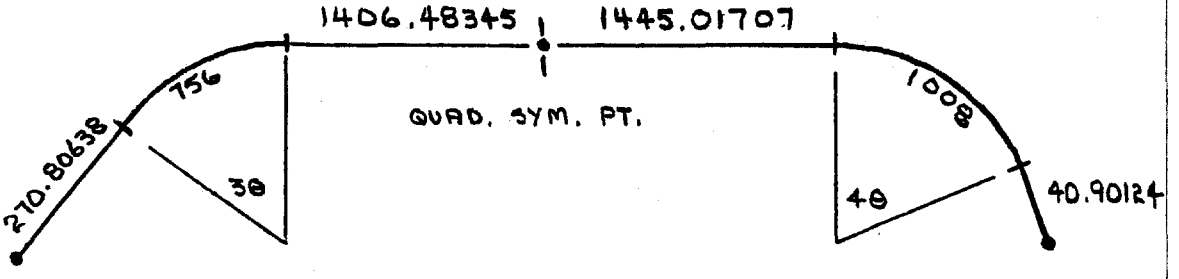

"HIGH BETA ST. SECTION (A and D)

USE THESE DIMENSIONS TO DESIGN PRECISION SURVEY

DOUBLER RELATIVE TO MAIN RING.

I USE THE SAME GROUP CENTERS FOR DOUBLER AND MAIN RING.

ROTATE DOUBLER NORMAL CELL GROUPS .4298 mrad. C.C.W. THEN

ALL NORMAL CELLS HAVE SAME RELATION
ADJUST R FOR SAME PATH.

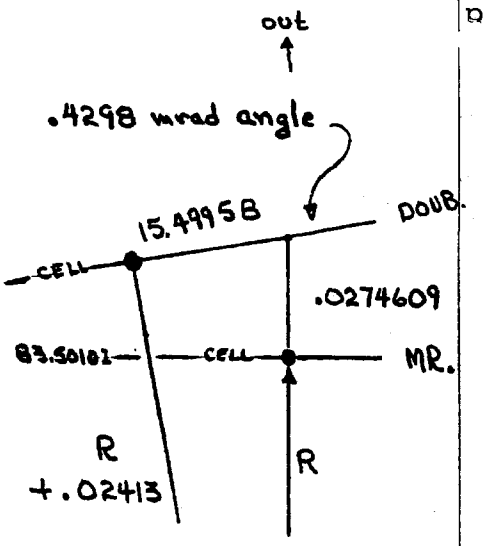

AFTER ADJUSTING FOR CLOSURE
THE QUAD SYM. PT'S ARE:

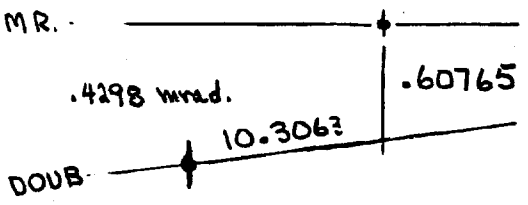

REGULAR LONG. ST. SECTION

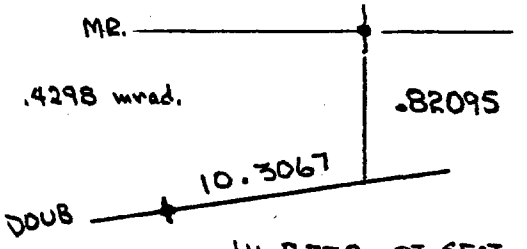

HI-BETA ST. SECT.

IN THE ARCS THE RELATION VARIES.

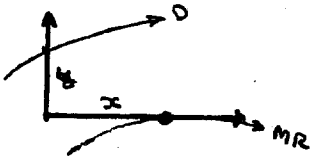

TABLES FOR INTERVALS OF $\theta/2$

NORMAL CELLS

$\times\theta$	x	y	dipoles
0	-17.500	.0558	
	-17.000	.0400	#2
1	-16.500	.0261	
	-16.000	.0143	#3
2	-15.500	.0046	
	-15.000	-.0032	#4
3	-14.500	-.0089	
	-14.000	-.0126	#5
4	-13.500	-.0142	

MED. ST. SECT.

θ	x	y (pos. D outside MR.)	dipoles
0	-31.997	.2653	
	-31.498	.1906	#4
1	-30.998	.1180	
	-30.499	.0473	#5
2	-29.999	-.0213	

REGULAR LONG S.S.

upstream

	θ	x	y
#3	0	-70.435	.1410
		-69.935	-.0898
	1	-69.434	-.3185
#4		-68.932	-.5451
	2	-68.430	-.7698
#5		-67.926	-.9924
	3	-67.421	-1.2130

Station (48)

θ	x	y	
0	-15.520	.0062	
	-15.020	-.0017	#2
1	-14.520	-.0075	
	-14.020	-.0112	3
2	-13.520	-.0130	
	-13.020	-.0127	4
3	-12.520	-.0103	
	-12.020	-.0060	5
4	-11.520	.0004	

Station (11)

HI-BETA ST. SECT

upstream

	x	y
0	-79.194	.1372
	-78.694	-.1291
1	-78.193	-.3933
	-77.691	-.6555
2	-77.188	-.9157
	-76.684	-1.1739
3	-76.178	-1.4300

#(48)

	x	y	
0	-8.954	-.2043	
	-8.453	-.1855	#2
1	-7.942	-.1646	
	-7.451	-.1417	#3
2	-6.951	-.1168	
	-6.450	-.0898	#4
3	-5.950	-.0608	
	-5.450	-.0298	#5
4	-4.950	.0033	

#(11)

DOUBLER LOCATION from MAIN RING.

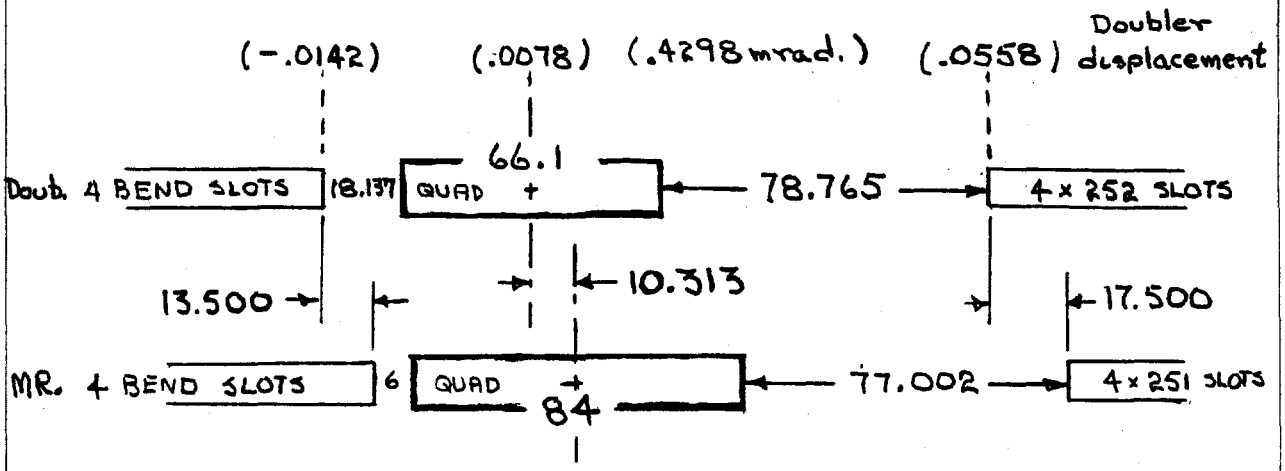

NORMAL LATTICE CELL.

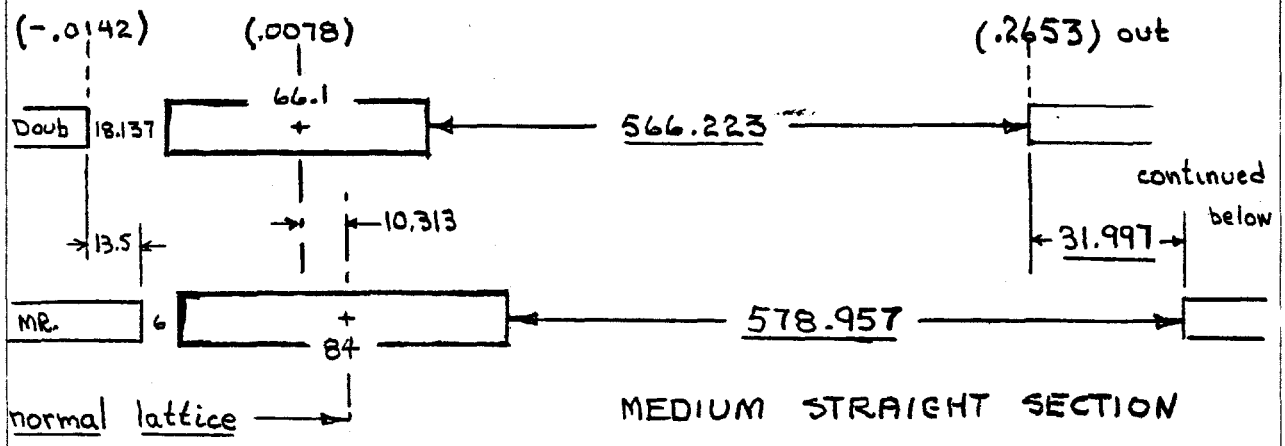

MEDIUM STRAIGHT SECTION

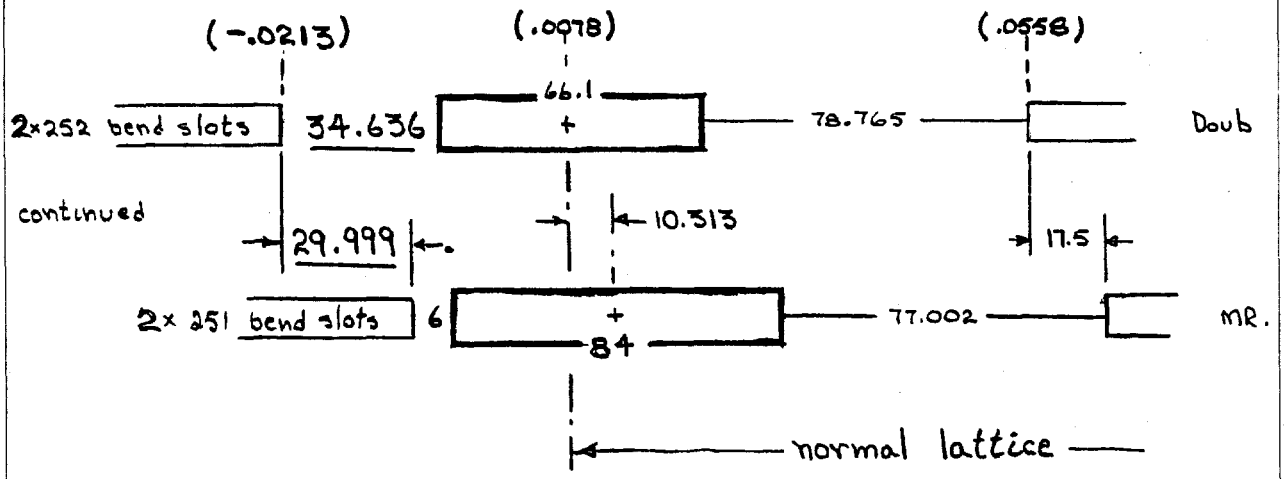

JHL MAR. '81

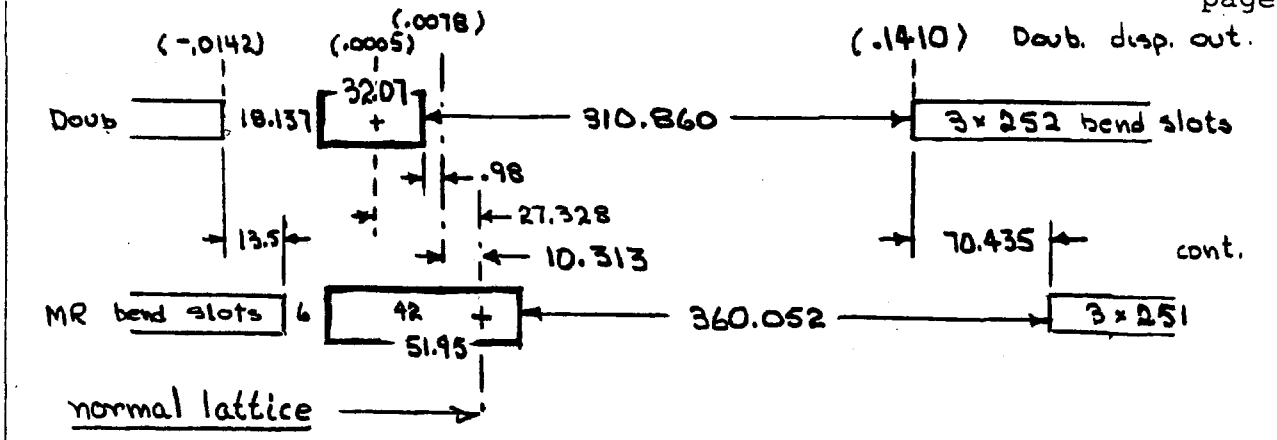

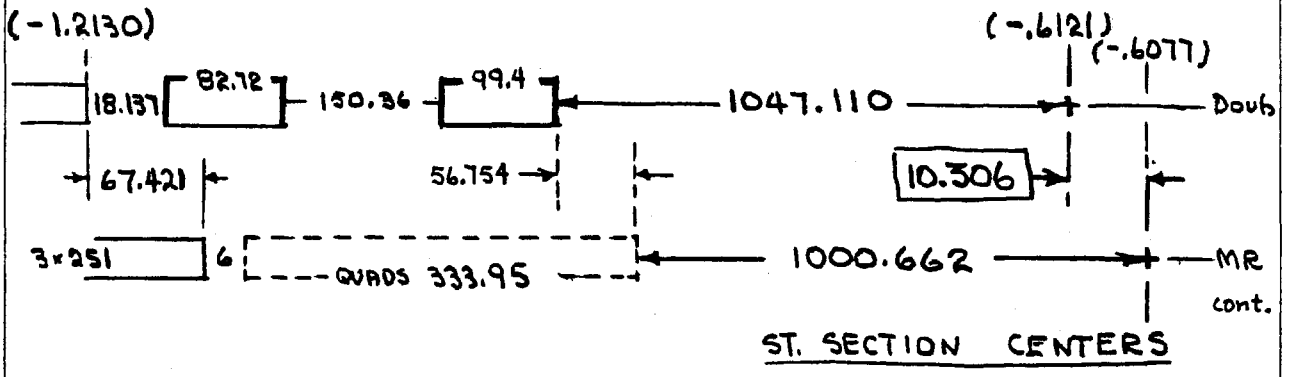

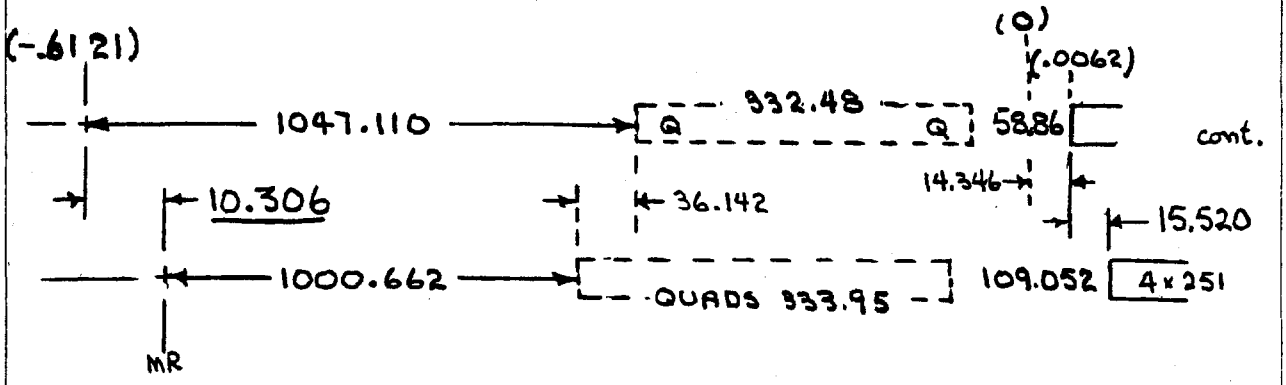

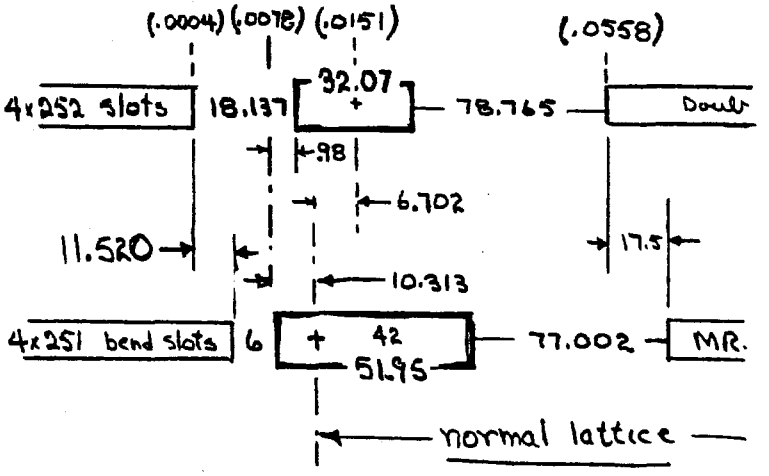

REGULAR

LONG St. SECTION

(B, C, E, F)

SSR MAR. '81

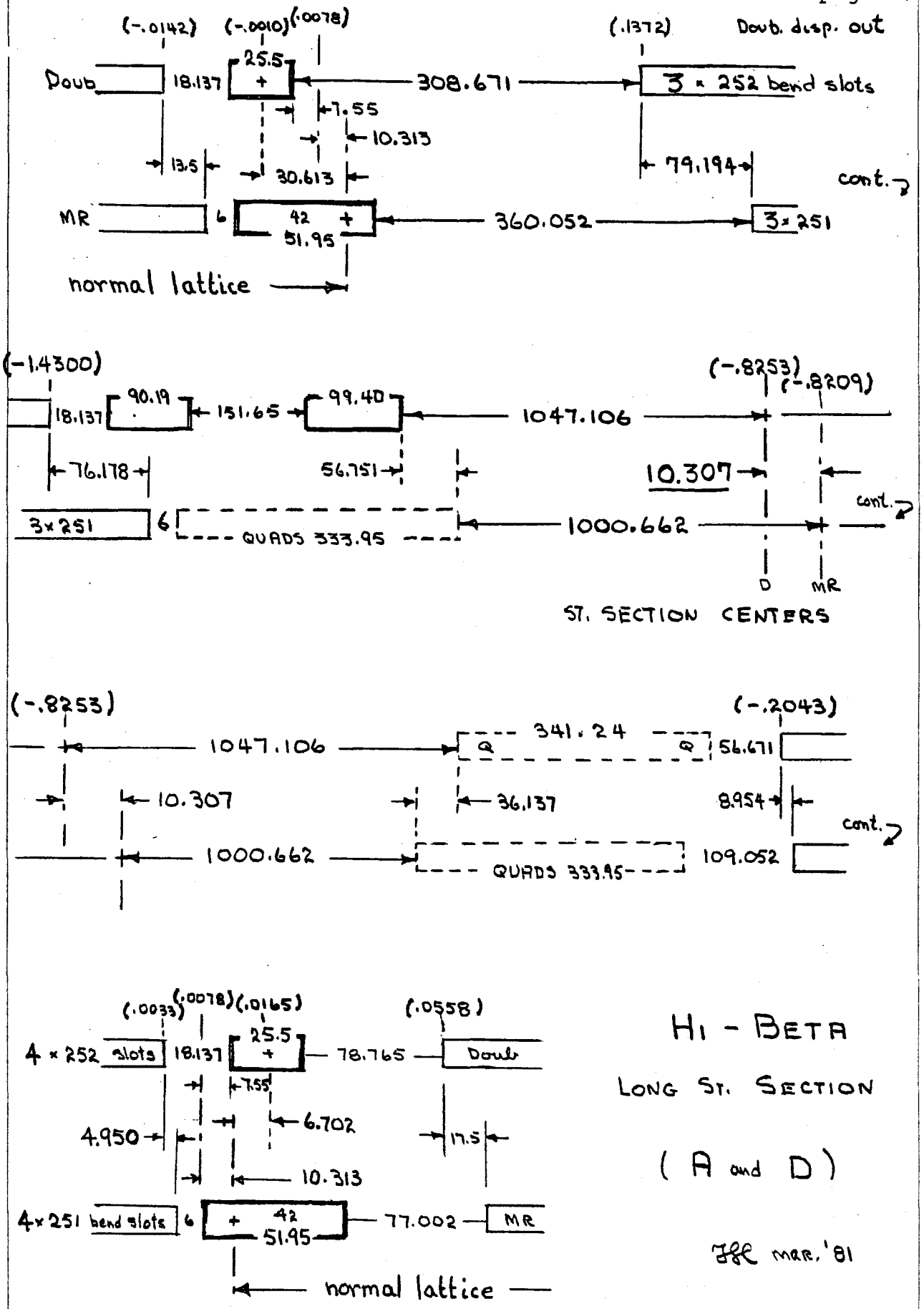
(-.0142)
(-.0010)
(.0078)
(.1372)
Doub. disp. out
Doub
18.137
25.5
308.671
3 × 252 bend slots
7.55
10.313
13.5
30.613
79.194
cont.
MR
6
42
51.95
360.052
3×251
normal lattice
(-1.4300)
(-.8253)
(-.8209)
18.137
90.19
151.65
99.40
1047.106
76.178
56.751
10.307
cont.
3×251
6
QUADS 333.95
1000.662
D
MR
ST. SECTION CENTERS
(-.8253)
(-.2043)
1047.106
341.24
Q
Q
56.671
10.307
36.137
8.954
cont.
1000.662
QUADS 333.95
109.052
(.0033)
(.0078)
(.0165)
(.0558)
4 × 252 slots
18.137
25.5
78.765
Doub
7.55
4.950
6.702
17.5
10.313
4×251 bend slots
6
42
51.95
77.002
MR
normal lattice
HI - BETA
LONG ST. SECTION
(A and D)
FHC MAR. '81