Fermilab

TM-994
2701.000
September 1980

PROPERTIES AND METHODS OF LEAD/TIN SPLICES FOR SUPERCONDUCTORS

M.T. Mruzek

Economies of construction have made it necessary to use many short lengths of superconducting braid for the 30" Bubble Chamber Coil Conversion. During the winding phase for the coil approximately 30 splices will be required. The high field, cryogenic conditions, and the generally bad condition of the wire require special consideration of the superconducting splices.

The wire being used is the same wire in the Chicago Cyclotron magnet. The dimensions are approximately 0.091" x 0.183". The wire has been pre-tinned with 50-50 Pb/Sn solder, and also has a copper core 0.037" x 0.128". There are 6 energy doubler strands and 8 copper strands wound on the central copper core. Chemical etching of a sample piece of wire has confirmed this Cu/SC ratio of 9.8.

The large number of short pieces has determined the physical configuration of the splices. Since making splices only at the coil layer-to-layer transitions would be extremely wasteful of wire, the splices will be made edge to edge. Figure #1 depicts the general appearance of the splice.

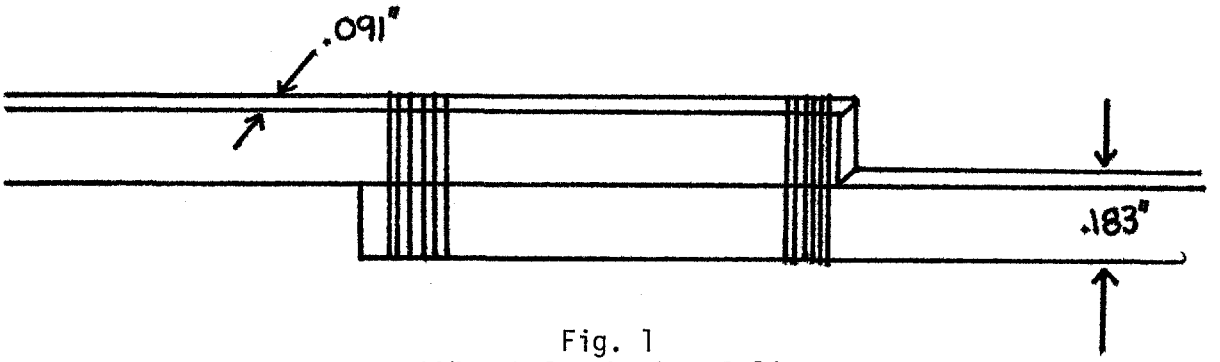

Fig. 1
30" Bubble Chamber Splice

The significant variables which can be controlled for a successful splice are: 1) the composition of the solder, 2) the diameter, quantity and core of the solder, 3) the type of flux used on the braid, 4) the length of the splice and 5) the possible inclusion of reinforcement bands on the splice. A successful splice is one which meets the requirements of 1) electrical resistivity, 2) mechanical strength and 3) ease of fabrication.

Solder Selection Overview

The wire has been pre-tinned with a 50% lead, 50% tin solder. This composition has a solidus of 183°C and a liquidus of 212°C. It is, therefore, desirable to use a solder for the joint which has a working temperature approximately in this range, and one which is chemically compatible with lead and tin. While the shear strength of the lead/tin solders does vary somewhat, the variances in ductility at cryogenic temperatures and wettability (a measure of the ease in obtaining a uniform joint) are larger.

At approximately 13°C pure tin has been observed to have a phase transformation, sometimes called gray tin. The tin becomes a powder below 13°C, with sometimes catastrophic results. The literature cites the use of a small amount of antimony as a preventive alloy, however, the antimony has a detrimental effect on the wettability. A leading solder manufacturer, Kester, claims their laboratory has never actually seen a gray tin transformation, and only add a minimum of antimony to satisfy a government specification. Bismuth has also been mentioned as a preventative alloying element, but no literature can be found describing its effectiveness.

The composition of the solder also has an effect on its corrosion properties. A mixture of tin and lead has good corrosion resistance because the elements form a protective oxide, also the electromotive potentials of tin and lead are + 0.14 and + 0.13, respectively, compared to hydrogen.

The condition of the damaged wire presents two rigorous constraints on the solder. The new wire has a 50-50 Sn/Pb coating, hence any solder used will be diluted to some extent, meaning its properties will be altered. The dirty wire most likely will need to be wire brushed, down to bare copper, for a splice. Therefore, the wetting power of the splices' solder must be high.

In summary, the ductility of lead/tin solders increases with an increase in the amount of lead. High lead is also desirable because of the possible transformation of tin. Unfortunately, the strength and wetting power decrease with increasing lead content and the addition of the preventative alloy antimony further decreases the wettability. The

working temperature of the tin/lead solders is not important until the lead content approaches 95%, at that point the liquidus temperature of the alloy is nearly 100°C higher than the 50/50 mixture.

Fluxes

Fluxes are used to increase the ease with which a joint can be fabricated. A general view of their action is to remove the oxide film on the metals being soldered. Naturally this involves a corrosive action. However, this same corrosive action can continue after the splice has been made, and eventually weaken or destroy the joint. Non-corrosive fluxes also exist. These fluxes are a mixture of organic resins and organic acids such as abietic acid. The most important class of fluxes for superconducting applications are the activated resin fluxes. These fluxes in general contain propiertary organic additives which are designed to increase the fluxing action.

Experiments on splices for the 30" Bubble Chamber have yielded several relevant facts. The splicing fixture is constructed of 6061 aluminum. The wires to be spliced are placed in a slot machined along the top of the fixture. The use of liquid corrosive fluxes prevents good splicing, because the corrosive flux attacks the aluminum and small particulates of aluminum contaminate the solder. Aluminum has a notoriously detrimental effect on the soldering action; in fact, it was impossible to obtain any type of bond at all using the corrosive liquid fluxes.

The mildly corrosive zinc chloride paste fluxes do not attack the aluminum fixture to any great extent. Using this flux it was possible to obtain very good wetting action, even with the higher lead content solders.

At first it was thought possible to remove the flux residue with a thorough washing, because zinc chloride is extremely soluble in water. It was later learned that the melting point of pure zinc chloride is high enough to prevent its complete liquidifaction at normal soldering temperatures. This means the zinc chloride salt crystals will remain undissolved in the solder mixture, with its corrosive ability intact.

The Kester Company in Chicago, Illinois produces a line of activated rosin core solders in various diameters and compositions. The same activated rosin flux is also available in a paste form. The trade name of the flux is "SP 44". Naturally it is desirable to use the same flux in the solder's core which is applied to the wire itself. The advantage of using the rosin core solder relates to the mechanics of splicing. The heat-up cycle of the fixture will burn-off some of the flux which was brushed on. The strip of solder sandwiched between the two superconductors will melt just when the flux is needed, to assure good solder flow. The "SP 44" flux was found to produce a good non-corrosive solder joint for the intermediate composition lead/tin solders. However, the flux didn't produce a good solder joint for the high lead content solders. The effectiveness of the flux was an important consideration in the final solder selection.

Experimental Description

The tensile tests on the solders and splices were done on a fixture built specifically for the tests. Figure 2 is a mechanical drawing of the fixture. The ends used to hold the specimen were simple U-hooks. The force and deflection were transmitted with a 1/2" dia., NF 20 threaded rod. The load output was monitored with a BLH 0-1,000 lb load cell and a

CRYOGENIC TENSILE TEST FIXTURE

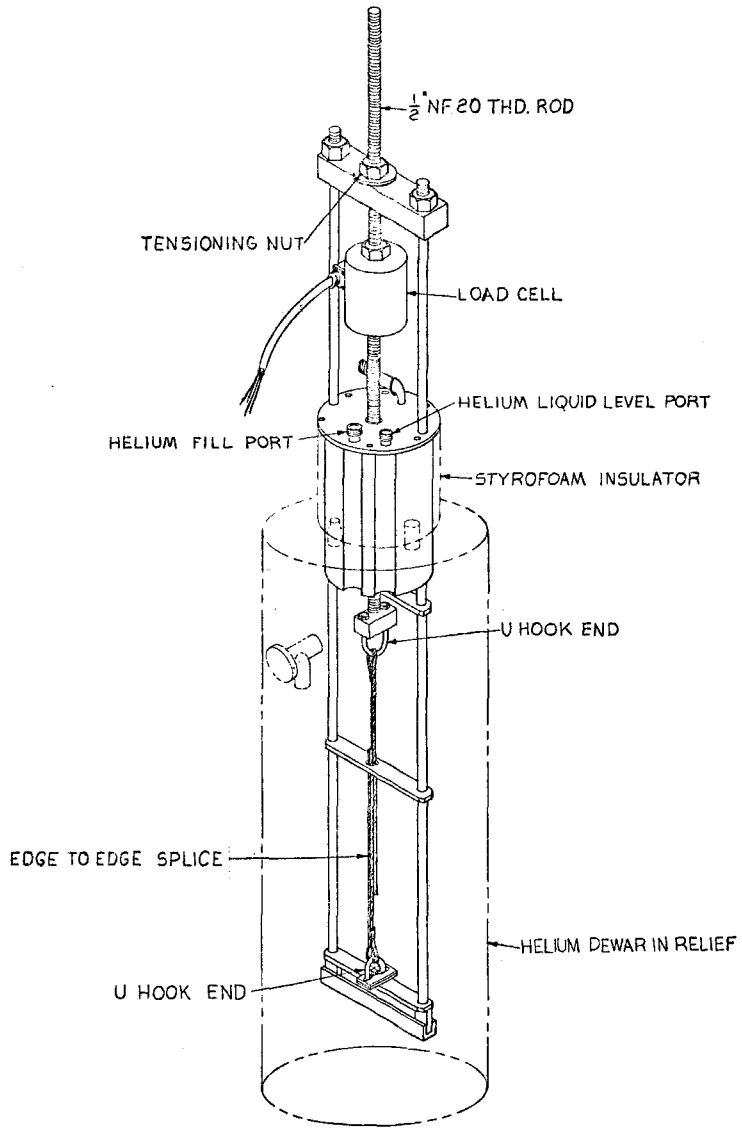

REV.	DESCRIPTION	DRAWN / APPD.	DATE / DATE

ITEM NO.	PART NO.	DESCRIPTION OR SIZE	QTY. REQ.
		PARTS LIST	

UNLESS OTHERWISE SPECIFIED — FRACTIONS ± / DECIMALS ± / ANGLES ±

1. BREAK ALL SHARP EDGES 1/64 MAX.
2. DO NOT SCALE DWG.
3. DIMENSIONING IN ACCORD WITH ANSI Y14.5 STD.

MAX. ALL MACHINED SURFACES

ORIGINATOR: M. MALLEX
DRAWN: P.C. CALAHAN 8-22-80
CHECKED
APPROVED
USED ON
MATERIAL-

FERMI NATIONAL ACCELERATOR LABORATORY
UNITED STATES DEPARTMENT OF ENERGY

SCALE | FILMED | DRAWING NUMBER | REV.

FIGURE 2

model 450A digital read-out. The actual force was provided by using a wrench to turn a nut on the 1/2" NF 20 rod. By counting the number of nut turns, the specimen's deflection was known.

Because the bottom end of the specimen was held by two stainless steel tubes attached to the dewar lid, the test fixture deflection introduced an error term. The error term is a result of the test fixture's own modulus. It can easily be taken into account by placing a very rigid specimen between the two hooks. By measuring the force (with the load cell) versus the deflection (from the number of turns), the fixture's own modulus can be calculated. The error term corrections were generally less than 10%.

The solder samples were fabricated with solid wire provided directly by the manufacturer. The diameter of the wire is 0.125". The specimens were made by winding the wire around a small mandrel to form an eyelet for the 1/4" U-hooks. Then the ends were quickly dipped in a solder bath to congeal the individual turns. Afterwards, a 1/4" hole was drilled through each end. Before testing, the specimens were suspended in boiling water for 20 hours to remove the effects of any prior work hardening. The specimens averaged about 4 inches in length.

Unfortunately, the method of specimen preparation introduced an unforeseen testing difficulty. When the solder eyelets were dipped in the solder pot, it was inevitable that some of the solder would flow on the central wire portion being tested. When the specimen was loaded under tension, the same solder bath-solder wire interface would fail in shear. The wire would "pull-out" of its socket slightly in an abrupt manner. It was usually accompanied by a large cracking noise. The mechanism was so

abrupt it oftentimes initiated premature specimen failure. Fortunately, the effect generally occured after plastic deformation was in progress. Therefore, the modulus and yield point were still well defined. The ultimate load at all failures were approximately equal also, so the data showed little scatter. The only data which was greatly affected by this mechanism was the elongation at failure.

The stress-strain curve for the solders clearly showed when the eyelets pulled free. It was marked by a sharp decrease in load with no increase in strain. Many samples failed at this point, although some continued past it. In reporting solder elongation, I have reported the maximum elongation observed for each solder composition from a sampling of three specimens. I have subtracted the elongation caused by the interface failure. All specimens were strained at a rate of 0.1 inches per minute.

The splices were tested on the same fixture. A high load test fixture modulus was used to reduce the data. All splices were tested at liquid nitrogen temperature. The strain rate was approximately 1/4" per minute. The following solder data is suspect and should be verified before basing a design on the results.*

Mechanical Properties of Lead/Tin Solders at 4.2K

The solder testing program for the 30" Bubble Chamber Coil Conversion has yielded data on the properties of some common tin-lead solders. The three solders tested are 40% tin-60% lead, 50% tin-50% lead, and 60% tin-40% lead. All three solders were tested in a bath of liquid helium with an apparatus specifically built for the test.

*M.T. Mruzek 3/2/83

Complete details of the set-up, including a description of the samples, and the methods of calibration can be found in the experimental section of this report. Suffice it to say that the data reported represents the stress-strain data of the solders. The mechanical data this report contains and the order it is presented is 1) elastic modulus, 2) yield strength, 3) ultimate strength and 4) total elongation at failure.

1. Elastic Modulus

The average values of elastic moduli are presented in Table 1.

Table 1

	40% lead	50% lead	60% lead
Modulus, psi	2.00×10^6 psi	1.49×10^6 psi	1.19×10^6 psi
Max. % deviation from average	0%	4.7%	17.6%

2. Yield Strength

The yield strength is defined as the stress which produces 0.2% strain. It can easily be determined by using a graphical offset method. The yield points of the solders tested are listed in Table 2.

Table 2

	40% lead	50% lead	60% lead
Average yield, psi	21,800	19,025	13,767
Max. % deviation from average	8.3%	7.4%	2.7%

3. The Ultimate Stress

The ultimate stress is defined as that stress which exists in the material at failure. In general, most materials reach a fairly constant plateau in the stress-strain curve. Lead-tin solders do exhibit this plateau. Table 3 presents the values of ultimate stress found in this investigation.

Table 3

	40% lead	50% lead	60% lead
Average ultimate, psi	26,700	25,550	23,030
Max. % deviation from average	1.1%	3.5%	4.3%

4. Elongation

Elongation is the strain which exists at failure. It is generally reported in percent. The elongation was measured two ways in this experiment when possible. The first method was to measure the length of the specimen before and after failure. The second method used the fixture rod's deflection and a knowledge of the original length. As discussed in the experimental description, there was a mechanism for premature specimen failure due to the manner in which the samples were prepared. Therefore, the values reported are the maximum values observed, although it is possible the elongation may be greater. The values in Table 4 represent the average of the two methods for elongation measurement.

Table 4

	40% lead	50% lead	60% lead
Elongation (percent)	3.0%	9.5%	20.8%

Mechanical Properties of Splices

To verify the conclusions reached about the cryogenic properties of different solders, approximately ten splices were tensile tested at liquid nitrogen temperatures. It would be inaccurate to report the data on stress-strain curves because there are ambiguities in using the braid's cross sectional area for the calculation of stress. Also, the strain until failure for a splice obviously depends on the length of the wire ends used for attachment to the fixture. However, it is still possible to reach several important conclusions by testing similar splices made with different solders.

The most important criterion for the mechanical integrity of splices is the mode of failure. Figure 3 illustrates how an edge to edge splice deforms under tension. Note how the solder is subjected to both tension and shear.

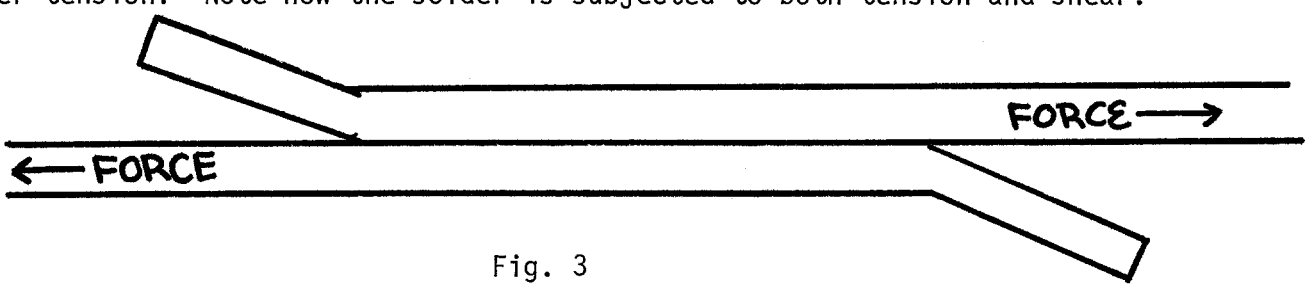

Fig. 3

The combination of loadings produce a peeling effect, which in turn causes a large force where the wires are separating. Almost every splice tested which was made in this manner failed at the solder boundary. To alleviate this problem a unique solution has been developed. Reinforcement bands of thin copper wire are wound onto the splice and soldered in place. The improved splice is depicted in Figure 4. The banding greatly improves the strength of the splice.

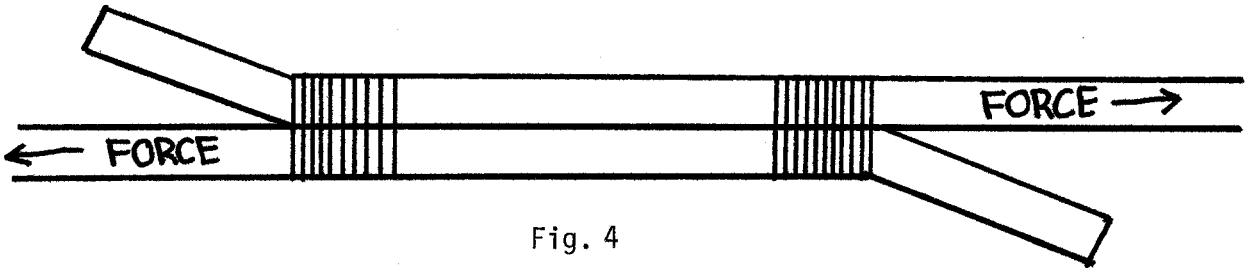

Fig. 4

The results of the splice testing program are presented in Table 5.

Table 5

Splice Properties at LN_2 Temperatures

Solder Sn/Pb	Length inches	Bands	Failure Load lbs	Failure Mode
*60/40	9-3/8"	Yes	738	Wire
60/40	9-3/8"	No	697	Solder
50/50	9-1/2"	No	774	Wire and Solder
50/50	3-7/8"	No	340	Solder
50/50	7-1/2"	No	729	----
*50/50	4"	Yes	752	Wire
40/60	9-3/8"	No	761	Solder
*40/60	9-1/2"	No	755	Wire

*Successful splices

When a splice fails in the wire portion of joint, it is considered successful. Note that all banded joints were successful. It is, therefore, critical that the 30" Bubble Chamber splices be banded.

All of the splices tested had an overall length of approximately 15". A rough indication of splice ductility is the elongation of the entire sample under tension. For a comparison the splices need to be geometrically similar and must fail in the same mode. Only two data points are available, but they indicate the same general trend. The 40% lead splice had a total elongation of 0.75%, while the 60% lead splice elongated 1.05". It is difficult to accurately calculate how much of the elongation is due to the splice's wire ends, which are necessary for testing.

Splicing Fixture Description

The genesis for the 30" Bubble Chamber splicing fixture came from the report, Development Program for MHD Power Generation. This study describes a fixture for manufacturing lap joints in superconducting braid. Figure 5 is a mechanical drawing of our splicing fixture. The 30" fixture is electrically heated with 5 heaters per section. Each heater is rated at 415 watts at 230 volts. The fixture is constructed of 6061 aluminum. Temperatures in the fixture are monitored with an Omega Model 175 digital thermocouple readout. The heater power is controlled with a RFL Industries 30 amp, 230 volt temperature controller.

There are several important features which should not be overlooked when designing a splicing fixture. The fixture should be built to make the splice length easily adjustable. The 30" fixture has pins and notches to connect together the identical 9-1/2" long sections. Provision must be made for removing the splice easily, otherwise the risk exists of inducing unnecessary stresses in the splice. The 30" fixture has a removable square bar which runs along the length of the fixture's slot. While splicing is in progress, the bar is securely bolted to the fixture. Afterwards, the bar can be removed using four bolts which are screwed down to lift it.

The thermal inertia of the splicing fixture is fairly large. Although this is not desirable in terms of the warm-up time, it is desirable for other reasons. The fixture's large size and good thermal conductivity assure the temperature distribution is uniform along the entire splice length. The fixture's size and symmetry also simplifies accurate measurement of the splice's temperature at all times.

REV.	DESCRIPTION	DRAWN / APPD.	DATE / DATE
1	WAS 10"		
2	FLARGED SLOT (WAS .090)		

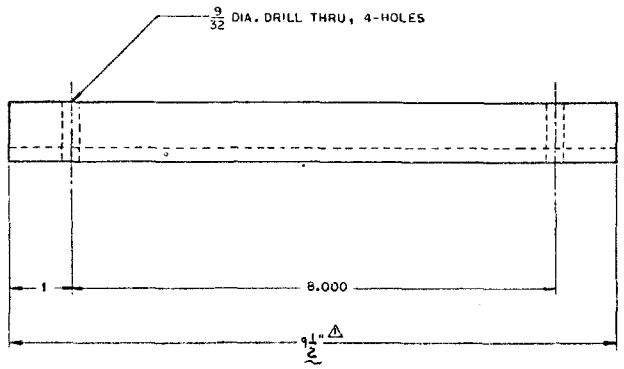

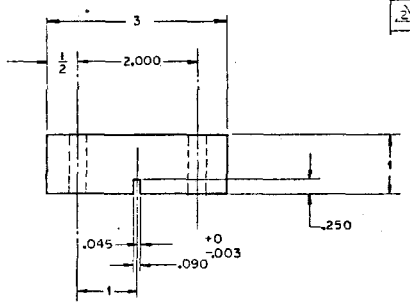

ITEM 2

ITEM 1

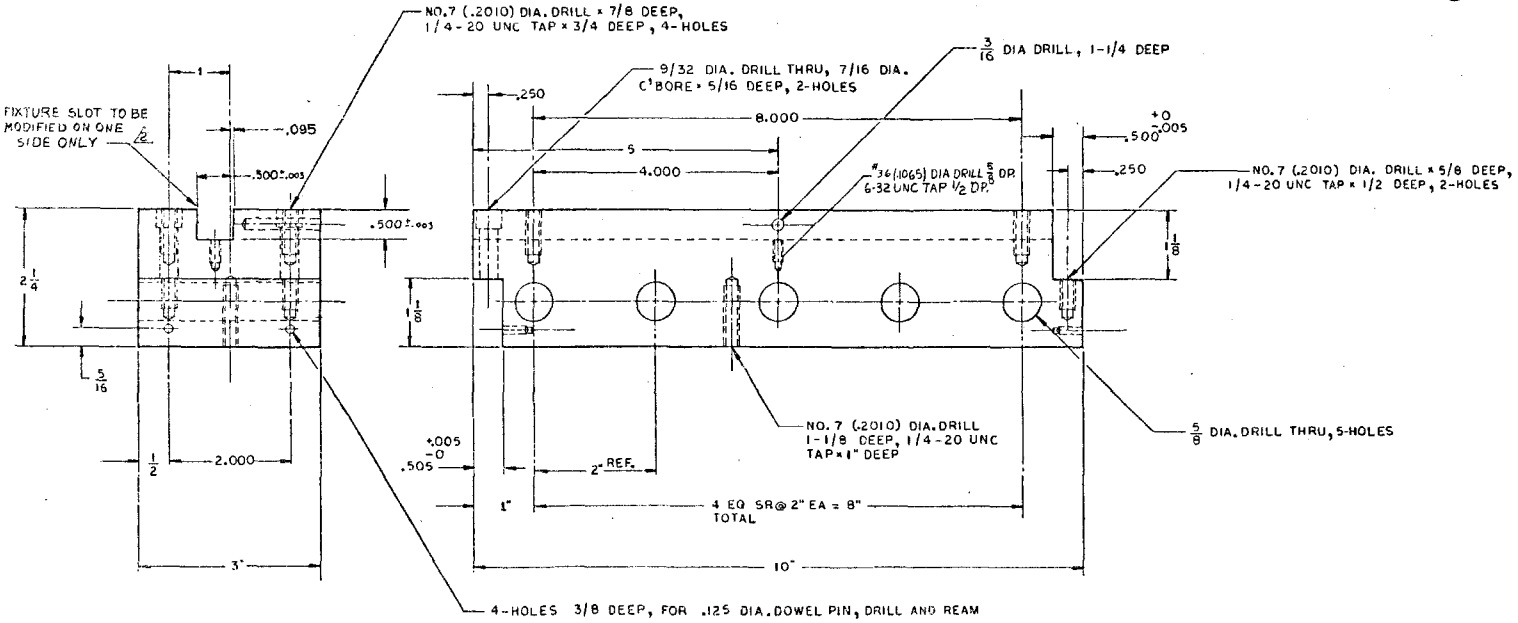

ITEM NO.	PART NO.	DESCRIPTION OR SIZE	QTY. REQ.

PARTS LIST

UNLESS OTHERWISE SPECIFIED			ORIGINATOR	[illegible]	
FRACTIONS	DECIMALS	ANGLES	DRAWN	G. GROZIS	6-4-80
± 1/64	± .005	±	CHECKED		
1. BREAK ALL SHARP EDGES 1/64 MAX.			APPROVED		
2. DO NOT SCALE DWG.			USED ON		
3. DIMENSIONING IN ACCORD WITH ANSI Y14.5 STD'S.			MATERIAL: ALUMINUM 6061-T6		
MAX. ALL MACHINED SURFACES					

FERMI NATIONAL ACCELERATOR LABORATORY
UNITED STATES DEPARTMENT OF ENERGY

SUPERCONDUCTING WIRE SPLICER-FIXTURE

SCALE	FILMED	DRAWING NUMBER	REV.
FULL			

Procedure for Production of Splices

The final procedure for the production of the superconducting wire splices evolved after a great deal of experimentation. The steps necessary and the reasons why are listed in order below:

1. Clean the fixture with Acetone and paper towels to prevent contaminating the solder.
2. Use scotchbrite to apply Kester "44" activated resin flux on the wire's entire splicing length, including approximately six inches extra on each end. The scotchbrite removes the oxide layers on the wire, and the paste flux prevents the air from producing more oxides.
3. Insert the end of one wire into the slot on the top of the splicing fixture's base.
4. Measure and cut a length of 0.093" diameter 60% lead/40% tin solder which has the Kester SP"44" resin core. Place the solder in the slot,on the top of the wire.
5. Insert the other end of the wire to be spliced into the slot.
6. Gently place the top of the fixture into place. Loosely tighten the bolts on top.
7. Carefully turn on the heaters, with the dial set at 70% of capacity, and watch the digital temperature readout. Thereafter, slowly increase the dial setting while watching the temperature. The temperature should increase at the rate of about 1 degree centigrade every 5 secs.
8. When the temperature reaches 250°C, turn off the heater power and immediately tighten down the bolts on the top of the fixture.
9. Allow the splicing fixture to cool down to approximately 150°C before removing the splice.

10. Use a vise to hold the splice firmly about 2 inches from where it begins. Then neatly wrap gauge 31 solid copper wire around the wires to form a reinforcing band about 1" long and 1/2" from the end. Tie the two ends of the wire together.
11. Apply Kester SP"44" flux to the copper wire with Scotchbrite. Then heat the banding while applying 60% lead/40% tin resin core solder, until the banding becomes saturated with solder.
12. Make a similar reinforcement band on the other end of the splice.
13. Clean the entire splice using the flux solvent.

Conclusions

1. The solder composition which will a) produce a good solder joint with the activated rosin fluxes, b) is readily available in cored form, c) is readily available in a convenient size and d) has good strength and ductility at $4.2^{o}K$ is 60% lead/40% tin.
2. The activated rosin flux which is not corrosive and produces good uniform joints is Kester's "SP 44".
3. The splice length of 9.5" is mechanically sound, if copper wire reinforcement bands are present.
4. The splice can be fabricated using the specially designed fixture in approximately 30 minutes

Acknowledgments

I would personally like to thank Mineo Kobayashi for his invaluable assistance with this project.

References

Soldering Manual, prepared by the American Welding Society, 1959. Published by the AWS, NY, NY.

Solders and Soldering, Manko, Harvard H., McGraw-Hill Book Company, New York, 1964.

Development Program for MHD Power Generation, Vol. 4, Superconducting Magnet Study, Final Report issued Nov. 1977, Contract No. EX-76-C-01-2015, Avco-Everett Research Lab, Inc., Everett, Mass. by A.M. Hatch, R.C. Beals and A.J. Sofia.

Superconductor Joining Methods for Large CTR Magnets, Final Report, Contract: 22X-69944V for Union Carbide Corporation, Contractor: Intermagnetics General Corp., by P.M. Rackov, C.D. Henning, October 14, 1975.

Selecting Solders for Low-Temperature Service, A.B. Kaufman, Materials in Design Engineering, November 1958, pp 114-115.

The Low Temperature Properties of Tin and Tin-Lead Alloys, Kalish H.S., American Institute of Mining and Metallurgical Engineers, Vol. 15, 1948 Technical Publication 2442, pp. 1-20.

Design Criteria for Solders in Cryogenic Environments, Christian J.L. Electro-Technology, June 1963, pp. 109-112.