TM-990
2750.000
September, 1980

THE EFFECTS OF POTTING ON TRAINING AND QUENCH PROPAGATION IN A LARGE STORED ENERGY SUPERCONDUCTING DIPOLE COIL

B. Cox, P. H. Garbincius, J. Guerra,
P. O. Mazur, J. A. Satti, E. B. Tilles

Fermilab

ABSTRACT

A superconducting racetrack dipole coil was constructed to compare directly training and quench behavior in potted and non-potted coils. The stored energy of this coil was 175 KJoules at the conductor's short sample limit of 238 Amp with a peak field on the coil of 7.6 Tesla. The outward magnetic forces were restrained by rows of tie rods between side plates. Comparisons of training behavior were made for both steel and aluminum tie rods. Helium flow was provided by channels in the fiberglass cable tape allowing 1/4 of the conductor direct access to the helium supply.

After training the coil to 90% of short sample limit, the tie rods were relaxed and the entire coil was vacuum impregnated with a standard clear magnet epoxy. After potting, the previous tie rod preloads were re-established. This resulted in a much shallower training curve, and required retraining after thermal cycling. The unpotted coil showed no evidence of internal quench propagation below 80% short sample, whereas the potted coil exhibited good quench propagation and energy dissipation at all currents, simplifying protection strategies.

We conclude that fully impregnated coils of this design are not practical for thermally cycled magnets designed to operate above 80% of short sample limit.

For Presentation
of the

1980 Applied Superconducting Conference

September 29 to October 2, 1980

Santa Fe, New Mexico

THE EFFECTS OF POTTING ON TRAINING AND QUENCH PROPAGATION IN A LARGE STORED ENERGY SUPERCONDUCTING DIPOLE COIL

B. Cox, P. H. Garbincius, J. Guerra,
P. O. Mazur, J. A. Satti, E. B. Tilles
Fermilab*, Batavia, Illinois 60510

Summary

A superconducting racetrack dipole coil was constructed to compare directly training and quench behavior in potted and non-potted coils. The stored energy of this coil was 175 KJoules at the conductor's short sample limit of 238 Amp with a peak field in the coil of 7.6 Tesla. The outward magnetic forces were restrained by rows of tie rods between side plates. Comparisons of training behavior were made for both steel and aluminum tie rods. Helium flow was provided by channels in the fiberglass cable tape allowing one-quarter of the conductor surface direct access to the helium supply.

After training the coil to 90% of short sample limit, the tie rods were relaxed and the entire coil was vacuum impregnated with a standard clear magnet epoxy. After potting, the previous tie rod preloads were re-established. This resulted in a shallower training curve, and required retraining after thermal cycling. The unpotted coil showed no evidence of internal quench propagation below 80% of short sample, whereas the potted coil exhibited good quench propagation and energy dissipation at all currents, simplifying protection strategies.

We conclude that fully impregnated coils of this design are not practical for thermally cycled magnets designed to operate above 80% of short sample limit.

Coil Construction

A flat racetrack superconducting coil was wound around a stainless steel form producing the coil cross section of Figure 1. The superconductor was fabricated into a cable consisting of 15 strands. Each strand was 0.040 inch in diameter with a copper to NbTi superconductor ratio of 3 to 1, and was individually insulated with Nyform before cabling. The cable was spiral wrapped with a B-stage epoxy loaded glass tape of 0.007 inch thickness allowing helium channels to contact approximately one-quarter of the cable surface. The coils were arranged in eight double layer flat pancakes. After winding the cable at 75 lbs. tension and curing the B-stage epoxy, the individual strands of each double pancake were connected electrically in series. The eight pancake coils were then connected in series producing a low current magnet configuration. A similar scheme has been used in References 1 and 2. The outward magnetic forces were restrained by carbon steel

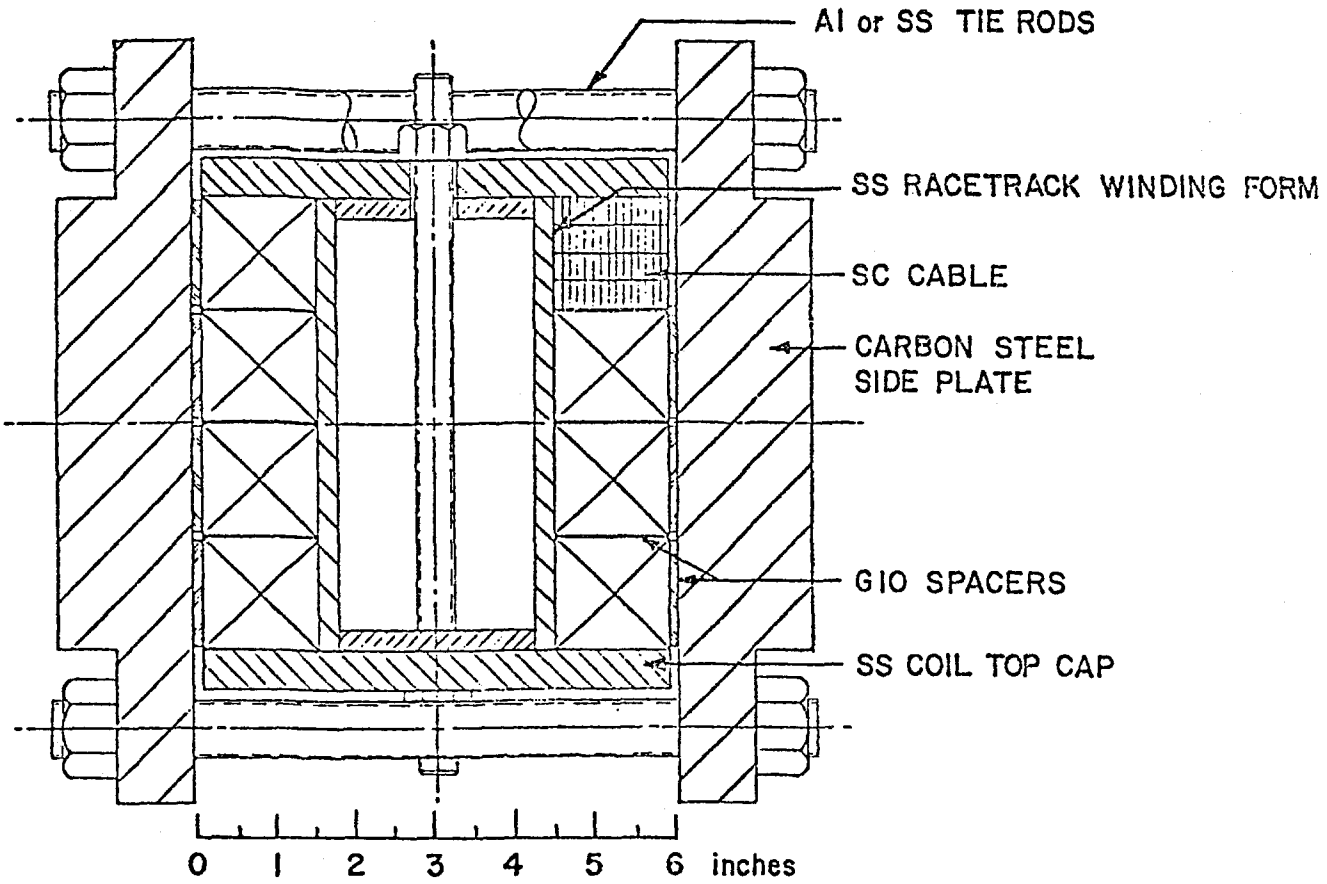

Fig. 1. Coil Cross Section

*Operated by Universities Research Association, Inc.
Under Contract with U. S. Department of Energy.

plates connected by 19 pairs of either stainless steel or aluminum tie rods. The maximum field point in the conductor package occurs on the magnetic midplane at the center of the end turn. The effects of saturation of the steel plates on the magnetic field distribution within the coil are negligible.

Coil Parameters

Configuration	Racetrack Dipole
Coil Length	36 inches
Number of Strand Turns	3600
Inductance	6 Henries
Average Short Sample Limit	238 Amp
Central Field	5.1 Tesla (at ss)
Maximum Field in Coil	7.6 Tesla (at ss)
Stored Energy	175 KJoules (at ss)

Compression and Training Behavior

The tie rods withstood the outward magnetic stress of the coil and also provided an inward preload on the conductor package. Both stainless steel and aluminum sets of 3/4"-10 NC threaded rods torqued to 50 ft-lbs. were employed for different tests. This produced a 630 psi room temperature preload on the coil.

Using measured properties of the coil package[2], an additional cooldown preload of 220 psi on the coil was calculated for the aluminum tie rods. The stainless steel rods however lost all preload under cooldown producing a 0.015" gap at the outer conductor surface.

The observed training behavior is shown in Figure 2. After initial tests with the stainless steel tie rods, the coil was relaxed and the rods were replaced with aluminum tie rods at the same preload. This gave an increase of approximately 20 Amps at corresponding training quench numbers.

At this point, the tie rods and side plates were removed, treated with mold release compound, and retorqued to the original preload using Belleville washers. The coil was vacuum impregnated using a clear, unfilled epoxy[3]. After curing, the Belleville washers were removed and the aluminum tie rods were reinstalled to original preload.

The training behavior of the potted coil showed a shallower initial slope than for the unpotted coils. 85% of short sample limit was reached after 50 quenches, as compared to 10 quenches for the unpotted structure. This shows the added quench stability of the open coil geometry. The potted coil attained essentially the short sample limit after 75 training quenches. However, on subsequent cooldowns, it required retraining from about the 85% level.

Quench Behavior and Protection

Superconducting magnets may be protected either by internal quench propagation or by external resistors to prevent damage during quenching. The external quench protection scheme employed is shown in Figure 3. Small

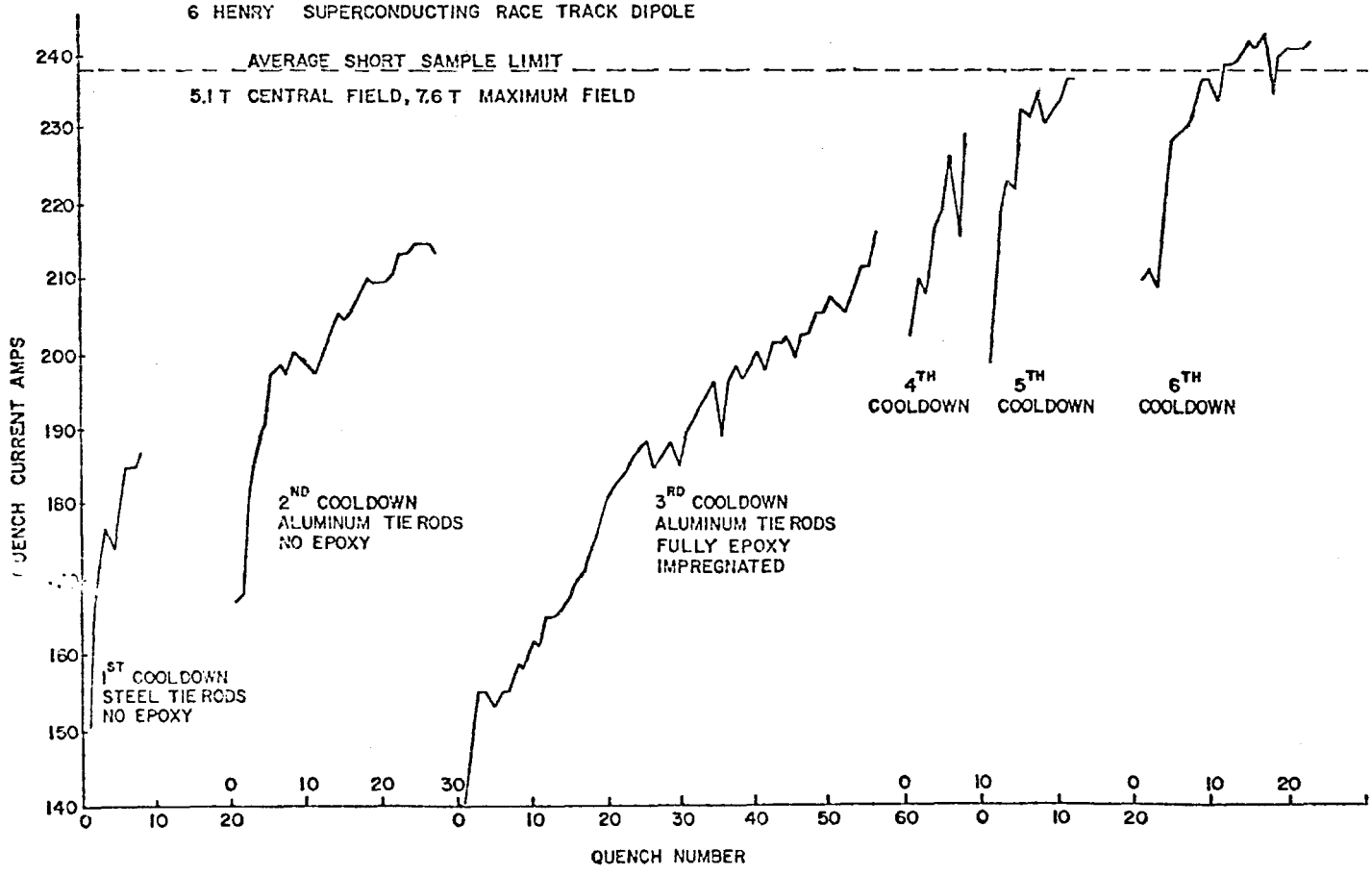

Fig. 2. Training Behavior

0.065 inch diameter uncooled copper safety leads connected the junctions between each double pancake coil with the external resistor string. After a quench is detected, the SCR switch is opened forcing the current to decay through the external resistors. The individual safety leads allow some current to be shunted around the quenched section of superconductor, thereby minimizing the temperature rise in the quenched section and reducing the chance of a burnout. During the quench tests, the number of safety leads and the values of the external resistors were varied. The quenches were initiated by spontaneous training quenches or by small stainless steel heaters placed on the coil ends. Estimates of the upper limit for the coil temperature in the quenched region were made using the theory of Reference 4 using the integral of the measured current squared over the time of the current decay.

The maximum temperature estimates during training quenches are shown in Figure 4. This used eight separate resistors totaling 2.56 ohms ($\tau = L/R_{ext} = 2.3$ sec). The maximum temperature was calculated for the quenched section. The unpotted coil exhibited little internal quench propagation below 190 Amps (80% ss). The dotted curve represents the maximum temperature expected where only the external resistors contribute to the current decay. Above 80% ss, the unpotted coil shows appreciable quench propagation, attaining an internal resistance of about 2 ohms at 2 seconds after the quench. The potted coil exhibits good internal quench propagation even at low currents, and agrees with the unpotted coil above 80% ss. The quench propagation threshold of 190 Amps corresponds to a heat transfer flux of 0.8-0.9 watts/cm^2 from the conductor surface to the liquid helium. This is larger than the maximum heat transfer coefficient for nucleate cooling stability as measured by Whetstone and Boom [5].

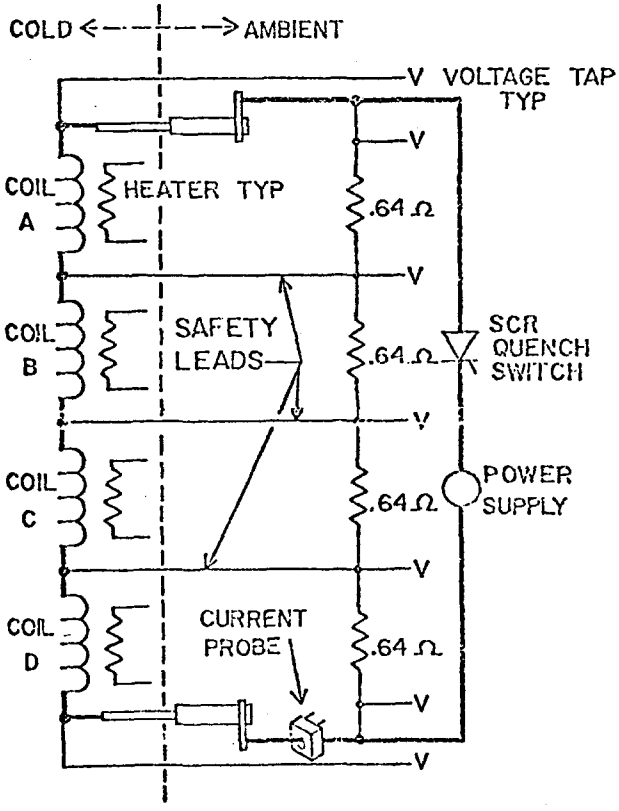

Fig. 3. External Quench Protection Scheme

The safety leads were removed and the coils were protected by a single variable external resistor. The maximum coil temperature behavior is shown in Figure 5 for both spontaneous and heater induced quenches at 90% of short sample. The total external resistance was gradually reduced leading to a slightly increasing maximum temperature. The resistors were completely removed and replaced by a diode for the potted coil. The maximum temperature was still quite low indicating that the potted coil will safely absorb its own total stored energy during quenching without external protection circuitry.

Conclusions

This study examined the effects of potting on the performance of superconducting magnets approximating the inductances of beamline and accelerator dipoles.

The high rate of internal quench propagation simplifies protection schemes for the potted coil at all excitations. A quench propagation threshold of 80% of short sample exists for the geometry allowing open helium flow. This was also observed for a large dipole of the type described in Reference 1. The external energy dump circuitry must provide protection at low excitations.

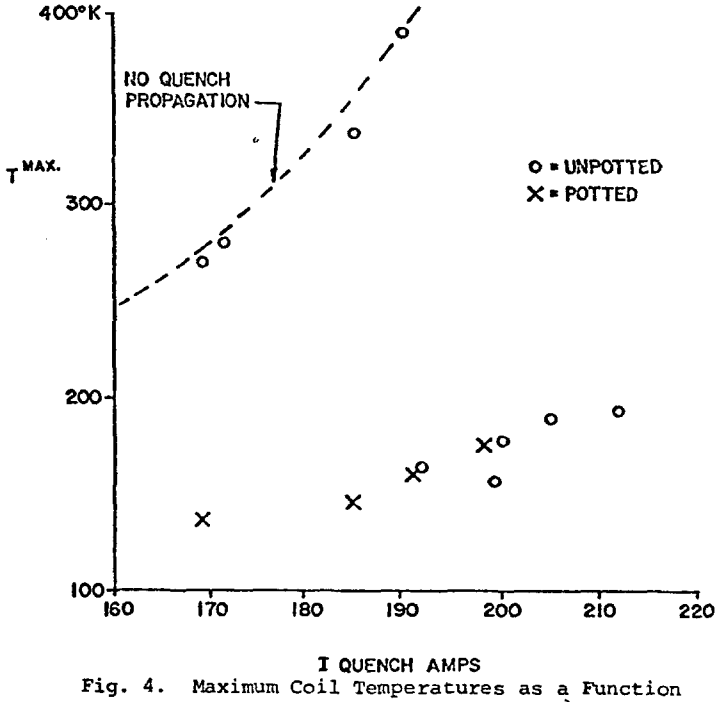

Fig. 4. Maximum Coil Temperatures as a Function of Current During Training Quenches

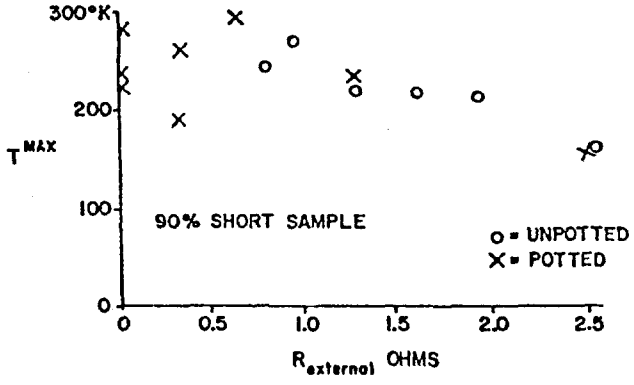

Fig. 5. Maximum Coil Temperatures as a Function of External Energy Dump Resistor

The potted coil requires a larger amount of training to reach a high fraction of short sample and requires retraining above 85% ss for subsequent cooldowns. We conclude that potted structures are impractical above 80% of short sample. The rate of internal quench propagation depends on the amount of liquid within the coil. However, this study has not determined whether the relatively poor quench stability of the potted coil was due to the exclusion of liquid helium or due to stress relieving of the epoxy structure.

References

1. B. Cox, et al., Design, Fabrication, and Performance of a Low Current Superconducting Beam Line Dipole, IEEE MAG-15, 126 (1979).

2. W. Craddock, et al., A Prototype Low Current Superconducting Quadrupole for Fermilab's High Intensity Laboratory, Fermilab TM-906 (1979) unpublished, and presented to the 1979 Cryogenic Engineering Conference, Madison, Wisconsin.

3. The epoxy was DER32-NMA-DMP30 in the ratio 100-80-1 and cured 10 hours at 200°F followed by 4 hours at 250°F.

4. R. H. Flora, et al., Quench Development in Magnets Made with Multifilamentary NbTi Cable, IEEE MAG-13, 28 (1977).

5. C. N. Whetstone and R. W. Boom, Nucleate Cooling Stability for Superconductor-Normal Metal Composite Conductors in Liquid Helium, Advances in Cryogenic Engineering, Vol. 13, p. 68 (1967).