Fermilab

TM-900
1738.000
CCI Report No. 390-110

EVALUATION OF WET AND GAS HELIUM EXPANSION ENGINES
(Fermilab Reciprocating Design)

PREPARED UNDER FERMILAB SUBCONTRACT NO. 94199
BY CRYOGENIC CONSULTANTS, INC.
ALLENTOWN, PA.

FOR

FERMI NATIONAL ACCELERATOR LABORATORY
BATAVIA, ILLINOIS

10 July 1979

CONTENTS

Section	Title	Page No.
1	INTRODUCTION	2
2	MAJOR DESIGN CHANGES RECOMMENDED	2
2.1	Seal Location	2
2.2	Shaft Sleeve	4
2.3	Crank Bearing; Wet Engine	4
2.4	Crank Bearing; Gas Engine	5
2.5	Crankshaft End Support Bearings; Gas Engine	5
2.6	Cam Follower	7
2.7	Valve Rocker Arm; Wet Engine	7
3	COMMENTS ON INDIVIDUAL DRAWINGS	7
3.1	Wet Engine	7
3.2	Gas Engine	20
4	BEARING ANALYSIS	29
4.1	Assumptions	29
4.2	Life Expectancy Summary; Wet Engine	29
4.3	Life Expectancy Summary; Dry Engine	31
5	LUBRICATION	34
6	CALCULATIONS	35
7	GENERAL COMMENTS	49

EVALUATION OF FERMILAB WET AND GAS HELIUM EXPANSION ENGINES

1. INTRODUCTION:

This report summarizes a design review of both the wet and gas helium expansion engines which were evaluated in terms of long range reliability, ease of manufacture, and minimum cost.

Comments and recommendations are grouped into the following categories:

- Major design changes recommended.
- Comments on individual drawings.
- Bearing analysis.
- Lubrication.
- General comments.

2. MAJOR DESIGN CHANGES RECOMMENDED:

2.1 Seal Location:

The present design positions the shaft seal below the linear bearing. In order to inspect or change the seal, the entire bearing assembly must be removed. If there is a seal leakage, the resulting cold shaft will form ice crystals, attract water, and possibly grit particles into the bearing raceway.

It is recommended that the shaft seal be relocated above the linear bearing for the following reasons:

a) Ease of changing seal.

b) Ease of inspection.

c) Ease of determining leakage.

d) Ease of visual check of shaft.

e) Keep ice from forming in bearing.

f) Ice on shaft can be detected and eliminated.

A tentative layout of a revised bearing and seal housing is shown on Sketch #1.

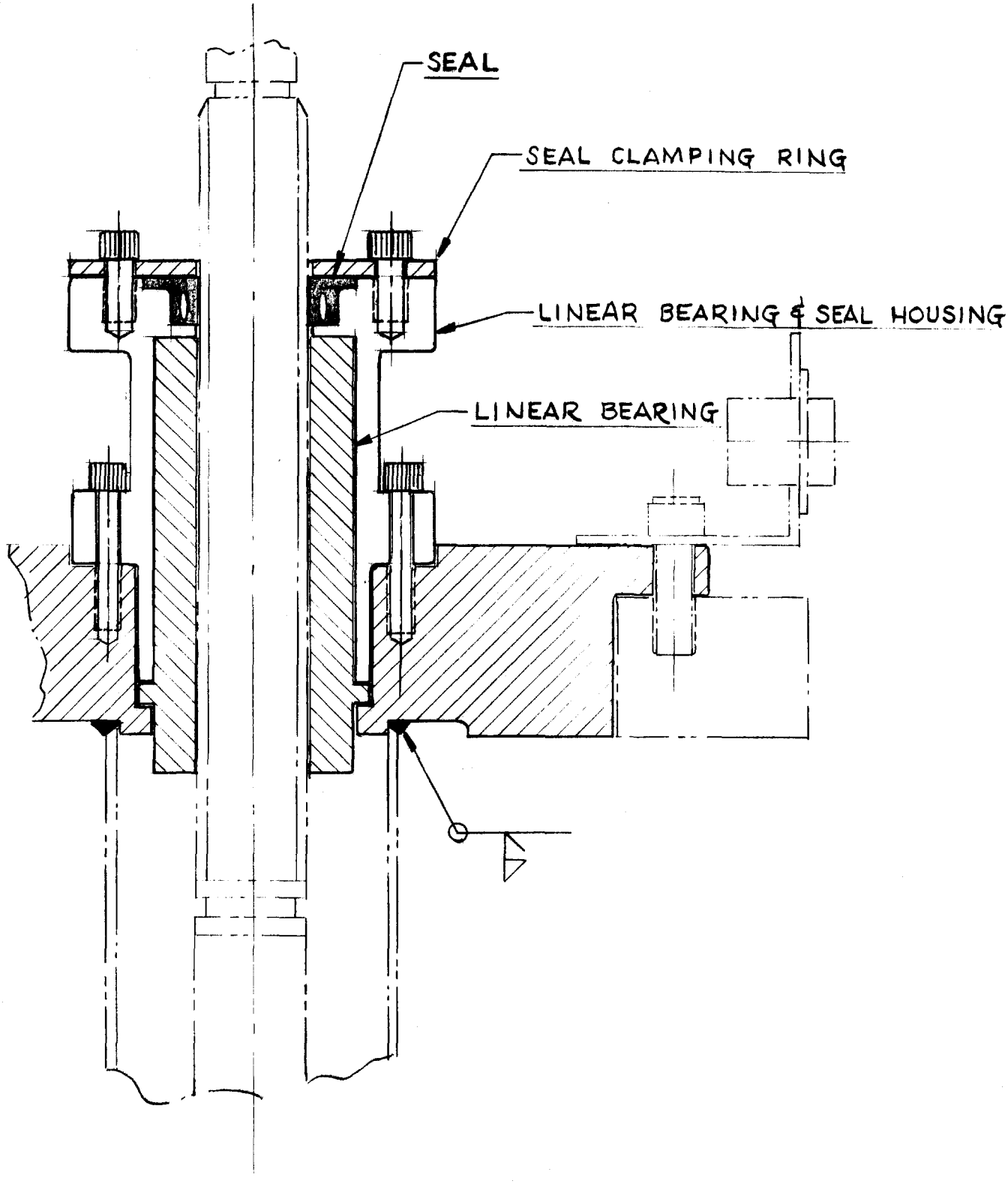

LINEAR BEARING w/ OUTBOARD SEAL

WET ENGINE

SKETCH NO. 1

CCI REPORT NO. 390-110

2.2 Shaft Sleeve:

The piston rod shaft requires a hardened surface where it travels within the linear bearing. In the present design, the hardened surface is obtained by shrink-fitting a hardened sleeve over a stainless steel shaft and then grinding the surface to the proper concentricity and finish.

Several manufacturers indicate that this approach (although feasible) is costly for the following reasons:

2.2.1 The thin wall of the sleeve is difficult to machine and retain concentricity.

2.2.2 In order to prevent hollow spots when the shaft and sleeve are united, the sleeve bore must be honed.

2.2.3 Close tolerance must be maintained because only small diameter clearances can be obtained when uniting the pieces.

2.2.4 The sleeve can only be heated to a relatively low temperature (+200°F),or the hardness will be affected.

2.2.5 Not all manufacturers are proficient or willing to shrink the shaft in a liquid nitrogen bath.

2.2.6 Uniting the sleeve to the shaft must be accomplished quickly and uninterrupted, or seizing will result.

2.2.7 Warping of the shaft and sleeve results from the shrinking operation.

It is recommended that the hardened portion of the shaft be made of one piece construction with a threaded end. The outside diamter, originally slightly oversize, can be ground true and finished after it is assembled to the stainless steel portion of the shaft.

The proposed design revision is shown on Drawings 1820-MD-111498 and 1820-MB-111153.

2.3 Crank Bearing; Wet Engine:

The bearings selected in this design were evaluated for life expectancy based upon the manufacturer's

B-10 rating. The complete analysis is tabulated in Section 4. Every bearing in the wet engine, with the exception of the main crank bearing, has a life expectancy of a minimum of 6,000 hours. The crank bearing has a life expectancy of 4,300 hours at 300 RPM (2,700 hours at 500 RPM), and is the weakest bearing in the system.

It is recommended that the crank bearing be changed to two McGill No. SB-22205 Sphere-Rol bearings. The life expectancy is improved to 30,000 hours at 500 cycles per minute. This bearing can be fitted into the present design by increasing the width of the connecting rod from 1-1/4 to 1-7/16 in. at the crank and reducing the thickness of the crank spacers accordingly. A drawing showing a connecting link revised to hold the larger bearing is shown in Sketch #2.

2.4 Crank Bearing; Gas Engine:

The crank bearing selected has a life expectancy of only 1,600 hours at 500 CPM. It is suggested that this bearing be replaced with two McGill No. SB-22212 bearings. This pair of bearings has a combined basic dynamic capacity of 53,600 pounds which provides a life expectancy of 10,000 hours at 500 CPM (or 16,500 hours at 300 CPM).

These bearings (two required) were selected as an alternate because their O.D. and bore can readily be adapted within the envelope of the existing connecting rod. The combined width of the bearings is 2.2048 in. and can readily be accommodated by increasing the width of the connecting rod from 2 to 2-1/4 in. The crankshaft spacers must be reduced in thickness approximately 1/8 in. each.

2.5 Crankshaft End Support Bearings; Gas Engine:

The crankshaft end support bearings selected have a life expectancy of 5,000 hours at 500 CPM. It is suggested that this bearing be replaced with the next larger size which is a McGill No. SB-22212. The bearing support can be widened slightly to accommodate this bearing. The life is improved to 11,000 hours at 500 CPM.

This selection is the same bearing as used at the crank and means that one fewer style bearing needs to be stocked as a spare.

MAT'L.- ST. STL.- 304

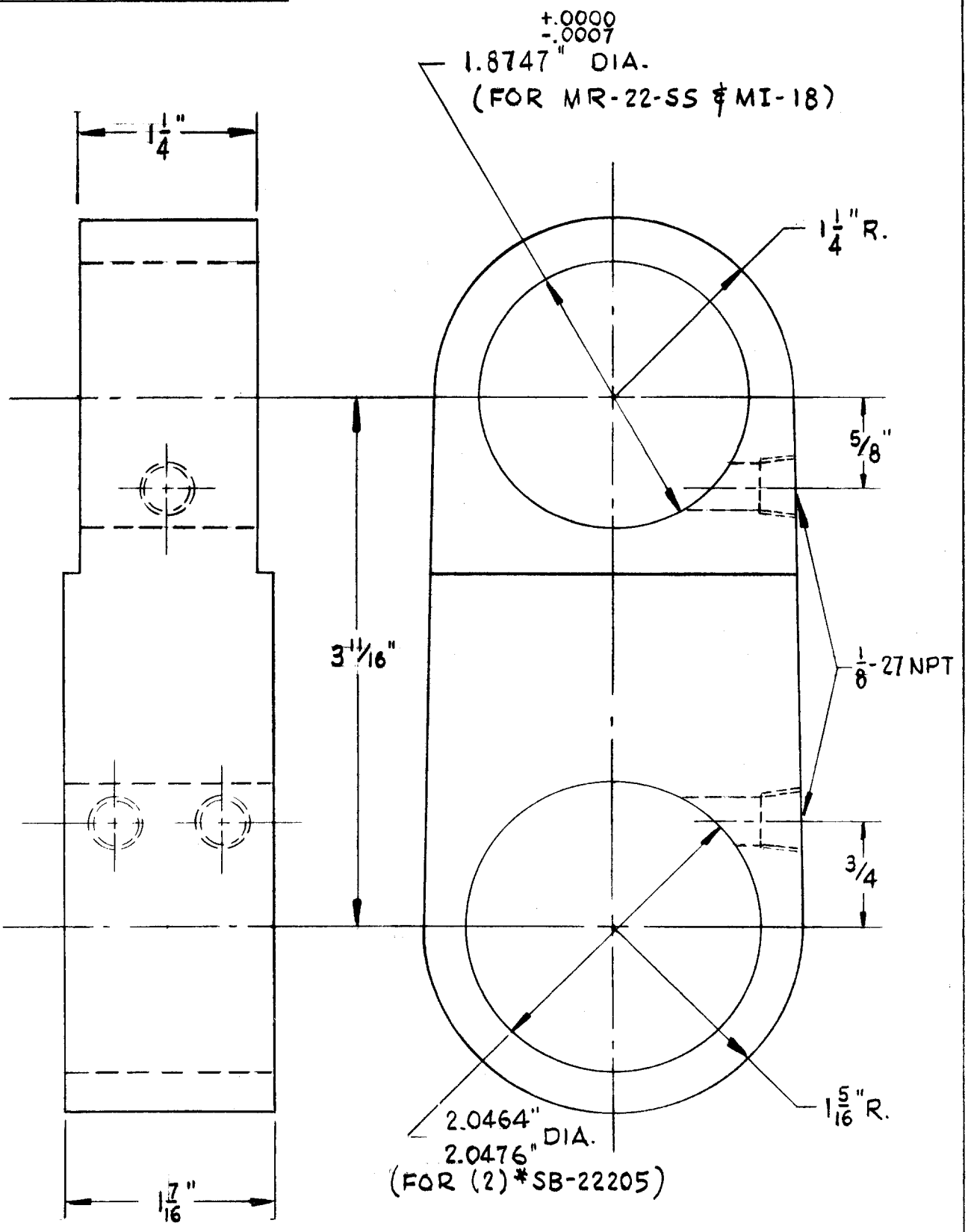

CONNECTING ROD- WET ENGINE

SKETCH NO. 2

CCI REPORT NO. 390-110

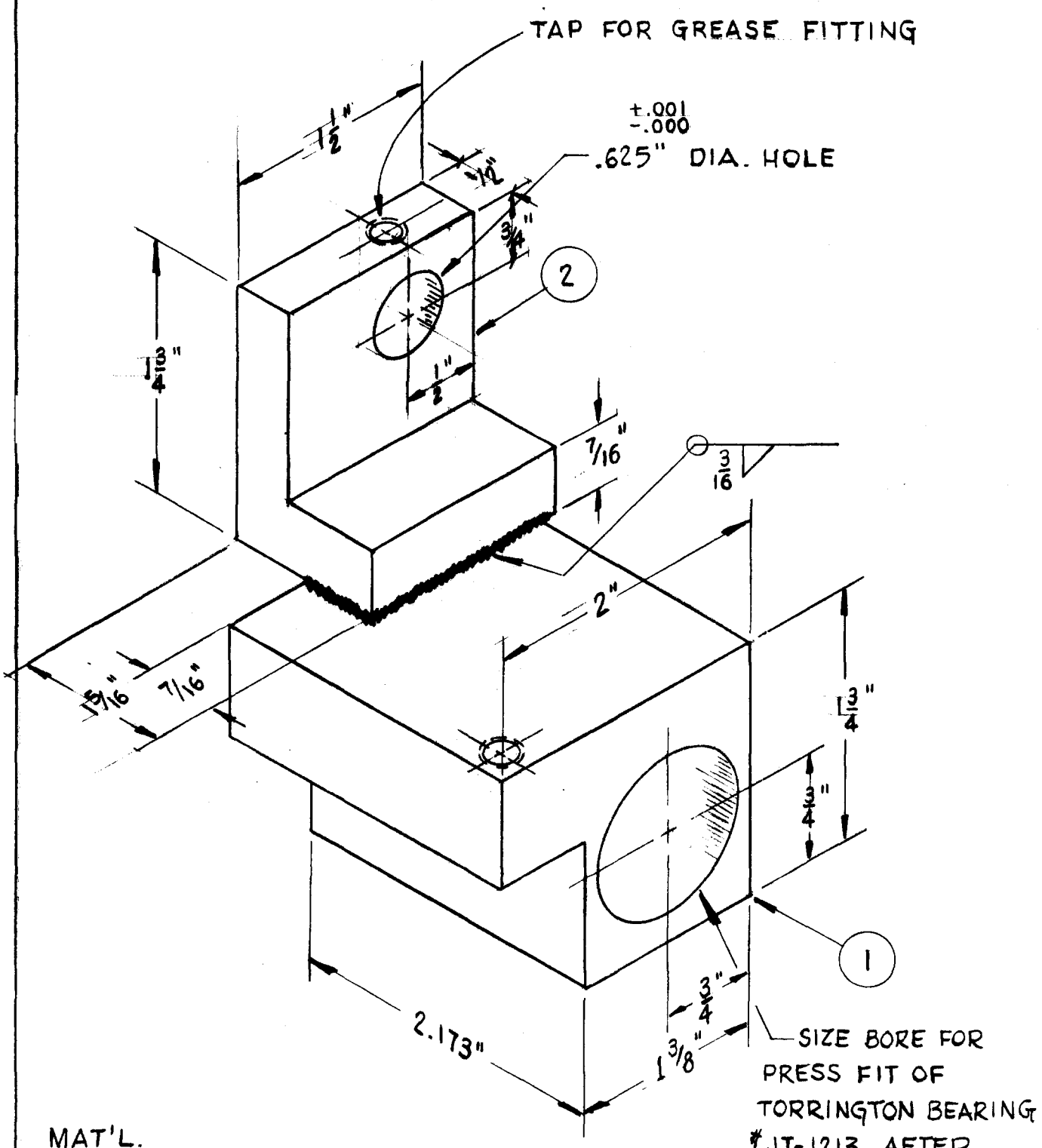

MAT'L.

ITEM-1 BAR, 2" x 2" x 2 1/4" LG. ST.STL. 304

ITEM-2 BAR, 1 1/2" x 1 1/2" x 1 3/4" LG. ST.STL. 304

ROCKER ARM-WET ENGINE

SKETCH NO. 3

C.C.I. REPORT NO. 390-110

1820-MB-111004:

1. Increase depth of bore .015 in. to insure that material is removed to allow collar to clamp.

2. 8-1/2 in. length not attainable from stock as called out.

3. Add "after assembly with 1820-MB-111002" where required.

4. Call for saw cut.

5. "Open area" shown for clarity.

6. Drill and ream for 1/4 in. dowel pin.

1820-MB-111005:

1. The piston groove depth is greater than the rider ring thickness; therefore, the rider ring does nothing. Increase O.D. as shown.

2. Add tolerance to I.D.

1820-MB-111008:

1. Change radius to $.183 \begin{smallmatrix} +.000 \\ -.005 \end{smallmatrix}$ to prevent binding in rocker arms.

1820-MB-111011:

1. Added finish mark.

1820-MB-111012:

1. O.D. may interfere with cylinder bore. Reduce to $2.370 \begin{smallmatrix} +.000 \\ -.005 \end{smallmatrix}$

2. I.D. may drag on piston. Increase to 1.520.

3. Show tolerance.

4. 1.848 I.D. should agree with the I.D. shown on 1820-MB-111014 because the same parts fit the counterbore.

1820-MB-111014:

1. I.D. should agree with I.D. shown on 1820-MB-111012 because the same parts fit the counterbore.

1820-MB-111015:

1. Show tolerance.

1820-MB-111016:

1. Both O.D.'s are too big to fit bores of 1820-MB-111113 and 1820-MB-111014.

2. Show tolerance.

1820-MB-111022:

1. Show finish on bore.

2. Eliminate finish on O.D.

3. Add tolerance to bore.

1820-MB-111029:

1. Eliminate #4 finish.

2. Hold close tolerance on I.D. for only 1/2 in. at each end.

1820-MB-111030:

1. #8 finish is satisfactory.

2. 1/4 in. radius cut shown on end to simplify manufacturing.

3. Show tolerance.

1820-MB-111047:

1. Increase height 1/16 in. to eliminate break-through of C-bore.

2. Increase C-bore to 13/32 in. diameter to clear head of bolt.

3. Tolerances of $\pm.001$ are impractical for bolt holes and dowel pin. Mating hole for dowel pin should be located from this piece anyway.

1820-MB-111048:

1. Increase allowable tolerance, call for correct bore per bearing handbook, and eliminate sawcut and clamping bolts. (See sketch No. 2.)

2. Add chamfers to one side of bores.

3. No need to machine sides of stock material. The bearing is 1.250 in. wide, and the inner ring is 1.260 in. wide.

4. Reference bearing as Item 56 on 1820-ME-111180.

1820-MB-111052:

No Comment (N/C).

1820-MB-111113:

1. With tolerances shown, O.D. does not fit bore of 1820-MB-111014.

1820-MB-111123:

N/C.

1820-MB-111124:

N/C.

1820-MB-111125:

N/C.

1820-MB-111126:

N/C.

1820-MB-111128:

1. Add two tapped holes to be used as jacking holes for ease of removal.

2. Increase diameter of bolt clearance holes.

3. Increase I.D. to .812 in.

4. See proposal for redesign of linear bearing housing incorporating outboard seal. (Sketch No. 1)

1820-MB-111129:

1. N/C.

2. See proposal for redesigning linear bearing housing incorporating outboard seal. (Sketch No. 1)

1820-MB-111130:

1. Length must be increased in order to hold seal firmly.

2. Open clearance holes for bolts.

1820-MB-111138:

N/C.

1820-MB-111139:

N/C.

1820-MB-111140:

1. Indicate I.D. and O.D. as "REF." so no machining is done.

2. Wall thickness at cut must be shown.

3. End (cross section) view shows more than top view.

1820-MB-111141:

1. Suggested that a counterbore provides alignment and a stronger fillet weld at assembly.

1820-MB-111142:

1. Cannot make part from material as called out. Revise to 7/8 in. O.D. x .049 in. wall.

1820-MB-111143:

1. Eliminate C-bore and make chamfer.

1820-MB-111144:

1. Counterboring hole in cylinder head eliminates machining requirement on this piece.

2. Call out material as 7/8 in. O.D. x .035 in. wall.

1820-MB-111149:

1. No need to drill 2-5/8 in. deep. Limit depth to 1-5/8 in.

2. No need to hold close tolerances on lengths. Fractional dimensions suffice.

3. Specify O.D. per bearing handbook.

4. Add fractional tolerance ±1/64 in.

1820-MB-111151:

1. Arrangement refers to this item as "crosshead" pivot pin.

2. Fractional length okay.

3. Add fractional tolerance ±1/64 in.

1820-MB-111152:

1. Fractional length okay.

2. Add fractional tolerance ±1/64 in.

1820-MB-111153:

1. Eliminate hardened sleeve. Make this "upper end" of shaft of hardenable steel slightly oversize and threaded. Grind O.D. to size after assembly.

1820-MB-111154:

1. Eliminate this item. (See 1820-MB-111153.)

1820-MB-111157:

N/C.

1820-MB-111158:

1. Add "wrench tightening" flats.

1820-MB-111160:

N/C.

1820-MB-111161:

1. Change material to brass to prevent galling in threads and scratching valve rods.

1820-MB-111164:

N/C.

1820-MB-111173:

1. No need to buy rod .0025 in. oversize. Specify 5/16 in. Ø.

1820-MB-111176:

1. Note says grind off corner, but two shown ground.

1820-MB-111177:

N/C.

1820-MB-111181:

N/C.

1820-MB-111182:

N/C

1820-MB-111193:

1. Hexagonal cut in center is easier than forming six tabs and still gives point support.

2. Six holes are not equally spaced.

3. General arrangement drawing calls for only four studs (Items 91 and 98).

1820-MB-111194:

N/C.

1820-MB-111195:

N/C.

1820-MB-111235:

1. Use 3/8 in. stock.

2. 1/4 in. depth of insert is important along with overall length.

3. Add fractional tolerance ±1/64 in.

1820-MB-111272:

N/C.

1820-MB-111289:

1. 3/32 in. diameter shown on drawing does not agree with 3/16 in. diameter stock called out.

2. Use 302 stainless steel spring temper.

1820-MB-111297:

N/C.

1820-MB-111413:

1. Make from Oilite No. AA-1106-2.

1820-MB-111414:

1. 1/16 x 45° chamfer ends.

1820-MB-111420:

1. Increase height 1/16 in. to avoid breakthrough of C-bore.

2. Increase C-bore to 13/32 in. diameter to clear head of bolt.

3. Tolerances of .001 in. are impractical for bolt holes and dowel pins. Mating holes for dowel pin should be located from this piece anyway.

1820-MB-111421:

1. Replace radiused corner with 3/16 x 45° chamf.

1820-MB-111423:

N/C.

1820-MB-111459:

1. Make from brass.

1820-MB-111491:

1. Attach parts with 3/16 in. full penetration bevel weld.

2. Machine dimensions marked (*) after welding.

3. 19/32 dimension is both wrong and superfluous.

1820-MB-111496:

1. Add thread runout undercut.

2. Reduced diameter is not required.

3. Show 3 in. referenced dimension.

1820-MB-111497:

1. Perform welding preparation at this stage by chamfering ends and adding eight holes for plug welds.

2. Specify 13-27/32 in. length.

3. Move Note 1 closer to dimension.

1820-MB-111509:

N/C.

1820-MB-111510:

N/C.

1820-MB-111511:

N/C.

1820-MB-111512:

1. Increase I.D. to 7/32 in.

1820-MB-111516:

1. Design consideration to reduce cost of piece. Eliminate O.D.

1820-MB-111517:

1. Show full penetration bevel welds.

2. Show lengths at 26-7/16 in.

3. Add fractional tolerance ±1/64 in.

1820-MB-111519:

1. Add 1/4 in. dimension to locate #8-32 holes.

1820-MB-111521:

N/C.

1820-MB-111552:

1. Make from brass.

1820-MC-111003:

1. Increase length to 19.612 in.

2. Change picture to show relationship of Item 1 engaging Item 2.

3. Item 3 called out on 1820-ME-111180.

4. New Item 3; add dowel pin.

5. Revise drill and ream note.

6. Add Note 1.

1820-MC-111038:

1. Add chamfer 1/32 x 45° to one edge of bearing bore to ease assembly.

2. Increase diameter of grease port.

3. Dowel pin holes must be located and drilled after assembly with base plate 1820-MD-111411 and all components aligned.

1820-MC-111040:

1. Very complicated part to manufacture. Consider redesign. (See sketch No. 3.)

1820-MC-111041:

1. Very complicated part to manufacture. Consider redesign. (See sketch No. 3.)

1820-MC-111127:

1. This item should be combined with 1820-MC-111131 and separated with sawcut.

1820-MC-111131:

1. This item should be combined with 1820-MC-111127 and separated with sawcut.

1820-MC-111133:

1. Material called out 1/32 in. thick should be 1/16 in. thick.

1820-MC-111135:

1. Reduce diameters as shown to fit holes in cylinder head.

1820-MC-111136:

1. Show 3/16 in. fillet weld.

2. Show holes plugged to avoid confusion.

3. Add to Note 1 as shown.

4. Item 2 is valve guide blank.

1820-MC-111146:

1. Replace 1 in. rad with 1/8 in. chamfer.

2. Revise Note 1.

1820-MC-111148:

1. Add 1/16 in. chamfers to aid assembly of bearings.

2. Note that the bearings are already called out on assembly drawings. Possible to duplicate quantity ordered.

3. Due to small cross section of housing, it is advisable to reduce the diameter of the bearing bore by .001 in.

1820-MC-111150:

1. Offset bore and tapped hole to avoid breaking through edge with bolt hole.

1820-MC-111172:

1. Reduce I.D. to 1.850 in. to provide for groove weld the full thickness of the cylinder tube.

2. Revise Note 1 to read 1820-MC-111415.

3. Is .009 in. difference in hole location critical?

1820-MC-111415:

1. Revise picture of weld attachments.

2. Specify new weld symbols and sizes.

3. Item 1 is cylinder flange.

4. Consider 3/4 in. thread at both ends, then the rod cannot be installed wrong.

1820-MC-111418:

1. This piece is drilled and C-bored for #4 socket head cap screws. Drawing 1820-MD-111410 calls for #6-32 tapped holes and Drawing 1820-ME-111180 calls for #6-32 screws. Piece okay - #6 screws are too big; should be #4-40.

1820-MC-111419:

1. Replace 1 in. radius with 1/8 in. chamfer.

2. Revise Note 1.

1820-MC-111518:

N/C. Just seems like a very expensive piece to hold small items.

1820-MD-111134:

1. Show hole plugs and welds for clarity.

2. Revise Note 1.

3. Add Note 2.

4. Combine .437 in. drilling operation with .630 in. C-bore.

5. Add (*) and "See Note 2" as shown.

1820-MD-111145:

1. Attach Items 1 and 2 with fillet weld.

2. Add weld sizes as shown.

3. Reverse directional arrows for Section A-A.

4. Change weld attachments of Items 3, 4, 5, and 6.

1820-MD-111147:

1. Increase length of piece 1/4 in. to avoid small wall clearances.

2. Drill and tap deeper.

3. Remove 3/16 in. dimension.

1820-MD-111410:

1. Change #6-32 tap to #4-40.

2. Modify groove for attachment of tube to insert.

3. Chamfer O.D.

1820-MD-111411:

1. Modify O-ring groove.

2. Define surface that has #32 finish.

1820-MD-111498:

1. Eliminate Item 5.

2. Draw new Item 5 (adapter).

3. Revise picture as shown.

3.2 Gas Engine (Drawings 1820-ME-111522 and 1820-ME-111529):

1820-MB-111157:

1. Add tap drill size along with note "Do not break through".

2. Eliminate I.D. of O-ring groove.

3. Reduce O.D. of O-ring groove.

1820-MB-111185:

N/C.

1820-MB-111186:

N/C.

1820-MB-111238:

N/C.

1820-MB-111266:

1. Redimension piece so it does not bind in rocker arm groove.

1820-MB-111267:

1. Consider counterbore in cylinder head plate to accept tubing so the reduced diameter can be eliminated.

1820-MB-111273:

N/C.

1820-MB-111276:

1. Specify depth of bore as .500 in.

2. Add 1/8 in. reference dimension.

1820-MB-111282:

1. Delete this item and make upper end of shaft of solid hardened steel.

1820-MB-111284:

N/C.

1820-MB-111285:

1. Revise thickness as shown.

1820-MB-111287:

1. Dimension from underside of flange.

2. Add 1/32 in. to length.

1820-MB-111293:

1. Show 9/32 in. diameter clearance holes.

1820-MB-111296:

1. Change material to nylon.

1820-MB-111297:

N/C.

1820-MB-111423:

N/C.

1820-MB-111445:

1. Add .005 in. tolerance.

1820-MB-111454:

1. Add and detail Items 2 and 3.

2. Revise diameter.

3. No. 4 finish not required.

4. Check if stock is sufficiently oversize to obtain #8 finish.

1820-MB-111456:

N/C.

1820-MB-111462:

1. Change material to nylon.

1820-MB-111466:

1. Comment: The resultant clearance between the I.D. of this piece and the piston O.D. ranges from .004 in. clearance to .004 in. interference.

2. Comment: The resultant clearance between the O.D. of the flange of this piece and the cylinder I.D. ranges from .002 clearance to .006 in. interference.

1820-MB-111467:

1. Reduce I.D. to 3.170 in.

2. Reduce O.D. to 3.482 in.

3. Revise picture of razor cut.

1820-MB-111468:

1. Reduce I.D. to 3.482 in.

1820-MB-111469;

1. Comment: The resultant clearance between the I.D. of this piece and the piston O.D. ranges from .004 clearance to .004 in. interference.

1820-MB-111470:

1. Comment: The resultant clearance between the I.D. of this piece and the upper rider ring O.D. ranges from .004 in. clearance to .004 in. interference.

1820-MB-111471:

N/C.

1820-MB-111472:

1. Increase wall thickness to .073 / .075 in.

2. Show I.D. as reference.

1820-MB-111483:

1. Increase tolerance in title block.

2. Show overall height as reference.

3. Decrease length of cylinder.

4. Change O.D.

1820-MB-111485:

1. Reduce I.D. to 1-1/32 in.

1820-MB-111486:

1. Reduce I.D. to 1-1/32 in.

1820-MB-111492:

1. Only 1-1/2 in. length of thread at each end is required.

1820-MB-111493:

N/C.

1820-MB-111494:

N/C.

1820-MB-111500:

N/C.

1820-MB-111501:

1. Add chamfer to end of screw.

1820-MB-111502:

1. Revise to 1 x 1-1/4 in. stock if rocker arms are modified.

1820-MB-111503:

1. Dowel hole must be drilled through.

2. Add maximum radius where shown.

1820-MB-111505:

1. Relocate holes to avoid contact line of crowned followers.

1820-MB-111506:

1. Relocate holes to avoid contact line of crowned followers.

1820-MB-111513:

1. Consider making two pieces at once from rectangular stock and shear to size.

1820-MB-111515:

N/C.

1820-MB-111527:

1. Change O.D. to .750 / .749 in.

1820-MB-111528:

1. Revise to 1 x 1-1/4 in. stock if rocker arms are modified.

1820-MB-111530:

1. Change to .750 / .749 in. O.D.

1820-MB-111539:

1. Bend from 11 GA stainless steel.

1820-MB-111541:

1. Bend from 11 GA stainless steel.

1820-MB-111543:

N/C.

1820-MB-111544:

1. Add countersink.

1820-MB-111547:

1. Consider cost reduction by taking radiused cut for screwdriver slot.

1820-MB-111548:

1. Consider cost reduction by taking radiused cut for screwdriver slot.

1820-MC-111169:

N/C.

1820-MC-111274:

1. Cut separation slot across entire width.

1820-MC-111275:

N/C.

1820-MC-111277:

1. Minor dimensional changes as noted.

1820-MC-111278:

1. Decrease I.D. to recommended value.
2. Add 1/32 in. chamfer.

1820-MC-111280:

1. Move drilled and counterbored hole to prevent breakthrough.

1820-MC-111286:

1. Thickness not critical.

2. Change I.D. as shown to improve weld connections.

1820-MC-111288:

1. Delete minimum length.

2. Add chamfers to ends.

1820-MC-111418:

1. Change O-ring groove.

1820-MC-111446:

1. Consider making this one piece from wood.

1820-MC-111461:

1. Edge should not extend beyond centerline of assembly.

2. Note 1 not required.

1820-MC-111463:

1. Show 30° angles as marked.

1820-MC-111481:

1. Decrease I.D. of counterbore.

2. Add chamfers as shown.

1820-MC-111482:

1. Fractional dimensions are acceptable where shown.

1820-MC-111484:

1. Increase O.D.

2. Increase lube holes to 1/8 in. diameter.

1820-MC-111507:

1. Increase depth of notch.

2. Reference dimensions to dowel pin holes.

3. Tap deeper for lube fitting.

1820-MC-111518:

N/C.

1820-MC-111524:

N/C.

1820-MC-111525:

1. Hold tolerance on width of arm to fit bushing.

1820-MC-111526:

1. Hold tolerance on width of arm to fit bushing.

1820-MC-111531:

1. There does not appear to be any difference between this piece and 1820-MC-111507.

1820-MC-111545:

1. Chamfer for bevel weld.

1820-MC-111546:

1. Chamfer for bevel weld.

2. Item 2 is spring insert.

1820-MD-111281:

1. Revise machining on underside of plate to improve weld attachment.

2. Consider reducing O.D. to 7.465 in. and eliminate bumps now machined in O.D.

1820-MD-111283:

1. Consider new design to eliminate sleeve.

1820-MD-111432:

1. Revise picture to show proper assembly and welding.

1820-MD-111457:

1. Strengthen piece by extending width of vertical arm completely around bearing housing.

2. Delete dowel pins.

3. Bearing stud should be hardened and have larger diameter.

4. Attach bearing pin as shown.

5. Consider redesign using bearing No. CCFHL-SB.

6. Call out weld sizes.

1820-MD-111458:

1. Make changes similar to those described for Drawing 1820-MD-111457.

1820-MD-111504:

1. Add note for dowel pin.

1820-MD-111523:

1. Dowel pin holes should be drilled now. Pins are to be located from these holes at assembly.

1820-MD-111533:

1. Show plugs and welds for clarity.

2. Only drill 1-1/4 in. diameter by 1 in. deep.

3. Locate dowel pin holes from 1820-MD-111523.

1820-ME-111279:

1. Change 10-5/8 in. dimension to 10-9/16 in. because mating piece was changed.

2. Check if 7.670 in. diameter can be reduced to 7.480 in.

3. Consider heli-coil or tap-lok inserts where aluminum is now tapped.

1820-ME-111522:

1. Bill of material errors as marked on drawing.

1820-ME-111529:

1. Bill of material errors as marked on drawing.

2. Details missing of seal between pushrod and base plate insert.

3. Several items not as yet identified.

4. Grease fitting (Item 2) shown as Item 8.

5. O-ring between base plate insert and piston shaft support insert must be shown and identified.

4. BEARING ANALYSIS:

4.1 The bearings were analyzed to determine their anticipated life based upon the following factors:

4.1.1 Operating pressure = 20 atm.

4.1.2 Speed = 300 CPM and 500 CPM.

4.1.3 Life = B-10 (or average time for 10% failure).

4.1.4 Shock factor = 2 (moderate shock).

4.1.5 Adequate lubrication.

4.2 Life Expectancy Summary; Wet Engine:

4.2.1 Location: Shaft Link.

Type: Torrington, Sealed Roller Bearing JTT-1414.

Motion: Oscillating.

Equivalent RPM: 3.4 RPM @ 300 Cycles/Min.
5.6 RPM @ 500 Cycles/Min.

Life: 100,000 hrs @ 300 Cycles/Min.
= 58,000 hrs @ 500 Cycles/Min.

4.2.2 Location: Connecting Rod at Crosshead.

Type: McGill No. MR-22 with Inner Ring No. MI-18.

Motion: Oscillating.

Equivalent RPM: 27 RPM @ 300 Cycles/Min.
45 RPM @ 500 Cycles/Min.

Life: 50,000 hrs @ 300 Cycles/Min.
= 20,800 hrs @ 500 Cycles/Min.

4.2.3 Location: Connecting Rod on Crankshaft.

Type: McGill No. MR-22 with Inner Ring No. MI-18.

Motion: Rotating.

RPM: 300 and 500 RPM.

Life: 4,300 hrs @ 300 RPM.
2,700 hrs @ 500 RPM

ALTERNATE SELECTION:

Type: Two McGill No. SB-22205

Life: 50,000 hrs @ 300 RPM
30,000 hrs @ 500 RPM

4.2.4 Location: Crosshead Pivot.

Type: McGill No. MR-18 with Inner Ring No. MI-14.

Motion: Oscillating.

Equivalent RPM: 20 RPM @ 300 Cycles/Min.
33-1/3 RPM @ 500 Cycles/Min.

Life: >100,000 hrs @ 300 Cycles/Min.
>100,000 hrs @ 500 Cycles/Min.

4.2.5 Location: Crankshaft End Supports.

Type: McGill No. SB-22207.

Motion: Rotating.

RPM: 300 and 500 RPM.

Life: >100,000 hrs @ 300 RPM.
>100,000 hrs @ 500 RPM.

4.2.6 Location: Linear Shaft Bearing.

Type: Rotolin No. MLF-750-1250-2.

Motion: Reciprocating.

RPM: 300 Cycles/Min. and 500 Cycles/Min.

Life: 13,900 hrs @ 300 Cycles/Min. and 50 Lbs Side Load.

8,300 hrs @ 500 Cycles/Min. and 50 Lbs Side Load.

4.2.7 Location: Cam Followers.

Type: McGill No. CYR-1-S.

Motion: Rotating.

RPM: 585 RPM @ 300 Cycles/Min.
975 RPM @ 500 Cycles/Min.

Life: 10,000 hrs @ 300 Cycles/Min and 192 Lbs Force.

6,000 hrs @ 500 Cycles/Min. and 192 Lbs Force.

4.3 <u>Life Expectancy Summary; Dry Engine</u>:

4.3.1 Location: Fork.

Type: McGill No. MR-24-SS with Inner Ring No. MI-19.

Motion: Oscillating.

Equivalent RPM: 6.7 RPM @ 300 Cycles/Min.
11.1 RPM @ 500 Cycles/Min.

Life: >100,000 hrs @ 300 Cycles/Min.
80,000 hrs @ 500 Cycles/Min.

4.3.2 Location: Connecting Line at Crossarm.

Type: McGill No. MR-36-SS with Inner Ring No. MI-28.

Motion: Oscillating.

Equivalent RPM: 6.7 RPM @ 300 Cycles/Min.
11.1 RPM @ 500 Cycles/Min.

	Life:	>100,000 Hrs @ 300 Cycles/Min. >100,000 Hrs @ 500 Cycles/Min.
4.3.3	Location:	Connecting Rod on Crankshaft.
	Type:	McGill No. MR-56-SS with Inner Ring No. MI-48.
	Motion:	Rotating.
	Equivalent RPM:	337 RPM @ 300 Cycles/Min. 561 RPM @ 500 Cycles/Min.
	Life:	2,600 Hrs @ 300 Cycles/Min. 1,600 Hrs @ 500 Cycles/Min.
	ALTERNATE SELECTION:	
	Type:	Two McGill No. SB-22212.
	Life:	16,500 Hrs @ 300 Cycles/Min. 10,000 Hrs @ 500 Cycles/Min.
4.3.4	Location:	Crosshead Pivot.
	Type:	McGill No. MR-36-SS with Inner Ring No. MI-28.
	Motion:	Oscillating.
	Equivalent RPM:	20 RPM @ 300 Cycles/Min. 33-1/3 RPM @ 500 Cycles/Min.
	Life:	70,000 Hrs @ 300 Cycles/Min. 40,000 Hrs @ 500 Cycles/Min.
4.3.5	Location:	Connecting Rod at Crosshead.
	Type:	McGill No. MR-56-SS with Inner Ring No. MI-48.
	Motion:	Oscillating.
	Equivalent RPM:	37 RPM @ 300 Cycles/Min. 61 RPM @ 500 Cycles/Min.
	Life:	22,000 Hrs @ 300 Cycles/Min. 15,000 Hrs @ 500 Cycles/Min.

4.3.6 Location: Crankshaft End Supports.

Type: McGill No. SB-22211.

Motion: Rotating.

RPM: 300 and 500 RPM.

Life: 8,500 Hrs @ 300 Cycles/Min.
5,000 Hrs @ 500 Cycles/Min.

ALTERNATE SELECTION:

Type: One McGill No. SB-22212.

Life: 19,000 Hrs @ 300 Cycles/Min.
11,000 Hrs @ 500 Cycles/Min.

4.3.7 Linear Shaft Bearing:

Type: Rotolin No. MLF-1000-1625-3.

Motion: Reciprocating.

Speed: 300 Cycles/Min and 500 Cycles/Min.

Life: 27,700 Hrs @ 300 Cycles/Min. and 50 Lbs Side Load.

16,600 Hrs @ 500 Cycles/Min. and 50 Lbs Side Load.

4.3.8 Location: Cam Followers.

Type: McGill No. CYR-2-S.

Motion: Rotating.

RPM: 600 RPM @ 300 Cycles/Min.
1,000 RPM @ 500 Cycles/Min.

Life: 10,000 Hrs @ 300 Cycles/Min. and 690 Lbs Force.

6,000 Hrs @ 500 Cycles/Min. and 690 Lbs Force.

5. LUBRICATION:

5.1 Since the lubricant affects bearing life and operation, selecting the proper lubricant is an important design function. The purpose of lubrication in bearing application is to:

5.1.1 Minimize friction at points of contact within the bearings.

5.1.2 Protect the highly finished bearing surfaces from corrosion.

5.1.3 Dissipate heat generated within the bearings.

5.1.4 Remove or prevent the entry of foreign matter.

5.2 The recommended lubricants to be used with the bearings selected in this design are as follows:

5.2.1 McGill Cagerol Series "MR":No. 1 consistency lithium soap base grease.

5.2.2 McGill Camrol Series "CCFHL":No. 1 consistency lithium soap base grease.

5.2.3 McGill Sphere-Rol Series "SB":No. 2 consistency lithium soap base grease.

5.2.4 Torrington sealed roller bearings lubricant shall have sufficient lubricity and a minimum viscosity of 100 saybolt universal seconds or 20 centistokes at the bearing operating temperature.

Either oil or grease may be used with rolling element bearings. Each has its advantages and limitations. Since oil is a liquid, it lubricates all surfaces and dissipates heat from these surfaces more readily. It is generally used for high speed applications. Oil lubricants can be circulated, cleaned, and cooled for more effective lubrication.

Grease, which is easier to retain in the bearing housing, aids as a sealant against foreign matter; however, the grease must also be compounded with mineral or synthetic oils that have viscosities greater than 100 S.U.S. or 20 centistokes at the operating temperature and have good lubricity. Frequent replenishing of the grease is necessary for optimum performance.

5.2.5 Rotolin liner bearing: Prepacked with a general purpose ball bearing oil suitable for temperatures of -40°C to +120°C. Wipe shaft occasionally with light ball bearing oil.

6. CALCULATIONS:

6.1 General Bearing Formula:

$$BDC = \text{Design Load} \times F_L \times F_S \times H_F \times C$$

Where:

BDC = Basic Design Capacity

F_L = Life Factor

F_S = Speed Factor

H_F = Hardness Factor = 1

C = Moderate Shock Load Factor = 2

6.2 Equivalent RPM for Oscillating Motion:

$$RPM = \frac{4\alpha C}{360°}$$

α = Angle in degrees from midpoint to extreme one side of travel

C = Cycles per minute

6.3 Wet Engine Bearings:

$$\text{Piston Force} = P \times A$$

$$= 20 \text{ ATM} \times 14.7 \times 1.5^2 \frac{\pi}{4}$$

$$= 520 \text{ lbs}$$

6.3.1 Torrington No. JTT-1414:

$$\text{Equiv. RPM} = \frac{4\alpha C}{360} = \frac{4 \times 1 \times 300}{360} = 3.4 \text{ RPM}$$

$$F_S = 0.4$$

$$F_L = \frac{3020}{520 \times .4 \times 2} = 7.26$$

Life = >100,000 Hrs @ 300 CPM

Equiv. RPM = $\frac{4 \times 1 \times 500}{360}$ = 5.6 RPM

F_S = 0.7

F_L = $\frac{3020}{520 \times .7 \times 2}$ = 4.15

Life = 50,000 Hrs @ 500 CPM

6.3.2 <u>McGill No. MR-22 with MI-18 Inner Ring</u>:

Force = $520 \times \frac{9.375}{5.063} \times \frac{1}{.990}$ = 972 Lbs

F_S = 1.94

F_L = $\frac{7180}{972 \times 1.94 \times 2}$ = 1.90

Life = 4,300 Hrs @ 300 CPM

F_S = 2.25

F_L = $\frac{7180}{972 \times 2.25 \times 2}$ = 1.64

Life = 2,700 Hrs @ 500 CPM

The life expectancy is too short so an alternate selection must be made.

Assume 6,000 hrs B-10 life at 500 CPM.

Load = 972 Lbs

RPM = 500		F_S	= 2.25
Moderate Shock Load		C	= 2
6,000 Hrs		F_L	= 2.12

BDC = 972 x 2.25 x 2 x 2.12

= 9,273 Lbs Required

Alternate Selection #1: One McGill #SB-22206

This selection was made because the MR-series bearing with sufficient rating is too large to readily accommodate within the overall design.

Expected Life:

$$F_L = \frac{10,300}{972 \times 1.94 \times 2} = 2.73$$

Life = 14,000 Hrs @ 300 CPM

$$F_L = \frac{10,300}{972 \times 2.25 \times 2} = 2.35$$

Life = 8,600 Hrs @ 500 CPM

Due to the compactness of the original design, extensive revisions would have to be made in order to fit this bearing into place, so another selection must be made.

Alternate Selection #2: Two McGill #SB-22204

BDC = 6,030 Lbs (each)

Bore = .7874" (20 mm)

O.D. = 1.8504" (47 mm)

Width = .7087" (18 mm)

Expected Life:

$$F_L = \frac{6030 \times 2}{972 \times 1.94 \times 2} = 3.2$$

Life = 25,000 Hrs @ 300 CPM

$$F_L = \frac{6030 \times 2}{972 \times 2.25 \times 2} = 2.76$$

Life = 14,500 Hrs @ 500 CPM

Shaft Stress

$$S = \frac{MC}{I} = W \frac{ab}{l} \times \frac{C}{I}$$

W = 972 lb

a = 1.625

b = 2.0625

l = 3.6875

c = .7874 ÷ 2 = .3937

$I = .049\ d^4 = .049 \times .7874^4 = .0188$

$$S = \frac{972 \times 1.625 \times 2.063 \times .3937}{3.69 \times .0188}$$

$$= 18{,}500 \text{ psi}$$

Shaft stress is too high. Select next larger bearing.

Alternate Selection #3: Two McGill #SB-22205

BDC = 7,500 lbs (each)

Bore = .9843" (25 mm)

O.D. = 2.0472" (52 mm)

Width = .7087" (18 mm)

<u>Expected Life</u>:

$$F_L = \frac{7500 \times 2}{972 \times 1.94 \times 2} = 4.0$$

Life = 50,000 Hrs @ 300 CPM

$$F_L = \frac{7500 \times 2}{972 \times 2.25 \times 2} = 3.43$$

Life = 30,000 Hrs @ 500 CPM

Shaft Stress

$$S = \frac{MC}{I} = W \frac{ab}{I} \times \frac{C}{I}$$

W = 972 lb

a = 1.625"

b = 2.0625"

l = 3.6875"

C = .9843 ÷ 2 = .4921"

$$I = .049\ d^4 = .049 \times .9843^4 = .046 \text{ in.}^4$$

$$S = \frac{972 \times 1.625 \times 2.063 \times .4921}{3.688 \times .046}$$

= 9,450 psi <u>Okay</u>

Use alternate selection #3.

6.3.3 McGill No. MR-22 with MI-18 Inner Ring:

$$\text{Equiv. RPM} = \frac{4 \times 8° \times 300}{3600} = 26.7$$

$$F_S = .92$$

$$F_L = \frac{7180}{972 \times .92 \times 2} = 4$$

Life = 50,000 hrs @ 300 CPM

$$\text{Equiv. RPM} = \frac{4 \times 8 \times 500}{360} = 45$$

$$F_S = 1.1$$

$$F_L = \frac{7180}{972 \times 1.1 \times 2} = 3.36$$

Life = 20,800 hrs @ 500 CPM

6.3.4 McGill No. MR-18 with MI-14:

$$\text{Force} = \sqrt{443^2 + 135^2} = 463 \text{ lbs}$$

$$\text{Equiv. RPM} = \frac{4 \times 6° \times 300}{360} = 20$$

$$F_S = .86$$

$$F_L = \frac{6480}{463 \times .86 \times 2} = 8.1$$

Life = >100,000 hrs @ 300 CPM

$$\text{Equiv. RPM} = \frac{4 \times 6 \times 500}{360} = 33\text{-}1/3$$

$$F_S = 1$$

$$F_L = \frac{6480}{463 \times 1 \times 2} = 7.0$$

Life = >100,000 Hrs @ 500 CPM

6.3.5 McGill No. SB-22207:

$$\text{Force} = 972 \div 2 = 486 \text{ lb}$$

$$F_S = 1.93 \text{ @ } 300$$

$$F_L = \frac{13900}{486 \times 1.93 \times 2} = 7.41$$

Life = >100,000 hrs @ 300 CPM

F_S = 2.25 @ 500

$$F_L = \frac{13900}{486 \times 2.25 \times 2} = 6.35$$

Life = >100,000 hrs @ 500 CPM

6.3.6 <u>Linear Bearing Rotolin #MLF-750-1250-2</u>:

BDC = 490 lb

Assume 50 lb side load.

From nomograph: 5×10^8 cycles

$$\text{Life} = \frac{5 \times 10^8}{300 \text{ CPM} \times 2 \text{ Strokes/Cycle}} \times 60$$

= 13,900 Hrs @ 300CPM or 8,300 hrs @ 500 CPM

6.3.7 <u>Cam Followers McGill No. CYR-1-S</u>:

6.3.7.1 Acceleration of Follower (a) = $\frac{2S}{t^2}$

S = lift = $r_1 - r_2$ = 1.078 - .872 =
= .206"

300 RPM = 5 RPS = .2 sec/revolution

$$t = .2 \times \frac{35°}{360°} = .01944 \text{ sec/lift}$$

$$a = \frac{2 \times .206''}{.01944^2 \times 12} = 90.85 \text{ ft/sec}^2$$

a = 2.82 g @ 300 CPM

500 RPM = 8.333 RPS = .12 sec/rev.

$$t = .12 \times \frac{35°}{360°} = .01167 \text{ sec/lift}$$

$$a = \frac{2 \times .206}{.01167^2 \times 12} = 252.1 \text{ ft/sec}^2$$

$a = 7.83$ g @ 500 CPM

6.3.7.2 Allowable Loading of Followers:

Cam Speed = 300 RPM

Ave. Cam Dia. = 1.078 + .872 = 1.95"

Roller Dia. = 1"

Ave. Roller Speed = 300 x 1.95 =
= 585 RPM

BDC = 2,225 lbs

F_L = 2.11 (for 6,000 hrs)

F_S = 2.35 (for 585 RPM)

C = 2 (moderate shock)

$$\text{Design Load} = \frac{2225}{2.11 \times 2.35 \times 2} =$$

= 225 lbs @ 300 CPM

For Cam Speed of 500 RPM:

F_S = 2.75 (for 975 RPM)

$$\text{Design Load} = \frac{2225}{2.11 \times 2.75 \times 2} =$$

= 192 lbs @ 500 CPM

6.4 <u>Dry Engine Bearings</u>:

Piston Force = P X A

$$= 20 \text{ ATM} \times 14.7 \times 3.187^2 \times \frac{\pi}{4}$$

= 2,346 lbs

6.4.1 McGill No. MR-24-SS with MI-19:

$$\text{Force} = \frac{2346}{2} = 1{,}173 \text{ lbs}$$

$$\text{Equiv. RPM} = \frac{4 \times 2^\circ \times 300}{360^\circ} = 6.7 \text{ RPM}$$

$$F_S = .6$$

$$F_L = \frac{7840}{1173 \times .6 \times 2} = 5.57$$

Life = >100,000 hrs @ 300 CPM

$$\text{Equiv. RPM} = \frac{4 \times 2^\circ \times 500}{360^\circ} = 11.1 \text{ RPM}$$

$$F_S = .73$$

$$F_L = \frac{7840}{1173 \times .73 \times 2} = 4.58$$

Life = 80,000 hrs @ 300 CPM

6.4.2 MR-36-SS with MI-28:

Load = 2,346 lbs

$$\text{Equiv. RPM} = \frac{4 \times 2^\circ \times 300}{360^\circ} = 6.7 \text{ RPM}$$

$$F_S = .6$$

$$F_L = \frac{17640}{2346 \times .6 \times 2} = 6.27$$

Life >100,000 hrs @ 300 CPM

$$\text{Equiv. RPM} = \frac{4 \times 2^\circ \times 500}{360^\circ} = 11.1 \text{ RPM}$$

$$F_S = .73$$

$$F_L = \frac{17640}{2346 \times .73 \times 2} = 5.15$$

Life >100,000 hrs @ 500 CPM

6.4.3 McGill No. MR-56-SS with MI-48:

Force = 2,346 x $\frac{14}{7}$ = 4,692 lbs

Equiv. RPM = 300 + $\frac{4 \times 11 \times 300}{360}$ = 337 RPM

F_S = 2.0

F_L = $\frac{30780}{4692 \times 2 \times 2}$ = 1.64

Life = 2,600 hrs @ 300 CPM

Equiv. RPM = 500 + $\frac{4 \times 11 \times 500}{360}$ = 561 RPM

F_S = 2.33

F_L = $\frac{30780}{4692 \times 2.33 \times 2}$ = 1.40

Life = 1,600 Hrs @ 500 CPM

The life expectancy is too short, so an alternate selection must be made.

Assume 6,000 hrs B-10 life at 500 CPM.

Load = 4,692 lbs

Equiv. RPM = 561	F_S = 2.33
Moderate Shock Load	C = 2
6,000 hrs	F_L = 2.12

BDC = 4692 x 2.33 x 2 x 2.12

= 46,354 lbs

Alternate Selection #1:

One McGill No. SB-22218 (1 req'd.)

BDC = 52,900 lbs

Bore = 3,5433" (90 mm)

O.D. = 6.2992" (160 mm)

Width = 1.5748" (40 mm)

Expected Life @ 500 CPM

$$F_L = \frac{52900}{4692 \times 2.33 \times 2} = 2.42$$

(B-10) Life = 9,500 hrs @ 500 CPM

Alternate Selection #2:

Two McGill No. SB-22212 (2 Req'd)

BDC = 26,800 lb (each)

Bore = 2.3622" (60 mm)

O.D. = 4.3307" (110 mm)

Width = 1.1024" (28 mm)

Expected Life @ 500 CPM

$$F_L = \frac{53600}{4692 \times 2.33 \times 2} = 2.45$$

(B-10) Life = 10,000 hrs @ 500 CPM

Expected Life @ 300 CPM

$$F_L = \frac{53600}{4692 \times 2.0 \times 2} = 2.86$$

(B-10) Life = 16,500 hrs @ 300 CPM

Shaft Stress:

$$S = W \frac{ab}{l} \times \frac{C}{I}$$

W = 4,692 lb

a = 2"

b = 2"

l = 4"

C = 2.3622 ÷ 2 = 1.1811"

$I = .049\ d^4 = .049 \times 2.3622^4 = 1.5257\ in.^4$

$$S = \frac{4692 \times 2 \times 2 \times 1.1811}{4 \times 1.5257}$$

$$= 3{,}632 \text{ psi}$$

Use alternate selection #2.

6.4.4 <u>McGill No. MR-36-SS with MI-28</u>:

Force = 2,346 lbs

$$\text{Equiv. RPM} = \frac{4 \times 6 \times 300}{360} = 20 \text{ RPM}$$

F_S = .85

$$F_L = \frac{17640}{2346 \times 85 \times 2} = 4.4$$

Life = 70,000 hrs @ 300 CPM

$$\text{Equiv. RPM} = \frac{4 \times 6 \times 500}{360} = 33\text{-}1/3 \text{ RPM}$$

F_S = 1

$$F_L = \frac{17640}{2346 \times 1 \times 2} = 3.76$$

Life = 40,000 hrs @ 500 CPM

6.4.5 <u>McGill No. MR-56-SS with MI-48</u>:

$$\text{Force} = 2346 \times \frac{14}{7} = 4{,}692$$

$$\text{Equiv. RPM} = \frac{4 \times 11 \times 300}{360} = 37 \text{ RPM}$$

F_S = 1.05

$$F_L = \frac{30780}{4692 \times 1.05 \times 2} = 3.12$$

Life = 22,000 hrs @ 300 CPM

$$\text{Equiv. RPM} = \frac{4 \times 11 \times 500}{360} = 61 \text{ RPM}$$

$F_S = 1.2$

$$F_L = \frac{30780}{4692 \times 1.2 \times 2} = 2.73$$

Life = 15,000 hrs @ 500 CPM

6.4.6 <u>McGill No. SB-22211</u>:

Force = 2,346 lbs

RPM = 300

$F_S = 1.93$

$$F_L = \frac{21100}{2346 \times 1.93 \times 2} = 2.33$$

Life = 8,500 hrs @ 300 CPM

RPM = 500

$F_S = 2.25$

$$F_L = \frac{21100}{2346 \times 2.25 \times 2} = 2.0$$

Life = 5,000 hrs @ 500 CPM

Alternate Selection:

One McGill No. SB-22212:

$$F_L = \frac{26800}{2346 \times 1.93 \times 2} = 2.96$$

Life = 19,000 hrs @ 300 CPM

$$F_L = \frac{26800}{2346 \times 2.25 \times 2} = 2.54$$

Life = 11,000 hrs @ 500 CPM

6.4.7 <u>Linear Bearing Rotolin No. MLF-1000-1625-3</u>:

BDC = 720 lbs

Assume 50 lbs Side Load.

From Nomograph: 10^9 Cycles

$$\text{Life} = \frac{10^9}{300 \times 2 \text{ strokes/cycle} \times 60}$$

$$= 27{,}700 \text{ hrs @ 300 CPM}$$

$$\text{Life} = \frac{10^9}{500 \times 2 \times 60}$$

$$= 16{,}600 \text{ hrs @ 500 CPM}$$

6.4.8 <u>Cam Followers McGill No. CYR-2-S</u>:

6.4.8.1 Acceleration of Follower (a) = $\frac{2S}{t^2}$

S = lift = 2.132 - 1.868 = .264"

300 RPM = 5 RPS = .2 sec/rev.

$$t = .2 \times \frac{29°}{360} = .01611 \text{ sec/lift}$$

$$a = \frac{2 \times .264}{.01611^2 \times 12} = 169.5 \text{ ft/sec}^2$$

a = 5.27 g @ 300 CPM

500 RPM = 8.333 RPS = .12 sec/rev

$$t = .12 \times \frac{29}{360} = .00967 \text{ sec/lift}$$

$$a = \frac{2 \times .264}{.00967^2 \times 12} = 470.5 \text{ ft/sec}^2$$

a = 14.62 g @ 500 CPM

6.4.8.2 Allowable Loading of Followers:

Cam Speed = 300 RPM

Ave. Cam Dia. = 1.868 + 2.132 = 4"

Roller Dia. = 2"

Ave. Roller Speed = $300 \times \frac{4}{2} = 600$ RPM

@ 300 CPM

BDC = 8,090 lbs

F_L = 2.11 (for 6,000 hrs)

F_S = 2.37 (for 600 RPM)

C = 2 (moderate shock)

$$\text{Design Load} = \frac{8{,}090}{2.11 \times 2.37 \times 2}$$

= 809 lbs @ 300 CPM

For cam speed of 500 RPM

F_S = 2.78

$$\text{Design Load} = \frac{8{,}090}{2.11 \times 2.78 \times 2}$$

= 690 lbs @ 500 CPM

7. GENERAL COMMENTS:

7.1 Tolerance:

Several drawings specified tolerances which, when applied to the nominal dimensions, could cause either interference between mating parts or non-functional components altogether. More consideration must be given to the selection of tolerances, and they should not be randomly assigned through habit.

As a general rule, the more liberal the tolerance, the less expensive it is to make the item. Close tolerances should be specified only where absolutely necessary in order to make the component acceptable.

7.2 Stock Callout:

Most drawings do not call out the actual stock necessary to manufacture the piece. It is generally bad practice to rely on unskilled or untrained personnel to interpret a drawing, decide what is required, and requisition the piece. Assigning the stock requirement at the time of drawing generation also provides a secondary benefit. The draftsman has an opportunity to evaluate his design with respect to commonly available material.

7.3 Cam Followers:

The cam follower springs are not specified for the gas engine design. It is imperative that they be selected with sufficient compressive force to hold the follower against the cam at all times.

The cam followers appear to have excellent life expectancy, but those currently in use on similar designs have exhibited very short life. Four factors contribute to premature failure.

7.3.1 Insufficient Lubrication:

These bearings are rated assuming the use of mineral or synthetic oils with sufficient lubricity and a minimum viscosity of 100 S.U.S. Any grease used must be compounded with oil which has a viscosity greater than 100 S.U.S. The cavity or reservoir in this bearing is small, therefore, frequent lubrication is necessary.

7.3.2 Insufficient Spring Loading:

Weak springs will cause the follower to leave the cam after the maximum valve open position has been reached and also hang back when the cam rotates to the valve closed position. In both cases, the follower will hammer against the cam and, because of the extremely high shock load, cause fatique of both rollers and races. Assure that the springs, when selected, have enough force to hold the follower against the cam.

7.3.3 Edge Loading:

Roller bearing life is affected by the distribution of contact stress between roller and races. Even when cylindrical rollers are loaded under conditions of ideal alignment, the contact stress is not uniform along the length of the rollers, but rather is concentrated towards the ends. Misalignment causes even greater roller and contact stress.

Due to the nature of the engine design and the unavoidable tolerance accumulation, it is virtually impossible to assure that the rollers are uniformly loaded. Crowning of the outer race or roller surface avoids the possibility of edge loading in this situation.

7.3.4 Stud Rigidity:

For a heavily loaded application such as this, the ideal mounting arrangement is to have a drive or press fit in the bore of the inner ring, the bearing clamped endwise over the end plates, and the shaft hardened. In this design, all three requirements have been ignored.

By changing to the Series CCFHL-SB heavy duty sealed and crowned cam follower with integral stud, considerable machining can be eliminated, and a more rigid design is achieved.