Fermilab

TM-897
1620.000
CCI Report No. 390-109

HEAT REMOVAL FROM BEAM SCRAPING OF AN ENERGY DOUBLER MAGNET

PREPARED UNDER FERMILAB SUBCONTRACT NO. 94199
BY CRYOGENIC CONSULTANTS, INC.
ALLENTOWN, PA.

FOR

FERMI NATIONAL ACCELERATOR LABORATORY
BATAVIA, ILLINOIS

15 May 1979

INTRODUCTION
(Ref. CCI Dwgs. 4016-D and 4017-D)

The question has been raised whether some heating from beam scraping of the wall of the bore tube of a dipole magnet could be intercepted by means of a refrigeration stream separate and different from the subcooled liquid helium in the magnet itself. In order to accomplish this, a separate structure, consisting of a metallic block with cooling channels, will be added to the bore tube. The block will be supported by the 4.5°K bore tube of the magnet by means of sets of non-metallic pins, recessed in the block. The cooling channels will either be two parallel 3/8 in. diameter tubes over the full length of the block or an envelope around the block.

To reduce eddy currents in the material of the block, the bulk of the block will consist of laminations. The laminations are located inside the cooled periphery of the system. In this case, some contact is required between the laminations and the cooling channel, but the degree of contact is unimportant. The temperature of the laminations could be 50-100°K above the temperature of the coolant.

Heat leak between the structure and the 4.5°K bore tube is primarily caused by the support pins. It is advantageous to reduce the number of pins by making the total structure as stiff as possible. Structures as shown on Dwgs. 4016-D and 4017-D easily permit removal of 1 kW of heating from the laminations. In fact, the structure of Dwg. 4017-D permits removal of 4-5 kW per 20 ft length without undue pressure drop by flowing boiling liquid nitrogen through the channel around the laminations. Freezing of the liquid nitrogen in case of absence of heating can easily be prevented by flowing liquid (or gaseous) nitrogen at a low rate at all times.

The system can respond rapidly to heating by first storing energy in the metal and then increasing flow rate. Heat capacity of the block, when made of stainless steel laminations in accordance with Dwg. 4017-D, is of the order of 15,000 joules per °K temperature rise.

SUMMARY

It is quite feasible to remove 1-5 kW of heat from a 20 ft long block by means of a gaseous helium or two-phase stream. The temperature of the block may be maintained at 80-100°K, when helium gas is used and at 80-83°K when a two-phase liquid nitrogen stream is used.

Heat leak to the superconducting magnet may be maintained at a value of 1 W or less. Also, because of large heat capacity of the block, temporary large increases in heat flux may be absorbed.

DISCUSSION

1. Cooling with Helium Gas:

It has been assumed that the helium flows through two parallel tubes in one direction. Flow rate of helium is assumed to be approximately 10 g/sec at a pressure of 20 ata (279.3 psig) for removal of 1,000 W. Under these conditions, pressure drop is small and the heat transfer coefficient is large enough to maintain the temperature of the block at 82.5 to 102.5°K. There will be a temperature gradient along the block of 20°K, since conduction of heat is insignificant. The calculations are attached in Appendix A.

2. Cooling with Liquid Nitrogen:

A flow rate of 6 g/sec has been assumed for removal of 1,000 W. This assures us that some liquid nitrogen will exit from the cooling channels. This then will provide a nearly uniform temperature of the block.

Pressure drop of the two-phase mixture has been calculated to determine the extent of temperature gradient. It appears that pressure drop is low enough to allow liquid nitrogen to flow in and out at the same end of the block with a turnaround provided at the other end.

The type of flow in the tubes was determined for one directional flow. It appears to be slug, annular, and wave type, dependent on quality. By increasing the mass flow rate by a factor 2, type of flow will be mostly in the annular flow regime.

Since heat flux from the block into the two-phase nitrogen stream is less than .25 W/cm^2, temperature difference between block and nitrogen will be small. Consequently, block temperature will be uniform over its length and within 2-3°K of the temperature of the boiling of fluid. Calculations made for two-phase nitrogen flow are attached in Appendix A.

3. Heat Leak to the 4.5°K Bore Tube:

Heat leak by radiation from a block at 100°K is of the order of .2 W. Heat leak through the supports as shown in Dwg. 4016-D is of the order of 1 W. This number is based on the use of nylon bushings of 5/16 in. OD and 3/16 in. ID with length of .3 in. It appears that we can reduce the wall thickness or total cross section for heat flux and reduce the heat flux to the 4.5°K system probably by a factor 2. Calculations are attached in Appendix A.

4. Design Considerations:

The size of the beam envelope should be a horizontal slot 3/4 in. height by 2 in. length with 3/8 in. radiused ends. This configuration could also be described as a 3/4 in. x 2 in. obround hole. In order to minimize the effect of eddy currents, the 20 ft long beam tube envelope shall be of laminated stainless steel construction. Laminations would be nominally .065 in. thick (16 ga.). The beam envelope shall be supported in such a manner as to orient and maintain the slot in the center of the beam tube and keep heat conduction losses through the supports to a minimum.

Since the laminations are intended to absorb energy and increase in temperature, the relative expansion between them and the nitrogen carrying components must be considered.

(Design #1 (Figure 1):

The laminations are die-cut to uniform dimensions and tolerances and stacked over four tubes which convey the liquid nitrogen coolant. To insure good thermal contact between the tubes and the laminations, the tubes are first coated with a solder. After the laminations are stacked in place and compressed lengthwise, the tubes are expanded to fit snuggly within the holes. The assembly is then heated in a furnace to solder the tubes to the laminations.

Standoff pockets are created along the length of the assembly by stacking four special punched laminations in succession wherever the pockets are required. (See exploded view of Figure 1.) The supports are located at the four corner radii of the beam tube to prevent relative rotation of the beam envelope with respect to the beam tube.

Design #2 (Figure 2):

This design is similar to Design #1, except for the following variations:

1) The physical size of the laminations have been reduced.

2) Six standoff pockets are provided.

3) Smaller tubes are used.

Design #3 (Figure 3):

In this design the laminated beam envelope is captivated within a liquid nitrogen shield. Assembly and holding of the laminations within the shield inner tube is accomplished by first slitting the tube lengthwise. The laminations can then be positioned with minimum effort and compressed together. The split tube is then tightly clamped around the laminations and the seam welded.

The spacing between the shield inner and outer tubes is maintained by spacers welded to the inner tube. The beam envelope and shield assembly is supported within the beam tube by insulator standoffs captivated by short lengths of tubing welded at appropriate intervals along the shield. Because the laminations heat up as energy is absorbed, they will expand to fill any void that may exist between them and the nitrogen shield. This will increase the surface area contact and improve the thermal conductivity.

Figure 4 shows a typical liquid nitrogen line connection to the annular shield.

Design #4 (Figure 5):

This design is a simplification of design #4 and is proposed as a possibility if a 3/4 in. x 1-11/16 in. obround beam envelope is acceptable. The advantage of this design is that the nitrogen shield is constructed of readily available thin-wall round tubing.

Flattening and/or redrawing the round tubes to an oval configuration should be evaluated as a possible variation of this design in order to retain the 3/4 in. x 2 in. beam envelope. This arrangement is shown as design #5 in Figure 6. Side standoffs can be mounted in a pocket comprised of a short length of tubing welded through the shield outer tube. Any penetration through the shield wall is a potential vacuum leak and should be avoided if possible.

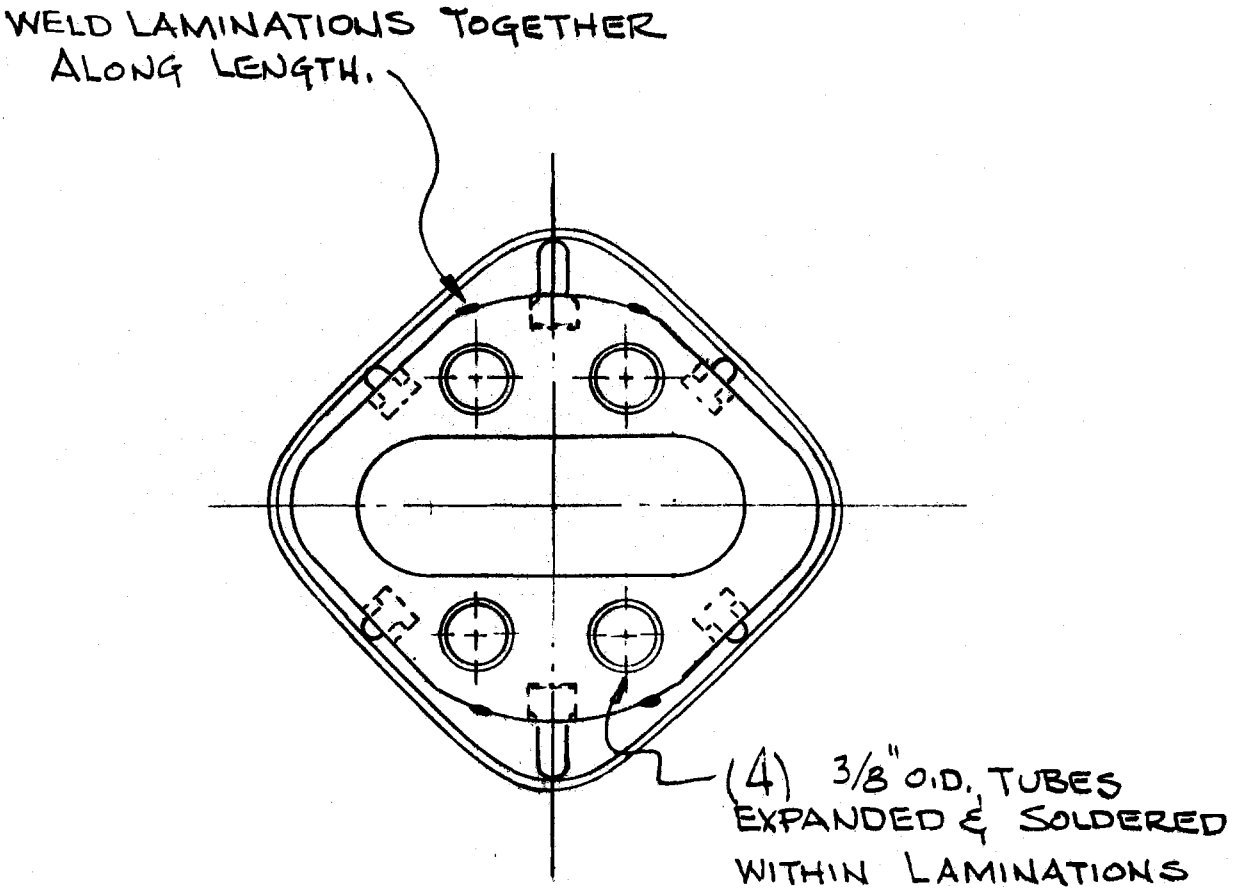

FIG. 2 - DESIGN # 2

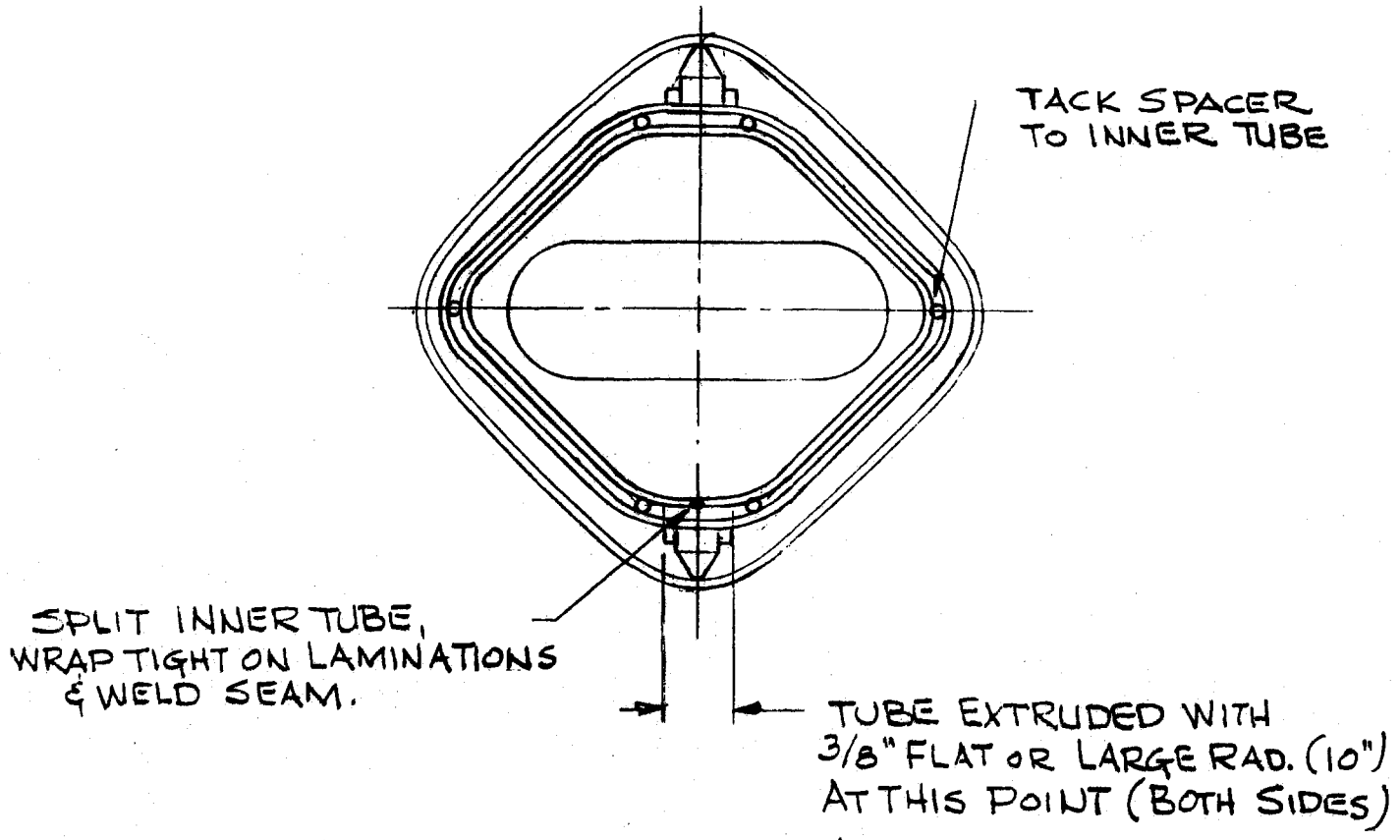

FIG 3 - DESIGN #3

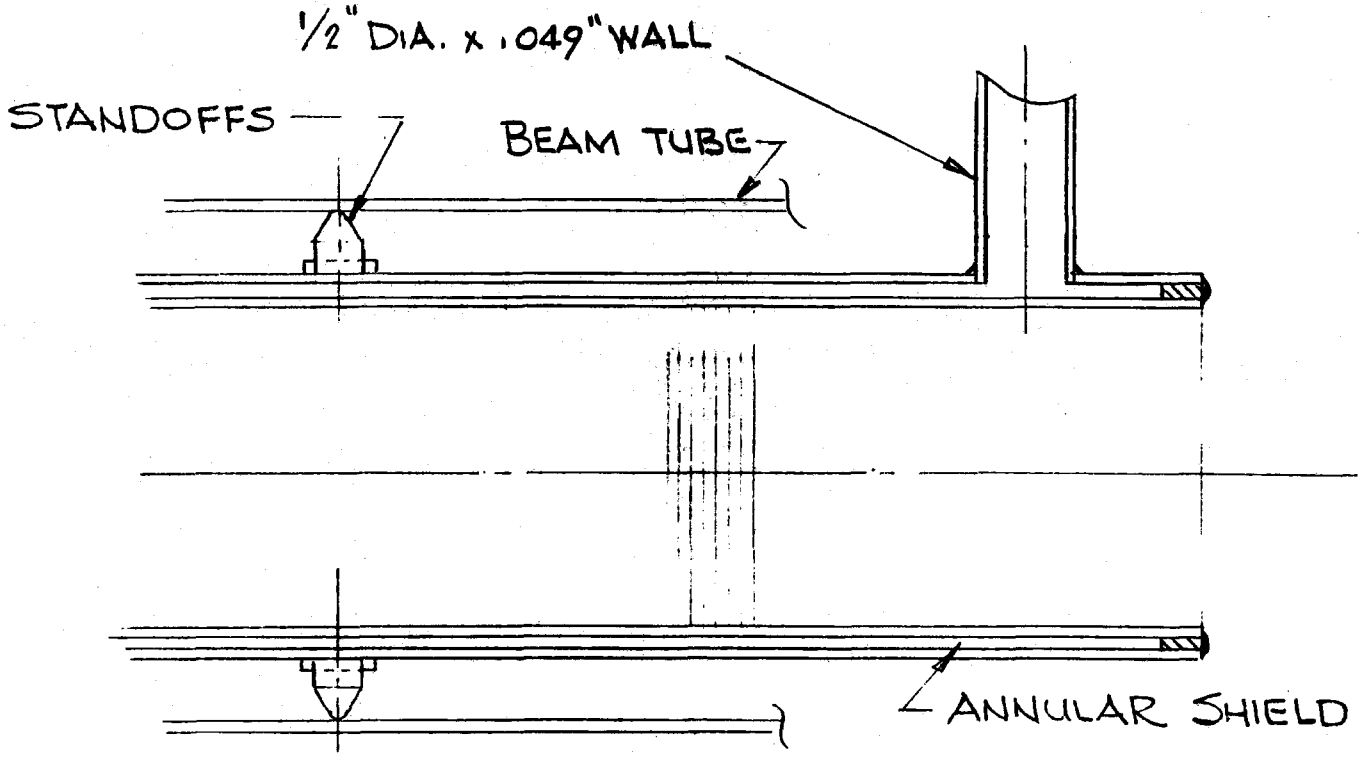

FIG 4 - CONNECTION TO ANNULAR SHIELD

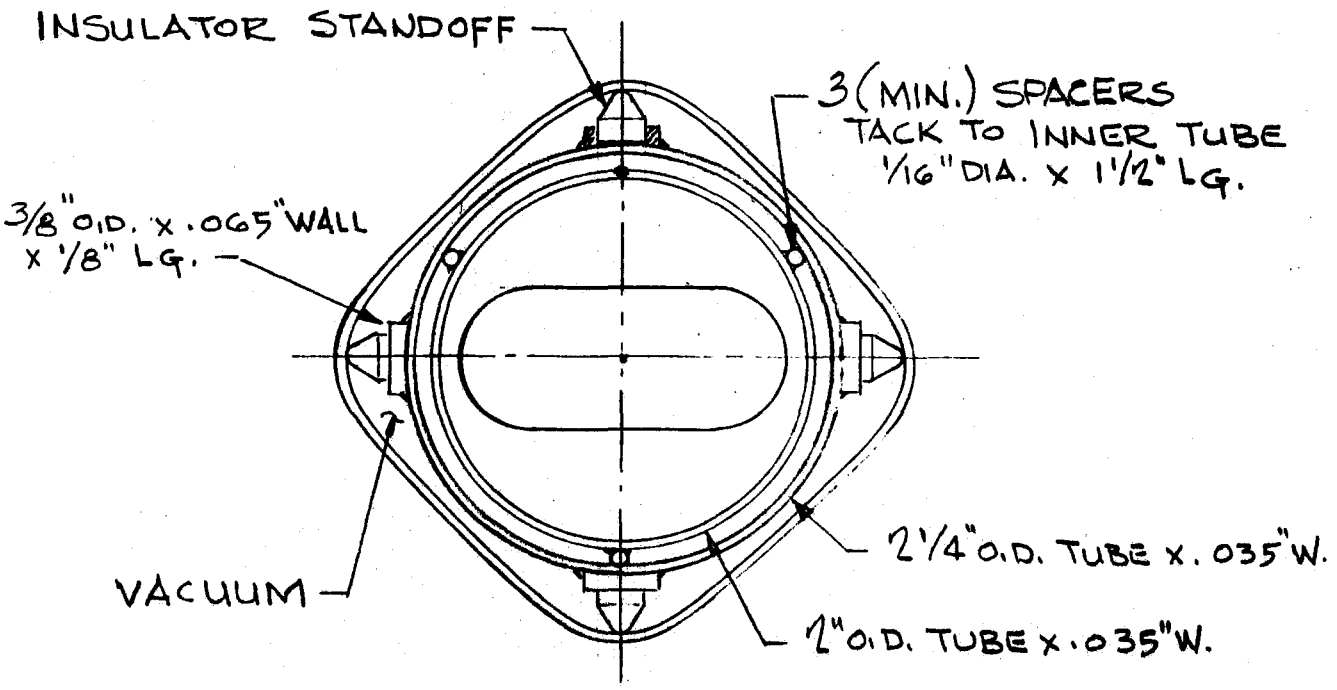

FIG. 5 - DESIGN # 4

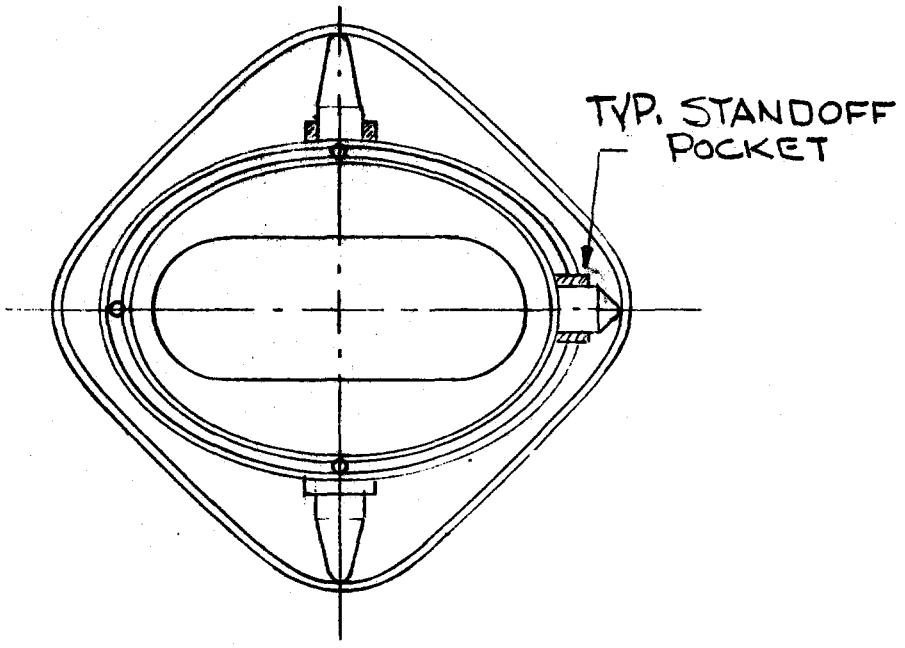

FIG. 6 - DESIGN # 5

Comments:

Both Designs #1 and #2 are advantageous in that no additional extruded extrusions are required. Also, the standoff pockets are provided with only a modification to the punching die. Design #1 provides the greatest mass of heat sink per inch of any of the proposed designs. However, the expansion and soldering of the tubes within the laminations requires suitable facilities to handle the 20 ft beam envelope length.

Design #3 eliminates the necessity to expand and solder tubing to the laminations. Also, expansion of the laminations tends to improve heat conduction to the shield, but two specially extruded tubes must be provided. The standoff captivator rings must be tack welded in place where required.

Designs #4 and #5 utilize more readily available tubing for the nitrogen shield, but sacrifice mass of heat sink to do so.

Table I contains a tabulation of weight per inch, moment of inertia, and deflection (as a function of unsupported length) for the various designs proposed:

TABLE I

Design No.	Figure No.	Weight Lb/In.	I In.^{4}	Vert. Deflection $y'' = f(\ell'')$
1	1	.836	1.785	$2.00 \times 10^{-10}\ \ell^4$
2	2	.662	1.036	$2.80 \times 10^{-10}\ \ell^4$
3	3	.817	1.042	$3.40 \times 10^{-10}\ \ell^4$
4	5	.643	0.951	$2.94 \times 10^{-10}\ \ell^4$
5	6	.529	0.622	$3.70 \times 10^{-10}\ \ell^4$

APPENDIX A

Heat Transfer from Block to Helium Gas

Diam 3/8". Two parallel holes.

See Figure 1.

Cool with high pressure helium gas (20 ata). Gas in at 80°K. Check flow rate versus temperature of block.

1. ΔT gas = 20°K

$\Delta A = 539.1 - 434.4 = 104.7$ J/gr

Flow rate required is: 9.55 g/sec

= 75.74 lb/hr

At 90°K

μ = .0228 lb/hr ft

ρ = .656 lb/cft

Pr = .695 $Pr^{2/3}$ = .735

C_p = 5.235 x .239 = 1.25

d_h = .375" = .031 ft

A = 2 x .000767 = .001534 ft^2

G = 49,374 lb/hr ft^2

Re = 67,131

j = .00249

f = .0050

$$h = \frac{.00249 \times 1.25 \times 49374}{.785} = 196$$

$$\frac{\Delta P}{L} = \frac{.005 \times (13.72)^2}{193 \times .656 \times .375} = .0198 \text{ psig/ft}$$

For L = 20 ft ΔP = .4 psig Okay

Surface Area for Heat Transfer:

$$A = 20 \times 2 \times \frac{.375 \times \pi}{12} = 3.93 \text{ ft}^2$$

$$Q = 1000 \times 3.43 = 3{,}430 \text{ Btu/hr}$$

$$Q = h\ A\ \Delta T_m$$

$$\Delta T_m = \frac{3430}{196 \times 3.93} = 4.45°F$$

The block will have a temperature gradient along its length. Check conduction of heat along block for a temperature gradient of 20°K (no lamination).

Area for heat conduction is approximately:

$$2\text{-}1/8 \times 2\text{-}1/8 - 1/4\ \pi(1)^2 - 3/4 \times 2 - 2 \times 1/4\ \pi(.375)$$

$$4.516 - .785 - 1.500 - .110 = 2.121 \text{ sq in.}$$

$$K = 2\text{-}3 \text{ W/cm °K}$$

$$L = 20 \text{ ft} = 615 \text{ cm}$$

$$A = 13.68 \text{ cm}^2$$

$$Q =$$

$$\Delta T = 20°K$$

$$Q = \frac{2 \times 13.68 \times 20}{615} = .89 \text{ W}$$

No Conduction!!

Temperature of block will be from 82.5 to 102.5°K along its length when helium gas enters at 80°K.

Look at cooling with liquid nitrogen.

TABLE I

Pressure	1 ata	2 ata	3 ata
Temperature, °K	77.36	83.78	88.08
ρ_g, g/cc			
ρ_L, g/cc			
$V_{s\ L}$, cc/gr	1.236	1.287	1.32
$V_{s\ g}$, cc/gr	217.2	114.25	78.08
H_L, J/gr	29.4	42.65	51.6
H_V	228.66	233.2	235.6

To remove 1,000 W of heat, minimum liquid nitrogen flow rate should be:

$$\frac{1000}{228.66 - 29.4} = 5.02 \text{ g/sec}$$

Assume a flow rate of 6 g/sec and calculate heat transfer and pressure drop:

$$G = \frac{6 \times 3600}{454} \times \frac{1}{.001534} = 31{,}015 \text{ lb/hr ft}^2$$

Pressure drop for all liquid flow:

$$\mu_L = .396 \text{ lb/hr ft} \quad \text{(at 1 ata)}$$

$$d_h = .031 \text{ ft}$$

$$Re = \frac{31015 \times .031}{.396} = 2{,}428$$

$$j =$$

$$f = .0097$$

$$\frac{\Delta P}{L} = \frac{.0097 \times (8.615)^2}{193 \times 50 \times .375} = .000199 \text{ psig/ft}$$

Pressure drop for two-phase:

$$X^2 = \frac{Re_g}{Re_L}^{n} \frac{C_L}{C_g} \frac{W_L}{W_g} \frac{\rho_g}{\rho_L}$$

$$\Delta P = \phi^2_{tt} \Delta P_L$$

Calculate ΔP as a function of vapor fraction. See Figure 2.

TABLE II

Vapor Fraction (%)	0	20	40	60	80
Re_L	2,428	1,942	1,457	971	486
Re_g	-	14,712	29,425	44,137	58,848
m	-	.2	.2	.2	.2
n	-	.2	.1	.1	.1
$\frac{Re_g}{Re_L}^{n}$	-	1.499	.00537	.00874	.0185
C_L	-	.046	16	16	16
C_g		.046	.046	.046	.046
C_L/C_g		1	347.8	347.8	347.8
(W_L/W_g)		16	2.25	.444	.0625
ρ_g/ρ_L		.0057	.0057	.0057	.0057
X^2		.1367	.0240	.00769	.00229
X		.370	.155	.0877	.0479
ϕ_{tt} (vt)		7.3	11.2	18	30
ϕ^2_{tt} (vt)		53.29			
ϕ_g vt		2.6	1.7	1.5	1.3

-continued-

TABLE II (Continued)

$\phi^2_{g\,vt}$	6.76	2.89	2.25	1.69
$\left(\frac{\Delta P}{L}\right)_{gas}$ psig	.00096	.00335	.0069	.0016
$\left(\frac{\Delta P}{L}\right)_{mixt.}$ psig	.0065	.0097	.0156	.0196

Determine the type of flow in the tube from the Baker correlation:

$$\psi = \frac{73}{\sigma} \left[\mu_L \left(\frac{62.3}{\rho_L}\right)^2\right]^{1/3}$$

Where:

μ_L = .011 centipoise

σ = 8.74 dynes/cm $(=29.71\ (1 - \frac{T}{T_c})^{1.27}$

ρ = 50.0 lb/cft

For nitrogen at 1 atm, ψ = 2.1509.

$$\chi = \left[\left(\frac{\rho_g}{.075}\right)\left(\frac{\rho_L}{62.3}\right)\right]^{1/2} = 1.755$$

$\chi\psi$ = 3.775

TABLE III

(Figure 3)

Vapor Fraction	0	20	40	60	80
G_L	-	24812	18609	12406	6203
G_g	-	6203	12406	18609	24812
$G_{g/\chi}$	-	3534	7069	10603	14137
$\frac{G_L}{G_g}\chi\psi$	-	15.1	5.66	2.516	.944
Flow Regime	-	Slug	Annular	Annular	Wave

Heat Sink for Beam Tubes

Weight of Aluminum Heat Sink:

Solid Volume $V_s = 2.25^2 \times 20 \times 12 = 1{,}215 \text{ in.}^3$

Void Areas $V_{A_1} = .75 \times 2 \times 20 \times 12 = 360 \text{ in.}^3$

$V_{A_2} = 2\ (.785)\ (.375)^2 \times 20 \times 12 = 53 \text{ in.}^3$

$V_{A_3} = (.5)^2 - .785\ (.5)^2 \times 20 \times 12 = 13 \text{ in.}^3$

Net Volume = 1215 - 360 - 53 - 13 = 789 in.^{3}

Weight = 789 x .098 = 77.3 lb.

Temperature Rise of Heat Sink During Beam Impingement (Without Cooling):

Normal operating temp. of sink = 100°K = T_1

Enthalpy of aluminum at 100°K = 17.76 j/gm

Q = 1 kW = 1,000 joules/sec

$$h_2 = \frac{Q}{m} + h_1 = \frac{1000 \text{ joules/sec}}{35094 \text{ g}} = 17.76 \text{ j/gm}$$

h_2 = 17.788 g/gm

T_2 = 100.3°K

ΔT = .3°K/sec

Heat Transfer from Beam Tube to Heat Sink:

By Radiation.-

$$Q = \frac{A\sigma(e_1\ e_2)\ (T_2^{\ 4} - T_1^{\ 4})}{e_2 + (1-e_2)\ e_1}$$

e_1 = .03 for aluminum

e_2 = .06 for SS 304

T_2 = 100°K

T_1 = 4°K

$\sigma = 0.533 \times 10^{-8}\ W/ft^2\ °K$

$A = \text{Area - } ft^2$

$$\text{Surface Area} = \frac{4 \times 2.25 \times 20 \times 12}{144} = 15\ ft^2$$

$$Q = \frac{15 \times 0.533 \times 10^{-8}\ (.03 \times .06)\ (100^4 - 4^4)}{.06 + (1 - .06)\ .03}$$

$Q = .16\ W$

<u>Support Requirements</u>:

Assume a clearance of 1/16 in. per side.

Total Wt = 77.3 lb.

$$\text{Load/inch - } w = \frac{77.3}{20 \times 12} = .322\ lb/in.$$

The maximum span will be governed by deflection or straightness, whichever is worse case.

For a simply supported beam,-

$$\delta = \frac{5\ wl^4}{384EI} \quad \text{or} \quad l = \sqrt[4]{\frac{384EI}{sw}}$$

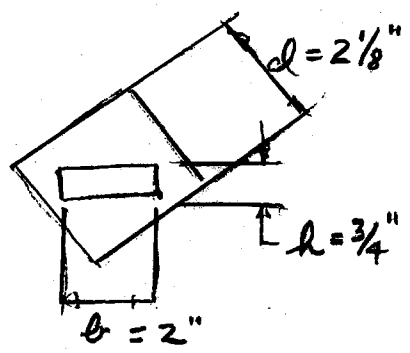

$$I = \frac{d^4}{12} - \frac{bh^3}{12}$$

$$I = \frac{2.125^4 - 2\ (.75)^3}{12}$$

$I = 1.63\ in.^4$

$$l = \sqrt[4]{\frac{384 \times 10 \times 10^6 \times 1.63 \times .03}{5 \times .322}}$$

$l = 103\ in.$

To be safe, install four sets of supports approximately 80 in. apart.

The maximum load at any support location will be:

$P = 80 \times .322 = 25\ lb$

For two support pins at each location, the load per pin is 12.5 lb.

The compressive stress will be limited to 5,000 psi. The required rod size becomes:

$$A = \frac{P}{\sigma} = \frac{12.5}{5000} = .0025 \text{ in.}^2$$

$$d = \sqrt{\frac{A}{.785}} = \sqrt{\frac{.0025}{.785}} = .056'' \quad \text{Too small!}$$

Use a 5/16" OD x 3/16" ID bushing.

$$A = .785\,(.313^2 - .188^2) = .049 \text{ in.}^2 = .317 \text{ cm}^2$$

For nylon bushings, number in contact with 4°K surfaces = 12.

Bushing length for heat transfer equal .3" or .76 cm.

$$Q = \frac{A}{l} \int_4^{100} \lambda \, dt = \frac{12 \times .317 \times .204}{.76} = 1.02 \text{ W}$$