FERMI
national accelerator laboratory

TM-573
2224.000

METHODOLOGY FOR INCREASING THE HORN OF PLENTY PULSE DURATION

E.L.Woods

21 April 1975

1.0 INTRODUCTION

The purpose of this paper is to provide some insight into two methods for increasing the duration of the Horn of Plenty pulse. Initially a pulse transformer was proposed that would work with the existing capacitor bank, and by increasing the capacitor bank voltage transform this voltage into a much longer current pulse for the Horn. The transformer would have to work with very high primary voltages and would be relatively large in size.

An alternative to the pulse transformer is the possibility of leaving the capbank voltage where it is and increase the capacitance of the capacitor bank. In this paper both methods will be discussed with the intent of showing that the capacitor bank increase is an alternative to the pulse transformer for getting the longer pulse duration.

2.0 PULSE TRANSFORMER

Basically the transformer would be a current step up with a turns ratio of 6 to 1. The basic requirements of the transformer are discussed by Frank Nezrick in reference #3. Figure 1 describes these parameters with the addition of approximate physical features.

Upon investigating the actual physical parameters of the transformer with Arnold Engineering of Marengo, Illinois[4], we were able to obtain the following facts. First, the core size would be roughly 36 inches in diameter and 9 feet long; the weight of the core alone would be approximately 12,500 lbs, (see Figure 1). The cost of the transformer core depending on dimensional constraints would be 70¢ to $1 per pound. The core material would be a series of toroid shaped, tape wound rolls of permalloy. Approximately 9 of these toroid tape wound rolls would be stacked to make one transformer core. In addition to the core cost, there would be the mechanical fabrication costs and design costs associated with winding the secondary and primary of the transformer.

Another consideration with the transformer is that the insulating material would have to now withstand at least 15 kilovolts with respect to ground. If the transformer were to be installed in Enclosure 99 the insulation would have to be inorganic (something better than Kapton) or an organic material that would readily stand up to high neutron fluxes. This requirement requires a great deal of consideration, for reliability is vitally important. In addition, this material would probably add substantially to material costs.

The horn power supply would have to work at lower switch currents at much higher voltages. At present we have several ignitrons handling large currents at relatively low voltages. With the new low current requirements it is highly probable that the ignitrons would have difficulty in firing and maintaining proper current levels. (Stacking ignitrons to divide voltages is possible, but requires drastic hardware changes.) Also, at these very high voltages the ignitrons

would have a greater tendency to prefire. Both of these facts strongly suggest modifying the existing firing circuits and switching circuits to one or two ignitrons per bank and the installation of solid state blocking diodes, so that a single capacitor failure would not result in catastrophic power supply failure. This modification further increases the cost of using the pulse transformer.

3.0 INCREASED CAPACITIVE STORAGE

With the large costs and required down time of the pulse transformer, it became apparent that other alternatives should be investigated. By using the present power supply, ignitrons and capbanks, to initially charge the coil to 150 kiloamps and then incrementally discharging large electrolytic capacitors through SCRs, the pulse could be stretched to the desired 1 millisecond.. The circuit principle is identical to the Walker Fast Kicker power supply, and simply expands the number of stages. Figure 2a & b show the equivalent circuit of the horn power supply with the capacitive increase. C_1 is discharged initially through T_1 and at I_{max} the SCRs (1 through n) are fired serially to extend the pulse. At the end of the pulse the crowbar diode D_{CB} dissipates the stored energy in the coil ending the sequence. (Note that the crowbar ignitron has been replaced by a solid state diode.)

The capacitors are readily available as commercial units and have been used in several pulse applications by others.[1,2] They are not physically the size of the existing capacitors because of the low working voltage and thereby lend themselves to be added in a modular format to the existing capacitor banks. Fabrication of this

modification could be done in a very modular form and added incrementally to the existing power supply.

The capacitive storage system is all solid state, can be made virtually with commercially available parts and equipment, and has already been demonstrated as reliable technology. In addition, there would be reduced radiation failure mechanisms because the components would be mounted upstairs in the capbank room in N-1A.

4.0 CONCLUSION

It would seem that by building two pulse transformers (one for the test facility and one for the horn) at a cost in excess of $12,500 each, with power supply downtime required and with virtually no immediate spares available, that the capacitive storage proposal is an alternative worthy of sincere investigation for increased pulse lengths. However, it should be mentioned that if a shorter pulse is acceptable the transformer could become the more feasible solution.

5.0 ACKNOWLEDGMENTS

The author would like to thank Mr. Russell Winje of the Accelerator Division, Mr. William Bang and Mr. Wayne Mitchell of Arnold Engineering, Mr. Walter Praeg of Argonne National Laboratory Accelerator Division, and Mr. Bill Williams of Fermilab Neutrino Section for their very positive input for the material in this memo.

6.0 REFERENCES

1. W.F.Praeg; "A Pulsed and Flat Topped 24 kG·m Beam Switching Magnet System", IEEE Transactions on Magnetics; Vol. MAG-8, No. 3, September 1972, pp. 234-326.

2. W.F.Praeg; "Pulsed Magnet Systems for High Energy Beam Lines", Accelerator Research Facility, Argonne National Laboratory, April 1975.

3. F.A.Nezrick; "Can The Horn System Be Modified to Accommodate a One Millisecond Spill", Fermi National Accelerator Laboratory, TM-536, 2224.000, December 1974.

4. Arnold Engineering Catalog; "Tape Wound Cores, TC-101B", Arnold Engineering 1972.

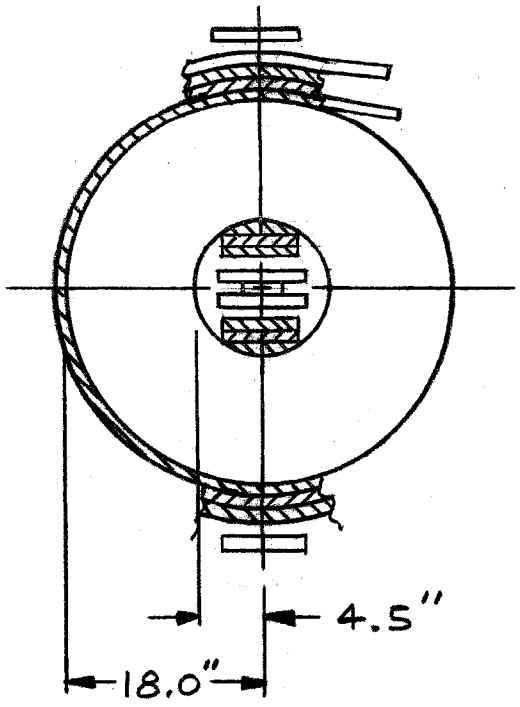

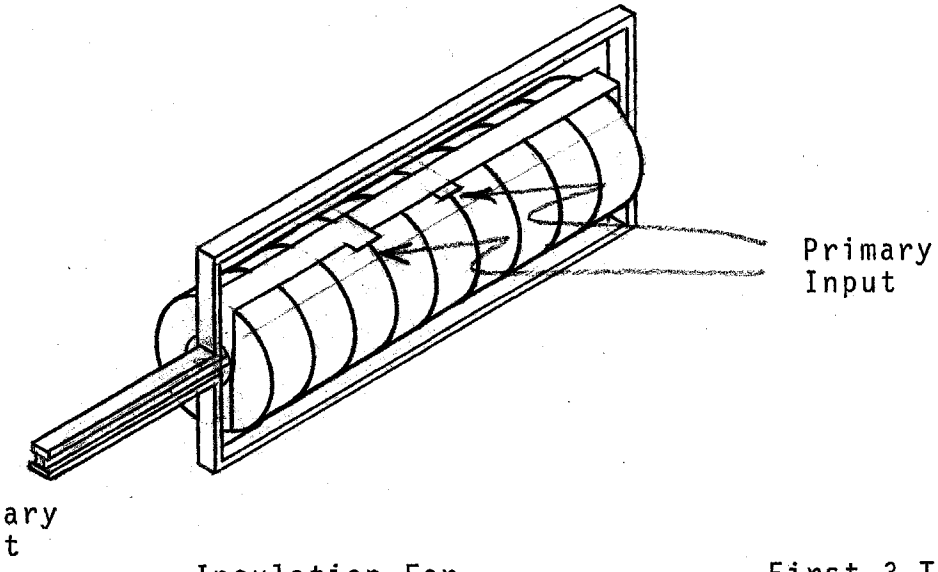

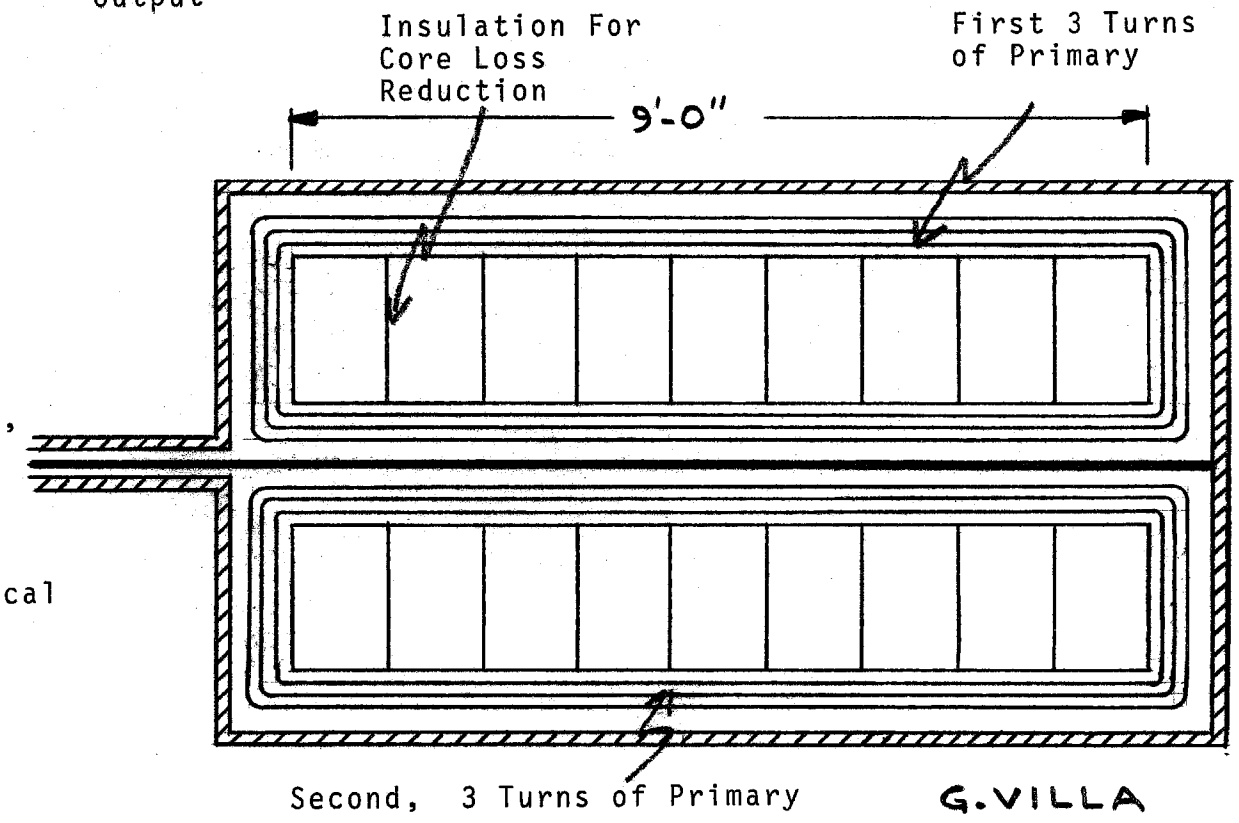

N = 6:1 (current step up)

I_{pri} (pK) = 2500A

V_{pri} (pK) = 15 kV

$t_{1/4}$ - 2500 μsec

Weight of Core = 12,500 lb

Material of Core = 9 Sections of Tape Wound, 4 mil, Unannealed, Permalloy

Figure 1 Estimated Pulse Transformer Physical Description

G. VILLA

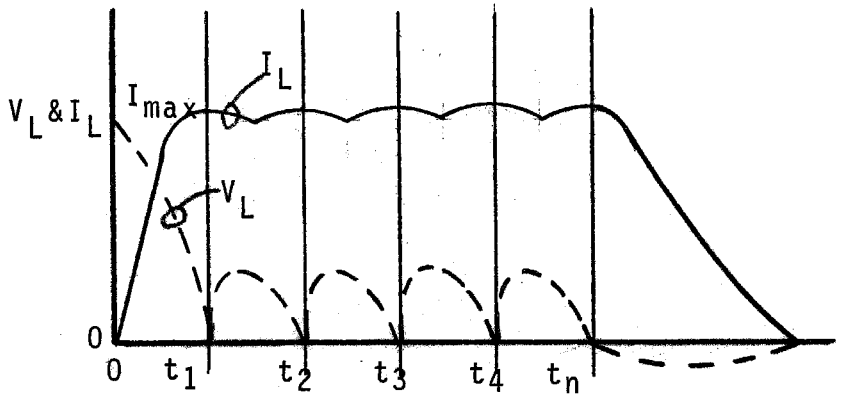

FIGURE 2a
Approximate Voltage and Current Relationship For Proposed Sequential Capacitive Discharge Modification

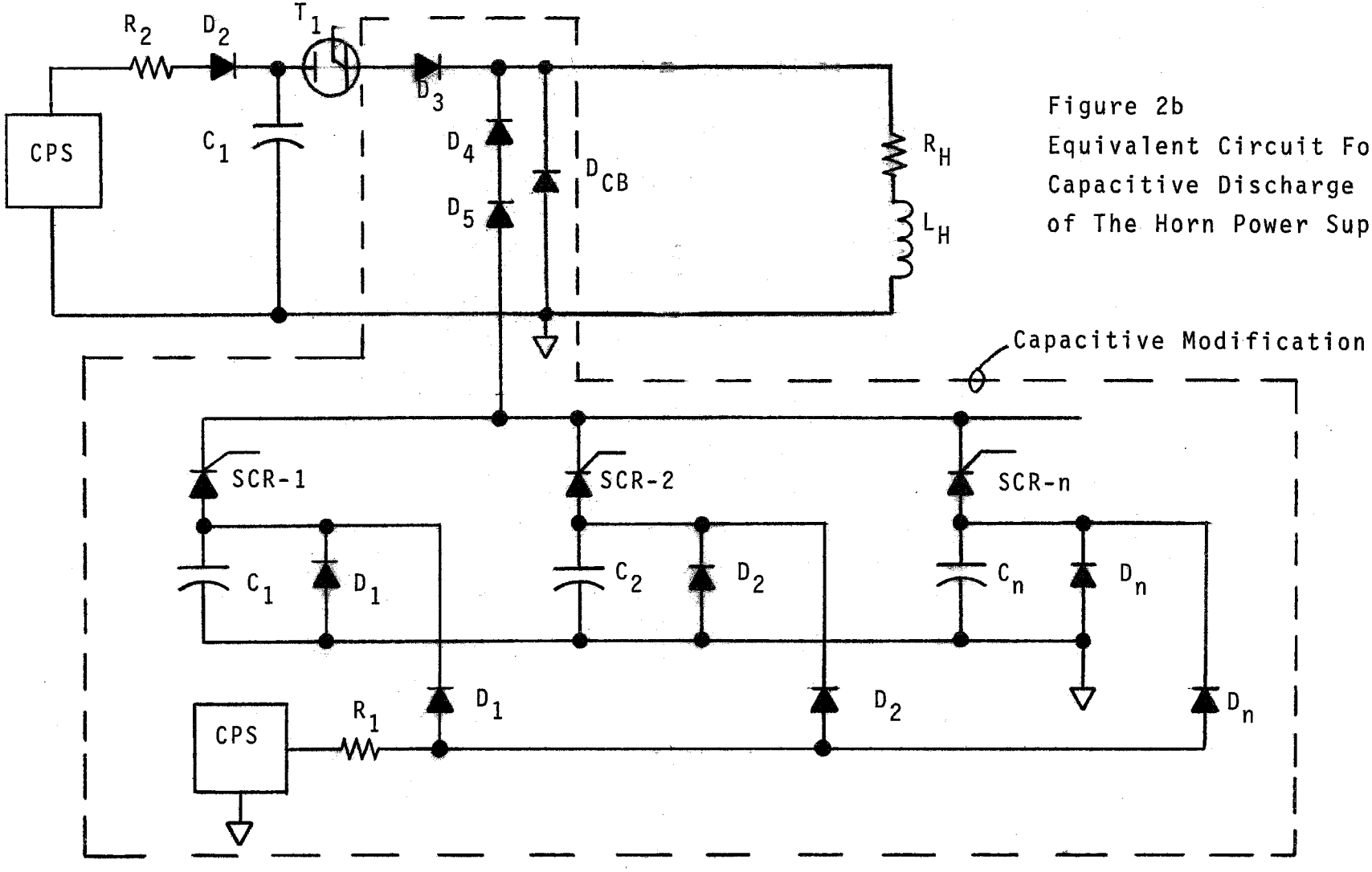

Figure 2b
Equivalent Circuit For Proposed Capacitive Discharge Modification of The Horn Power Supply