national accelerator laboratory

TM-557
0434.040

DIELECTRIC CONSTANT CALCULATIONS FOR AN RF CAVITY CERAMIC SEAL

D.E. Johnson and J.E. Griffin

October 1974

The dielectric constants for a cylindrical ceramic seal are calculated from the measured change in frequency and bandwidth of an octagonal resonant cavity due to the presence of the seal. Several approximations have been made regarding the fields in the cavity and ceramic and the exact shape of the cavity. The resultant calculations yield approximately 1/2% agreement with known results.

1. Nature of Resonant Cavity

The resonant cavity used is an octagonal cavity of non-uniform height, Figure 1. For the purpose of expressing the EM fields inside the cavity, it is assumed to be a regular right cylinder. Thus, the fields take the form of simple Bessel functions. Upon integration of the fields in order to obtain quantities such as stored energy, however, the actual shape of the cavity is taken into account so as to yield an approximately correct volume. It was seen that while the assumption of the cavity as a cylinder of some effective radius was a good one in turns of the contained fields, it was very important to use the exact shape in the volume integrals.

2. The E and H Fields Inside the Cavity and Dielectric

The cavity was assumed to operate in the lowest mode TM_{010} only and the fields without the ceramic were assumed to be pure

Bessel functions. Thus, the two unperturbed fields are (neglecting time dependence):

$$E = \alpha A_0 J_0(Kor)\hat{z}$$
$$H = A_0 J_1(Kor)\hat{\theta} \tag{1}$$

where $\alpha \equiv \sqrt{\mu_0/\varepsilon_o}$, A_0 is a constant, and K_0 is the free space propagation vector. Upon inserting the ceramic, the fields were written for three regions: (1) r<A, the inner radius of the ceramic, (2) A<r<B, inside the ceramic, and (3) r<B, outside the ceramic and within the cavity. The first and third regions have the usual Bessel function solutions:

$$r<A: \quad E_1 = \alpha A_0 J_0(Kr)$$
$$H_1 = A_0 J_1(Kr) \tag{2a}$$
$$r>B: \quad E_3 = \alpha[A_1 J_0(Kr) + A_2 Y_0(Kr)]$$
$$H_3 = A_1 J_1(Kr) + A_2 Y_1(Kr)$$

where A_0, A_1, A_2 are constants, Y(Kr) is the Neumann function, and K is a modified propagation vector.

The fields inside the ceramic should be given by two Bessel functions as in region (3) with different constants and a complex propagation vector K', but the resultant equations can not be easily solved. Instead, the fields were approximated by a Taylor series expansion modified by the presence of a non-unity dielectric constant. They are given by:

$$A<r<B: \quad E_2 = \alpha A_0\left[J_0(KA) - \frac{K}{\varepsilon'} J_1(KA)(r-A)\right]$$
$$H_2 = A_0\left\{J_1(KA) + \frac{K}{\varepsilon'}\left[J_0(KA) - \frac{J_1(KA)}{KA}\right](r-A)\right\} \tag{2b}$$

where ε' is the real part of the relative dielectric constant of the ceramic.

As a check on this approximation, ε' was set to unity and Q of the cavity, calculated from the above fields was found to be in good agreement with Q calculated from the correct fields (Eq. 1).

3. Calculation of the Dielectric Constants

The rest of the program involves the relatively straightforward if non-trivial integration of the fields of Eqs. 2 to get the desired quantities and a rather length, iterative computer program to actually determine these quantities. A few details and problems encountered are mentioned below:

3.1 Cavity Volume

The actual plane area of the octagon was calculated and from this an effective circular radius (Reff) was determined. The effective radius was then used as the outer boundary of the cavity. A height function was determined which was constant from r = 0 to r = B, and then sloped down in region (3). This was a function of r and was integrated over in the volume integral.

3.2 Boundary Conditions and Propagation Vector

The boundary conditions at r = A, r = B and r = effective outer radius were solved. The first two gave the unknown constants A_1 and A_2 in terms of A_0 as an involved function of the propagation vector K. The third gave a relation of K to the constants A_1 and A_2 (i.e., E_3 (Reff) = 0). Both of these also involve the relative dielectric constant ε'. A trial ε' was assumed and then the boundary conditions were interated until the change in K was less than a certain level. This K was then used to determine a

new ε' which in turn was put into the boundary conditions and looped over to get a new K. This whole process was repeated until both quantities were determined to some specific degree of accuracy.

3.3 $\underline{\varepsilon'}$

ε' was determined from the exact formula:

$$\frac{\Delta\omega}{\omega} = \frac{\varepsilon_0(\varepsilon'-1) \int E_1 E_0^* \, d\tau_{\text{dielectric}}}{2\varepsilon_0 \int E_1 E_0^* \, d\tau_{\text{total volume}}}$$

where ω and $\Delta\omega$ are the original frequency and change in frequency, E_0 is the electric field with no ceramic, and $d\tau$ a volume differential. The following approximations were made:

a. In the numerator, the fields were given by Eq. 1 for E_0 and Eq. 2b for E.

b. The denominator was taken as: $2\varepsilon_0 \int |E|^2 \, d\tau$

with
$$E_1 = \alpha A_0 J_0(Kr)$$
$$E_2 = \alpha A_0 [J_0(KA) - K\, J_1(KA)(r-A)]$$
$$E_3 = \alpha [A_1 J_0(Kr) + A_2 Y_0(Kr)]$$

and K and A_1 and A_2 determined using the calculated value of ε'. This was judged to be the best, not extensively hard approximation which could be made. Using Eqs. 1 and 2 would have been considerably harder and would not have changed the final result greatly.

3.4 $\underline{\varepsilon''}$

To find the imaginary part of the relative dielectric constant, ε'', first $Q_0(\varepsilon' = 1, K = K_0)$ was calculated from $Q_0 = \omega_0 W_0 P_0$ with ω_0, W_0, P_0 being original frequency, stored

energy, and power loss in walls. From this and the measured shifted frequency and bandwidth, the surface resistance of the walls was found. Then the two parts of the actual Q were calculated.

$$Q_{lossy} = \omega W/P_{lossy}$$

$$Q_{non\text{-}lossy} = \omega W/P$$

and $$Q = (1/Q_L + \frac{1}{Q_{n-1}})^{-1}$$

4. Conclusions

A computer program to determine the real and imaginary parts of a ceramic seal's dielectric constant has been created. The input parameters to it are the dimensions of the ceramic, the resonant frequency and bandwidth of the cavity with the ceramic inside. From these the dielectric constant of the ceramic can be calculated. Tests run on materials having a known dielectric constant yield an accuracy of approximately 1/2%.

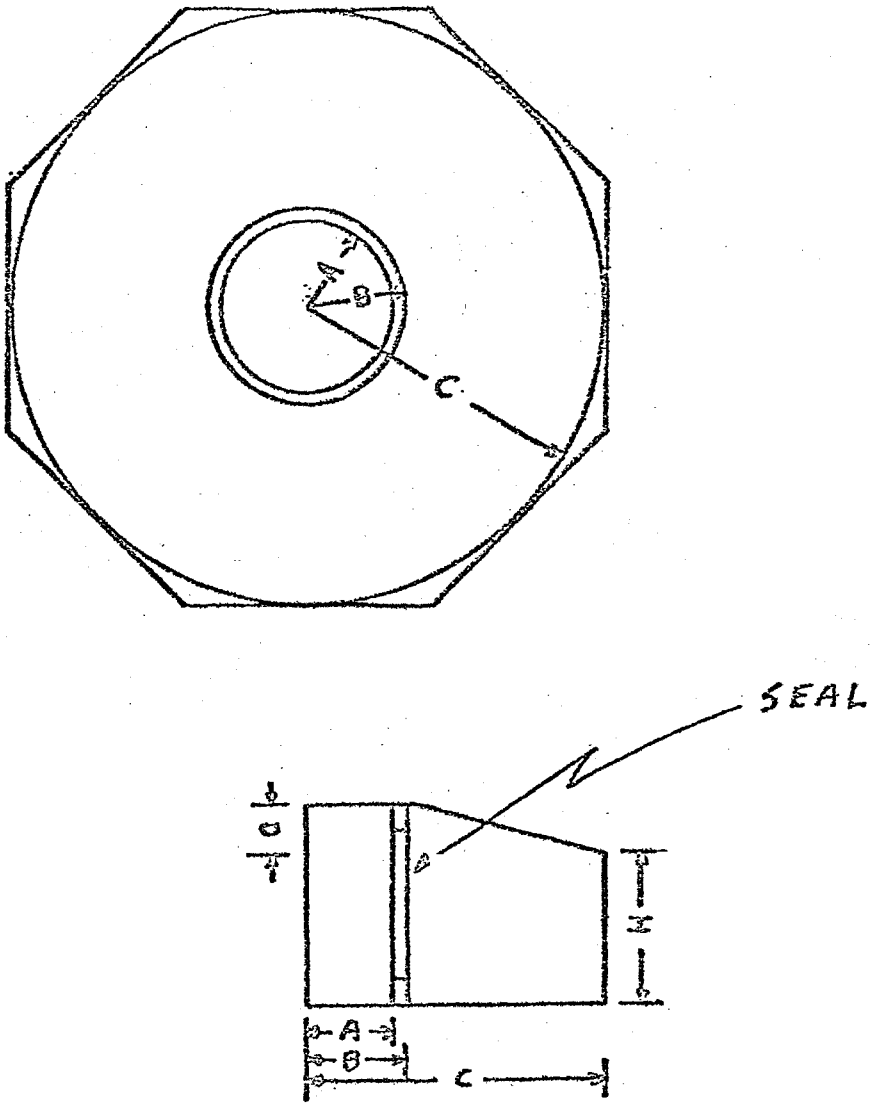

FIGURE 1 - TEST RESONANT CAVITY WITH SEAL. NOT TO SCALE.

```
      REAL K,K0
      COMMON/FUNC/A1,A2,K
      COMMON/FUNCB/AJ0,AJ1,AK,E1,A
      TYPE 15
   15 FORMAT(' PROGRAM TO CALCULATE DIELECTRIC CONSTANTS'/)
   11 CONTINUE
      TYPE 16
   16 FORMAT(/' PLEASE ENTER ORIGINAL FREQUENCY AND BAND WIDTH
     & IN THE FORM :                FREQUENCY/BAND WIDTH'/)
      ACCEPT 5,F0,F0BW
      TYPE 17
   17 FORMAT (' NOW ENTER SECOND FREQUENCY AND BAND WIDTH
     & IN THE SAME MANNER'/)
      ACCEPT 5,F,FBW
      A=.187325
      B=.200025
      DR=1.19729
      X=.50034
      H=.254
      DH=.009525
      HR=.0008128
      PI=3.141593
      U0=PI*4.0E-7
      D=(8.*DR*X/PI)**.5
      IFLAG=0
      VOL=PI*(B**2*(H+DH)+(DR**2-B**2)*(H+DH+B*DH/(D-B)-2.*DH*(DR**3-B**
     &   3)/3.)+H*(8.*DR*X-PI*DR**2))
      VDIEL=PI*(B**2-A**2)*(H+DH-2.*HR)
      K0=2.40483/D
      DK0=D*K0
      AK0=A*K0
      CALL BESJN(DK0,DJ1,1)
      CALL BESJN(AK0,AJ0,0)
      E1=2.*(DJ1/AJ0)**2*((F0-F)/F0)*VOL/VDIEL+1.
      K=1.97
      DELTAK=1.E-6
      ENEW=E1
      E1=1.
    1 EOLD=ENEW
      AK=A*K
      BK=B*K
      DK=D*K
      CALL BESJN(AK,AJ0,0)
      CALL BESJN(AK,AJ1,1)
      CALL BESJN(BK,BJ0,0)
      CALL BESJN(BK,BJ1,1)
      CALL BESJN(DK,DJ0,0)
      CALL BESYN(BK,BY0,0)
      CALL BESYN(BK,BY1,1)
      CALL BESYN(DK,DY0,0)
      A1=(AJ1*BY0-AJ0*BY1+K*(B-A)/E1*(AJ0*BY0-AJ1/AK*BY0+AJ1
     &   *BY1))/(BJ1*BY0-BJ0*BY1)
      A2=(AJ0-K*AJ1/E1*(B-A)-A1*BJ0)/BY0
      ANS=A1*DJ0+A2*DY0
      IF(ABS(ANS).GE.DELTAK) K=K+ANS
      IF(ABS(ANS).GE.DELTAK) GO TO 1
    2 E1=ENEW
      IF(IFLAG.EQ.0) E1=1.
      M=50
      DW=0.
```

```
      DELB=(B-A)/M
      DO 20 J=1,M
   20 DW=DW+(FUNB(A+DELB*J)+FUNB(A+DELB*(J-1)))*DELB/2.
      DW=DW*(H+DH-2.*HR)
      AJØS=AJØ**2
      AJ1S=AJ1**2
      BJØS=BJØ**2
      BJ1S=BJ1**2
      DJØS=DJØ**2
      DJ1S=DJ1**2
      BYØS=BYØ**2
      BY1S=BY1**2
      DYØS=DYØ**2
      DY1S=DY1**2
      DIF2=(B**2-A**2)/2.
      DIF3=(B**3-A**3)/3.
      DIF4=(B**4-A**4)/4.
      EØ1=1.
    3 CONTINUE
      W1=A**2/2.*(AJØS+AJ1S)*(H+DH)
      W2=(H+DH-2.*HR)*EØ1*(AJØS*DIF2-2.*K/EØ1*AJØ*AJ1*(DIF3-A*DIF2)
     &   +(K/EØ1)**2*AJ1S*(DIF4-2.*A*DIF3+A**2*DIF2))
      W3=(H+DH+B*DH/(D-B))*(A1**2*(D**2/2.*(DJØS+DJ1S)-B**2/2.*(BJØS
     &   +BJ1S))+2.*A1*A2*(D**2/2.*(DJØ*DYØ+DJ1*DY1)-B**2/2.*(BJØ*BYØ
     &   +BJ1*BY1))+A2**2*(D**2/2.*(DYØS+DY1S)-B**2/2.*(BYØS+BY1S)))
      W4=Ø.
      N=1ØØ
      DEL=(D-B)/N
      DO 1Ø I=1,N
   1Ø W4=W4+(FUN(B+DEL*I)+FUN(B+DEL*(I-1)))*DEL/2.
      W4=-DH/(D-B)*W4
      IF(IFLAG.EQ.Ø) GO TO 22
      IF(IFLAG.EQ.2) GO TO 24
      ENEW=(FØ-F)/FØ*2.*(W1+W2+W3+W4)/DW+1.
      DELTE=.Ø1
      IF(ABS(ENEW-E1).GE.DELTE) GO TO 2
      E1=ENEW
      IF(ABS(EOLD-ENEW).GE.DELTE) GO TO 1
      TYPE 25,E1
   25 FORMAT (' EPSILON PRIME IS              F/)
   22 CONTINUE
      CALL BESJN(AK,AJ2,2)
      CALL BESJN(BK,BJ2,2)
      CALL BESJN(DK,DJ2,2)
      CALL BESYN(BK,BY2,2)
      CALL BESYN(DK,DY2,2)
    4 P1=A**2*(AJ1S-AJØ*AJ2)
      P2=2.*(AJ1S*DIF2+2.*K/EØ1*AJ1*(AJØ-AJ1/AK)*(DIF3-A*DIF2)+(K/EØ1)
     &   **2*(AJØ-AJ1/AK)**2*(DIF4-2.*A*DIF3+A**2*DIF2))
      P3=A1**2*(D**2*(DJ1S-DJØ*DJ2)-B**2*(BJ1S-BJØ*BJ2))+2.*A1*A2*(D**2*
     &   (DJ1*DY1-.5*(DJØ*DY2+DJ2*DYØ))-B**2*(BJ1*BY1-.5*(BJØ*BY2+BJ2*
     &   BYØ)))+A2**2*(D**2*(DY1S-DYØ*DY2)-B**2*(BY1S-BYØ*BY2))
      P4=4./PI*DR*X*H*(A1*DJ1+A2*DY1)**2
      IF(IFLAG.NE.Ø) GO TO 23
      W1Ø=W1
      W2Ø=W2*(H+DH)/(H+DH-2.*HR)
      W3Ø=W3
      W4Ø=W4
      P1Ø=P1
      P2Ø=P2
```

```
      P30=P3
      P40=P4
      IFLAG=1
      E1=ENEW
      GO TO 1
   23 CONTINUE
      E01=E1
      IFLAG=2
      GO TO 3
   24 CONTINUE
      RES=2.*PI*F0BW*U0*(W10+W20+W30+W40)/(P10+P20+P30+P40)
      E2=(FBW*2.*PI*U0*(W1+W2+W3+W4)-RFS*(P1+P2+P3+P4))/(2.*PI*F*U0*(W2
     &   /E01))
      TYPE 35,E2
   35 FORMAT(' EPSILON DOUBLE PRIME IS  ',F/)
      TANG=E2/E1
      TYPE 45, TANG
   45 FORMAT(' LOSS TANGENT IS          ', F)
    5 FORMAT (2F)
      GO TO 11
      STOP
      END
      FUNCTION FUN(X)
      COMMON/FUNC/A1,A2,SK
      XK=X*SK
      CALL BESJN(XK,XJ0,0)
      CALL BESYN(XK,XY0,0)
      FUN=(A1*X*XJ0+A2*X*XY0)**2
      RETURN
      END
      FUNCTION FUNB(X)
      REAL K
      COMMON/FUNCB/AJ0,AJ1,AK,E1,A
      K=AK/A
      XK=X*AK/A
      CALL BESJN(XK,XJ0,0)
      FUNB=(AJ0-K*AJ1/E1*(X-A))*XJ0*X
      RETURN
      END
      SUBROUTINE BESJN(Z,JN,N)
      REAL JN
      Q=1.0E-06
      X=-.25*Z*Z
      A=1.0
      IF(N.EQ.0) GO TO 3
      NN=1
      DO 2 I=1,N
    2 NN=NN*I
      AN=NN
      A=((.5*Z)**N)/AN
    3 P=0.0
      JN=A
      B=N
    1 P=P+1.
      A=A*X/(P*(P+B))
      JN=JN+A
      ACC=A/JN
      IF(ABS(ACC).GT.Q) GO TO 1
      RETURN
      END
```

```
      SUBROUTINE BESYN(Z,YN,N)
      O=1.7E-06
      PS=-0.57721567
      PSN=PS
      AN=1.
      NN=1
      YN=0.0
      X=.25*Z*Z
      IF(N.EQ.0) GO TO 5
      N1=N-1
      A=-((2./Z)**N)/3.141593
      IF(N1.LE.1) GO TO 2
      DO 3 I=1,N1
    3 NN=NN*I
      AN=NN
      A=A*AN
    2 YN=YN+A
      IF(N1.EQ.0) GO TO 1
      DO 4 K=1,N1
      P=K*(N-K)
      A=A*X/P
    4 YN=YN+A
    1 AN=NN*N
      DO 6 K=1
      AK=K
    6 PSN=PSN+1./AK
    5 X=-X
      AL=2.*ALOG(.5*Z)
      A=(.5*Z)**N
      A=A*(AL-PS-PSN)/(AN*3.141593)
      YN=YN+A
      K=0
    7 K=K+1
      PP=K*(N+K)
      PT=PS
      PTN=PSN
      BK=K
      CK=K+N
      PS=PS+1./BK
      PSN=PSN+1./CK
      A=A*X*(AL-PS-PSN)
      A=A/(PP*(AL-PT-PTN))
      YN=YN+A
      ACC=ABS(A)/ABS(YN)
      IF(ACC.GT.O) GO TO 7
      RETURN
      END
```