TM-522
2750.000

national accelerator laboratory

ENGINEERING DESIGN & ANALYSIS OF LARGE SUPERCONDUCTING PARTICLE ANALYSIS MAGNETS

J. Heim

October 3, 1974

ABSTRACT

Superconducting magnet technology is one phase of applied superconductivity where significant electrical power savings may be appreciated. Furthermore, these power savings may be gained without sacrificing reliability of operation or initial capital costs. This paper describes the design and construction of 4 large superconducting dipole magnets which are being used at Fermi National Accelerator Laboratory to conduct high energy physics experiments. Two of these magnets have been built and operated continuously for several months prior to installation in beam lines. Two larger superconducting dipoles are presently under construction and both magnets will be completed this year. All magnets are designed to operate continuously without special attention consuming approximately 10% of the power which would be demanded by a conventional magnet. The engineering concept and construction techniques are described.

I. INTRODUCTION

Great power savings are gained by replacing conventional magnets with efficient superconducting magnets. However, one should not be misled by calculating operating efficiency by looking at the electrical power fed to the magnet through the

power supply only. The dominant operating cost for most superconducting magnets is the power used to reliquify the boil-off helium coolant. The following paper describes the basic concept used to build several large superconducting dipole magnets which are both efficient and reliable. All magnets are designed to operate continuously with helium and nitrogen "topped-off" once per week. Magnet size and operating range as shown below.

field volume	4-16 kilogauss meters cubed
total weight	65-165 metric tons
stored energy	300-2000 kilojoules
full field	18-20 kilogauss
operating current	200 amperes D. C.
nitrogen storage	170-200 liquid liters
nitrogen use rate	18-25 liters per day
helium storage	500-600 liquid liters
helium use rate	36-50 liters per day

II. PROGRAM GOALS

The first phase of the program was to develop a prototype superconducting magnet which would be the equivalent of an existing conventional magnet. We decided to make the superconducting prototype the same size as the conventional version to avoid scaling problems. The primary goals of the project were then defined as follows:

EFFICIENCY - overall power consumption for continuous operation less than 10% of the conventional magnet

RELIABILITY - no more "down time" than the conventional magnet

COST - initial capital costs about the same

III. ENGINEERING CONCEPT

To achieve the above goals the concept evolved to the following design considerations.

(1) Heat transfer into the liquid helium environment must be reduced to a minimum without sacrificing reliability or cost.

(2) If liquid helium consumption can be reduced to a low level, the helium vessel can be sized to store enough liquid helium above the coil so that the time period between liquid helium refills becomes long. A periodic refill system of supplying liquid helium to the magnet can then be used and the cost and complication of including a helium refrigerator as part of the magnet system is eliminated.

(3) The current path connecting the power supply to the coil is a major heat leak. This loss can be eliminated by operating the coil in persistent mode with current leads removed or reduced to a low level by using a flux pump. However, both of these methods are more complicated than a vapor cooled current lead system. Therefore, vapor cooled current leads were chosen but low currents are used to reduce current lead losses to an acceptable level and also reduce the cost of a power supply.

(4) The vapor cooled current lead should be the only helium vessel outlet and all exiting vapor flows through that outlet. Even during helium filling operations, the exiting vapor assures current lead cooling.

(5) A liquid nitrogen cooled radiation shield is used. The liquid nitrogen storage volume is sized so that the time period between refills is the same as the helium system.

(6) The field shaping iron is outside the cryostat at room temperature. The iron may then be separated from the cryostat and disassembled into smaller pieces for transport.

(7) Picture frame iron and saddle shaped coils are used with the helium shell assuming a complicated shape. This complicated shape was chosen to keep the liquid helium volume around the coil to a minimum. The useful helium storage is then located above the coil so that the coil is always immersed in liquid helium.

(8) All vessel walls are made from steel plate with corner welds on assembly. With good welding the cryopumping capability of the helium vessel wall should maintain insulating vacuum integrity indefinitely. To further assure long term static vacuum, containers of activated charcoal are mounted on the helium vessel wall, i.e., continuous pumping with a mechanical vacuum pump is not required and system reliability is improved.

IV. COIL DESIGN

For our application coil volume is not a severe constraint and the design approach used was straight forward. Since superconducting coil stability is a strong function of conductor temperature, the approach used was to develop a coil design which maximizes the coil conductor surface area in direct contact with the helium coolant.

Wire Size

If we assume that a fixed volume of conductors will be used to build a known size coil and the number of ampere turns is to remain constant, the heat generated due to electrical

losses in the copper during the charge and discharge transients also remains constant, i.e., if we neglect secondary effects, heat generation in the coil is independent of the conductor size. However, heat transfer between the conductor and coolant is a function of conductor size since it is directly related to the conductor surface area exposed to liquid helium. Therefore, we can express coil cooling capability with respect to conductor size as

$$(1)\quad \text{cooling capability} = \frac{\dot{Q}_{cooling}}{\dot{Q}_{heating}} = f\left(\frac{1}{d}\right) = f\left(n^{\frac{1}{2}}\right)$$

where $\dot{Q}_{cooling}$ = coil surface cooling rate

$\dot{Q}_{heating}$ = coil heat generation rate

d = conductor cross section dimension (diameter for round wire)

n = number of coil turns

Equation (1) shows that a coil construction which uses many turns of small size wire to develop the required number of ampere turns has good cooling capability. Also, current lead losses suggest that small wire size would be a wise dicision. Therefore, it was decided that small diameter round wire would be the best choice. The final decision as to wire size was then determined by power supply considerations and magnet charge time.

Coil Construction

The idea that overcooling guarantees stability was used again to design the coil assembly. The method of construction is shown in figure 1.

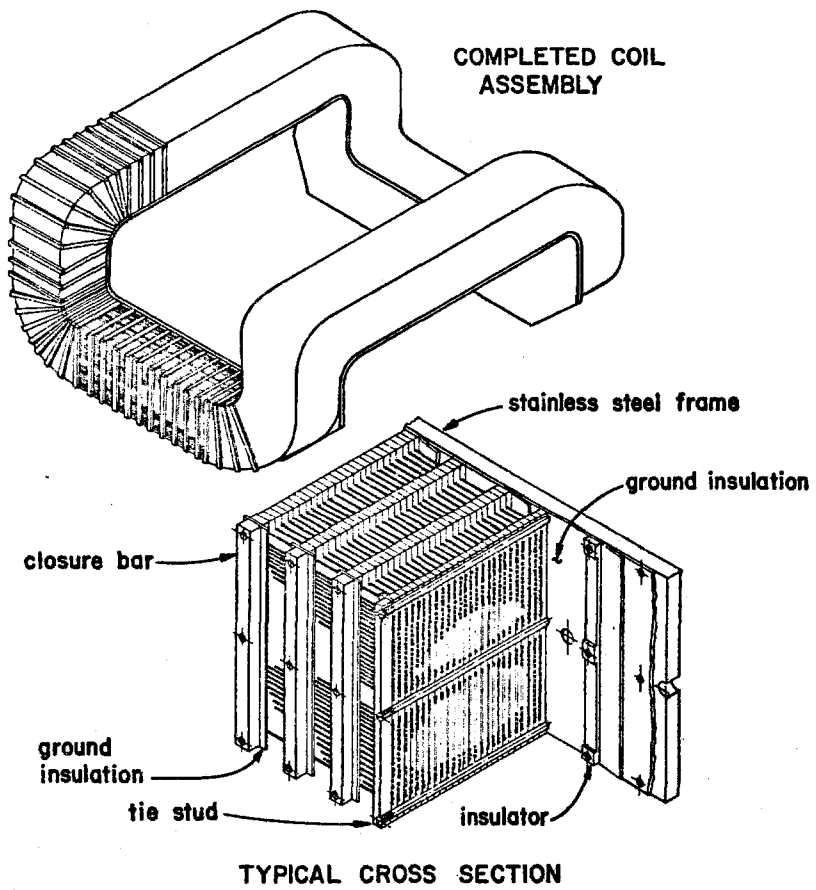

Fig. 1. Coil Construction

Coils are wound on a stainless steel frame using round wire and epoxy glass laminate insulators which are spaced approxiamtely 5 cm. center to center. The insulators also serve as coil layer clamping members and remain as part of the coil assembly. In this manner the wire remains tightly clamped as we progress from layer to layer. The completed coil assembly is saddle shaped and rectangular in cross section with 3 tie studs clamping each stack of layer spacing insulators directly to the steel frame. After the coil is wound stainless steel closure bars are installed and all tie studs are torqued. Some of the advantages of this type of construction are:

(1) Small diameter wire is easy to wind.

(2) The coil structure is well defined and readily analyzed, i.e., the insulators are the load bearing members which transmit the electro magnetic forces through the coil structure. Individual conductors are treated analytically as a continuous beam on multiple supports.

(3) With this type of coil construction liquid helium contacts all wire surfaces which enhances stable coil performance.

(4) Layer to layer shorts are almost impossible with a spacing of 2 or 3 wire diameters between layers. Insulator thickness (layer spacing) is governed by the stiffnes required to keep the coil clamped tightly during winding.

(5) Turn to turn shorts do not present a problem since the turn to turn voltage drop is so small.

$$\text{Voltage drop} = \frac{\text{Coil applied voltage}}{\text{number of turns}}$$

(6) Coil to ground insulation is easily installed. Epoxy glass laminate strips are installed as shown in fig. 1.

(7) The thermal contraction of the composite coil assembly may be designed to match the stainless steel frame and helium shell as closely as required.

V. HELIUM VESSEL

The helium vessel is made from 304 stainless steel plate and assembled around the coil as shown in figure 2.

The coil is attached to the vessel wall with tie studs as shown. All tie studs are insulated from the coil by cylindrical insulators which slip over the stud after the stud is threaded into the shell wall. The coil to shell tie

studs are then torqued and the coil closure bars are welded to the shell wall as shown. The remaining plates are then added and the helium vessel welding is completed.

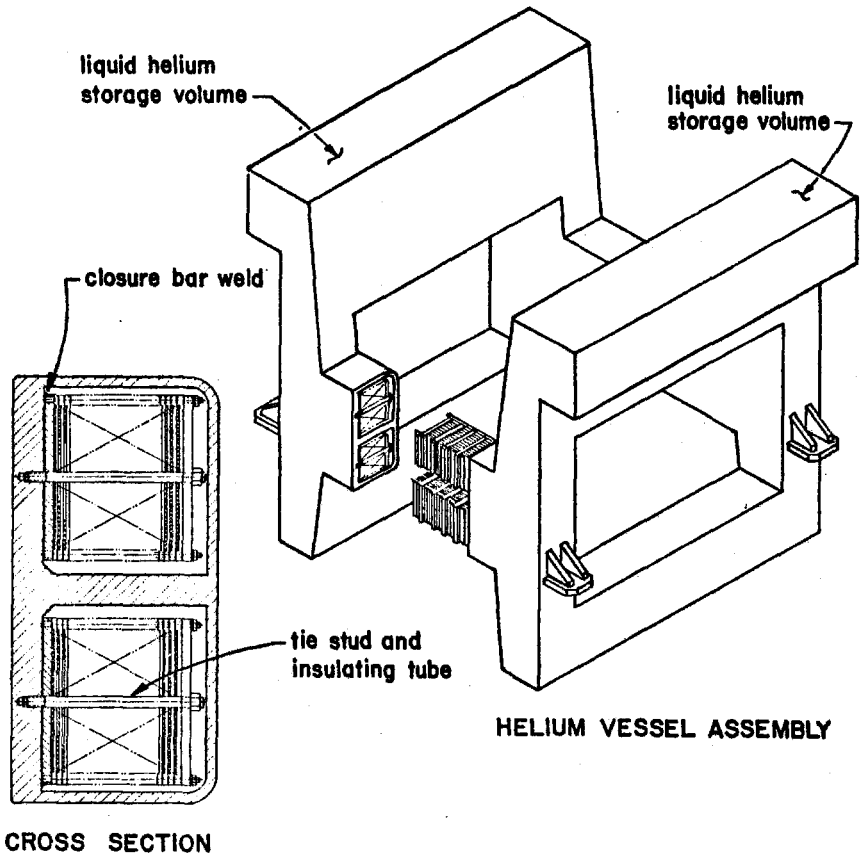

Fig. 2 Helium Vessel

VI. LIQUID NITROGEN RADIATION SHIELD

The nitrogen vessel and vessel supports are made of 304 stainless steel plate and the remaining shell is made of thin copper sheet as shown in figure 3.

The nitrogen shield is fabricated using threaded fasteners and then disassembled and reassembled around the helium vessel. Coolant tubes are soft soldered to the copper with all tubes sloping up toward the vessels. Nitrogen vapor generated inside the coolant tubes then flows up the coolant tube into the vessel

ullage space. Both liquid nitrogen storage vessels are vented by overflow lines as shown in fig. 3. Forty layers of super-insulation are wrapped onto both the helium vessel and nitrogen shield as shown in fig. 4.

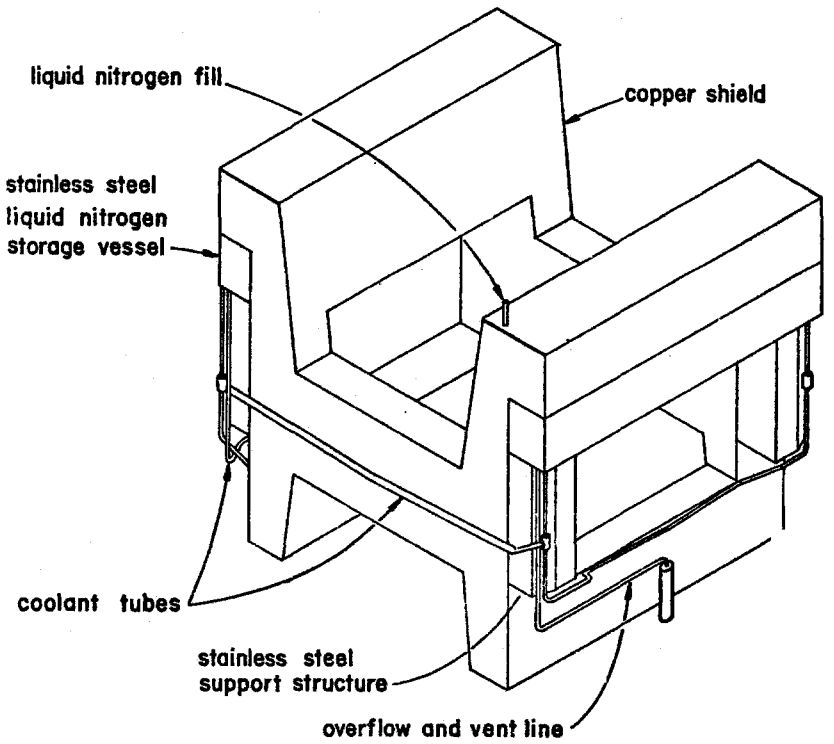

Fig. 3 Radiation Shield

VII. VACUUM JACKET AND SUPPORT SYSTEM

The outermost shell is made of mild steel and/or stainless steel. The shell is made up as several weld subassemblies which are then assembled around the nitrogen shield as shown in figure 4.

One of the 4 support columns[1] are also shown in figure 4. All 4 columns use flexural hinges both top and bottom to compensate for differential contraction between the helium vessel and outer shell. This low loss support system contributes less than 0.1 watts to the helium boil-off. Four steel shipping

columns are installed as shown when the magnet is being transported.

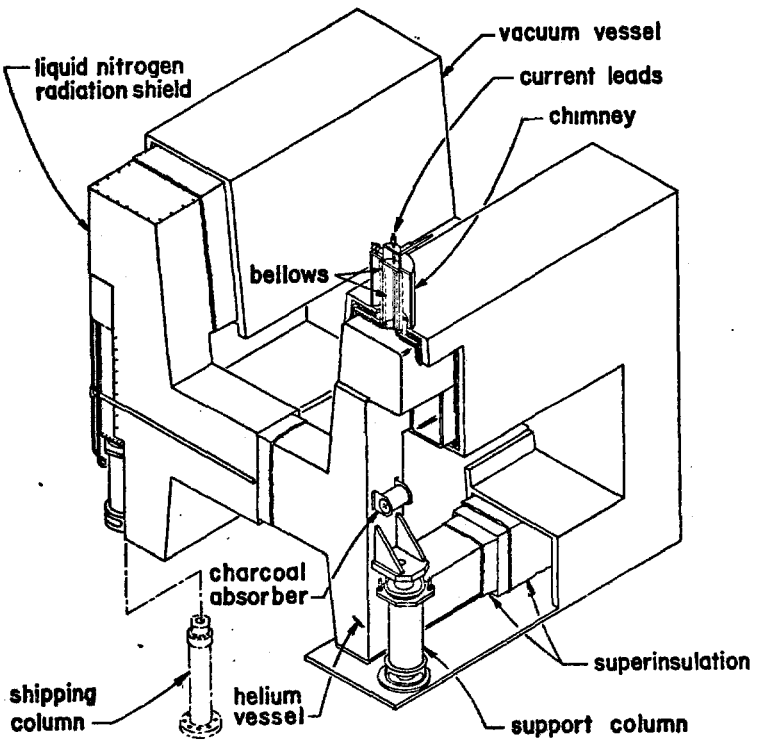

Fig. 4 Vacuum Jacket

VIII. HELIUM RECLAIMATION SYSTEM

The helium system is shown in figure 5. The ullage spaces of the two helium storage vessels are tied together with a vent tube as shown. A small heater is installed in the vent tube sump to vaporize any liquid helium that might enter the vent tube. The heater system senses liquid helium collecting in the vent tube sump and switches on automatically.

Helium vapor exits the cryostat through the current lead and enters a gas bag which serves as a buffer volume. A high pressure compressor pumps the helium out of the gas bag into a tube trailer. When the tube trailer is full it is transported to the helium liquification station and replaced with an empty trailer.

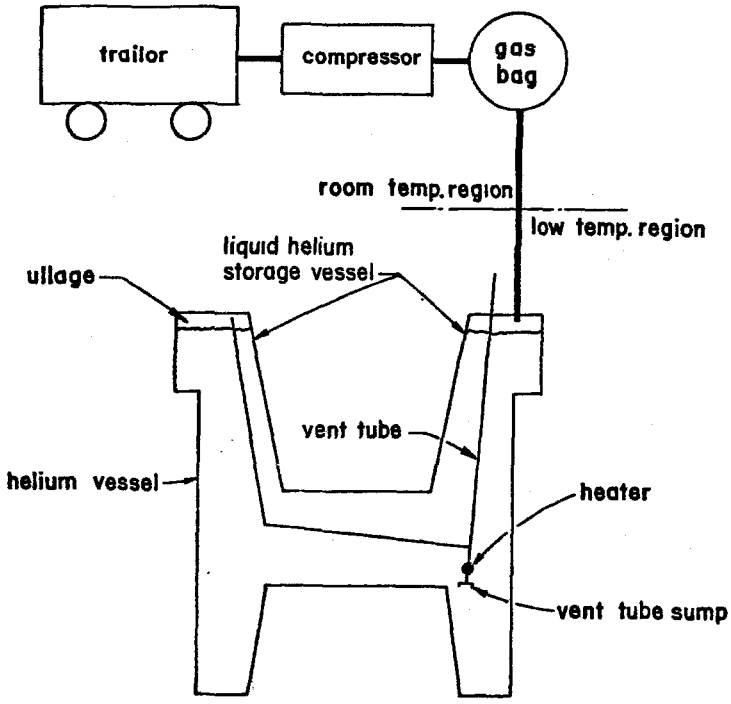

Fig. 5 Helium Reclaimation System

IX. CURRENT LEAD AND CHIMNEY

Helium vapor flow over the current carrying conductors leading into the liquid helium environment must be maintained for reliable magnet operation. The exiting vapor cools the current lead conductors by intercepting the heat generated by electrical losses within the conductor (joule heating). The current lead to exiting vapor heat exchange must be maintained or the current lead conductors "over heat" with excessive conductor temperatures leading to failure.

After serious consideration as to the above failure potential, we decided that the best solution was to have one helium vessel outlet only so that all exiting helium vapor must flow over the current leads. The current lead flow cross

sectional area was then sized to carry the helium exit vapor flow rates expected during helium fill operations.

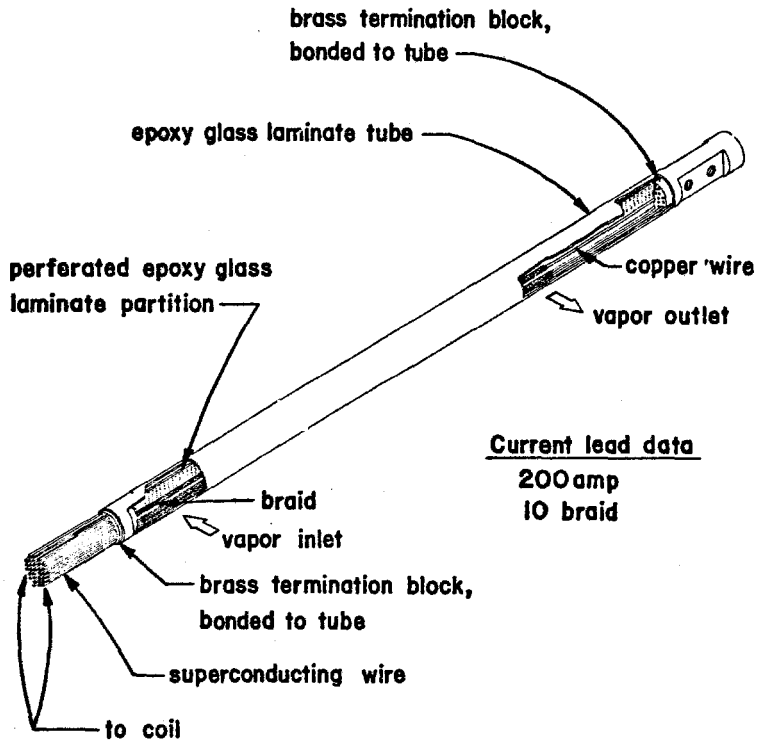

Fig. 6 Current Lead

The current lead design is shown in figure 6. The current carrying elements were sized using Efferson's[2] criteria which leads to a conservative design in that the vapor flow through the lead is greater than that generated by the current leads only i.e., the vapor generated by other heat leaks also exits through the current leads. Both the in and out current paths have been incorporated into one tube to achieve a more compact design. The parallel flow channels are separated with a perforated partition (vector board) which allows pressure communication between flow channels to accomplish interchannel flow balance. Both the outer circular tube and perforated

partition are made of epoxy glass laminates. The vapor cooled part of the leads are small (no.38) silver-plated copper wires woven into the shape of cylindrical tubes (braided electrostatic shielding) which are located in the vapor flow path between the inlet and outlet holes shown. A length of superconducting wire is inserted into and silver soldered onto the bottom end of each braid. The braids are then securely fastened to the bottom end of the current lead by passing each superconducting wire through its respective hole in a brass termination block (half round shape) and soft soldering. The brass termination blocks are then bonded to the partition and outer tube with epoxy. The 2 bundles of superconducting wires are then routed from the end of the current lead to the bottom of the helium storage vessel where they terminate with the current lead to coil splices.

The top end of the current lead is handled in a similiar manner but normal copper wires are used between each braid and its respective hole in the brass termination block. The length of normal copper wire was incorporated into the current lead design to keep the brass termination blocks which are also the power supply cable attachments free of water condensate. The dry condition of the current flags eliminates a failure potential due to an electrical discharge between current flags. We had experienced this type of failure with an earlier magnet and the above improvement has solved the problem.

The chimney construction is also shown in figure 4. All bellows are stabilized with thin walled epoxy glass laminate

tubes. The stabilizing tubes are installed on the inside of the bellows so that they protect the bellows when the transfer lines are being inserted. Manual valves are installed on both the helium and nitrogen inlets. The transfer lines may then be inserted safely with minimum effect on the cryogenic system equilibrium.

X. CONCLUSIONS

Superconducting devices can be built which are both reliable and efficient. A most attractive application for such devices is the replacement of large "power hogs" where great power savings can be appreciated. With careful design and quality construction the complete system can operate reliably with no more "down time" than a conventional device.

REFERENCES

1. J. R. Heim, "A low heat leak temperature stabilized column type support", Cryogenics, December 1972, pp. 444-450

2. K. R. Efferson, "Helium Vapor Cooled Current Leads" The Review of Scientific Instruments, Volume 38, Number 12, pp. 1776-1779