national accelerator laboratory

TM-520
1501

NOTES CONCERNING THE ELECTRON SIDE OF POPAE

M. Tigner

September 20, 1974

CONCLUSIONS

i. Luminosities for e-p collisions in excess of $10^{32} cm^{-2} sec^{-1}$ seem quite feasible with reasonable interaction region parameters. The luminosity at the highest energies will be limited by rf power and the tune shift which electrons can sustain when acted on by the proton beam.

ii. The largest possible radius for the electron ring gives the highest luminosity for e-p collisions at a given energy.

iii. An electron linac in conjunction with the Booster and Main Ring could be used to fill the electron storage ring. The rf harmonic number in these devices is unfavorably low from the point of view of the proton tune shift in e-p collisions. In addition, the e-ring may have to be filled hourly providing considerable interference with the main accelerator. These problems would be alleviated by the use of a 100 meter radius 12 GeV rapid cycling synchrotron for e-ring injection.

These notes are divided into three parts:

A. Interaction Region

B. The Electron Storage Ring

C. The Electron Injector

INTERACTION REGION

A. Interaction region giving highest luminosity consistent with decent tune shift.

1. Case given in POPAE-1* is unphysical in the sense that with the parameters given the beams continue to overlap throughout the region between the Quads (2θ = 1mr)

To maneuver out of this situation without sacrificing luminosity at the highest electron energies

a) reduce emittance of e beam by halving the period length in e storage ring - this allows increase of β_e^* so we can get e Quads away from the interaction point and keep e beam narrow near crossing.

b) add bending septum and strong magnet to get beams separated rapidly to minimize interaction of e Quads with P-beam.

A very schematic representation is shown in Figure 1.** The beam characteristics resulting from this juggling are given in Table 1. Table 2 gives the formulae and assumptions used.

* POPAE-1 is a tenative parameter list prepared by A. G. Ruggiero to serve as a basis for discussion and comment.

** The P side follows ISA e-p option. Page 777, Proceedings of the 1973 Accelerator Conference.

TABLE 1

$\nu_{x,e} = 80$; $E_e = 20$ GeV ($\gamma_e = 4 \times 10^4$)

$\frac{\sigma_e^2}{\beta(s)} = .018 \times 10^{-7}$m $\qquad i_e = .33$A

$\sigma_p^* = .065 \times 10^{-3}$m $= \sigma_e^* \quad \alpha_e \sim \frac{1}{\nu_{x,e}^2}$

$\sigma_{\tau,e} \simeq 0.48 \times 10^{-2}$m

$\left(\frac{\sigma_{\varepsilon,e}}{E_o}\right) \simeq 6.4 \times 10^{-4} \approx$ rms value of $\frac{\Delta P}{P}$

$\beta_e^* = 0.52$ m ; $\beta_{e_{max}} \simeq 193$ m

$\eta_e^* = 5 \times 10^{-2}$m ; $\lambda_{\gamma_f} \simeq 0.6$ m

Crossing angle = 2θ = 2mr

$\delta\nu_e \simeq 0.08$

$\delta\nu_p \simeq 0.28 \times 10^{-3}$

$\mathcal{L} \approx 2.2 \times 10^{32}$cm^{-2}sec^{-1}

All other parameters as per POPAE-1.

TABLE 2

$$\mathcal{L} = \frac{2}{\pi}\,\frac{i_e}{e}\,\frac{N_p}{C}\cdot\frac{1}{2\sigma_p\theta}$$

C = circumference

$\sigma_p = .065 \times 10^{-3}$ m

θ = half crossing angle

$$\delta\nu_e = \frac{2}{\pi}\,\frac{r_e}{\gamma_e}\,\frac{N_p}{C}\,\frac{2\beta_e^*}{2\sigma_p\cdot\theta}$$

$$\delta\nu_p^{\dagger} = \frac{2}{\pi}\,\frac{r_p}{\gamma_p}\,\frac{N_e}{2\sigma_{\beta,e}^2}\,\beta_p^*$$

N_e = # of electrons/bunch
$= 4.4 \times 10^9$

Sands' Notation

$$\frac{\sigma_{\beta,e}^2}{\beta(s)} \simeq 3.84 \times 10^{-13}\,(\mathrm{m})\,\frac{\alpha R\gamma^2}{J_x\rho_o\nu_x} \qquad \frac{R}{\rho} \sim 1.5$$

$$\sigma_{\tau,e}^2 \simeq \frac{3.84 \times 10^{-13}}{C}\,\frac{R}{J_\varepsilon\rho_o}\,\frac{\alpha\gamma^2}{f_{r_f}}\,\frac{F_e}{\hat{V}_{cavity}}$$

$$\left(\frac{\sigma_\varepsilon}{E_o}\right)^2 \simeq \frac{3.84 \times 10^{-13}}{J_\varepsilon\rho_o}\,r_o^2$$

† assumes i) round electron beam
ii) bunch length times crossing angle << beam height.

B. Simplest interaction region

Following Chasman and Voss - 1973 Accelerator Conference (p.780 attached)

Straight through with smallest crossing angle which clears proton Quads 25 m away

Figure 2 shows schematic

$2\theta = 10$ mradian

$\mathcal{L} \simeq 4.4 \times 10^{31}\ cm^{-2}sec^{-1}$

$\delta\nu_e \simeq .08$

$\delta\nu_p \simeq .06 \times 10^{-3}$

$\beta_e^* \simeq 2.3m$; $\beta_{e_{max}} \lesssim 600$ m

$\eta_e^* = 0$

C. Common magnet

Properties similar to A. Figure 3.

As E_e goes down, some gain in $\mathcal{L}$ can be had because N_e can go up. Probably can get above 10^{32} with straight through design (B).

Note that A is expensive in that an extra 9 MeV/reV is radiated and photons shoot directly into interaction point. Same holds for C.

E-RING

In cases considered so far, i.e. electron energy from 5 to 20 GeV on 10 amp beams of protons in the TeV range, the e-p luminosity is rf power and electron tune shift limited.

In this case, one can write the luminosity in terms of the tune shift and rf power:

$$\mathcal{L} = \frac{\rho P}{k e \gamma_e^3} \quad \frac{\delta\nu_e}{2\beta_e^* \cdot r_e} \qquad ; \rho = \text{bending radius}$$

$$P = \text{power}$$

$$k = 6.03 \times 10^{-9} \text{ volt meter}$$

Thus, for fixed power, the luminosity rises with ρ and rises inversely with γ_e^3, so one wants the largest possible radius for the electron storage ring. According to the formula, the luminosity should also rise dramatically as γ_e is lowered in a machine of fixed radius. The luminosity can in principle rise until the proton tune shift limit is reached. However, keeping rf power constant as γ_e falls means increasing the electron current as γ_e^{-4}.

At 20 GeV, the energy for minimum current, the beam current is 330 ma which is already a very high beam current by present storage ring standards. Thus, it may not be straightforward to take advantage of the rapid increase in luminosity as γ_e falls. Conversely, it is clear that dividends are to be had if one can increase the electron beam current so the goal of the electron storage ring should be very high current as well as high energy. This is illustrated below. If we write the luminosity in terms of beam current and electron tune shift, we obtain

$$\mathcal{L} = \frac{i_e}{e} \quad \frac{\gamma_e}{2\beta_e^*} \quad \frac{\delta\nu_e}{r_e}$$

If γ_e falls by a factor of two (from 20 GeV to 10 GeV, for example), then i_e must rise from 330 ma to 660 ma just to maintain the same luminosity. To maintain the same power, the current may rise a factor of $2^4 = 16$ to 5.3 amp! giving a net luminosity increase of a factor of 8.

LATTICE

As indicated previously in the section on interaction regions, great advantage is to be obtained by making the cell length in the electron storage ring less than that in the proton ring, 1/2 for example. This decreases the beam emittance and allows the use of larger β_e^* if desired to keep the electron optical elements away from the interaction point without having enormous β_{max} values. The electron magnets are so weak that the extra quads can be added without significant distortion of the e-ring geometry with respect to the p-rings. If operation over a range of electron energies is desired, one should be able to change the ν back to the value appropriate to the p-ring to provide maximum flexibility in the adjustment of the electron beam size. Tom Collins wrote this up nicely for the Aspen Summer Study volume.

RF

While the frequency of the rf seems circumscribed by economic reasons to lie in the range 300 - 1000 mHz, there is in principle a reason to operate at the highest possible frequency (harmonic number) if one is pushing the proton tune shift limit. This is because the proton tune shift is proportional to the number of electrons per bunch which, for a fixed current and radius, is inversely proportional to the harmonic number. (This argument holds only when the bunch length times the crossing angle is less than the beam height, which is likely to be the case here.)

VACUUM AND LIFETIME

The vacuum has already been discussed by Herman Winick in some detail in the Aspen Summer Study volume. As discussed there, a reasonable aperture and pumping system will give a useful e-beam lifetime of about one hour.

APERTURE

At 12 Gev in the storage ring $\nu \simeq 40$

$$\left.\frac{\sigma^2}{\beta}\right)_{equil} \simeq \frac{3.84 \times 10^{-13} \times 1.5 \times 2.35^2 \times 10^8}{4^3 \times 10^3} = .44 \times 10^{-8} m$$

$$\beta_{max} \sim 10^2 m$$

$$\sigma \sim 10 \times .66 \times 10^{-4} m = .66 \text{ mm}$$

Thus, ignoring injection, aperture $\simeq 14 \times .66 \cong$ 1 cm. The injected beam may have $\varepsilon \simeq 1\pi \times 10^{-8} m$ (see Injector section). If we inject near β_{max} in the SR with $\beta_{max} \simeq 10^2 m$ the width of the injected beam at the injection septum may be $2\sigma_{inj} \simeq 2 \times 10 \times 10^{-4} = 2$ mm.

The figure below shows the aperture at the injection septum schematically.

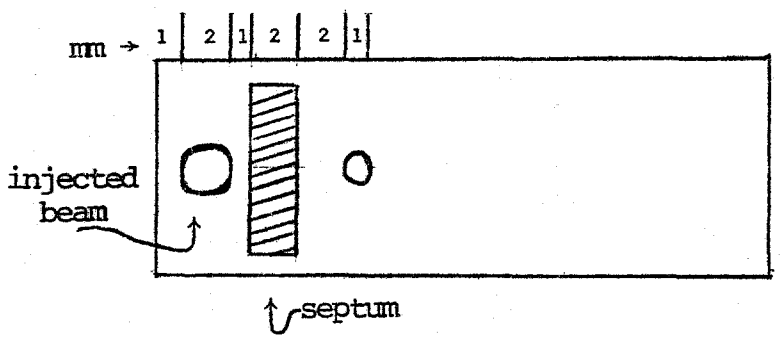

The circulating beam is bumped fast over close to the septum for injection. The next figure shows the beams after the bump has been removed but before the radiation has damped the beam.

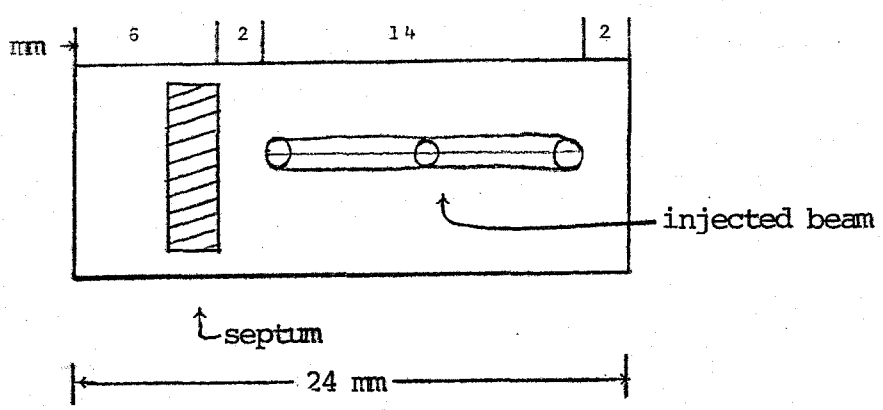

So, in most of the machine, the good field region needs to be 16 to 18 mm wide for injection while at the injection section, the good aperture must be $\simeq$ 24 mm wide.

INJECTOR

While the injection of electrons into the storage ring using an electron linac in conjunction with the Booster and Main Ring is surely possible, there are two immediately apparent drawbacks. The first is that one wants to minimize the number of electrons per bunch in the storage ring to minimize the tune shift of the protons. Thus one should use the highest possible harmonic number or rf accelerating frequency in the injector. (To get around this one might add some 500 mHz rf cavities to the Booster and Main Ring. This would add the difficulty of extra high short impedance devices in the ring to interfere with normal acceleration.) The second is that based on the vacuum computations and the experience of electron storage rings to date, we may expect that the lifetime of the electron beam in the storage ring will be of the order of one hour. Thus, once per hour, the main ring must switch to electron acceleration for a few minutes.

If one decides to minimize interference with the proton accelerators, a 10-12 GeV machine of 100 m bending radius would seem the best choice. This high energy is necessary so that injection into the storage ring can be accomplished in a time of the order of one minute. A 12 GeV machine, operating at 15 Hz with 5 ma circulating current can fill the large ring in 44 seconds. The cost of this injector will be $8-10 million (1974 dollars).

Before committing oneself to such an expenditure, one might well want to use the existing accelerators for electrons to gain operational experience. The parameters and elementary arithmetic appropriate to electron acceleration in the Booster and Main Ring are given below.

$E_{e,inj.} = 250$ MeV, $\varepsilon = 0.25\ \pi \times 10^{-6}$ meter radian

$\frac{\Delta p}{p} = \pm\ 0.5\%$ - CEA linac

Since this linac puts out in excess of 100 ma, it is reasonable to assume that 10 ma can be captured into the booster.

At injection in the booster the width of the electron beam will be

$$w \simeq w_\beta + w_{\frac{\Delta p}{p}} \simeq 2\sqrt{\varepsilon \cdot \beta_{max}} + 2\,\eta_{max}\,\frac{\Delta p}{p}$$

$$\simeq 2\left[\sqrt{.25 \times 10^{-6} \times 33.7} + 3.2 \times .5 \times 10^{-2}\right] \approx 3.8 \text{ cm}$$

The maximum attainable energy in the Booster will be given by

$$E^4_{e,B} = 88.5 \times V_{cavity} \sin\phi_s \times \rho$$

V_{cavity} in kV, E in GeV. For $V_c \sin\phi_s = 600$ kV

$E_{e,B} \simeq 4$ GeV

At peak energy in the Booster, the radiation damping time will be:

$$\tau_\varepsilon = \frac{1}{2}\,\frac{E_e}{V_c \sin\phi_s} \times T_{rev} = \frac{1}{2}\,\frac{4 \times 10^9}{6 \times 10^5} \times 1.6 \times 10^{-6}\text{sec} = \frac{1}{2} \times 10^{-2}\text{sec}$$

The undamping time for the horizontal betatron oscillations will be 2×10^{-2}sec. This is a bit short for 15 Hz acceleration, so it may be wiser to accelerate to 3 GeV in the Booster and extract while the field is still rising. At 3 GeV the undamping time is

$$\tau_{\beta,H} = 4\,\tau_\varepsilon = 2 \times 10^{-2}\left(\frac{4}{3}\right)^3 = 4.74 \times 10^{-2} \text{ sec}$$

Since radiation will not have time to affect the properties of the electron beam in the Booster, the output beam parameters will be

$$\left.\frac{\Delta E}{E}\right)_{out} = \pm .5 \times 10^{-2} \times \frac{.25}{3} = \pm .042 \times 10^{-2}$$

$$\left.\varepsilon\right)_{out} = 0.25 \times 10^{-6}\pi\sqrt{\frac{.25}{3}} = 7.8 \times 10^{-8}\pi \text{ meter}$$

In the Main Ring

$$w_{max}\ (3 \text{ GeV}) = 2\left[\sqrt{7.8 \times 10^{-8} \times 98} + 4.2 \times 10^{-4} \times 5.7\right]$$

$$= \underline{1.03 \text{ cm}}$$

In the Main Ring, the betatron oscillations will come to radiation equilibrium in a time

$$\frac{\tau_{MR}}{\tau_{Booster}} = \frac{\rho_{MR}}{\rho_{Booster}} \cdot \frac{T_{MR}}{T_{Booster}}$$

So $\tau_{MR} = 4.74 \times 10^{-2} \times \frac{750}{45} \times \frac{21}{1.6} = 10.4$ sec

Thus, the beam injected into the main ring will be affected very little by radiation during the 1 sec holding period in the main ring cycle.

MAIN RING

With a linearly rising field, the rf voltage required will be given by

$$V_c \sin\phi_s = \dot{E}_e \cdot T_{MR} + \frac{88.5\, E_e^4}{\rho}$$

$\dot{E}$ in eV/sec, E in GeV, ρ in meter

For $\dot{E} = 20$ GeV/sec and $V_c \sin\phi_s = 3 \times 10^6$ volts

$E_e = 12.2$ GeV

At 12 GeV in the main ring, we have

$$\tau_\varepsilon \simeq \frac{12 \times 10^9}{2.45 \times 10^6} \times 21 \times 10^{-6} \text{ sec} = .10 \text{ sec.}$$

$\tau_\beta \simeq 20$ sec.

If the electron beam is allowed to come to equilibrium in the main ring then,

$$\frac{\sigma^2}{\beta} \quad \frac{3.84 \times 10^{-13} \times 1.33}{2^3 \times 10^3} \times 2.35^2 \times 10^8 = 3.52 \times 10^{-8} \text{m}$$

Whereas if the beam were not allowed to come to equilibrium

$$\varepsilon \simeq .25 \times 10^{-6} \times \frac{.25}{12} = .52 \times 10^{-8}$$

Thus the e-beam should be extracted as rapidly as possible from the main ring after attaining the desired energy. Since with the $\dot{E}$ given above, the acceleration time is 1/2 sec, the time spent at 12 GeV can easily be made << .2 sec.

If the main ring is pulsed every 2 sec, then we can put 10 ma into the storage ring every 4 sec so

$$T_{fill} \quad \frac{330 \text{ ma}}{10 \text{ ma}} \times 4 \text{ sec} \qquad = 132 \text{ sec}$$

One should note that the usability of the Fermilab proton injectors makes sense only if the current in the electron storage ring is limited to the values given here. If the single beam limit of the e-ring can be made large, then a rapid cycling, dedicated electron synchrotron of $E_{max} > 10$ GeV is clearly the injector of choice.

FIG. 1

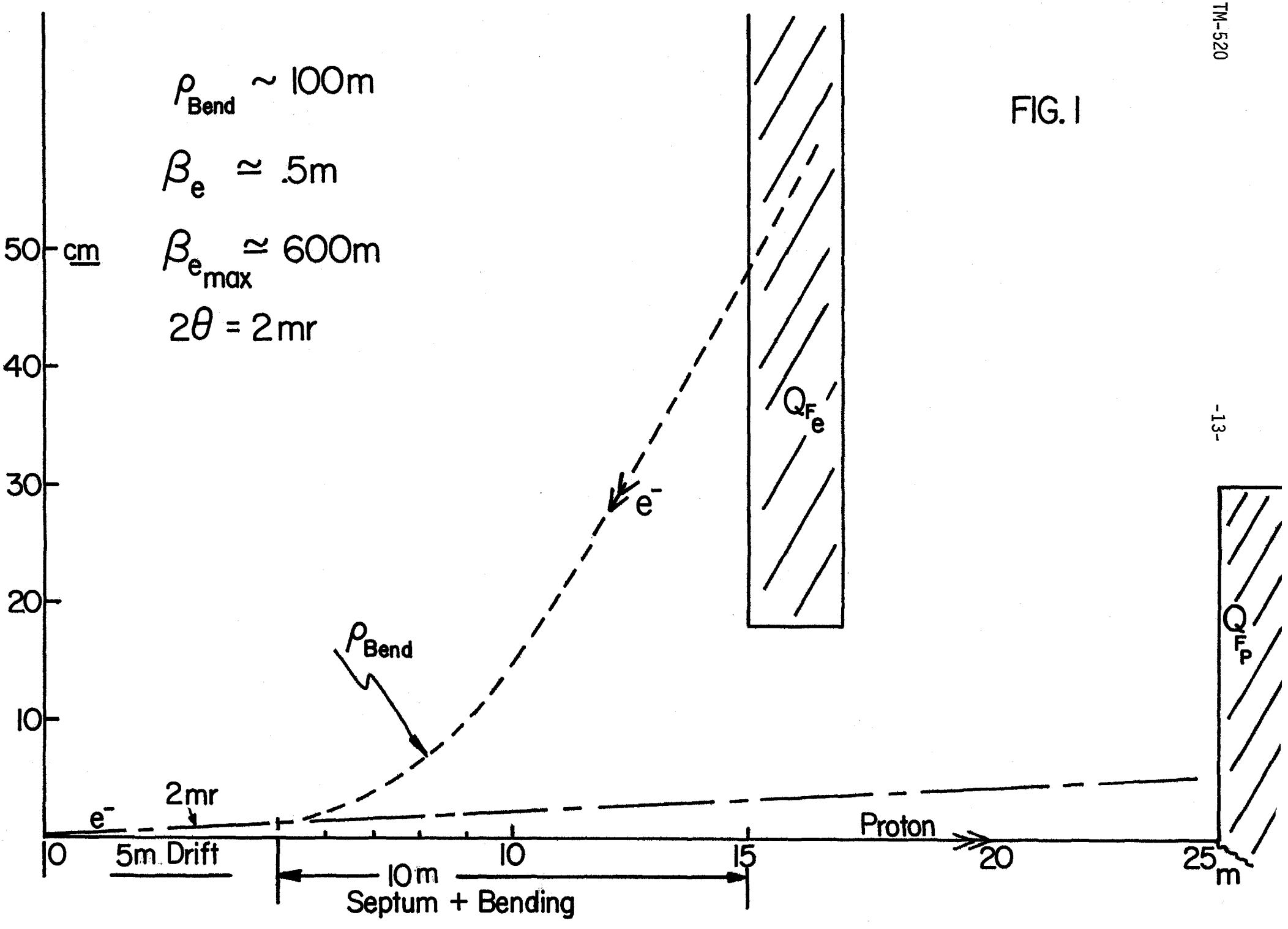
$\rho_{Bend} \sim 100m$
$\beta_e \simeq .5m$
$\beta_{e_{max}} \simeq 600m$
$2\theta = 2mr$
50
cm
40
30
20
10
Q_{F_e}
e^-
ρ_{Bend}
2mr
e^-
Proton
Q_{F_p}
0
5m Drift
10
15
20
25
m
10m
Septum + Bending

FIG. 2

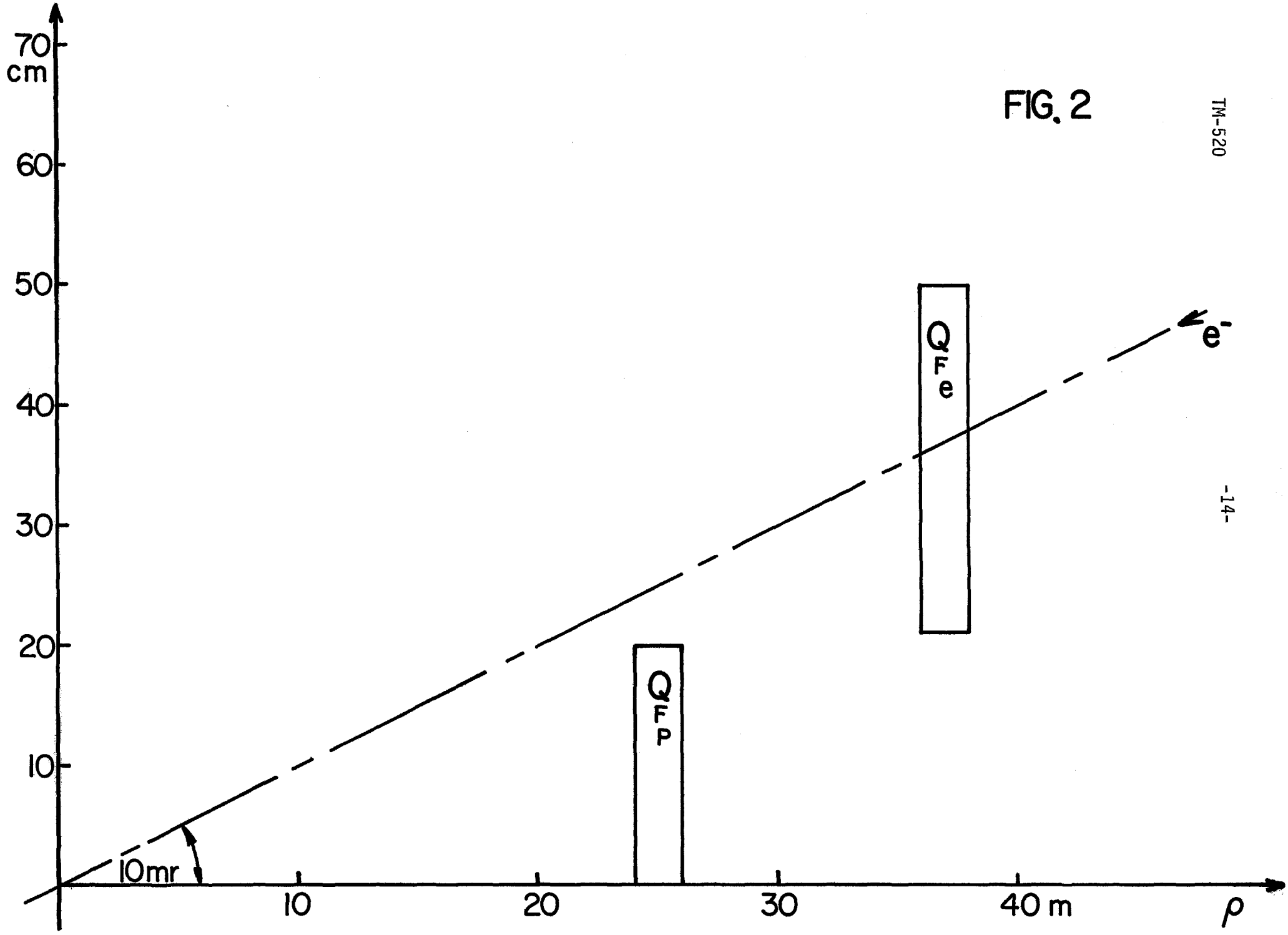

FIG. 3

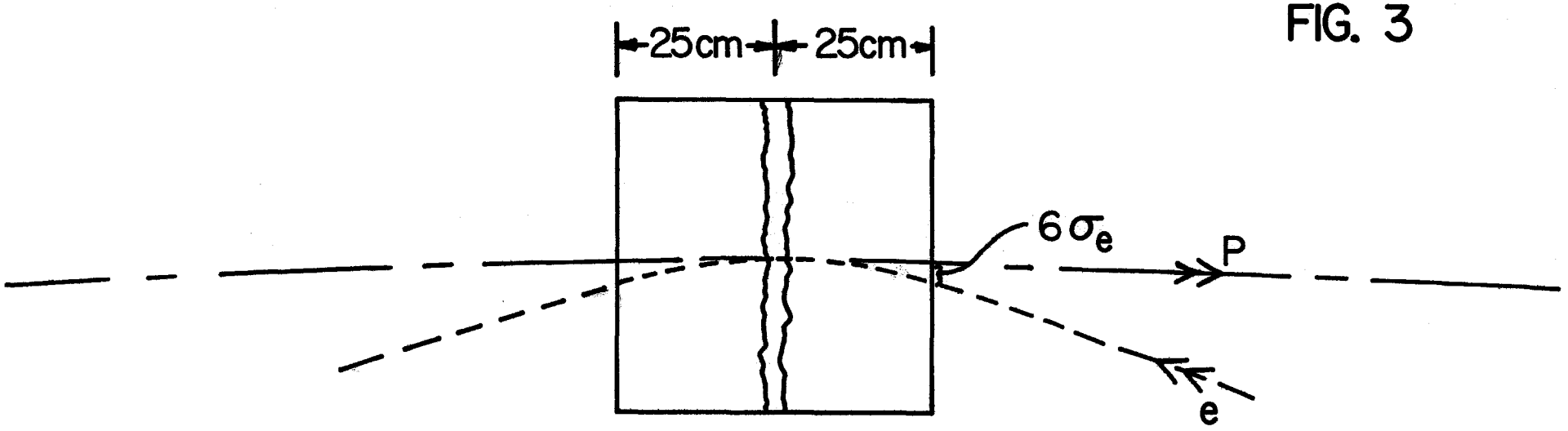

$\rho_e \simeq 87$m

B ~ 8 kGauss

Common magnet
interaction length $\lesssim$ 50 cm
if magnet is continuous

References

1. ISABELLE Preliminary Design Study, BNL 16716 (1972).

2. R. Chasman, E.D. Courant, M. Month and A. van Steenbergen, IEEE Trans. Nucl. Sci. NS-20, No. 3 1973 (to be published).

3. E.D. Courant, CRISP 72-79, BNL 17277 (1972).

4. E. Keil, C. Pelligrini and A.M. Sessler, CRISP 72-34 (1972). See also E. Keil, CERN/ISR-TH/72-33 (1972).

5. G.A. Voss, CRISP 72-79 (1972).

6. M. Allen and G. Rees, CRISP 72-68 (1972).

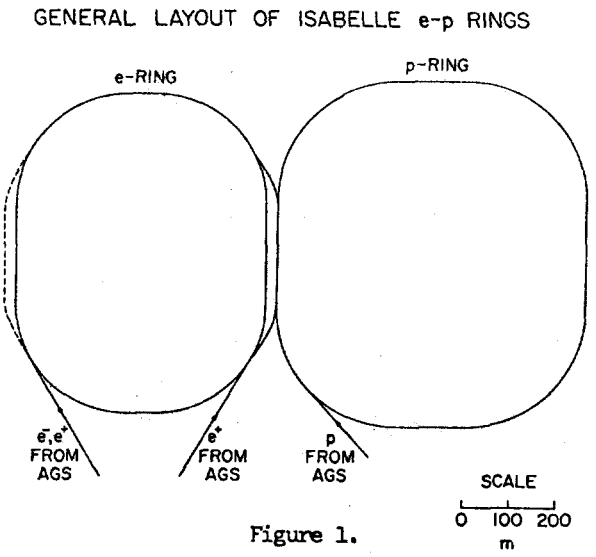

Figure 1.

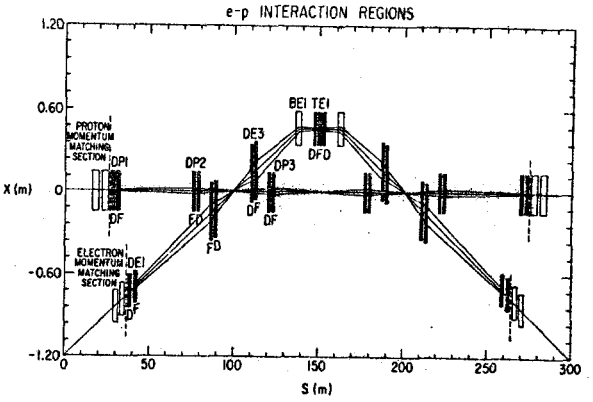

Figure 2.

TABLE I

LATTICE PARAMETERS

Type of Lattice	Separated Function
Average Radius	318 m
Average Radius of Circular Arcs	232 m
Magnetic Radius	180 m
Number of Regular Cells	40
Type of Cell	FBDB
Betatron Phase Advance Per Cell	
Horizontal	1.63 rad
Vertical	1.57 rad
Magnetic Field in Cells	2.77 kG
Quadrupole Gradient in Cells	~ 1 kG/cm
Cell Length	25 m
Number of Insertions	8
Number of Momentum Matching Sections	8
Number of Superperiods	2
Length of Experimental Insertion*	225 m
Length of rf Insertion*	58 m
Length of Injection, Extraction Insertion	59.4 m
Transition γ	19
Cell β-function	
maximum	42 m
minimum	6.6 m
Cell-Off-momentum Function	
maximum	1.65 m
minimum	0.8 m
Effective Beam Sizes (at 15 GeV)	
Cell F x x y	2.51 x 0.20 cm x cm
Cell D x x y	1.10 x 0.51 cm x cm

*Excludes momentum matching section.

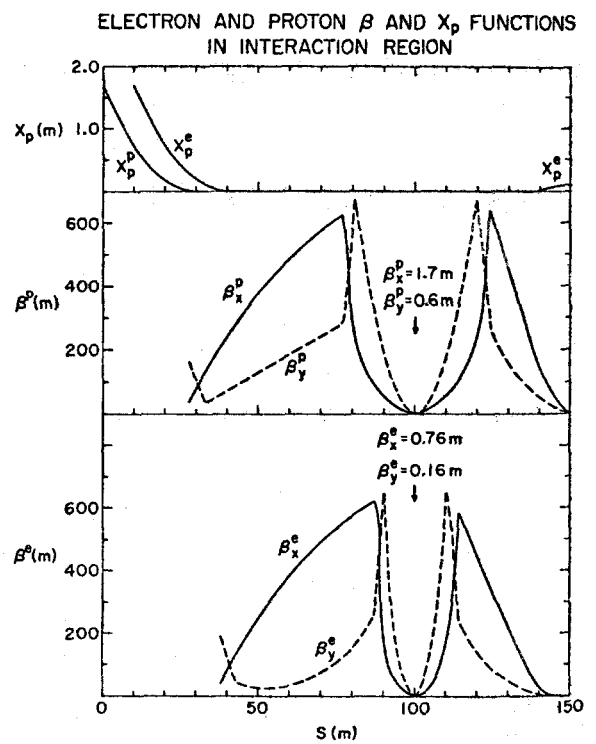

Figure 3.