THE DOWNSTREAM BEAM-STOP AND TARGET-BOX FOR THE NEUTRINO AREA

Ray Stefanski

February 1974

Introduction:

For many of the experiments approved for the Neutrino Area, a beam-stop is required at the downstream end of the decay tunnel. Since beam-stop requirements differ between experiments, provision must be made for access to, and removal of, the beam-stop. Furthermore, adequate shielding must be provided for the access enclosure (Enclosure 100) as well as for the area outside of the berm. These requirements suggest the use of a target-box in this area to house the beam-stop and hadron shielding: Since the requirements in this area are analogous to those of the Front End Enclosure of the Meson Area, a similar solution was adopted to help expedite the development of the Neutrino Area.

The downstream target-box will operate under a variety of conditions. For the initial experiment scheduled for the Neutrino Lab — the narrow-band neutrino beam — only a very low power beam-stop is required at the end of the decay tunnel. The muon and hadron beams will also run at that time and will require collimators in the target-box. The broad-band neutrino experiments will run later and will require a high power (0.5 Mwatt) beam-stop in the target-box, and neutron shielding for enclosure 100. The muon polarization experiment of proposal 48 will require a special variable density target in the target-box. Some monopole exposures may be done in this area and may require special targets. Beam stops, hadron shielding and beam monitoring equipment will be loaded into the target-box for each set of experiments by means of a rigging procedure. This report contains detailed specifications and design criteria for the downstream target-box, the loads it will house for the currently anticipated running conditions, and the loading procedures for the target-box.

Target-Box:

The downstream target-box in the Neutrino Area is similar to the target-box used in the Meson Area, but with four essential differences: (1) The Neutrino Area target-box is 24 feet long and its internal dimensions are 40" X 40"; (2) no provision need be made for accurate alignment of the load in the target-box; (3)the target-box should be vacuum tight for pressures of 10 microns; (4)the target-box will not have a caisson support but will sit on a bed of heavy concrete. A schematic diagram of the target-box is shown in Figure 1.

The target-box must be long enough to accommodate neutron shielding to keep the level of induced radioactivity in enclosure 100 at a tolerable level.

The beam-stop, which is about 5 feet long. constitutes the front part of the neutron shield. It is backed up by steel to complete the neutron shielding. Calculations indicate that 10 feet of iron shielding would be needed to keep the level of neutron radiation in this enclosure at 20 mrem/hour during beam operation[1]. Since this is a minimum requirement the target-box is made 20 feet long to accommodate a maximum of 20 feet of neutron shielding[2]. In addition, a four-foot extension is required for access to electrical, water and vacuum systems, making the total length of the target-box 24 feet. In the initial contract, DUSAF agreed to provide the first 20'-6" of target box, while the last 3'-6" are to be provided by NAL.

The internal dimensions of the target-box are determined by the necessity to house a load that will shield the entire face of the decay pipe. Since the decay pipe is 36" in diameter, this would indicate that the target box should be at least 36" square. In addition, however, provision must be made for a one-inch clearance for the load on all four sides. (In the Meson Area the target-box requires a 2" clearance at the top to allow for positioning and alignment of the load after it is in the box. The application in the Neutrino Area does not require positioning of the load - the wheels and undercarriage of the load remain in the box during operation -

and therefore only a one-inch clearance is required.) Thus the target box is made 40" X 40", and the load 39" X 39", so that the one-inch space between the load and the walls of the box is masked by the earth berm: Since the beam has little divergence at this end of the decay pipe, particles can enter the space only after passing through a considerable amount of earth. The earth mask is also used to protect cast steel wheels and other elements that cannot withstand direct exposure to the beam.

The entire load, which includes beam-stop, neutron shield, beam monitors, wheels and undercarriage, remains in the target box during operation. Its operation and function are analogous to the shielding cars used in the other target-boxes. No provision need be made to align the load when it is in the target-box.

The target-box will operate at a 10-micron vacuum-the same vacuum as in the decay pipe - to avoid the need of a three-foot vacuum window between the target-box and decay pipe: Maintenance for a vacuum window of this type would be difficult because of its inaccessibility. Indeed, the vacuum in the decay-pipe will be achieved by pumping on the downstream end of the target-box. As a consequence, access to the target-box requires breaking vacuum in the decay-pipe. A twenty-four-hour pump-down time is required for the decay-pipe, but this should not appreciably hinder the operation of the area: Access to the target-box should be required only infrequently. In addition, maintaining the vacuum in the decay-pipe through a thin window would constitute a safety hazard to personnel working in the enclosure and at the target box.

A vacuum door will be required for the target-box and it will need a fairly good seal. Because of the high radiation levels in this area, an inorganic material such as indium is suggested for the sealant. The door would be clamped into place and the vacuum would provide the necessary force to maintain the seal.

Figure 2 shows an elevation view of the front end of the target-box. The recessed area in front of the box is used as a sump to collect radioactive water that might escape in the event of a water-line rupture. Heat exchangers for the beam-stop should be located near this area to make use of the same sump. This would have the advantage of limiting the area in which radioactive water is used. When loading the target-box, the recess must be filled to provide support for the four-foot extension of the target box. This support can be removed once the load is in place.

The target-box rests on a bed of heavy concrete, which serves as additional hadron shielding for enclosure 100. In contrast to the Meson Area, caissons are not provided to support the target-box. The target-box will be allowed to settle along with the decay-pipe and the upstream target-box.

The downstream target-box also differs from the Meson Area design in that it will not need a thin steel vacuum jacket around it.

All of the other features of the target-box are the same as in the Meson Area. 30"-gauge, 40-pound rails are provided in the floor of the box: They offer the easiest means of steering the load into place. The inner 3" steel wall of the box is water-cooled: The water is circulated on the outer surface of the wall. Two feet of iron blooms are provided around the outside of the box and serve as transverse hadron shielding.

Loading Procedures - Enclosure 100:

The target-box is designed to accept loads of twenty feet in length and seventy tons in weight. The enclosure is made large enough to allow the load to be brought into the target-box by means of rigging procedures or by use of a fork lift.

The procedure for loading the target box can be outlined with the help of figures 3 and 4a and b. A twenty foot long bedplate is first brought in and aligned with the target-box. The bedplate is set on jacks and maneuvered into place. It is essential at this point that the rails of the target-box line up with the rails on the bedplate. The beam-stop can then be brought into place by means of a fork lift. (The beam-stop is not radioactive when loaded into the target-box.) The iron neutron shield is then brought in and mounted on the bedplate. The shield is tied to the beam-stop and the entire load is winched into the target-box. The bedplate is then removed and the vacuum door is put into place.

In removing the load from the target-box, additional precautions must be taken because the load will be radioactive. The procedure begins by removing the vacuum door. The bedplate is then mounted into position. The neutron shield is disconnected from the beam-stop and removed from the target-box. The door to the target-box should now be covered by a thin lead shield, while the neutron shield is removed from the enclosure. Then a one-inch-thick lead shroud is mounted on the bedplate and the beam-stop is removed from the target-box and put into the shroud. The beam-stop with its shroud is then removed from the enclosure by a remote-controlled fork lift. The bedplate can then be removed from the enclosure.

Disconnecting the beam-stop from the neutron shield while in the target-box requires a special procedure. The beam stop is connected to the shield by means of two steel cables that are threaded through holes in the bottom of the shield as shown in figures 9a and b and 4a and b. The cables are tied to

the shield at the back. Disconnect is then accomplished from the rear of the shield and the cables remain in the target-box when the shield is removed. The cables are used to move the beam-stop out of the target-box.

In the event that an excessive force is required to remove the load from the target-box, an emergency 100-ton eye hook has been provided at the downstream end of the enclosure. From this point a winch and cable could be used to supply a 100-ton pull on the load. Thus, if a wheel bearing or axle on the load should fail due to exposure to the beam, the load could be dragged out of the target-box. Even in an extreme case where the load might become wedged into the target-box, sufficient force could be supplied to free it.

An alternate procedure for removing the load from the enclosure would be to winch the entire load - beam-stop, shroud, hadron shield and bedplate - out through the entrance of the enclosure. For this purpose, the bedplate would be mounted on brass bearings. The load would be winched out and onto the bedplate. A winch and cables would be used to slide the load out of the enclosure. A wooden carriage would be mounted against the wall of the enclosure to help remove the load.

Beam-stops and Targets:

(A) Initial Load for the Target-Box

During the initial operation of the area the primary user will be the narrow-band neutrino experiment. The main beam-stop for this experiment will be located in the upstream target-box and, therefore, the downstream target-box need handle only a negligible amount of thermal power (less than 10 watts) for the experiment. About one absorption mean free path of material will be required for shielding: This is equivalent to about six inches of iron. Two ports must be left open in the shielding: One at the beam axis for the muon beam and another 14½" to one side for the hadron beam. Both ports are 2" vertical by 4" horizontal.

(B) The High Power Beam-stop

The high power beam-stop will be used to absorb full beam power. Its design requires consideration of (1)the amount of material needed to absorb the beam power, (2) energy deposition within the material, (3)mechanical stresses, (4)distribution of cooling water, (5)type of material used to absorb beam power and (6)the flow characteristics of water within the beam-stop. We will consider each of these points in the following paragraphs, and, also, we will suggest a beam-stop design based on a simple model.

The amount of material needed to absorb the beam power is tabulated in TM-218 and the results are given in figure 5 From the graph it is clear that about eight absorption mean free paths of material are required. This is equivalent to about five feet of copper.

The energy disposition in the beam stop is not uniform but peaks at about 1.5 absorption mean free paths within the material. This can be seen in figure 6 which gives energy deposition in aluminum as calculated by Monte Carlo techniques[3]. Also, the radial distribution of energy becomes flatter as the shower develops within the material, as can be seen in the figure[3]. Therefore, the cooling requirements are most strin-

gent in the first four mean free paths of material.

The temperature rise in the beam-stop will depend on the duration of the spill and the size of the beam spot. For a long spill the cooling water can moderate the temperature rise. Also, a larger spot size will result in lower temperatures in the stopper, since the energy density deposited in the material would be less. For bubble chamber neutrino runs, we anticipate a short spill but a large spot size (given a 1 mm-mrad emittance at the target, the spot should be about sixteen inches in diameter at the end of the decay tunnel). For experiment 48 or for monopole exposures, the spot size at the beam-stop will be about 2" in diameter with a long spill.

As the temperature within the beam-stop increases, large stresses can develop due to the radial temperature differential in the beam-stop. (The hot metal along the beam axis tries to expand but is constrained by the cold metal on the outside of the beam-stop.) The expansion is constrained in two dimensions and therefore the stress is given by

$$\mathcal{S} = 2 \alpha Y \Delta T \qquad (1)$$

where α = coefficient of linear expansion

Y = Young's modulus of the material

ΔT = increase in temperature

$\mathcal{S}/\Delta T$ is given in Table I for copper, aluminum and iron, and compared to the Yield Point of each metal. Since we anticipate temperature increases near 100°C., it is clear that, if a solid block of metal were used for the beam-stop, deformation of the metal would occur. (As we will show later, because aluminum will tend to run at lower temperatures, these stresses would not be as severe if aluminum were used as the beam-stop material.) This could lead to breaks or failure in water paths causing leaks within the stopper. These large stresses can be avoided, however, if the heated metal is given room to expand. For this reason, we favor constructing the beam stop out of segments of rods rather than out of a solid block of metal. More will be said on this later.

A simple model can be used to estimate the required proximity of cooling water to the deposited heat within the beam-stop. In figure 7 we consider thermal energy deposited uniformly within a cylinder of radius a and of length L. The outside surface of a cylinder of radius b is maintained at a temperature T_b. If energy is being deposited into the cylinder of radius a at a rate S (cal/cm^{3}sec) then:

$$\dot{Q} = SV - \frac{2\pi L k}{\ln(b/a)}(T - T_b) \tag{2}$$

where $\dot{Q}$ = energy flow per unit volume to surface b

V = volume of cylinder a

L = length of cylinder a

k = thermal conductivity of metal

T = temperature at surface a.

Substituting $\dot{Q} = \rho c V \frac{dT}{dt}$ (3)

where ρ = density of metal

c = specific heat of metal

and solving for T:

$$T = T_b + \frac{S\tau}{c\rho}\left(1 - e^{-t/\tau}\right) \qquad 0 \le t \le t_s, \tag{4a}$$

where t_s = duration of spill,

$$\tau = \frac{c\rho}{2k} a^2 \ln(b/a). \tag{4b}$$

If the spill is continuous the metal will reach an equilibrium temperature

$$T_\infty = T_b + \frac{S\tau}{c\rho} = T_b + \frac{\ln(b/a)}{2\pi L k} P, \tag{5}$$

where p = beam power.

For t greater than t_s the metal cools to a temperature given by:

$$T = T_b + \frac{S\tau}{c\rho}\left(e^{t_s/\tau} - 1\right) e^{-t/\tau} \qquad t \ge t_s. \tag{6}$$

Values of τ for copper, aluminum and iron are given in Table II. From the table, we can estimate roughly that since a 2" beam spot is the smallest anticipated in this area, water cooling lines should be within 4" of the beam axis apart to achieve cooling times of about 2 seconds for copper.

For a short spill, the exponential in Eq.4 can be expanded in a Taylor series which gives

$$T = T_b + \frac{S t}{c\rho}.$$

Since $S = \frac{N E_p}{V t_s}$,

where N = number of protons

E_p = proton energy

V = volume of cylinder a,

then $T = T_b + \delta T \, (t/t_s) \qquad 0 \le t \le t_s,$ (7)

where $\delta T = \frac{N E_p}{c \rho V}$.

Therefore, if the duration of the spill is sufficiently short relative to τ the temperature rise per pulse is independent of spill duration. For a 4"-diameter copper cylinder, 30" long, a bubble chamber pulse of 5 X 10^{13} protons of 500 GeV energy of a two-inch spot size would give a temperature increase of 140° C. if the energy were uniformly deposited. If non-uniform energy deposition is taken into account the temperature rise would be about 300°C. For a four-inch beam spot the temperature rise is about 75°C. We would anticipate designing a beam-stop that would accommodate a four-inch spot size for a short spill at full beam power. For a long spill, this same beam-stop could accommodate a two-inch spot size if it were made of copper.

The water flow required to cool the beam-stop can be calculated from conservation of energy and is given by the formula

$$F = \frac{3.8\, P}{c \rho \Delta T} \qquad (8)$$

where F = rate of water flow in gal/min

c = specific heat of water = 1(cal/°C.gm)

ρ = density of water = 1 gm/cm^3

ΔT = temperature rise of water in °C.

P = beam power in kwatts

Therefore, to keep the water temperature at 40°C. the water flow would have to be 48 gal/min if the full beam power of 500 KW were being dumped into the beam stop. This assumes that all of the water is being used efficiently to cool the heated areas in the beam stop. This is seldom the case in practice and additional water must be supplied to compensate.

Aluminum and copper are the most suitable metals for

beam-stop absorber. Metals with lower thermal conductivity require a larger surface-to-volume ratio to allow sufficient cooling. Iron, for example, would run at about the same temperature as copper, but would be about ten times as hard to cool: The specific heat and density of iron are nearly the same as for copper, but its thermal conductivity is about ten times less. Lighter metals are inappropriate, since they would require that the beam-stop be very long to absorb the beam power.

The advantages of aluminum are that it would operate at a low temperature and that it would become less radioactive than heavier metals. The use of copper, however, since it is a relatively dense metal, results in a short beam-stop and therefore requires less room in the target-box.

To demonstrate that aluminum would operate at a lower temperature than copper, consider equation 7. Since the product ρV would be nearly the same for both copper and aluminum we can say

$$\frac{\delta T_{AL}}{\delta T_{CU}} = \frac{C_{CU}}{C_{AL}} = 0.44$$

(Here we have ignored the fact that the radiation length in aluminum is much larger than in copper; therefore, the product ρV is in fact much larger for aluminum and would result in a lower ratio than that given by this equation.)

Copper is easier to cool but not by an appreciable factor. From equation 4b,

$$\frac{\tau_{AL}}{\tau_{CU}} = \frac{C_{AL}\,\rho_{AL}\,k_{CU}}{C_{CU}\,\rho_{CU}\,k_{AL}} = 1.3$$

Thus, aluminum would take 1.3 times longer to cool than copper. To summarize, aluminum would operate at appreciably lower temperatures than copper, while its cooling properties would not be grossly different. Aluminum has the further advantage that it will run at a lower specific activity than copper. A major difficulty with an aluminum beam-stop, however, is that it would be 2.5 times longer than a copper beam-stop.

A suggested design for a beam-stop is given in figure 8.

The beam stop is made 39" X 39" to completely shield the face of the decay-pipe. The beam power is dissipated only in the inner 18" X 18" of the stopper. To avoid the development of large stresses, the stopper is made out of 2" diameter rods: This loosely packed configuration gives the metal ample room to expand and thereby avoids the development of large stresses. The packing fraction for the configuration is 91%. The downstream end of the stopper can be made of iron: The energy deposition is down by about a factor of a hundred as suggested by figure 6. The front end of the beam-stop is made of copper. Aluminum can be used but the length of the front end would increase by a factor of 2.5. Care must be taken to measure and control the pH value of the water to avoid corrosion of the metals.

The rods are staggered in the transverse direction to force the water to flow in a zig-zag pattern across the face of the beam stop.

A major objection to this beam stop design is that it holds a large amount of water (25 gallons). This could lead to problems in the event of a break in a water line and it would be desirable to reduce the need for water in the beam-stop.

The conductance of the beam stop is very low requiring only 0.35 PSI gauge pressure to achieve a water flow of 100 gal/min.

To avoid the formation of a thin film on the surface of the rods, which would reduce the cooling capacity of the water, the Reynolds number for flow between the rods should be made fairly large. A calculation for the configuration in figure 8 gives a Reynolds number of 22,000[4]. Because of the unusual geometry, however, the calculation is not totally reliable. However, spoilers can be added between the rods if needed to break up the water flow.

Two ports must be included in the beam-stop to accommodate the muon and hadron beams. Both ports are 3" vertical by 5"

horizontal. The center of the muon beam port is 10" off beam center while the hadron beam port is 14½" off axis. The beam ports are shown in figure 9. The neutron shield directly behind the beam-stop will have three ports each 2" X 4" as shown in figure 9. The same neutron shield car can be used with a variety of different beam stops. Any port that isn't in use can be plugged with a 2" X 4" iron bar. The beams coming out of the ports must be monitored so that the beam can be turned off if too much of the primary beam is getting through the ports.

The position of the beam incident on the stopper must be carefully monitored during operation. Were the beam to stray significantly off the beam-stop axis, it could damage the steel parts of the stopper. The monitoring system must be able to turn off the beam when it strays. Water temperature should also be monitored and the beam turned off when the temperature becomes excessive.

The wheels for the stopper were chosen to be eight inches in diameter to allow them to be masked by the earth berm. The wheels are made of cast steel and are not water-cooled. If they were exposed directly to the beam, they could be damaged. The radius of the wheel should be fairly large, however, to minimize the pull needed to move the beam-stop. Water lines to the beam-stop should also be masked by the earth berm. The position of wheels and water lines is shown in figure 9.

The beam-stop should be positioned as far forward in the target-box as possible to allow room for the neutron shield car directly behind it and to take maximum advantage of the shielding provided by the iron walls of the box.

(C) Variable Density Target:

A special variable density beam-stop or target will be provided by NAL for experiment 48. A preliminary design of the target has been done by BNL. An isometric of this beam-stop is shown in figure 10. It consists of three targets that can be moved into the beam by means of a cable. The targets are all made of copper but differ in their relative density. Each is made of cells of one-inch slabs of copper separated by 1/32" for water, as shown in the inset. In the shortest target, the cells have no separation between them; in the intermediate-sized target, the cells are 2" apart; and in the longest target, the cells are 4" apart. Thus, the effective target density differs by a factor of three.

Summary:

Most of the target-box design is complete and is being carried out by DUSAF. Detailed design work must still be done on the vacuum door, the vacuum feed-through water connectors and electrical connections in the target-box. The loading procedures for the target box have also been worked out. They will vary depending on the load, but will be done essentially as a rigging operation.

A rough design of the beam-stop has been carried out, but further detailed design work must be done. Design specifications have been given in this report.

A preliminary design of a variable density target has been carried out at BNL, and further design and construction will be done at NAL.

REFERENCES

[1] 200 GeV Accelerator Design Study 1965, Vol. I, Sec. XII.

[2] Twenty feet of iron equivalent hadron shielding has been suggested by the Radiation Physics Section.

[3] These results were obtained from the Radiation Physics Section. Their calculations are based on the Monte-Carlo program TRANSK.

[4] Kent's Mechanical Engineers' Handbook, Twelfth Edition, Power Volume, 6-36.

TABLE I

	α ($^{o}C^{-1}$)	Y PSI	Y_{α} PSI/^{o}C	Yield Point PSI
Cu	1.4×10^{-5}	1.6×10^{7}	420	5000
Al	2.4×10^{-5}	1×10^{7}	480	5000
Fe	1.2×10^{-5}	2.8×10^{7}	672	30 000

$$\delta = \alpha Y \Delta T$$

TABLE II

$$\tau = \frac{c\rho}{2k} a^2 \ln(b/a)$$

	c	ρ	k	$\frac{c\rho}{2k}$	$\tau \begin{pmatrix} a = 2.5\,cm \\ b = 5\,cm \end{pmatrix}$ (See Fig.7 for definition of a and b)
Cu	.094	8.96	.92	.458	1.99 sec
Al	.212	2.7	.48	.596	2.58 sec
Fe	.11	7.86	.11	3.93	17.03 sec

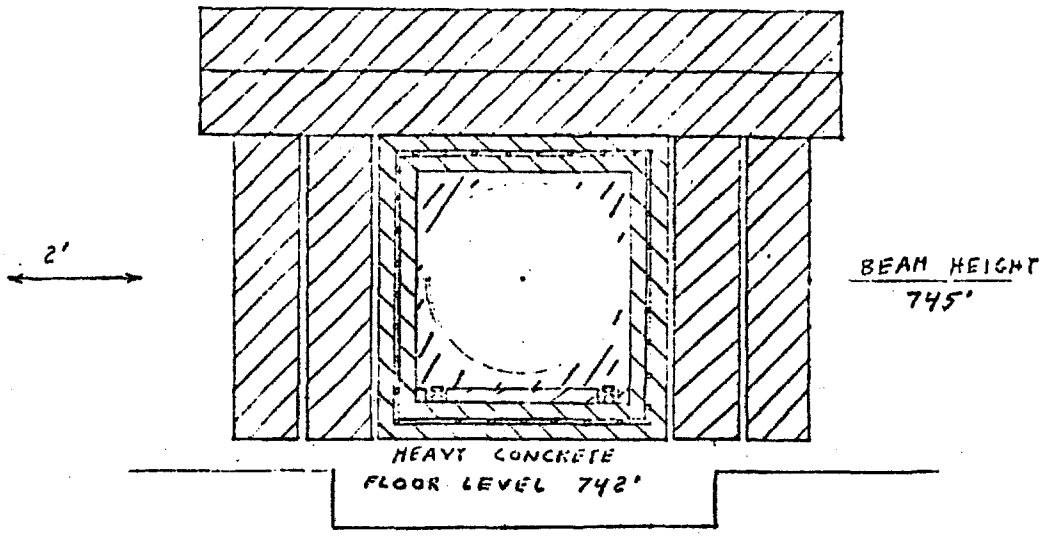

FIG 1

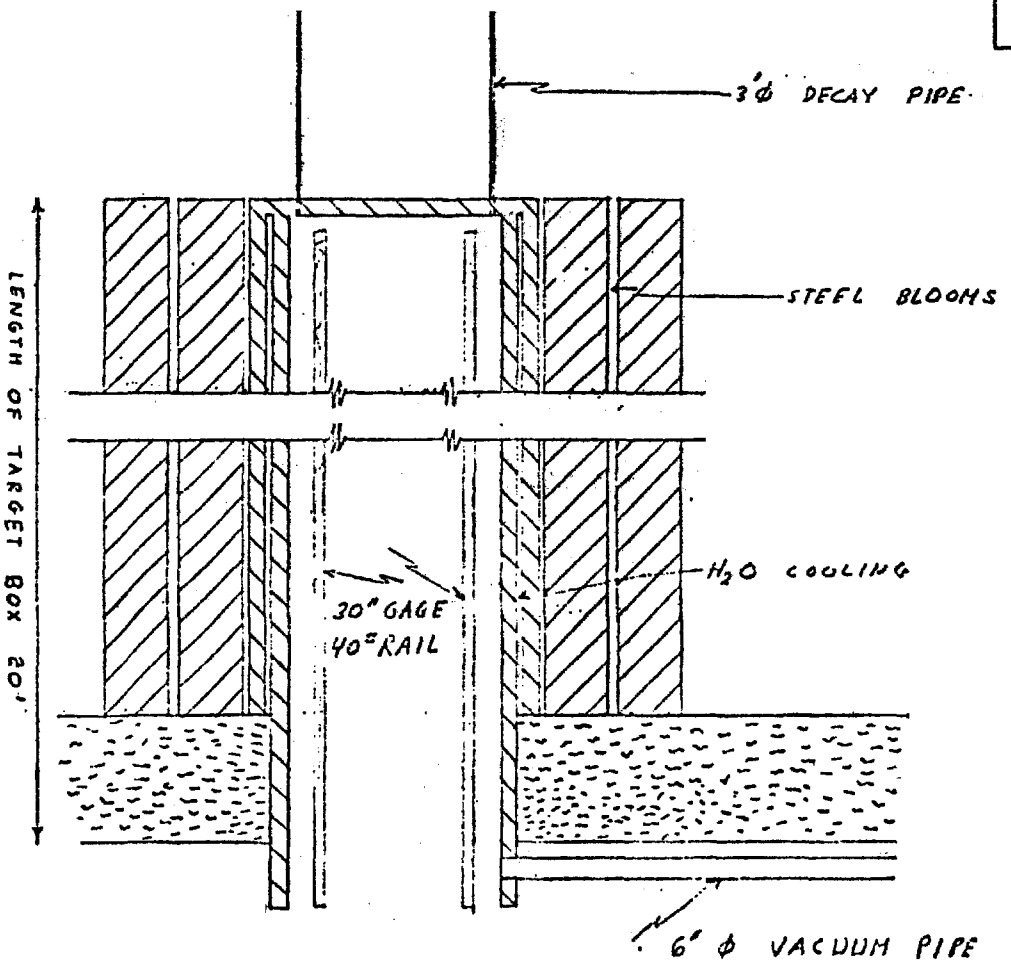

NATIONAL ACCELERATOR LABORATORY
ENGINEERING NOTE

SUBJECT: DOWN STREAM TARGET BOX

SECTION: EXP FAC

PROJECT: NEUTRINO LAB

SERIAL-CATEGORY:

PAGE: V1

NAME: R. STEFANSKI

DATE: 12/1/70

REVISION DATE:

ENGINEERING NOTE | FAC | LAB | 1/1

SUBJECT: DOWN STREAM TARGET BOX (ENTRANCE)

NAME: R STEFANSKI

DATE: 1/13/71

REVISION DATE

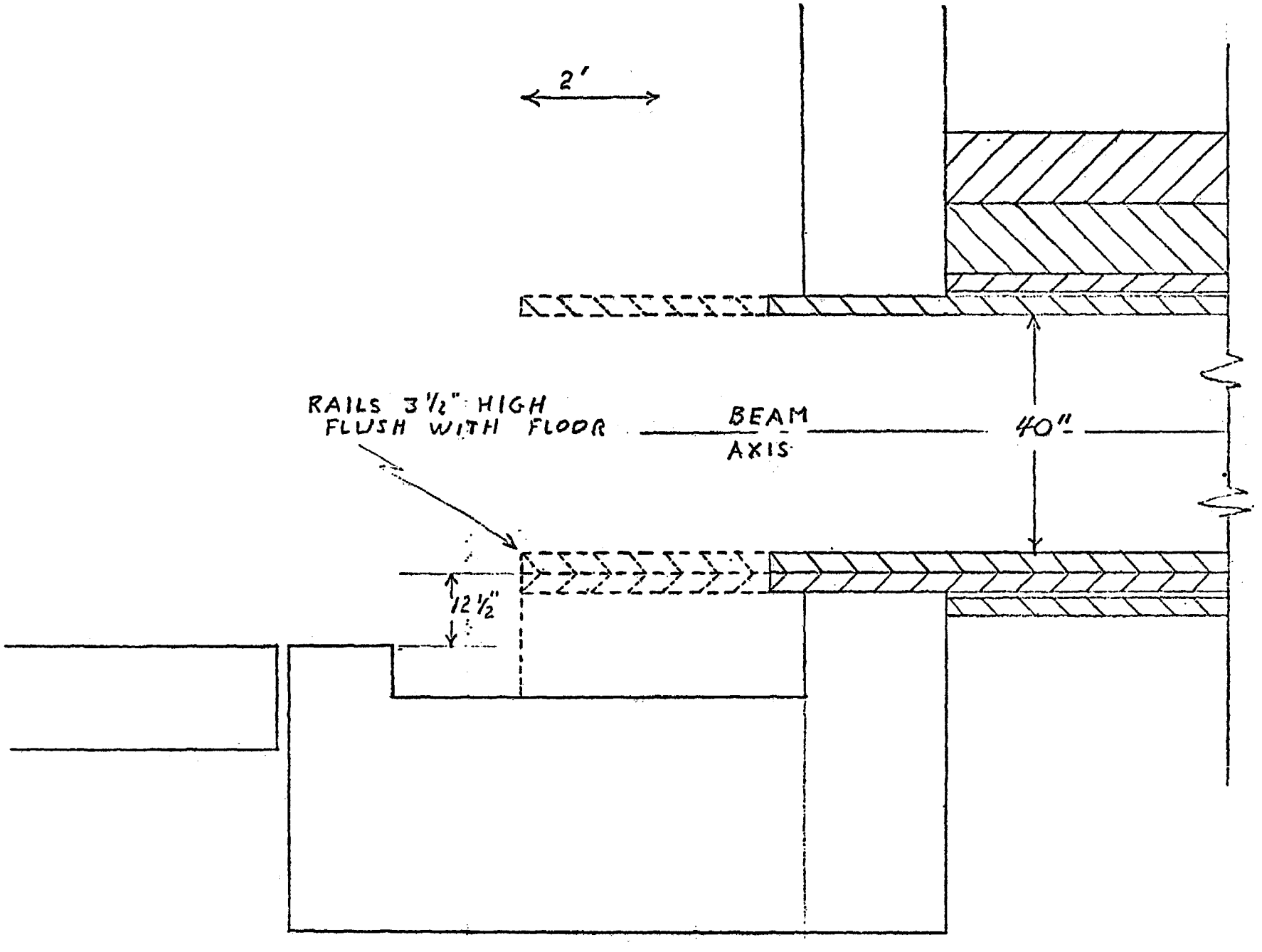

FIG 2

NATIONAL ACCELERATOR LABORATORY

ENGINEERING NOTE

SECTION	PROJECT	SERIAL-CATEGORY	PAGE
EXP FAC	NEUTRINO LAB		

SUBJECT: POSITIONING LOAD FOR ENTRANCE INTO TARGET BOX

NAME: R. STEFANSKI, W. MESTANDER

DATE: 1/18/71

REVISION DATE:

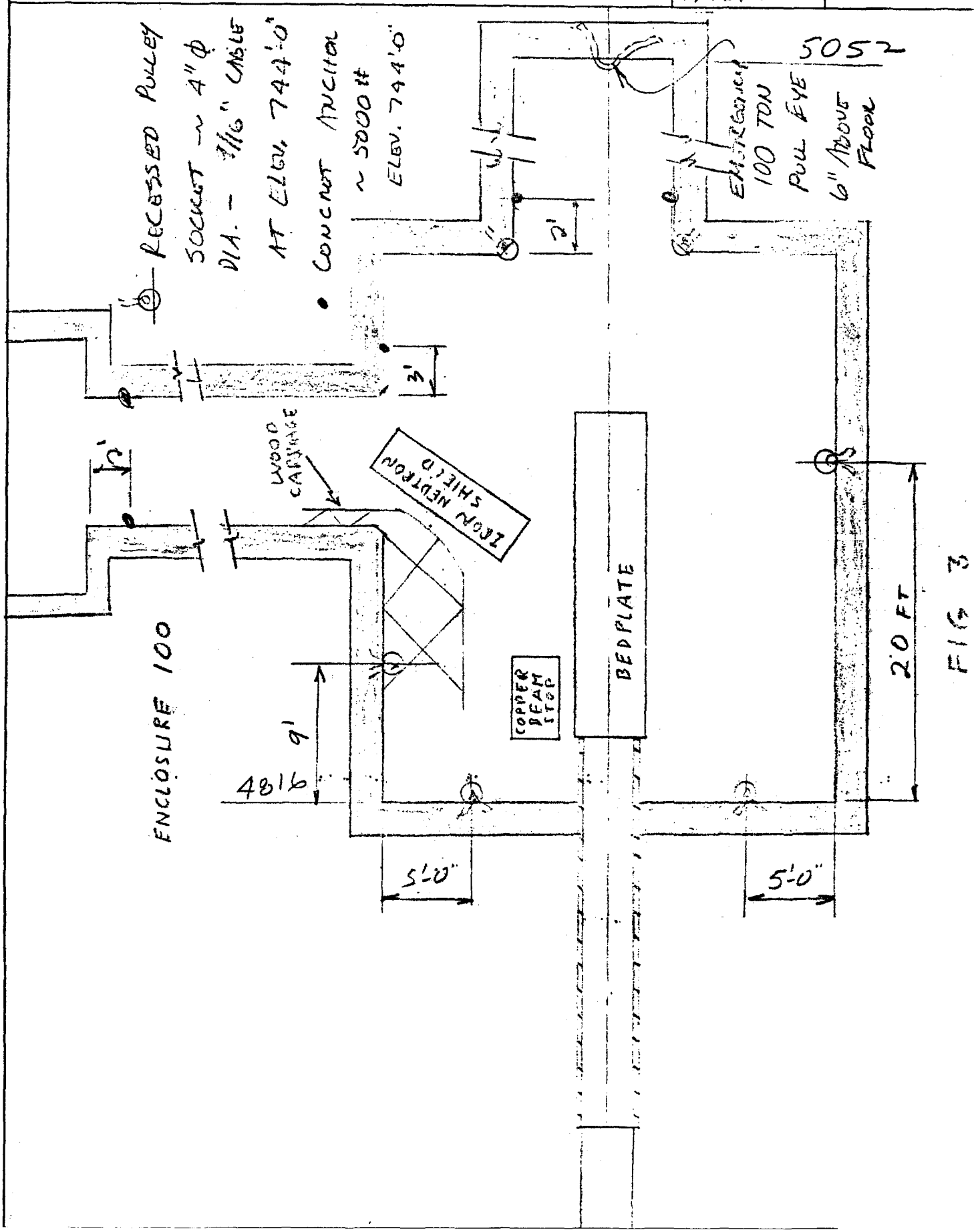

FIG 3

NATIONAL ACCELERATOR LABORATORY
ENGINEERING NOTE

SECTION	PROJECT	SERIAL-CATEGORY	PAGE
EXP FAC	NEUTRINO LAB		

SUBJECT: LOADING DOWN-STREAM TARGET BOX

NAME: R STEFANSKI

DATE: 1/18/71

REVISION DATE:

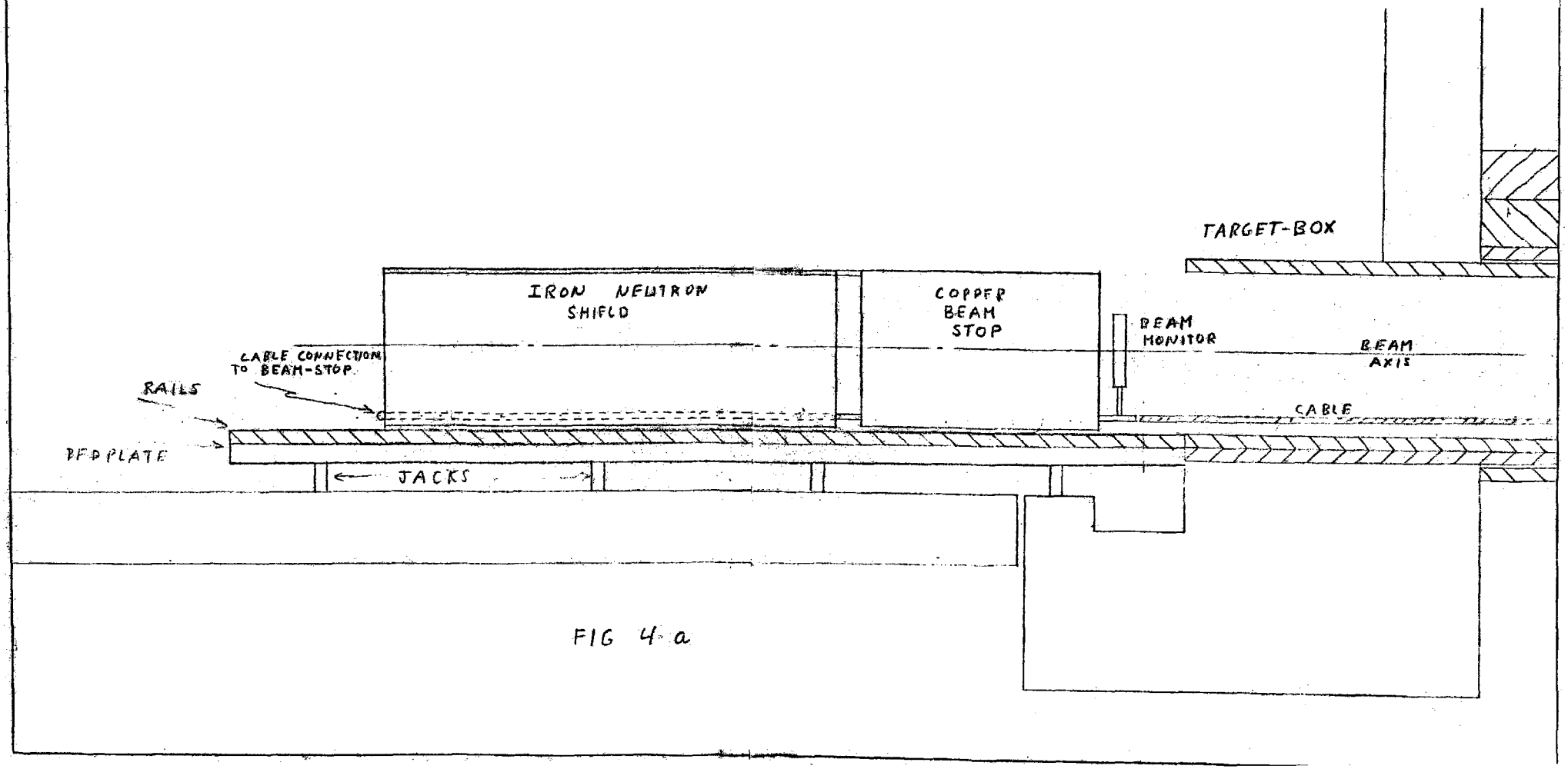

FIG 4-a

ENGINEERING NOTE	EXP FAC	LAB		1/1
SUBJECT: DOWN-STREAM TARGET BOX BEAM STOPPER AND NEUTRON SHIELD		NAME: R STEFANSKI		
		DATE: 1/18/71	REVISION DATE	

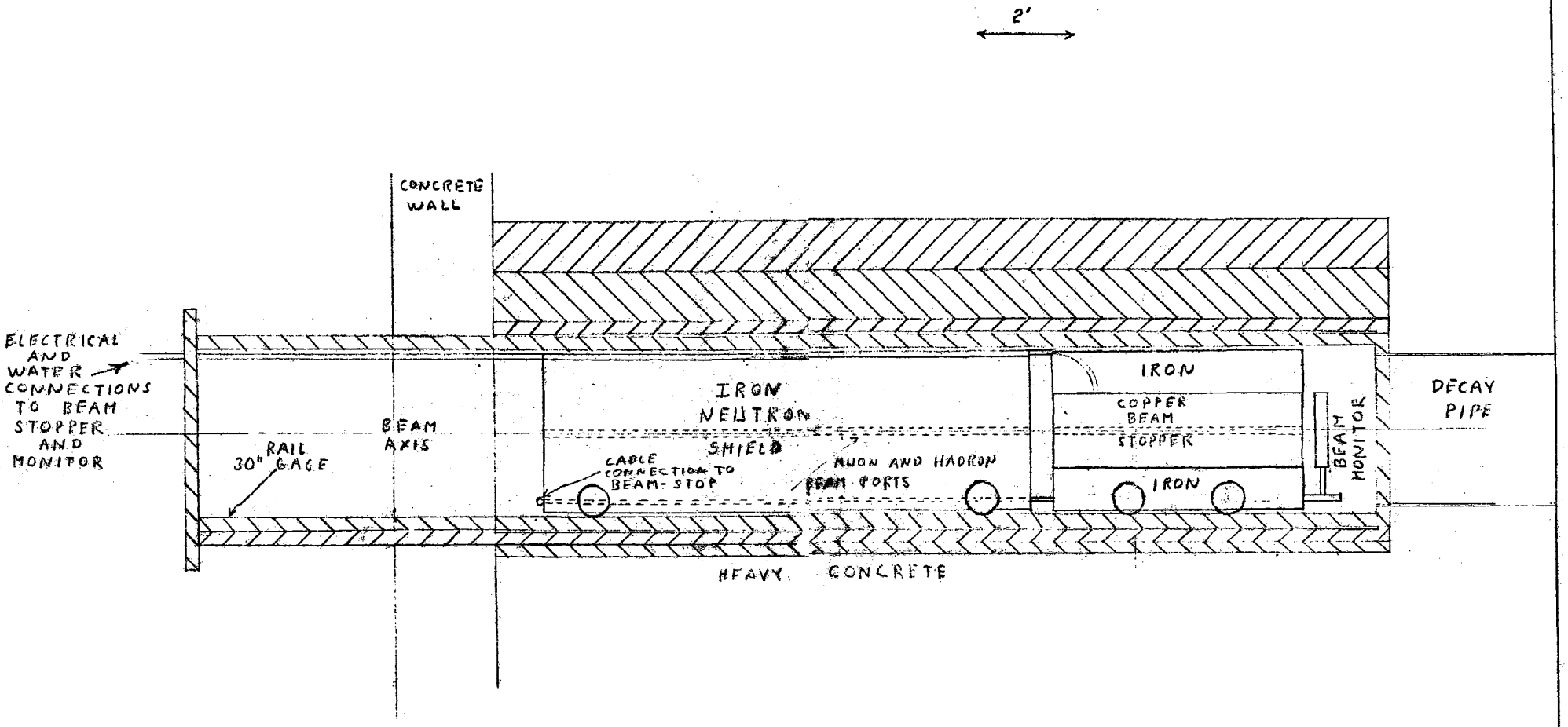

FIG 4b

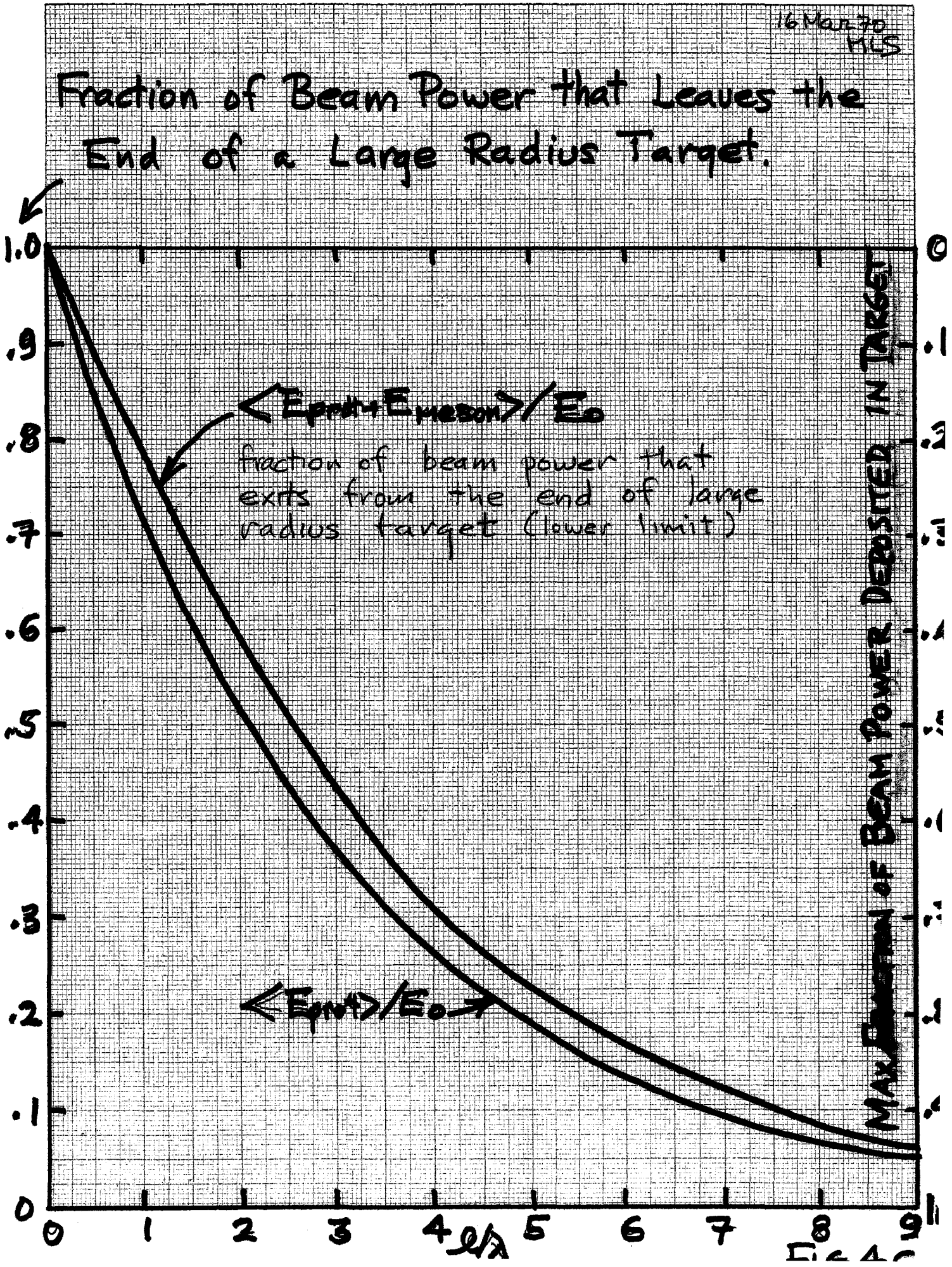
16 Mar 70
HLS
Fraction of Beam Power that Leaves the End of a Large Radius Target.
1.0
.9
.8
.7
.6
.5
.4
.3
.2
.1
0
0
1
2
3
4
5
6
7
8
9
ℓ/λ
<Eproton+Emeson>/Eo
fraction of beam power that exits from the end of large radius target (lower limit)
<Eproton>/Eo
MAXIMUM FRACTION OF BEAM POWER DEPOSITED IN TARGET

Fig 4c

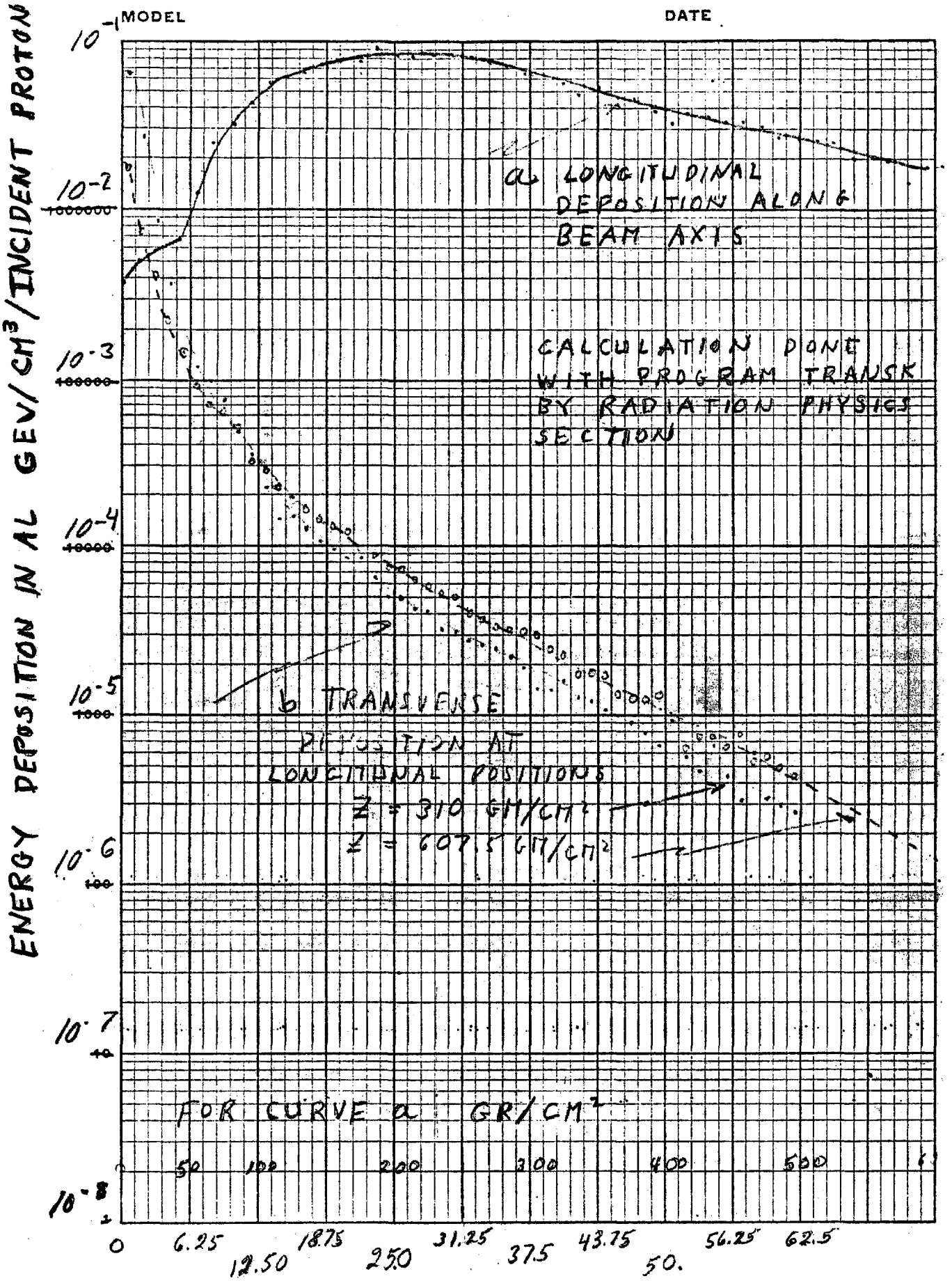
MODEL
DATE
ENERGY DEPOSITION IN AL GEV/CM³/INCIDENT PROTON
10⁻¹
10⁻²
10⁻³
10⁻⁴
10⁻⁵
10⁻⁶
10⁻⁷
10⁻⁸
a LONGITUDINAL DEPOSITION ALONG BEAM AXIS
CALCULATION DONE WITH PROGRAM TRANSK BY RADIATION PHYSICS SECTION
b TRANSVERSE DEPOSITION AT LONGITUDINAL POSITIONS
Z = 310 GM/CM²
Z = 607.5 GM/CM²
FOR CURVE a GR/CM²
0 50 100 200 300 400 500
0 6.25 12.50 18.75 25.0 31.25 37.5 43.75 50. 56.25 62.5
FOR CURVE b GM/CM²

Fig. 6

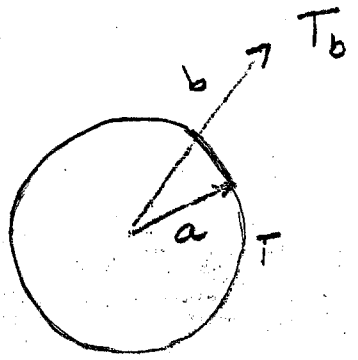

FIG 7

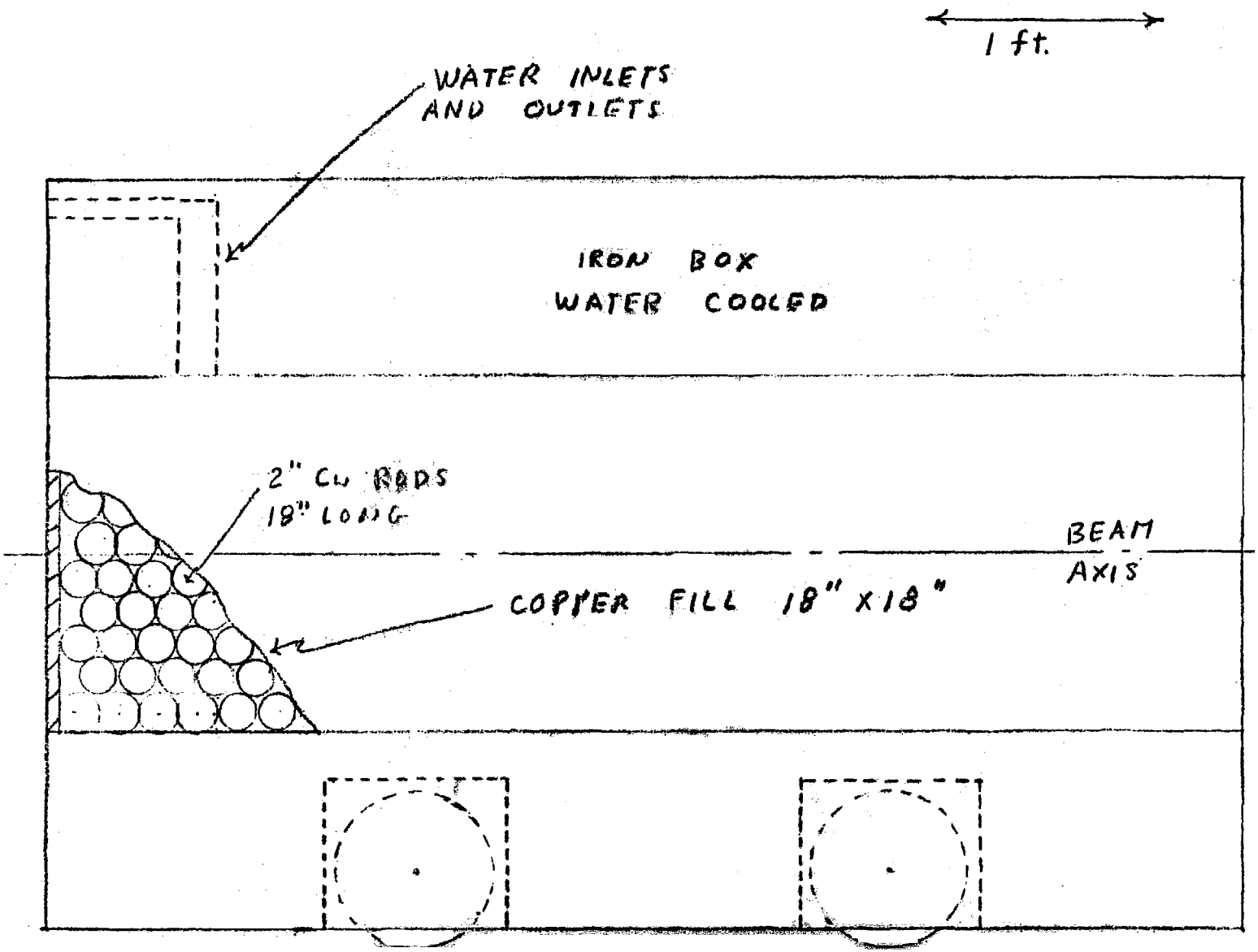
1 ft.
WATER INLETS AND OUTLETS
IRON BOX WATER COOLED
2" Cu RODS 18" LONG
BEAM AXIS
COPPER FILL 18" X 18"

FIG B

NATIONAL ACCELERATOR LABORATORY ENGINEERING NOTE	SECTION EXP FAC	PROJECT NEUTRINO LAB	SERIAL-CATEGORY	PAGE 1/1

SUBJECT	NAME	
DOWN STREAM TARGET BOX POSITION OF BEAM STOP	R STEFANSKI	
	DATE 1/18/71	REVISION DATE

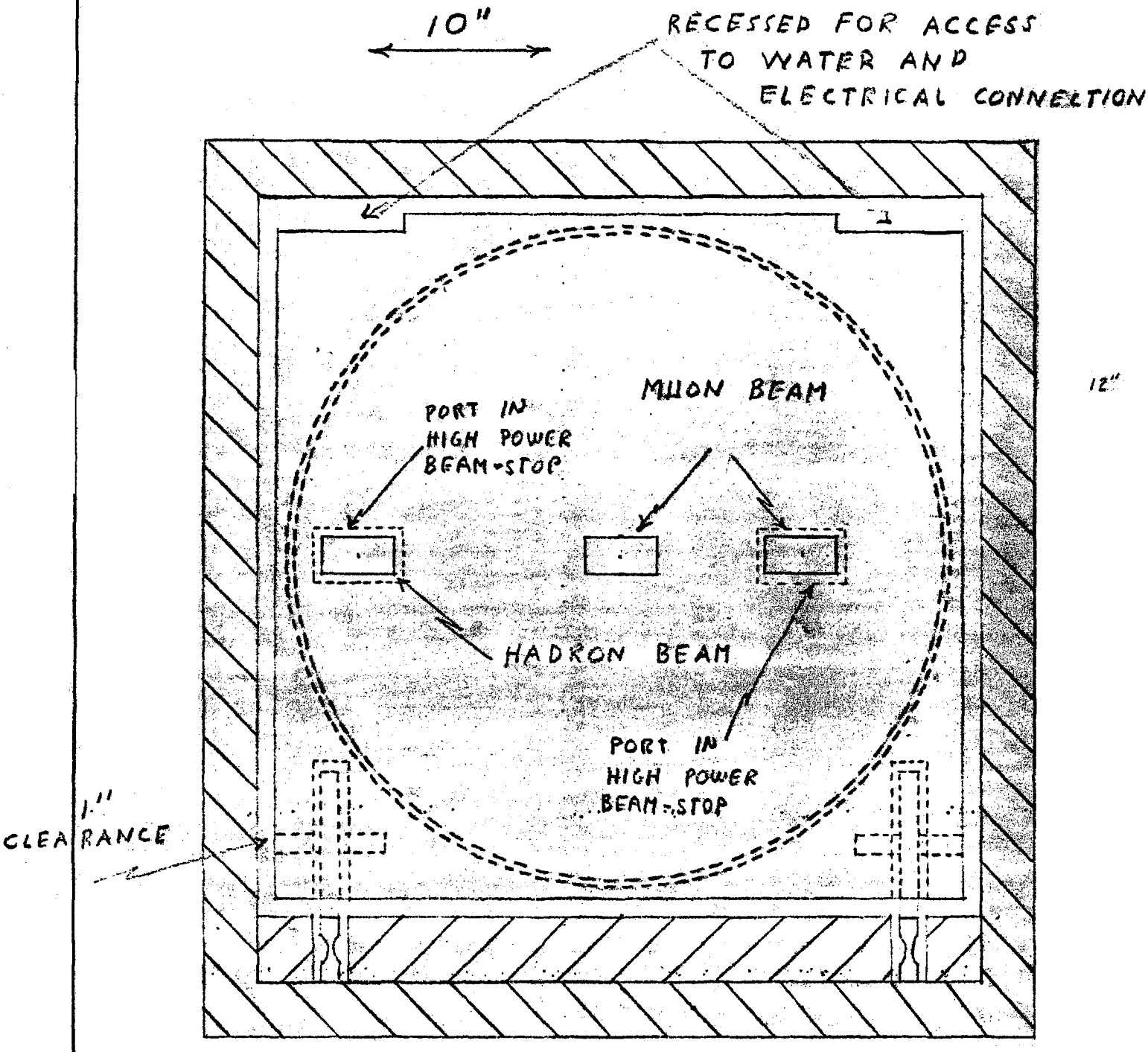

FIG 9

NATIONAL ACCELERATOR LABORATORY

ENGINEERING NOTE

EXP FAC	NEUTRINO LAB	

SUBJECT	NAME	
COPPER BEAM STOPPER	R STEFANSKI	
	DATE 1/18/71	REVISION DATE

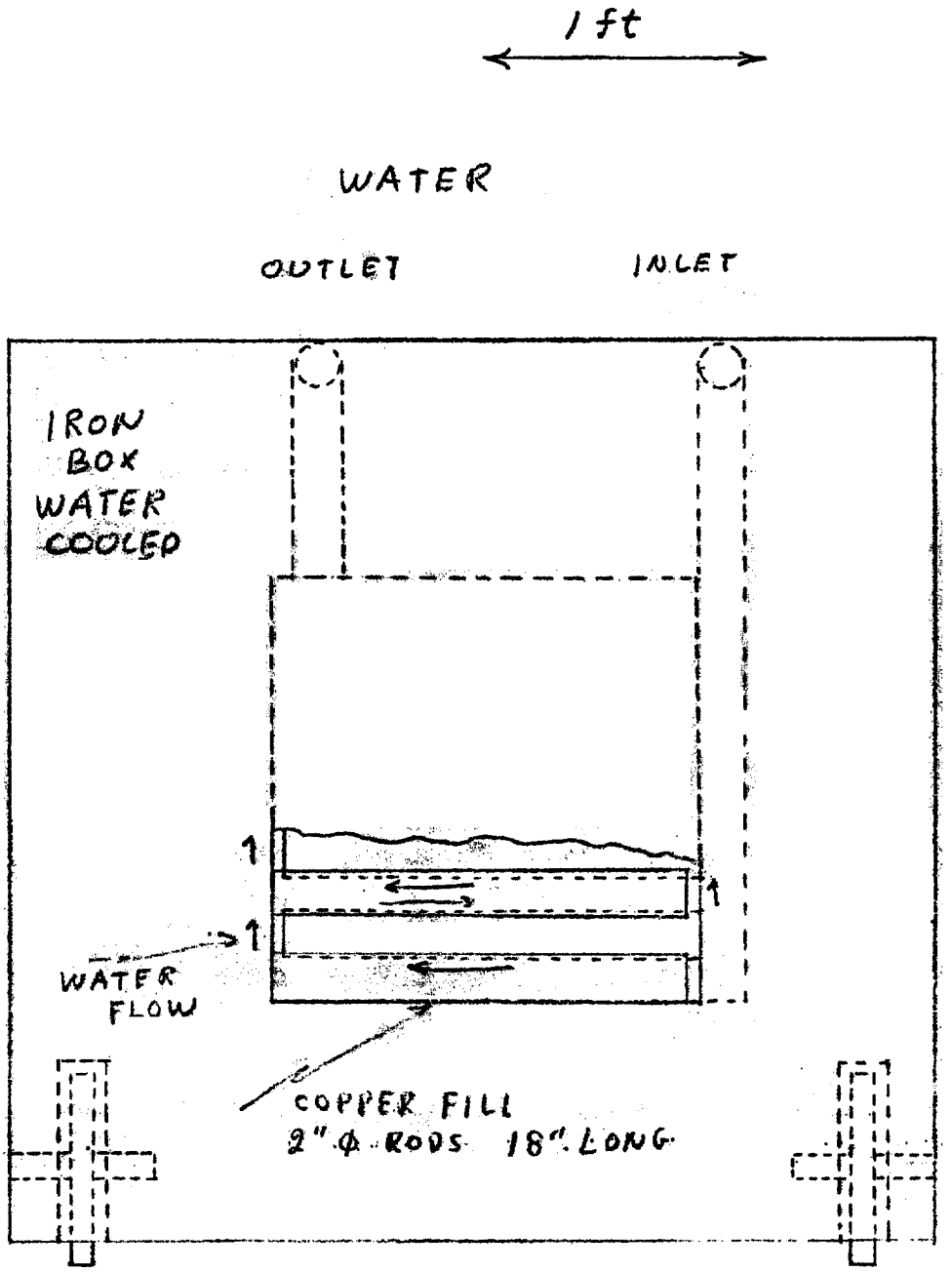

FIG 9 b

NATIONAL ACCELERATOR LABORATORY ENGINEERING NOTE	SECTION	PROJECT	SERIAL-CATEGORY	PAGE
	EXP FAC	NEUTRINO AREA		

SUBJECT	NAME	
VARIABLE DENSITY TARGET	R STEFANSKI	
	DATE 1/25/70	REVISION DATE

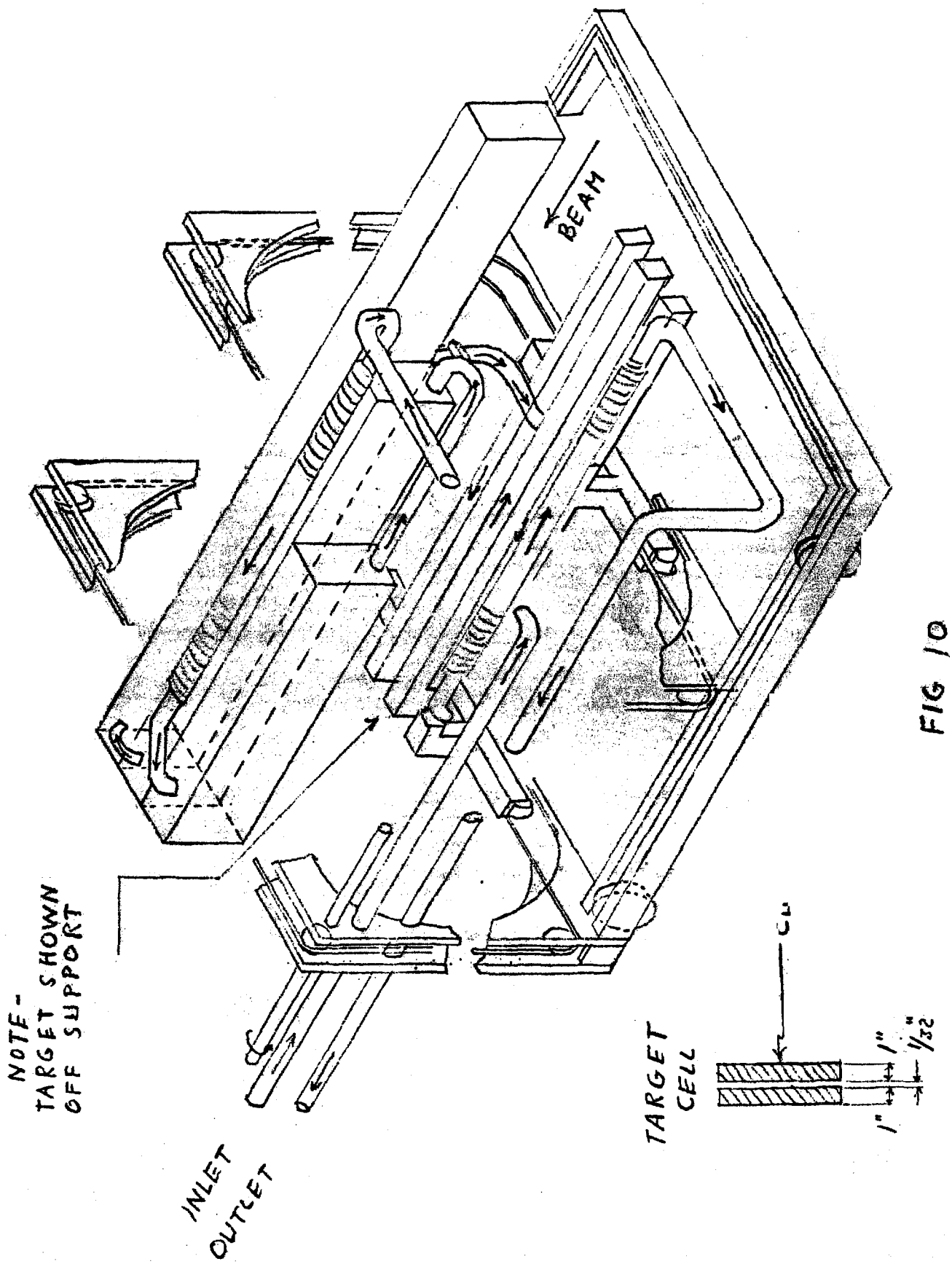

FIG 10