national accelerator laboratory

TM-465
0428

EFFECT OF FINITE SUSCEPTIBILITY OF SUPERCONDUCTING DIPOLE BANDING

S.C. Snowdon

January 4, 1974

PURPOSE

To extend the results of TM-464 which treats the effect of finite resistivity in stainless steel bands to the case in which the susceptibility is also finite. Only the case in which μ-1 and the band thickness is small will be treated fully. For a premeability of 1.001 the field distortion is less than $1 \div 10^6$ in the energy doubler dipole.

SCALAR POTENTIAL OF EXCITING CURRENTS

All geometrical quantities are shown in Fig. 1. The exciting current in the sheet at ρ=a is assumed to be

$$i_z = i_0 \cos\phi . \quad \text{(abA/cm)} \tag{1}$$

Since only magnetic quantities are involved the scalar potential is sufficient for this calculation. Thus

$$V = \begin{Bmatrix} A\rho \\ \frac{B}{\rho} \end{Bmatrix} \sin\phi \qquad \begin{matrix} 0<\rho<a \\ a<\rho<\infty \end{matrix} . \tag{2}$$

The fields are

$$H_\rho = \begin{Bmatrix} -A \\ \frac{B}{\rho^2} \end{Bmatrix} \sin\phi , \quad H_\phi = \begin{Bmatrix} -A \\ \frac{-B}{\rho^2} \end{Bmatrix} \cos\phi . \tag{3}$$

The boundary conditions at $\rho = a$ give

$$A = 2\pi i_0 \,, \qquad B = -\,2\pi i_0\, a^2 \tag{4}$$

FIELDS AND POTENTIALS FROM MAGNETIZING CURRENTS

The potential may be taken as

$$V = \sin\phi \begin{cases} \Sigma\, A_n\, I_1(\frac{n\pi\rho}{d})\, \sin\frac{n\pi z}{d} & 0<\rho<b \\ \Sigma[B_n\, I_1(\frac{n\pi\rho}{d}) + C_n\, K_1(\frac{n\pi\rho}{d})]\, \sin\frac{n\pi z}{d} & b<\rho<c \\ \Sigma\, D_n\, K_1(\frac{n\pi\rho}{d})\, \sin\frac{n\pi z}{d} & c<\rho<\infty. \end{cases} \tag{5}$$

From this potential the fields become

$$H_\rho = -\sin\phi \begin{cases} \Sigma\, \frac{n\pi}{d} A_n\, I_1'(\frac{n\pi\rho}{d})\, \sin\frac{n\pi z}{d} \\ \Sigma\, \frac{n\pi}{d}[B_n\, I_1'(\frac{n\pi\rho}{d}) + C_n\, K_1'(\frac{n\pi\rho}{d})]\, \sin\frac{n\pi z}{d} \\ \Sigma\, \frac{n\pi}{d}\, D_n\, K_1'(\frac{n\pi\rho}{d})\, \sin\frac{n\pi z}{b} \end{cases}, \tag{6}$$

$$H_\phi = -\cos\phi \begin{cases} \frac{1}{\rho}\, \Sigma\, A_n\, I_1(\frac{n\pi\rho}{d})\, \sin\frac{n\pi z}{d} \\ \frac{1}{\rho}\, \Sigma[B_n\, I_1(\frac{n\pi\rho}{d}) + C_n\, K_1(\frac{n\pi\rho}{d})]\, \sin\frac{n\pi z}{d} \\ \frac{1}{\rho}\, \Sigma\, D_n\, K_1(\frac{n\pi\rho}{d})\, \sin\frac{n\pi z}{d} \end{cases}, \tag{7}$$

and

$$H_z = -\sin\phi \left\{ \begin{array}{l} \Sigma \frac{n\pi}{d} A_n I_1(\frac{n\pi\rho}{d}) \cos \frac{n\pi z}{d} \\ \Sigma \frac{n\pi}{d} [B_n I_1(\frac{n\pi\rho}{d}) + C_n K_1(\frac{n\pi\rho}{d}) \cos \frac{n\pi z}{d} \\ \Sigma \frac{n\pi}{d} D_n K_1(\frac{n\pi\rho}{d}) \cos \frac{n\pi z}{d} \end{array} \right\} \tag{8}$$

BOUNDARY CONDITIONS

At $\rho = b$, $\mu H_\rho^+ = H_\rho^-$, or

$$\Sigma \frac{n\pi}{d} [(\mu B_n - A_n) I_1'(\frac{n\pi b}{d}) + \mu C_n K_1'(\frac{n\pi b}{d})] \sin \frac{n\pi z}{d} = \frac{\mu-1}{b^2} B, \tag{9}$$

and, $H_\phi^+ = H_\phi^-$, or

$$(A_n - B_n) I_1(\frac{n\pi b}{d}) - C_n K_1(\frac{n\pi b}{d}) = 0. \tag{10}$$

At $\rho = c$, $H_\rho^+ = \mu H_\rho^-$, or

$$\Sigma \frac{n\pi}{d} [\mu B_n I_1'(\frac{n\pi c}{d}) + (\mu C_n - D_n) K_1'(\frac{n\pi c}{d})] \sin \frac{n\pi z}{d} = \frac{\mu-1}{c^2} B, \tag{11}$$

and, $H_\phi^+ = H_\phi^-$, or

$$B_n I_1(\frac{n\pi c}{d}) - (D_n - C_n) K_1 (\frac{n\pi c}{d}) = 0. \tag{12}$$

Matching the tangential components $H_z^\pm$ gives the same conditions as matching the components $H_\phi^\pm$.

Since the band exists only over the central portion w of the repeat distance d, $\mu - 1$ in Eqs. (9) and (11) may be multiplied by

$$\left\{\begin{array}{ll} 0, & 0 < z < \frac{1}{2}(d-w) \\ 1, & \frac{1}{2}(d-w) < z < \frac{1}{2}(d+w) \\ 0, & \frac{1}{2}(d+w) < z < d \end{array}\right\} = \frac{4}{\pi} \sum_{n=1,3,5} \frac{1}{n} \sin \frac{n\pi}{2} \sin \frac{n\pi w}{2d} \sin \frac{n\pi z}{d} . \qquad (13)$$

Combining Eqs. (9-13) one has

$$- I_1'(\frac{n\pi b}{d})A_n + \mu I_1'(\frac{n\pi b}{d})B_n + \mu K_1'(\frac{n\pi b}{d})C_n = \frac{4}{\pi^2} \frac{d}{b^2} \frac{\mu-1}{n^2} \sin \frac{n\pi}{2} \sin \frac{n\pi w}{2d} B, \qquad (14)$$

$$\mu I_1'(\frac{n\pi c}{d})B_n + \mu K_1'(\frac{n\pi c}{d})C_n - K_1'(\frac{n\pi c}{d})D_n = \frac{4}{\pi^2} \frac{d}{c^2} \frac{\mu-1}{n^2} \sin \frac{n\pi}{2} \sin \frac{n\pi w}{d} B, \qquad (15)$$

$$I_1(\frac{n\pi b}{d})A_n - I_1(\frac{n\pi b}{d})B_n - K_1(\frac{n\pi b}{d})C_n = 0 , \qquad (16)$$

$$I_1(\frac{n\pi c}{d})B_n - K_1(\frac{n\pi c}{d})C_n - K_1(\frac{n\pi c}{d})D_n = 0 . \qquad (17)$$

COEFFICIENTS

Equations (14-17) may be solved directly. For the purpose at hand, however, only A_n is needed. Furthermore, for $\mu \sim 1$ and $c \sim b$, appropriate approximations will be made using

$$v = \frac{n\pi b}{d} , \qquad \Delta v = \frac{n\pi}{d} (c-b), \qquad (18)$$

$$I_1(\frac{n\pi c}{d}) = I_1 (v) + \Delta v \, I_1' (v) + \cdots , \qquad (19)$$

$$K_1(\frac{n\pi c}{d}) = K_1 (v) + \Delta v \, K_1' (v) + \cdots , \qquad (20)$$

and

$$\frac{1}{c^2} = \frac{1}{b^2}\left(1 - 2\,\frac{c-b}{b}\right) + \cdots \quad . \tag{21}$$

The determinant of the coefficients in Eqs. (14-17) is

$$\Delta = -\frac{\mu}{v^2}\left(1 - \frac{\Delta v}{v}\right) - (\mu - 1)\left[I_1'(v)K_1'(v) + \mu\left(1 + \frac{1}{v^2}\right)I_1(v)K_1(v)\right]\frac{\Delta v}{v} + \cdots , \tag{22}$$

Hence

$$\Delta A_n = \frac{4}{\pi^2}\,\frac{d}{n^2}\,(\mu - 1)\,\sin\frac{n\pi}{2}\,\sin\frac{n\pi w}{d}\,B \begin{vmatrix} \frac{1}{b^2}\,\mu I_1'(b) & \mu K_1'(b) & 0 \\ \frac{1}{c^2}\,\mu I_1'(c) & \mu K_1'(c) & -K_1'(c) \\ 0 & -I_1(b) & -K_1(b) \\ 0 & I_1(c) & K_1(c) \end{vmatrix} , \tag{23}$$

which, when approximated gives

$$A_n = 8\pi i_0\,\frac{a^2}{bd}\,K_2\left(\frac{n\pi b}{2}\right)\,\sin\frac{n\pi}{2}\,\sin\frac{n\pi w}{2d}\cdot(\mu - 1)(c - b) \tag{24}$$

MEDIAN PLANE FIELD

On the median plane ($\phi = 0$) one has

$$H_y(x,z) = -2\pi i_0 - \frac{1}{x}\,\Sigma_n\,A_n\,I_1\left(\frac{n\pi x}{d}\right)\,\sin\frac{n\pi z}{d} \quad . \tag{25}$$

Averaging this over z gives

$$\left\langle H_y(x)\right\rangle_{Av} = -2\pi i_0 - \frac{2}{\pi x}\,\Sigma_n\,\frac{1}{n}\,A_n\,I_1\left(\frac{n\pi x}{d}\right) , \tag{26}$$

which, after expanding in x gives

$$\langle H_y(x)\rangle_{Av} = -2\pi i_0 - \frac{1}{d}\Sigma A_n[1 + \frac{1}{2}(\frac{n\pi x}{2d})^2 + \cdots]. \quad (27)$$

At x = 0 one has

$$\frac{\Delta H}{H} = \frac{H_y(0)_{Av} - (-2\pi i_0)}{-2\pi i_0} = \frac{\Sigma A_n}{2\pi i_0 d} \quad (28)$$

and

$$\frac{H''}{H} = \frac{\langle H_y(0)\rangle_{Av}}{-2\pi i_0} = \frac{\pi \Sigma n^2 A_n}{8 i_0 d^3} \quad . \quad (29)$$

NUMERICAL RESULTS

In order to apply to the doubler dipole put

$a = 1.1325" = 2.8766$ cm $\qquad b = 2.0" - .375" = 4.1275$ cm

$c = 2.0" - .375" + .100" = 4.3815$ cm $\qquad d = 1.0" = 2.54$ cm

$w = .375" = .9525$ cm $\qquad \mu = 1.001$

$H_0 = 45$ kG

This gives

$a/b = .6969 \qquad (c-b)/b = .06154 \qquad \pi b/d = 5.1051$

$\sin \frac{\pi w}{2d} = .5556 \qquad K_2(5.1051) = .00470 \qquad i_0 = H_0/2\pi = 7162$ abA/cm

or

$A_1 = 8\pi 7162 x .6969 x .6969 x 1.625 x .0047 x .5556 x .001 x .254 = .0942$ abA

A_n = negligible for n = 3, 5, 7, etc. because of $K_2(5.1051\ n)$.

Hence

$$\frac{\Delta H}{H} = .0942/45000/2.54 = .82\text{x}10^{-6}$$

$$H''/H = \pi^2 \text{ x } .82\text{x}10^{-6}/4 = 2.03\text{x}10^{-6}/\text{in/in.}$$

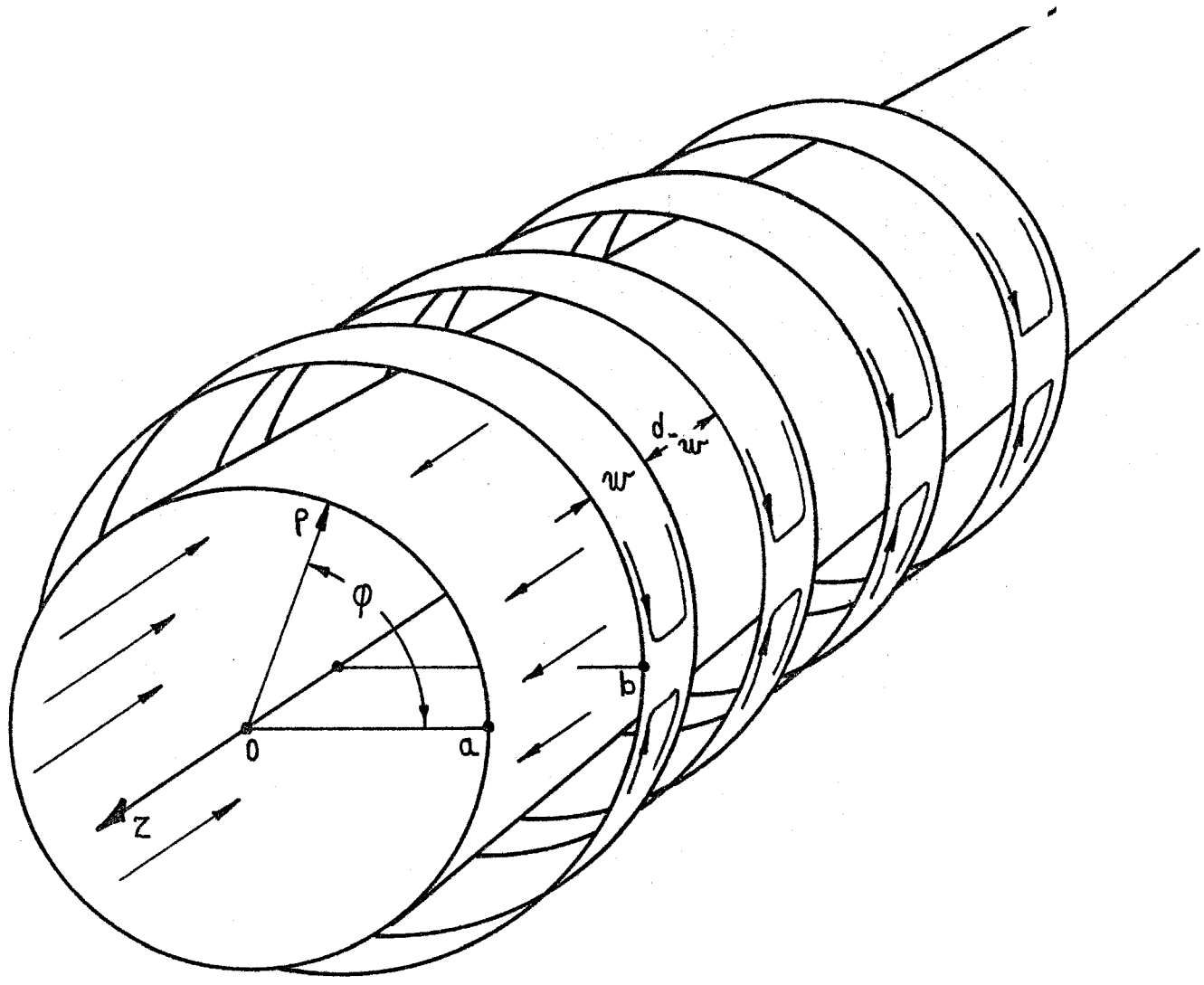

FIG. 1. GEOMETRICAL ARRANGEMENT OF EXCITATION CURRENT SHEET AND EDDY CURRENT BANDS.