national accelerator laboratory

TM-423
2701

DESIGN GUIDE FOR LIQUID HYDROGEN TARGETS UP TO 35 LITERS

R. W. Fast and M. A. Otavka

August, 1973

This revised document supercedes TM-349, "Design Guide for Liquid Hydrogen Filled Targets", February, 1972

Operated by Universities Research Association Inc. Under Contract with the United States Atomic Energy Commission

CONTENTS

		Page
1.	General Remarks	1
2.	Specific Design Guidelines	1
3.	System Testing, Installation and Operation	5
4.	Special Target Systems	7

"The Cryogenic Safety Subcommittee of the NAL Safety Committee has reviewed this Technical Memorandum and concurs with the policy outlined therein."

Halsey L. Allen, Chairman
August, 1973

DESIGN GUIDE FOR LIQUID HYDROGEN TARGETS UP TO 35 LITERS

1. General Remarks

1.1 Liquid hydrogen targets for use at NAL will, in general, be refrigerated flasks of small volume. NAL will have 10 watt, 20°K refrigerators available for assignment to target systems up to six liters. A sketch of a typical two liter target with 10W refrigerator is shown in Fig. 1 and a photo in Fig. 2. Figure 3 is a plumbing diagram of the system. Figures 4, 5 and 6 show, respectively, the control console, gas handling pump cart and refrigerator compressor module.

1.2 Some experiments may require target volumes of up to 35 liters. The Laboratory has available 50W, 20°K refrigerators for these systems. Figure 7 shows the refrigerator and Figure 8, its Freon cooler. The plumbing diagram is shown in Figure 9. The pump cart and control console are the same as for the ten watt system.

1.3 This guide is intended to specify features of target systems of up to 35 liters. Larger refrigerated targets and all reservoir filled targets must be considered on an individual basis.

1.4 Research Services Section of NAL will maintain a target design and fabrication capability available to all Users.

1.5 Experimenters who intend to provide their own targets should design them in accordance with this guide and are urged to coordinate the design and testing through the appropriate beam line liaison physicist. Research Services Section is also available for assistance.

1.6 A target designed and used at another laboratory and brought to NAL should meet these criteria.

1.7 The "Procedures for Experimenters" manual may also be consulted for target design and safety criteria.

2. Specific Design Guidelines

2.1 Liquid hydrogen flask

2.1.1 Typical geometry: Circular cylinder with dished heads on ends.

2.1.2 Acceptable materials: Mylar or Kapton film, Teflon, Kel-F, Vespel, epoxy fiberglass (G-10 and G-11), 300-series stainless, copper, brass and aluminum.

2.1.3 Design pressure: Failure at not less than 40 psia internal at 77°K, with 0 psia external. A prototype flask shall be tested to failure at 77°K to insure that this criteria is satisfied.

2.1.4 Test pressure: 40 psia internal, with 15 psia external, at 77°K.

2.1.5 Relief pressure: 20 psia internal.

2.1.6 Normal operating pressure: 15 psia internal, 0 psia external.

2.1.7 Multilayer insulation: a minimum of 20 layers of 0.00025 inch aluminized Mylar film is applied to the flask to reduce the heat load to the hydrogen system.

2.1.8 Liquid level resistors: at top and bottom of flask. The liquid level circuit should be "intrinsically safe" as defined by the National Electrical Code.

2.2 Internal liquid hydrogen reservoir

2.2.1 Purpose is to store the liquid hydrogen from the target within the refrigerator cryostat to allow "target empty" experiments.

2.2.2 Volume is at least equal to volume of flask.

2.2.3 Connected directly to the flask.

2.2.4 Material: 300-series stainless.

2.2.5 Design pressure: Failure at not less than 200 psia internal at 77°K, with 0 psia external.

2.2.6 Normal operating pressure: 15 psia internal, 0 psia external.

2.2.7 Liquid level resistors: at top and bottom.

2.2.8 The liquid hydrogen volume in the flask and reservoir is to be equipped with a relief valve (RV-3). The relief valve shall be a) 0.25 in. ID for hydrogen volumes up to 6 liters and b) 0.5 in. ID for volumes of 6 to 35 liters. The line leading to the relief valve shall be unrestricted and of the same inner diameter as the valve.

2.3 Target/refrigerator cryostat

2.3.1 This is the outer vacuum container. The "target cryostat" encloses the hydrogen flask; the "refrigerator cryostat" encloses the refrigerator, internal reservoir and piping. The two cryostats have common vacuum. The cryostat is designed to contain the hydrogen in case of flask failure.

2.3.2 Typical geometry: Target cryostat: metal cylinder with end windows; metal box with window along side or bottom, end windows.

2.3.3 Acceptable materials: Windows, aluminum, 300-series stainless, Mylar or Kapton film; body, 300-series stainless, copper, brass or aluminum.

2.3.4 Design pressure: Body--failure at not less than 200 psia internal, with 15 psia external.

2.3.5 Design pressure: Windows--failure at 65 psia internal at 300°K, with 15 psia external. Cryostats designed for window failure at lower pressure will be considered on an individual basis.

2.3.6 Test procedure; with windows: a. 15 psia external, 0 psia internal. b. 15 psia external, 40 psia internal. c. Prototype tested to failure, with 15 psia external.

2.3.7 Relief pressure: 1 mm Hg gauge internal.

2.3.8 Normal operating pressure: 0 psia internal, 15 psia external.

2.3.9 Ratio of liquid volume to vacuum volume. The volume of the vacuum space should be equal to about 50 times the target liquid volume. For example, a 2-liter target should have a total vacuum space, target cryostat plus refrigerator cryostat, of about 100 liters. With a vacuum space accordingly sized, a flask rupture should generate an initial pressure in the vacuum space of 15 psia or less. Subsequent expansion of the hydrogen gas should take place through the rupture disk vent line.

2.3.10 If this ratio cannot be achieved, the design of the cryostat and vacuum relief system will be submitted to NAL for review. Depending on the actual ratio and the system design, special requirements for the immediate environment of the target may be stipulated.

2.3.11 The vacuum system shall be equipped with a rupture disc assembly (RV-1) as shown on NAL drawing 2726.001-ME-7810. The disc shall be at least two inches in diameter for targets up to six liters. For targets larger than six liters, the disc shall have an area equal to 0.5 in^2 per liter of liquid in the system. The discharge of this rupture disc shall be piped to a point where hydrogen can be safely released into the environment. The diameter of the line connecting the disc with the vent point shall be the same as of the rupture disc. The line shall be unrestricted over its full length.

2.4 Hydrogen gas system

2.4.1 Hydrogen gas supplied to the target shall contain less than 50 ppm total impurities. The supply source shall be analyzed for purity upon receipt by the laboratory with a mass spectrometer.

2.4.2 Hydrogen gas is admitted to the system through a pressure reducing valve or regulator with a flow capacity not exceeding 2 scfm. The supply line connecting the hydrogen source with the target shall be equipped with a valve operated from a pressure switch. The switch will close this valve when the pressure in the target exceeds 17.5 psia. A manual reset will open the valve, when the pressure in the target has been reduced below 17.5 psia.

2.4.3 The valve in the supply line between hydrogen gas source and target is also controlled by a pressure switch on the cryostat vacuum. The valve will close when the pressure in the vacuum space exceeds 50 microns absolute.

2.4.4 During operation of the target, the hydrogen supply gas system will be maintained at a pressure above atmospheric by means of the regulator mentioned above. A pressure switch will sound an alarm when this pressure drops below 15.5 psia.

2.5 Vacuum pump system

2.5.1 If a high vacuum pump (diffusion or ion pump) is used to pump the insulating vacuum space, an automatic shutoff valve shall be used to isolate the pump from the vacuum space. This valve shall close when the pressure reaches 10^{-3} torr.

2.5.2 An interlock device shall be installed which will prevent evacuating the target flask if the insulating vacuum is greater than 50 microns. The purpose of this device is to eliminate the possibility of imploding the target flask.

3. System Testing, Installation and Operation

3.1 Before fabrication of the target the design will be reviewed by NAL to assure compliance with this guide. The following information will also be made available for review:

3.1.1 Operating procedure, including startup and shut-down.

3.1.2 Flow diagram and electrical schematics.

3.1.3 Failure mode analysis outlining the probable events and consequences following failure of a single component of the system.

3.1.4 Emergency procedures required to put the system in a safe condition after failure of a component has occurred.

3.2 All target systems will be tested at NAL under operating conditions prior to installation in the beam line. During the test, equipment will undergo at least the following: (1) Filling and steady state operation for 24 hours, including transfer of the liquid from flask to reservoir. (2) Pressure test of the flask at 25°K without liquid to 25 psia internal, 0 psia external. (3) Loss of all AC power. Any previous test results for targets brought by experimenters from their home institutions may be submitted to NAL to expedite installation.

3.3 Installation

3.3.1 All target system equipment shall be installed by or under the supervision of NAL personnel. The User may assist in the installation.

3.3.2 The refrigerator compressor module and pump cart for the target shall be located in one area and at floor level, more than ten feet from target. The electronics control rack shall be located more than ten feet from the target.

3.3.3 Electronics equipment (counters, etc.) within 10 feet of the target must meet the requirements of National Electrical Code, Class I, Group B, Division 2, except as specified in 3.3.4.

3.3.4 The use of an enclosure around the target may allow placement of non Class I electrical equipment inside the 10 foot zone of 3.3.3. The enclosure is designed to contain all hydrogen released in any incident. All electrical equipment inside the enclosure must be rated for Class I, Group B, Division 2.

3.4 Operation, manipulation and maintenance

3.4.1 Operation of the target system includes only a) shut-down, b) restart of an operating target or c) moving the liquid from flask to reservoir and vice versa.

3.4.2 Manipulation of the target includes only a) moving the liquid from the flask to the reservoir for background measurements, and vice versa, or b) moving the target cryostat with a manipulator to expose different flasks to the beam. This manipulation is understood to be part of the data taking process and does not include alignment of the target or gross relocation of the entire system.

3.4.3 The individual experimental laboratory section may have procedures whereby an experimenter is permitted to operate and manipulate his target system, but reserves the right to operate any target and limit the experimenter to manipulation only.

3.4.4 Copies of the appropriate operating guide for the target system will be made available to all Users.

3.4.5 Initial start-up of the target system shall be by or under the supervision of Research Services personnel. The User may assist in the start-up if authorized by the experimental laboratory section.

3.4.6 Adequate records shall be maintained during the operation of any target.

3.4.7 NAL, through the Cryogenics Group of Research Services Section, will provide supervision, assistance and maintenance as required.

4. Special target systems for which this guide applies.

4.1 The system may include multiple hydrogen flasks of different diameter or length, arranged in series or parallel.

4.2 The system may include a liquid deuterium flask in addition to the liquid hydrogen flask. Two separate gas handling systems are required and two refrigerators may be assigned to such a system. Figures 10 and 11 are plumbing diagrams of two fluid systems using 10W and 50W refrigerators respectively.

4.3 Users are encouraged to consult with NAL Research Services Section regarding special or unusual target requirements. These conversations should begin well in advance of the experiment turn-on date.

REFRIGERATED LIQUID HYDROGEN TARGET ASSEMBLY

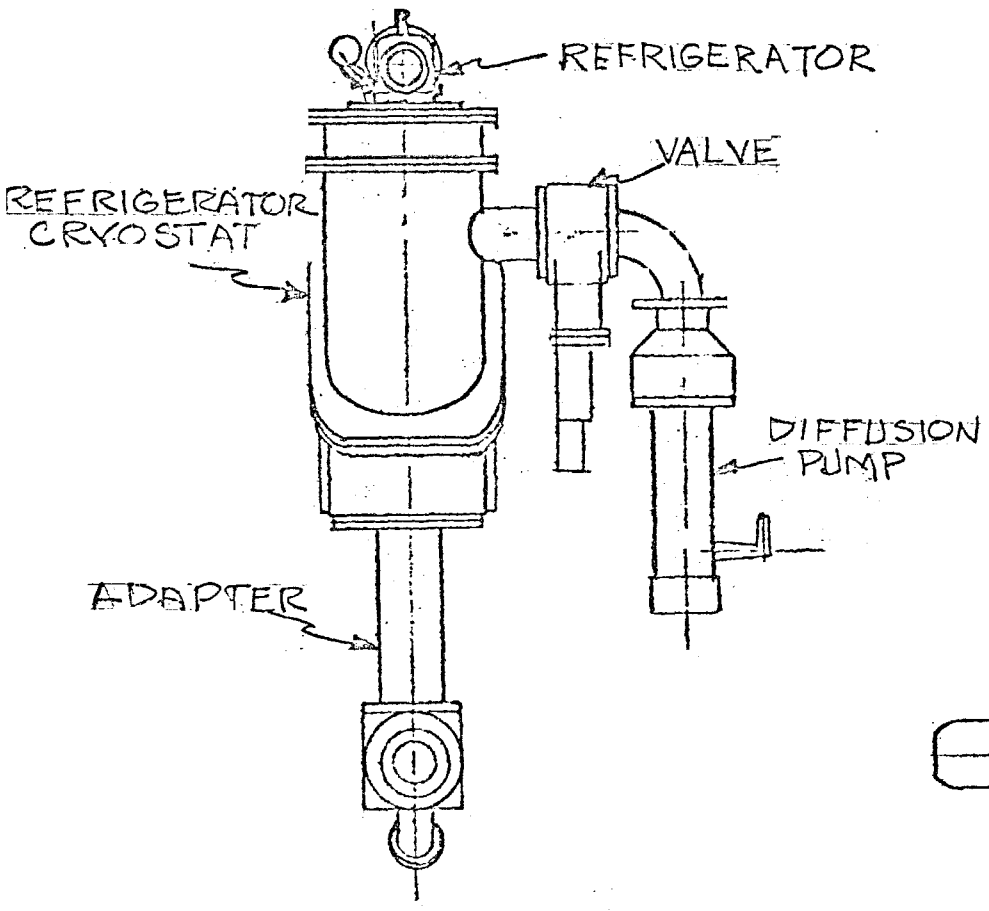

VIEW UPSTREAM

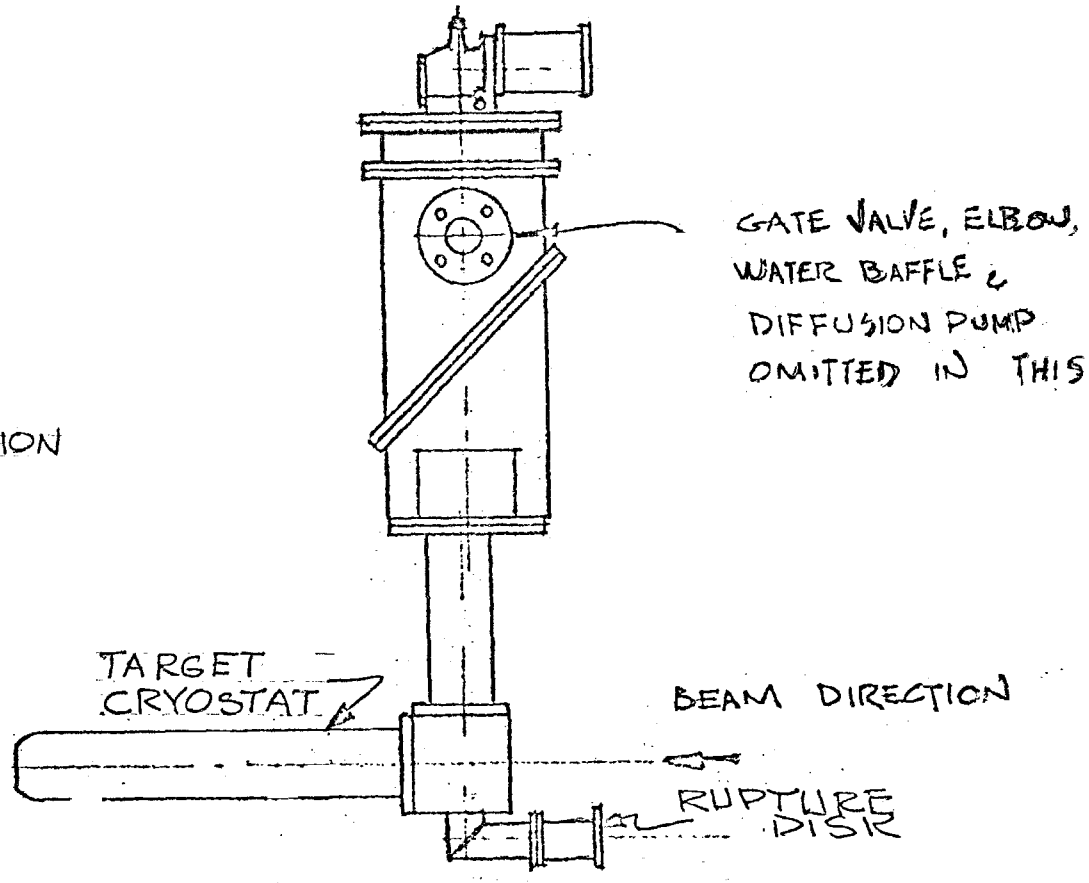

TARGET ORIENTATION

SCALE 1" = 1'-0"

Fig 1

TM-423
2701

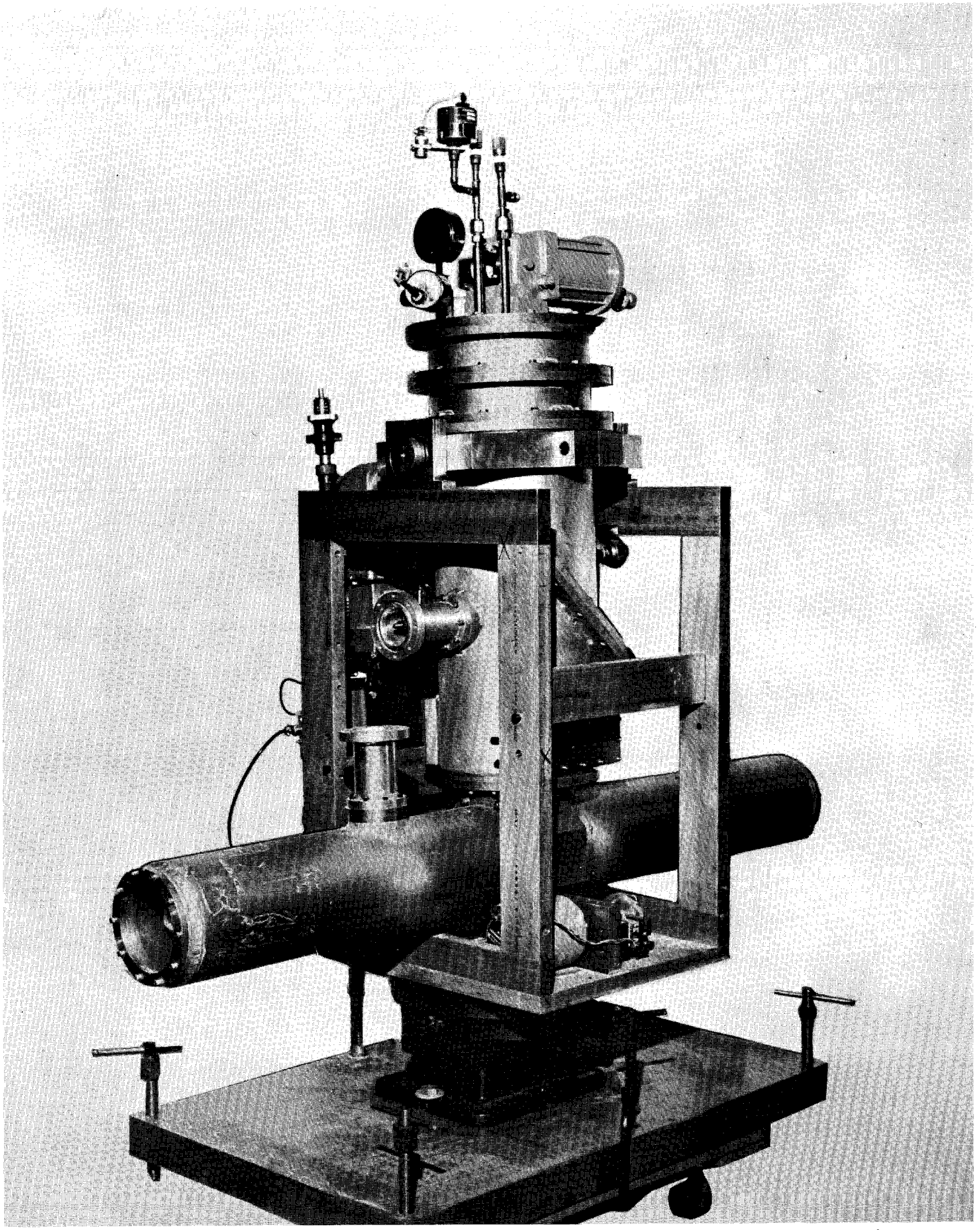

Fig. 2

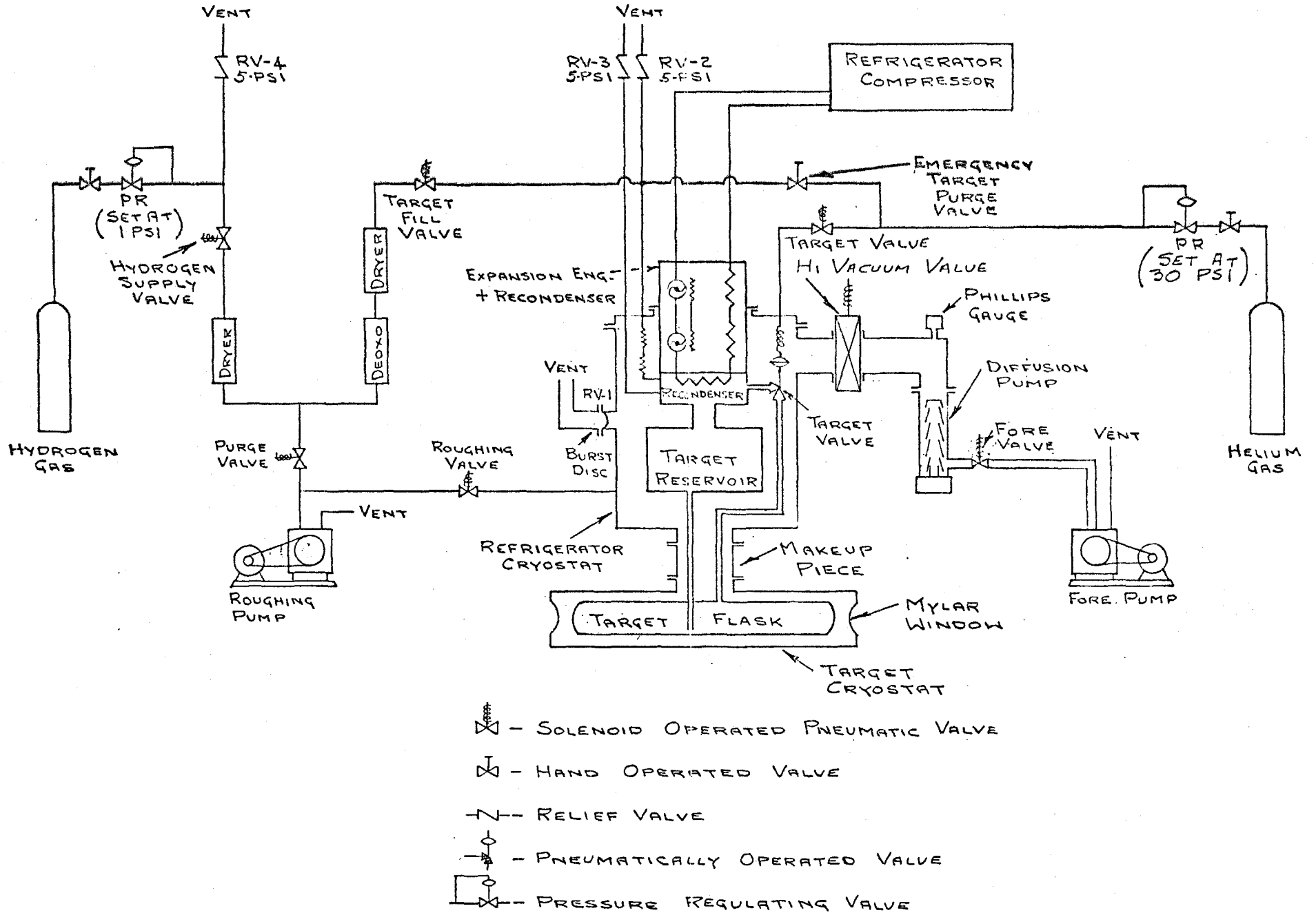

Fig. 3

Fig. 3

TM-423
2701

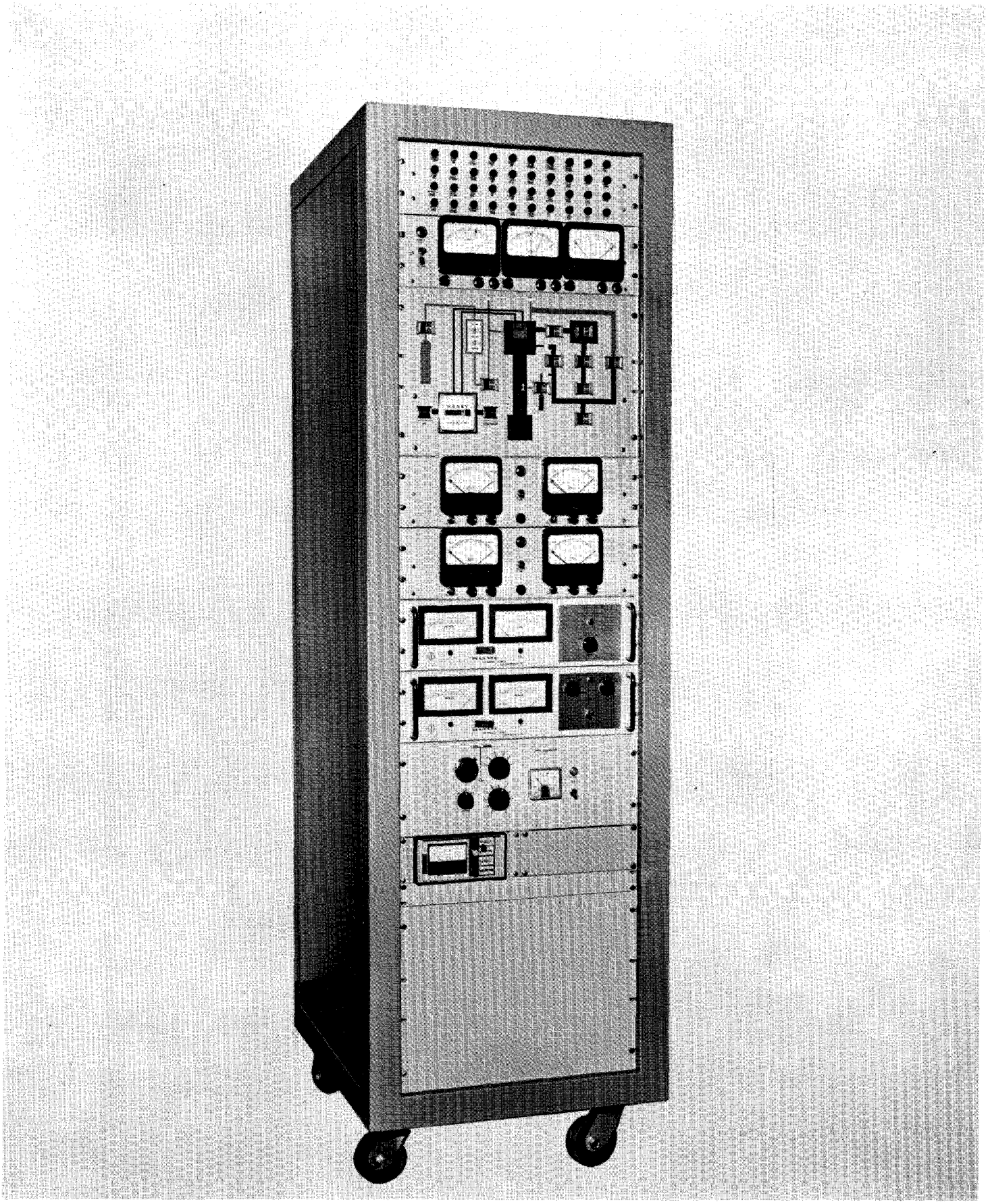

Fig. 4

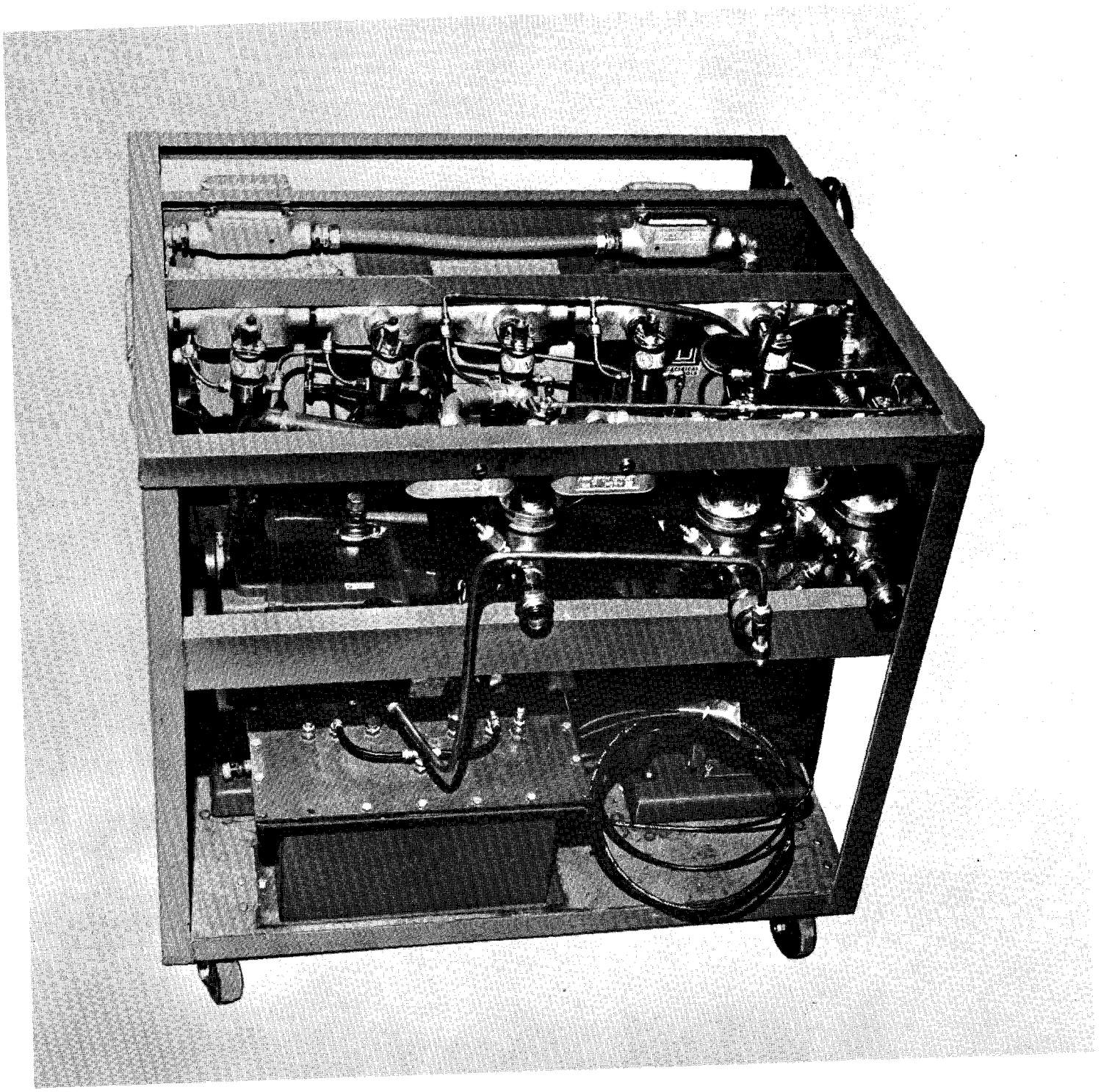

Fig. 5

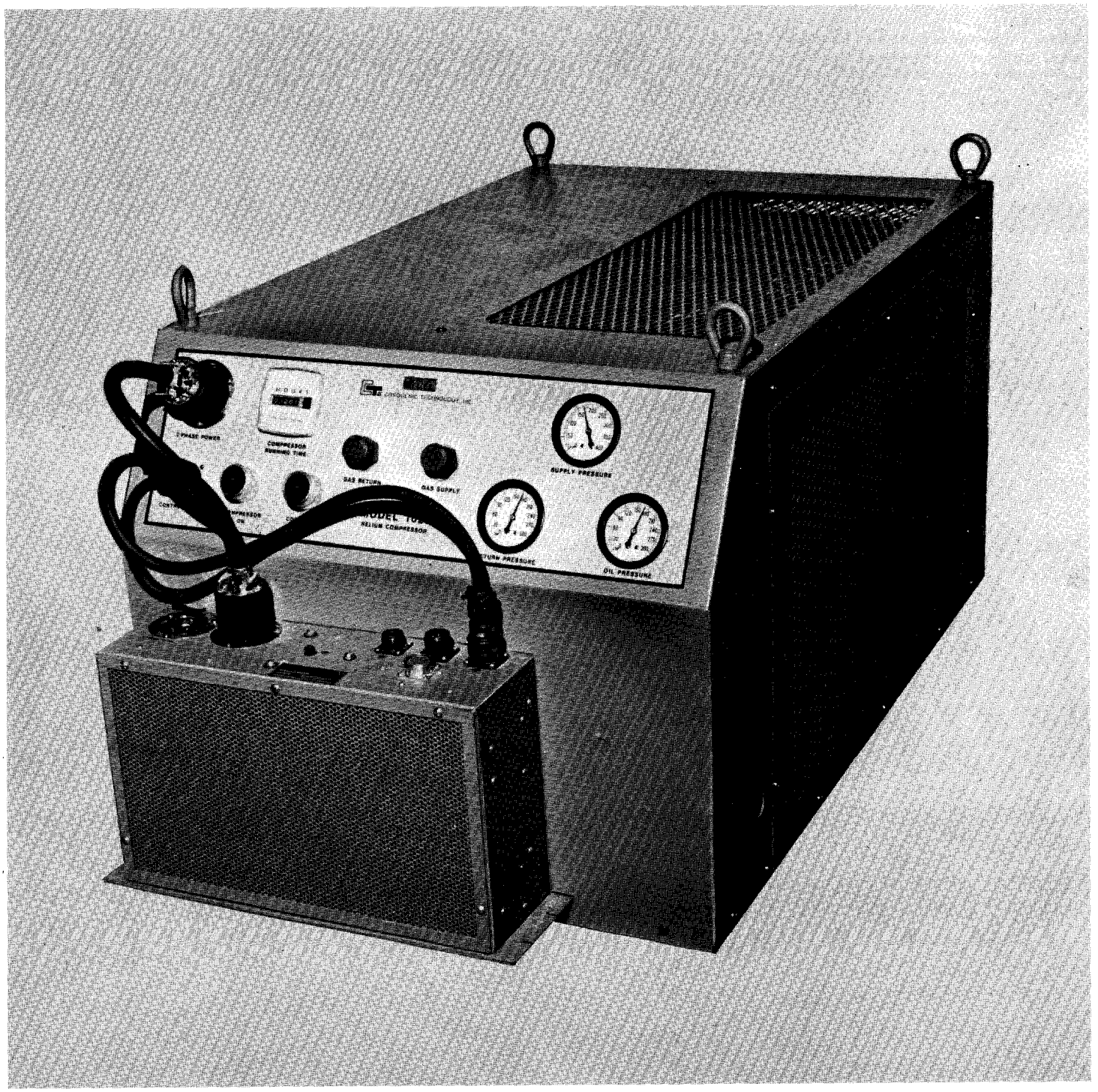
3 PHASE POWER
COMPRESSOR RUNNING TIME
GAS RETURN
GAS SUPPLY
SUPPLY PRESSURE
RETURN PRESSURE
OIL PRESSURE
HELIUM COMPRESSOR

Fig. 6

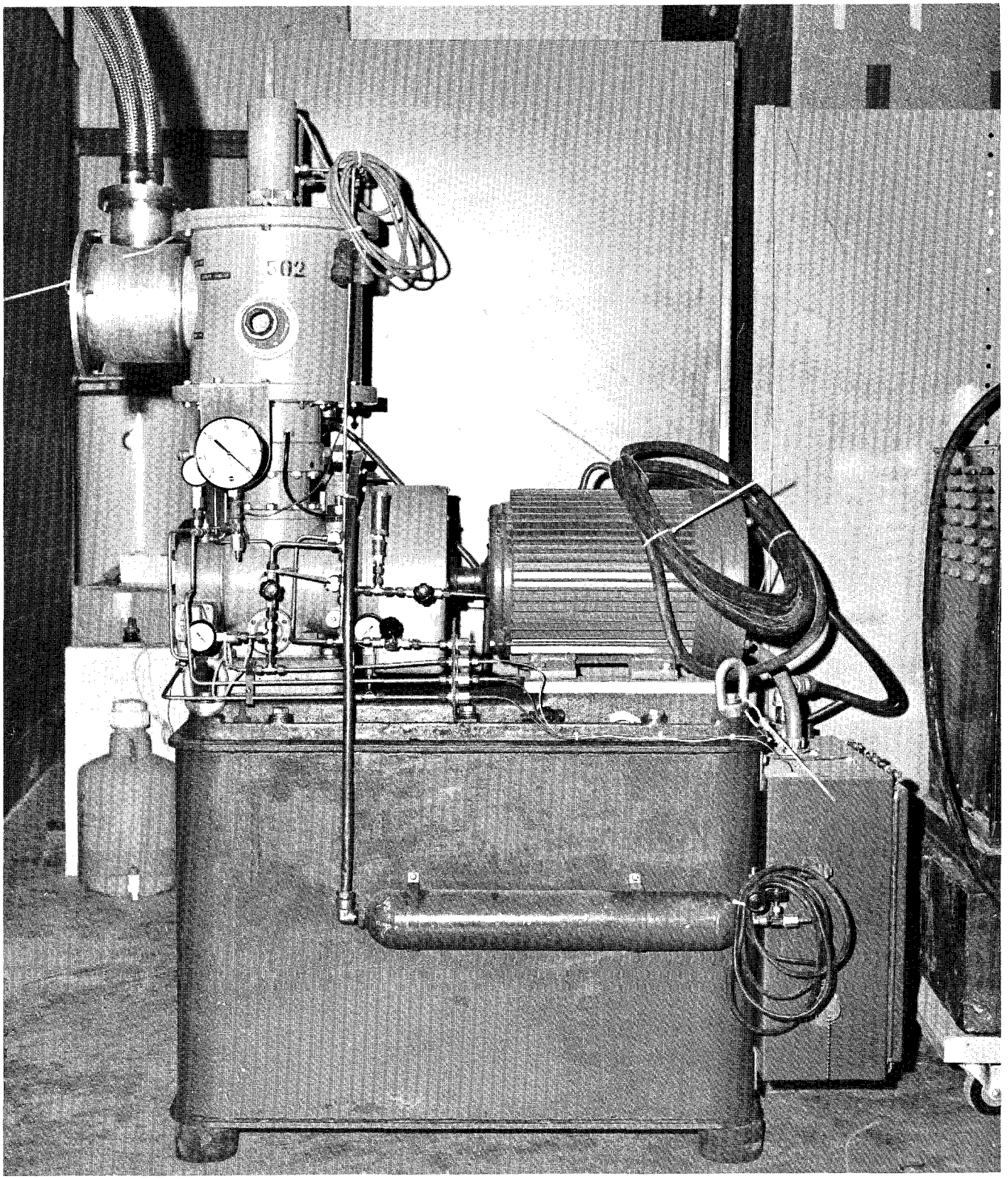

Fig. 7

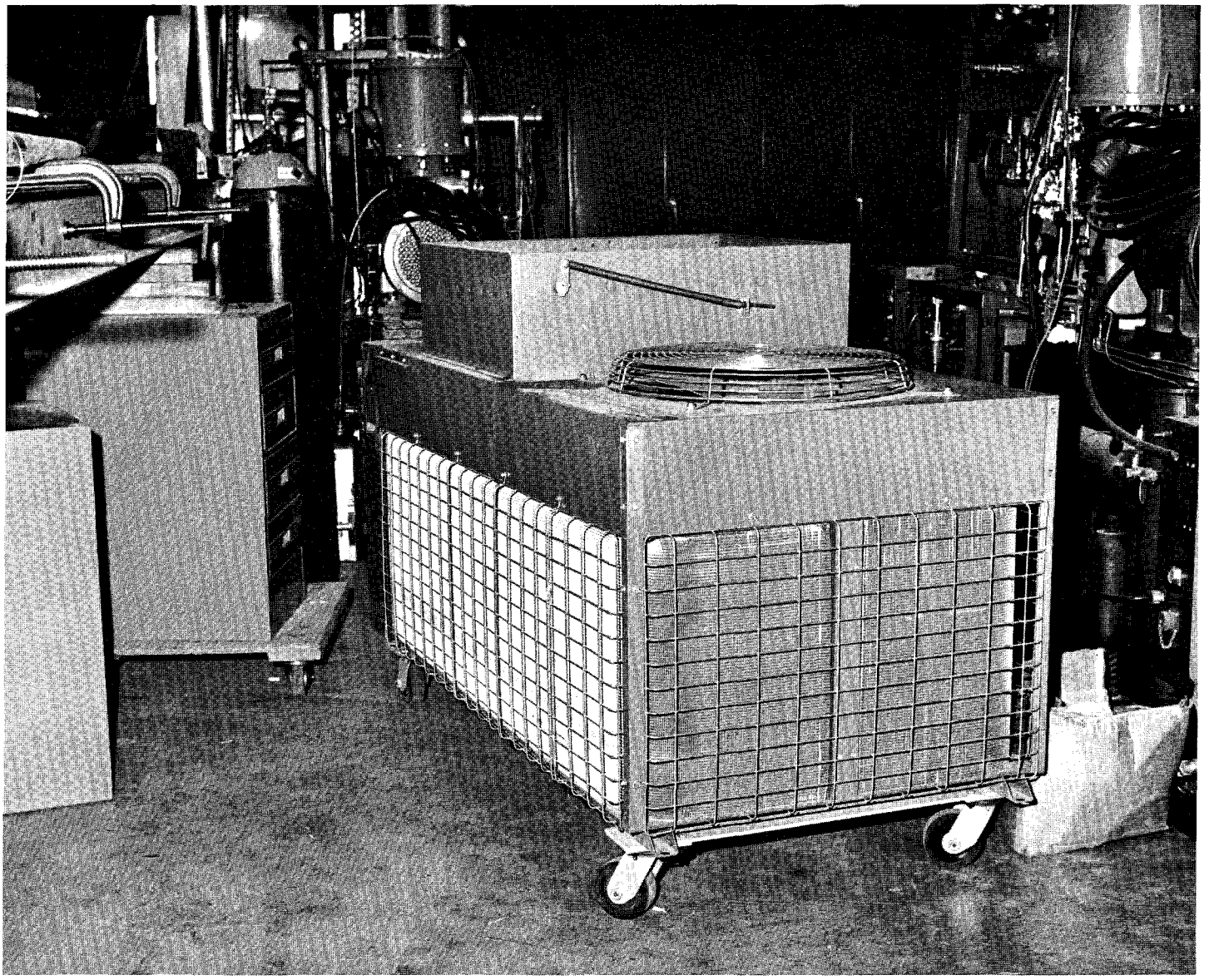

Fig. 8

REVISIONS				
SYM	DESCRIPTION	DRAWN / APPD.	DATE / DATE	FILMED

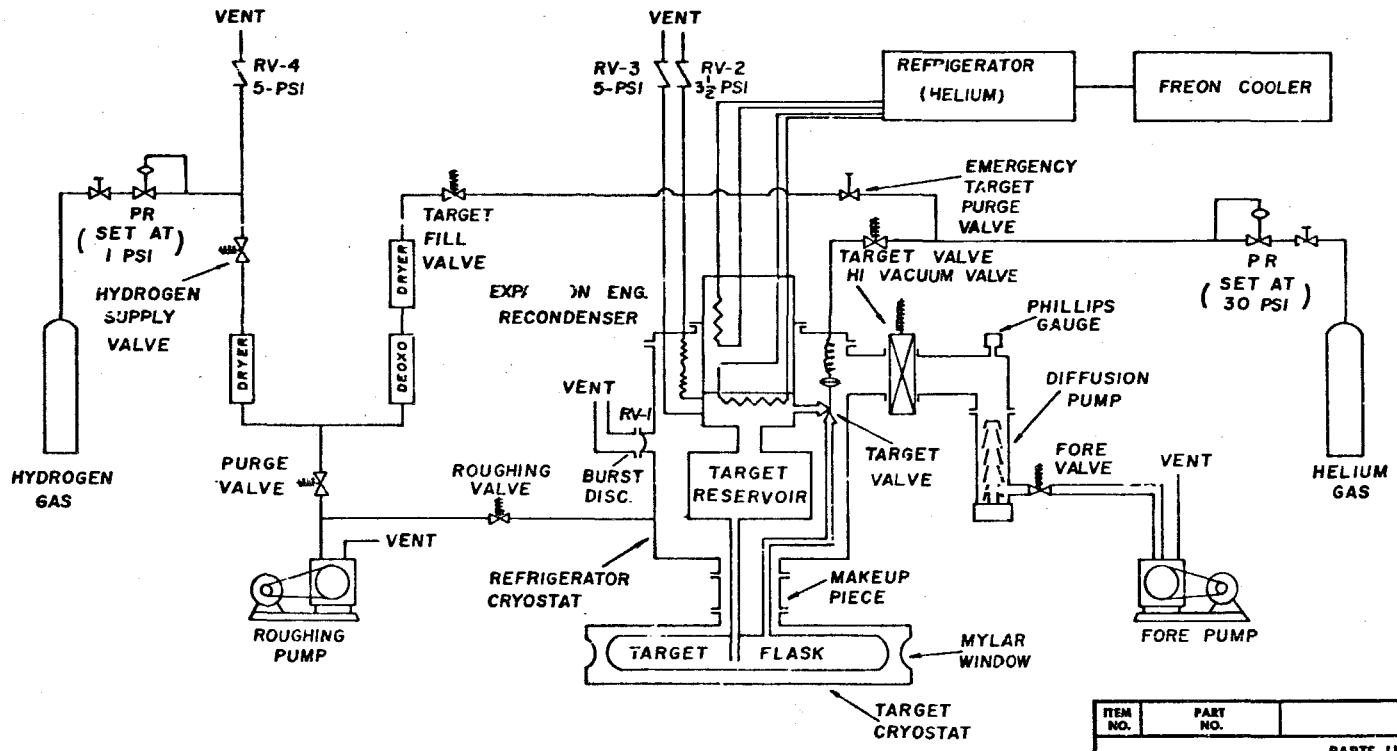

SOLENOID OPERATED PNEUMATIC VALVE

HAND OPERATED VALVE

RELIEF VALVE

PNEUMATICALLY OPERATED VALVE

PRESSURE REGULATING VALVE

ITEM NO.	PART NO.	DESCRIPTION	QTY. REQ.
		PARTS LIST	

UNLESS OTHERWISE SPECIFIED		ORIGINATOR	M OTAVKA
FRACTIONS	DECIMALS	ANGLES	DRAWN	M. OTAVKA
±	±	±	CHECKED	
1. BREAK ALL SHARP EDGES 1/64 MAX.		APPROVED	
2. DO NOT SCALE DWG.		APPROVED	
3. DIMENSIONING IN ACCORD WITH USASI Y14.5 STD'S.		USED ON	
MAX. ALL MACHINED SURFACES		MATERIAL-	

NATIONAL ACCELERATOR LABORATORY
U.S. ATOMIC ENERGY COMMISSION

50 WATT HYDROGEN TARGET
SCHEMATIC

SCALE	FILMED	DRAWING NUMBER	REV.
		2714.000-MC-45276	

BRUNING 40-107—

Fig. 9

TM-423
2701

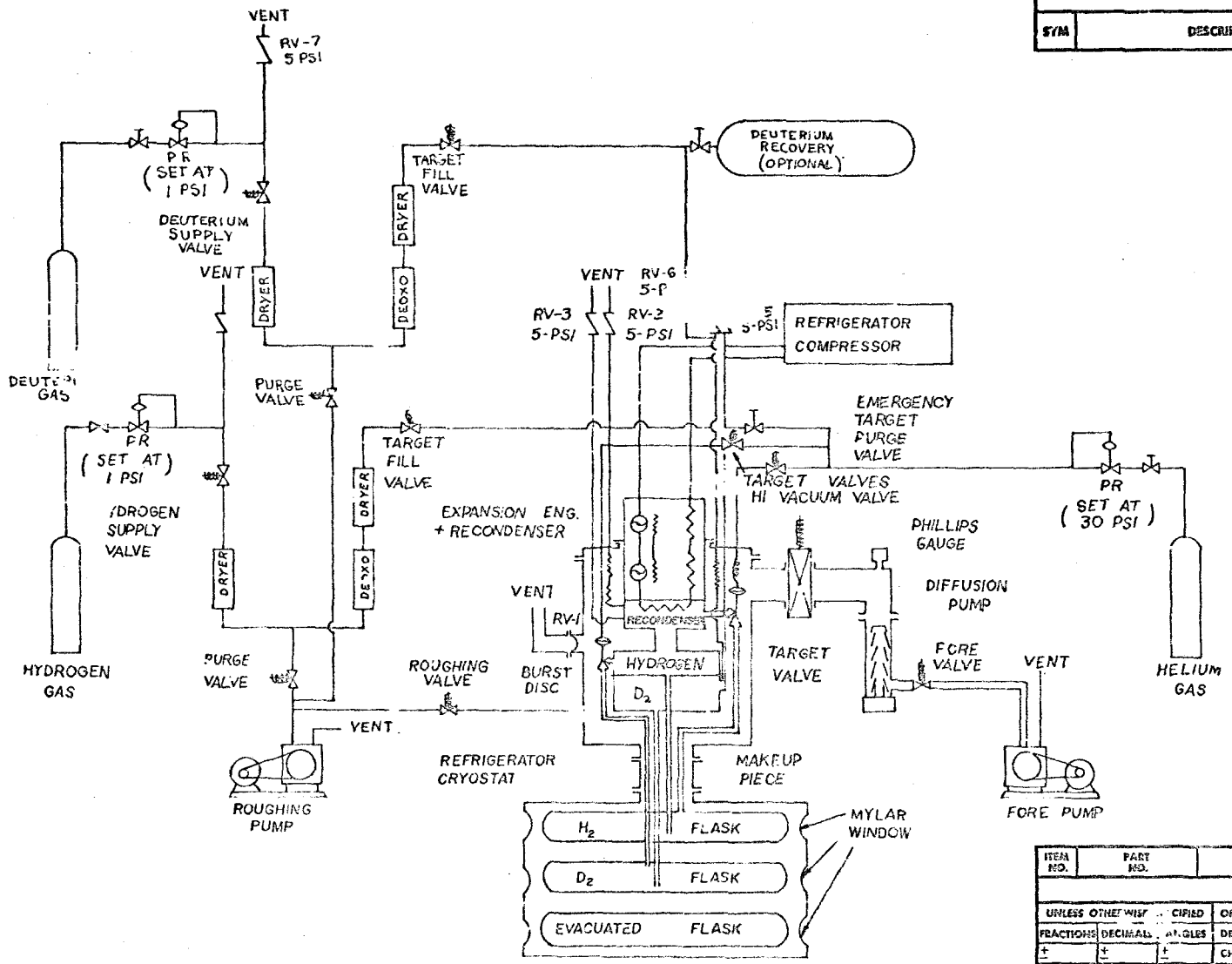

REVISIONS			
S/M	DESCRIPTION	DRAWN / APPD.	DATE / DATE

ITEM NO.	PART NO.	DESCRIPTION	QTY. REQ.

PARTS LIST

UNLESS OTHERWISE SPECIFIED	ORIGINATOR	M OTAVKA
FRACTIONS ± / DECIMALS ± / ANGLES ±	DRAWN	M OTAVKA
	CHECKED	
1. BREAK ALL SHARP EDGES 1/64 MAX.	APPROVED	
2. DO NOT SCALE DWG.	APPROVED	
3. DIMENSIONING IN ACCORD WITH USAS Y14.5 STD'S.	USED ON	
125 MAX. ALL MACHINED SURFACES	MATERIAL-	

NATIONAL ACCELERATOR LABORATORY
U.S. ATOMIC ENERGY COMMISSION

HYDROGEN DETERIUM TARGET
SCHEMATIC
10 WATT

SCALE	FILMED	DRAWING NUMBER	REV.
		2714.000-MC-45274	

Fig. 10

TM-423
2701

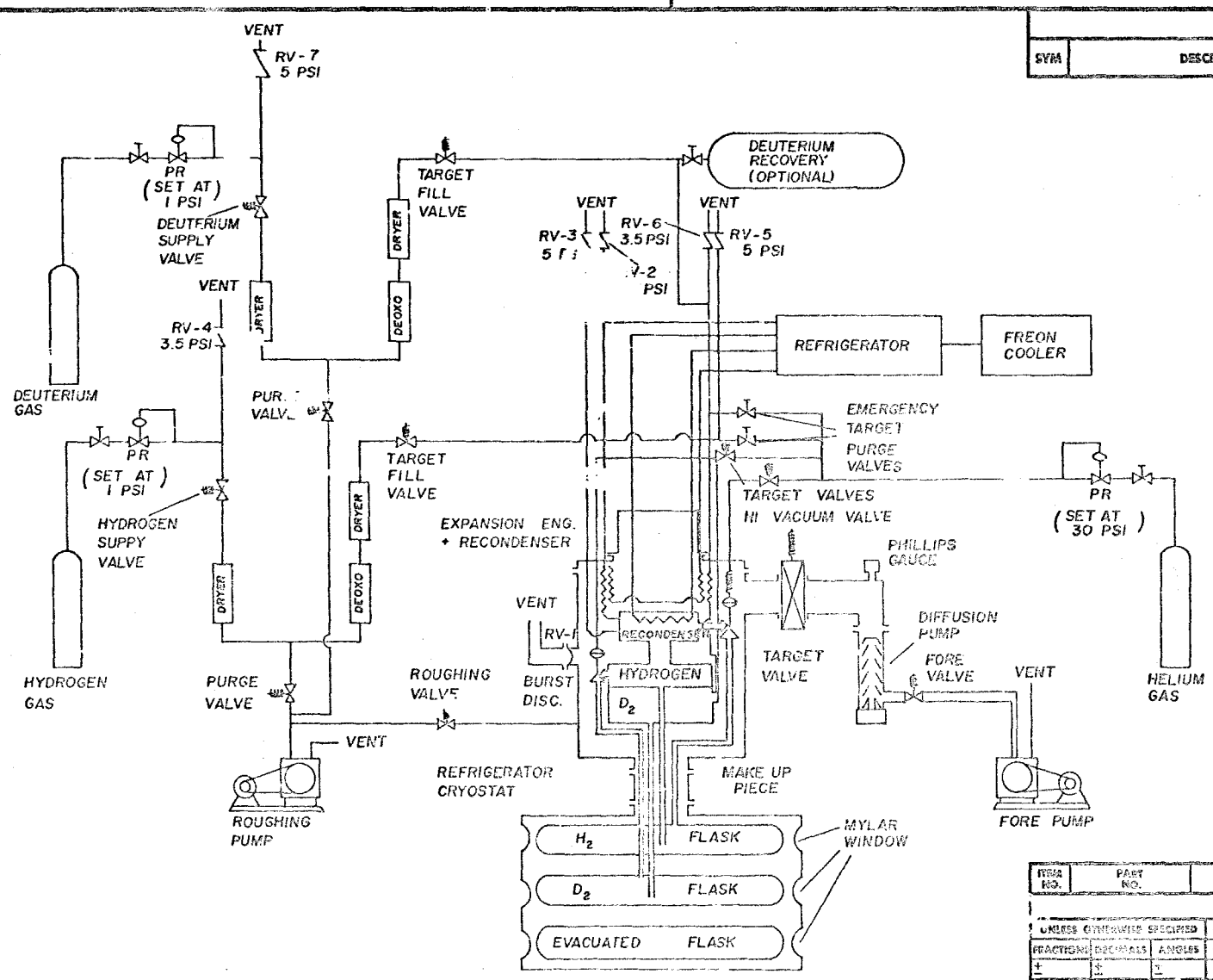

REVISIONS				
SYM	DESCRIPTION	DRAWN	DATE	
		APPD.	DATE	

ITEM NO.	PART NO.	DESCRIPTION	QTY. REQ.

PARTS LIST

UNLESS OTHERWISE SPECIFIED		ORIGINATOR	
FRACTIONS	DECIMALS	ANGLES	DRAWN	M. OTAVKA
±	±	±	CHECKED	M. OTAVKA
1. BREAK ALL SH. AT EDGES 1/64 MAX.			APPROVED	
2. DO NOT SCALE DWG.			APPROVED	
3. DIMENSIONING IN ACCORD WITH USAS Y14.5 STD'S.			USED ON	
7 MAX. AII MACHINED SURFACES			MATERIAL-	

NATIONAL ACCELERATOR LABORATORY
U.S. ATOMIC ENERGY COMMISSION

50-WATT HYDROGEN DEUTERIUM
TARGET SCHEMATIC

SCALE	FILMED	DRAWING NUMBER	REV.
		2714.000-MC-57107	

Fig. 11

TM-423
2701