national accelerator laboratory

TM-363
2751.300

SUPERCONDUCTING 3.5 TESLA, 3 METER PROTOTYPE BENDING MAGNET*

R. W. Fast and J. R. Heim

April 17, 1972

*Presented at the 1971 Particle Accelerator Conference, IEEE Trans Nucl Sci, NS-18, 656 (1971).

Operated by Universities Research Association Inc. Under Contract with the United States Atomic Energy Commission

SUPERCONDUCTING 3.5 TESLA, 3 METER PROTOTYPE BENDING MAGNET

R. W. Fast and J. R. Heim
National Accelerator Laboratory
Batavia, Illinois

A 3.5 tesla, 3 meter long superconducting dipole magnet has been designed, fabricated and tested as a full size prototype of a secondary particle bending element. The magnet has a 10 cm circular aperture at room temperature. The coil was designed to give a field uniform to within ±1.0% over the aperture. Room temperature iron surrounding the cryostat enhances the central field and reduces the fringe field.

Introduction

Particle accelerator laboratories are striving for higher energies. Superconducting accelerator magnets will probably be used to achieve the next step in energy. Secondary particle beam energies are also increasing. In cases where beam line lengths are restricted, superconducting bending and focusing elements at higher fields operating dc, may be required.

A 3.5 tesla, 3-meter long dipole at National Accelerator Laboratory serves as a prototype of a higher field bending magnet. The design philosophy was conservative; only proven techniques were used. A field of 3.5 tesla was chosen to avoid the structural material problems associated with higher fields. Over-all coil current densities are relatively modest to provide good cooling to the conductor operating at about one-half its short sample capability. In addition to illuminating the technical problems it is hoped that building the prototype will serve as a starting point for further cost estimation of production models. The magnet coil was designed and built by Airco Temescal, Berkeley, California under NAL contract. The cryostat was designed and built by Cryogenic Engineering Company, Denver, Colorado, who also assembled the coil into the cryostat.

Magnet Design and Construction

The magnet design parameters are shown in Table I. A harmonic synthesis computer program was used to aid the two-dimensional coil design. The coil was layer wound with "barber pole" banding between layers to radially prestress the conductors. The coil profile is shown in Fig. 1. The two dimensional magnetic field uniformity requirement for this magnet was $\Delta B/B_o \leq \pm 1.0\%$ throughout the 10 cm diameter aperture. The computed field uniformity at a radius of 5 cm is shown in Fig. 2 and several uniformity contours are shown in Fig. 3. An iron shield outside the cryostat was used to enhance the central field and reduce the fringe field. At this location, the iron contribution to the central field is only 10%; calculations using the computer code TRIM showed the field uniformity to be independent of iron shape. A square shield with horizontal legs 5 cm thick and vertical legs 10 cm thick was chosen.

Table I

Magnet Design Parameters

Type: cos θ approximation on circular tube, iron shield at room temperature. Midplane field vertical.

Clear Aperture: 10cm diameter x 3.048m long.

Midplane Field: 3.5T with iron shield.

Conductor: Airco, 1.9mm square, 121 strand, twisted, 1 per cm. Formvar insulated, I_{SS}(3.5T) = 1600A.

Design Current (3.5T): 700A.

Design Excitation (3.5T): 896,000 Amp-turns.

Conductor Current Density (700A): 19.3kA/cm^2.

Coil Packing Factor: 55%.

Coil Inductance (3.5T): 1.23 H.

Stored Energy (3.5T): 300kJ.

The load reacting structure was designed for the force field arising from a central magnetic field of 4T. The coil form was a 15 cm outer diameter stainless steel pipe with 1.27 cm wall thickness. The banding was applied after each completed layer. The banding material was 0.75 mm diameter, Formvar insulated beryllium copper wire. It was spiral wound at 10 turns per cm with a winding tension of 20 kg.

The coil was wound by half-layers, which resulted in 27 splices, 14 of which were wound into the coil. The remaining splices were made outside the coil at one end. Each completed layer was insulated with 0.25 mm perforated Mylar, banded and reinsulated. Short sample tests were made at NAL on conductor samples taken after each half layer. The short sample current at 3.5T was between 1400 and 1800A for all samples. The coil inductance and resistance to ground were monitored during the winding. The final coil was free of inter-layer and coil to banding shorts and there were no shorts from coil to ground. The banding layers were also insulated electrically from the grounded coil form. Figures 4,5,6 and 7 show the coil winding, inter-layer insulation and Be-Cu banding. The winding time required for the coil was approximately four months.

Quench protection of the magnet is a combination of active and passive methods. Figure 8 shows the excitation and quench circuit. Auxiliary current taps divide the coil into sections of approximately equal inductance. A 0.1Ω resistor shunts each section. The shunt resistor is made of stainless steel tubing and is water cooled. A quench detection circuit, based on unbalanced voltages, is built into the power supply and opens the series breaker. The unbalance voltage level and time delay are set on the power supply front panel. The breaker can be manually opened to allow a magnet discharge while superconducting. Voltage taps are provided across each layer of the coil to monitor quench propagation. Taps on each of the banding layers allow resistance to ground to be monitored as stress levels are increased.

The current lead assembly is shown in Fig. 9. The two main power leads and three quench leads are contained in a single epoxy fiberglass tube. They are gas cooled with balanced flow achieved by construction. The main excitation leads were sized for stable operation at 750A using all the cryostat boil-off gas. The quench leads were sized for 200A.

The power supply for this magnet was purchased from Oxford Instrument Company and is a copy of the power supply built for the CERN superconducting quadrupole. It is basically a 12 phase SCR system with constant current and constant voltage control modes and automatic crossover. The maximum dc output is 1000A at 8V. The quench detection circuit was described earlier; the series breaker is located in the power supply cabinet.

Cryostat Design and Construction

The magnet cryostat provides horizontal operation of the magnet. Table II gives the design parameters. The liquid helium volume is insulated from ambient temperature by high vacuum and multi-layer insulation and is shielded by a liquid nitrogen cooled surface. The 10 cm "beam pipe" is insulated from the liquid helium chamber by 0.5 cm of vacuum and 4 layers of aluminized Mylar. The magnet dead weight and possible electromagnetic forces arising from asymetric iron location are reacted to the outer cryostat ends by a horizontal epoxy fiberglass cylinder. The helium chamber and outer vessel are fabricated of stainless steel. The radiation shield is made of 1100 series aluminum and is trace cooled; there is no liquid nitrogen reservoir. Multi-layer insulation was wrapped on both the helium vessel and LN shield. The cryostat has a single vertical chimney located near one end. Copper constantan thermocouples were placed on the magnet coil, radiation shield and in the beam pipe to assist in the cool down and help analyze heat leak data. The cryostat was essentially built around the magnet coil. The coil was not tested in liquid helium prior to its assembly into the cryostat. Figures 10 and 11 show the finished magnet and cryostat in the laboratory.

Table II.

Cryostat Design Parameters

Bore Size:	9.5 cm inner diameter
Over-all Size:	0.6 m diameter x 4.2 m long
Total He Volume:	∿500ℓ
He Volume Above Coil:	∿200ℓ
Refrigerated Weight:	800 kg
Anticipated Heat Leak:	∿2 W.

Operation and Testing

Operation of the 3.5T, 3 m dipole began in March, 1971, approximately thirteen months after the contract was signed. During the initial phase of the testing, purchased liquid helium was used. Extensive measurements will be made to determine the vertical field uniformity. Magnetic end effects will be comprehensively studied since in a dipole of this type they may be quite large. Heat loss and bore temperature data will also be recorded. The magnet and cryostat costs will be analyzed to help predict the cost of additional similar magnets.

Acknowledgments

Thanks are due Robert Meuser, LRL-Berkeley for his part in the coil design. James Dao and Terry Cole guided the magnet design and fabrication at Airco Temescal. Tom Mortensen was the manufacturing engineer at Cryenco.

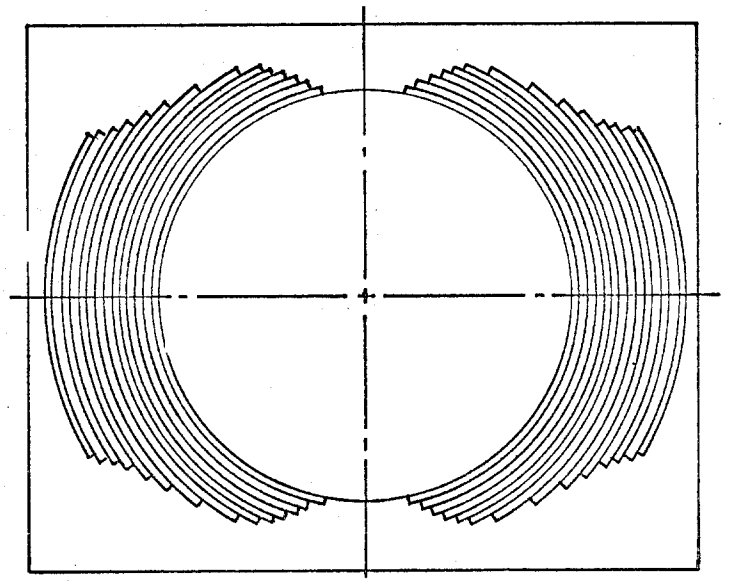

Fig. 1. 3.5T dipole coil profile.

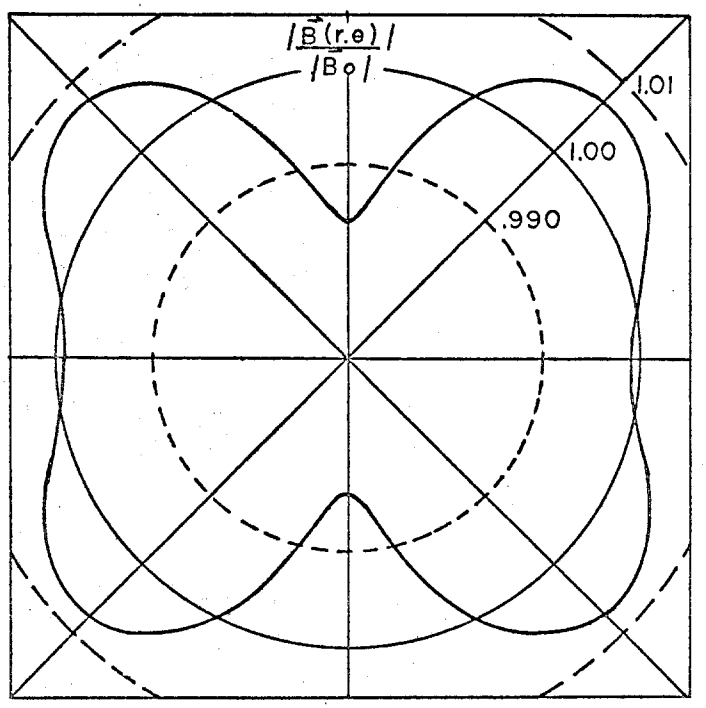

Fig. 2. Computed field uniformity at 5 cm radius.

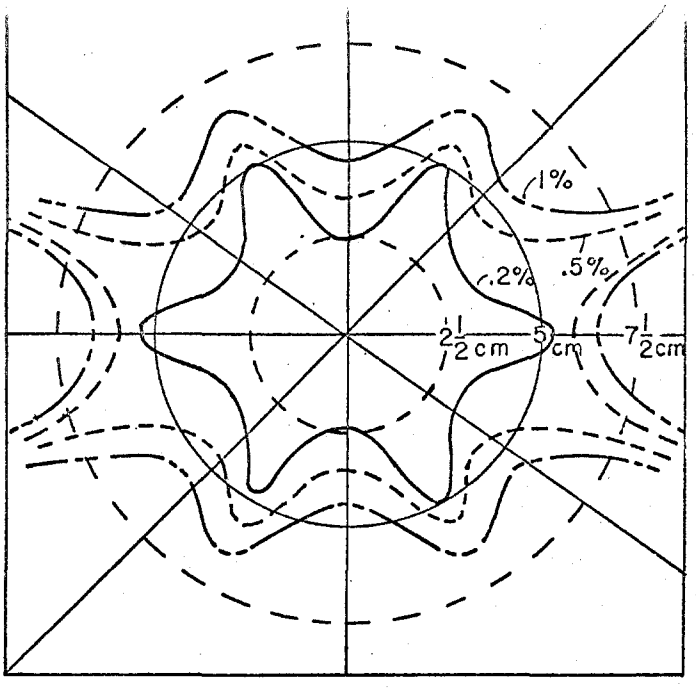

Fig. 3. Field uniformity contours.

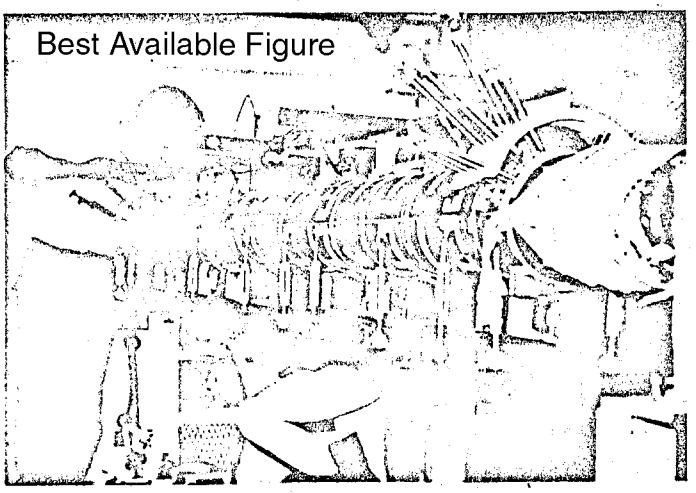

Fig. 4. Coil on winding fixture with all jigging.

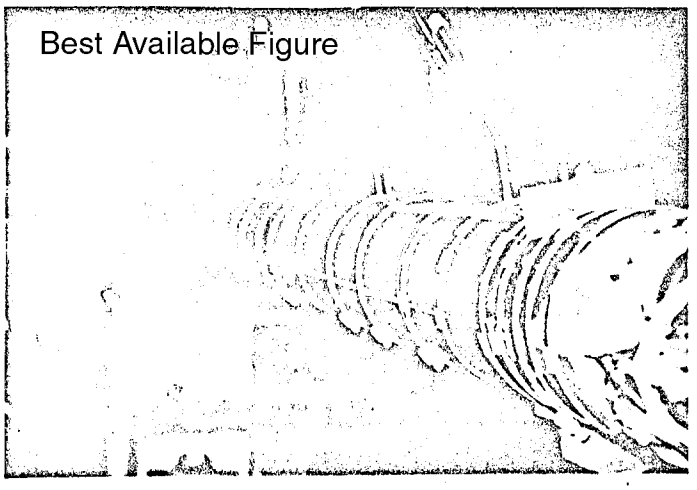

Fig. 5. Jigging removed prior to application of banding.

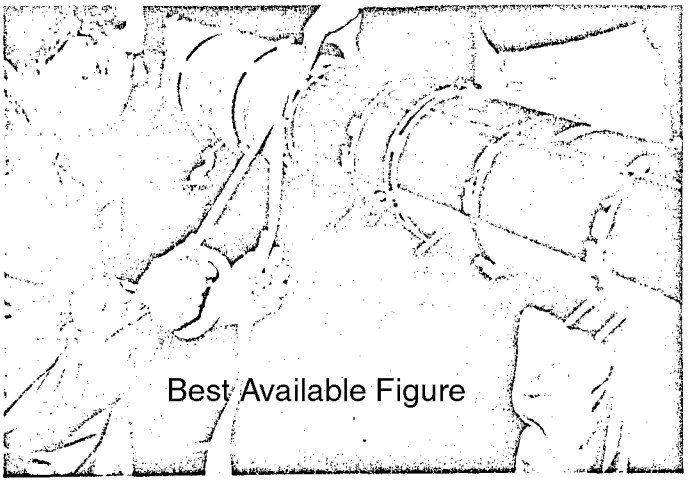

Fig. 6. Application of perforated insulation.

Fig. 7. Application of Be-Cu banding.

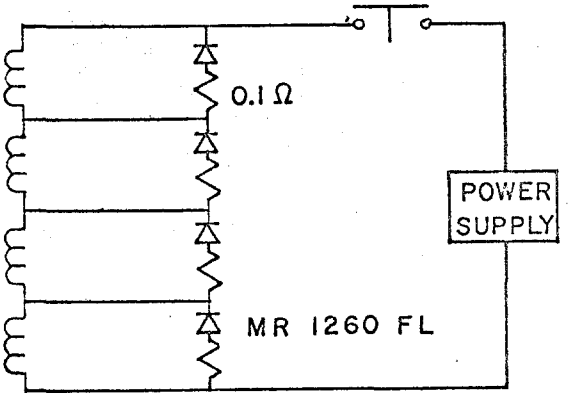

Fig. 8. Magnet excitation and quench circuit.

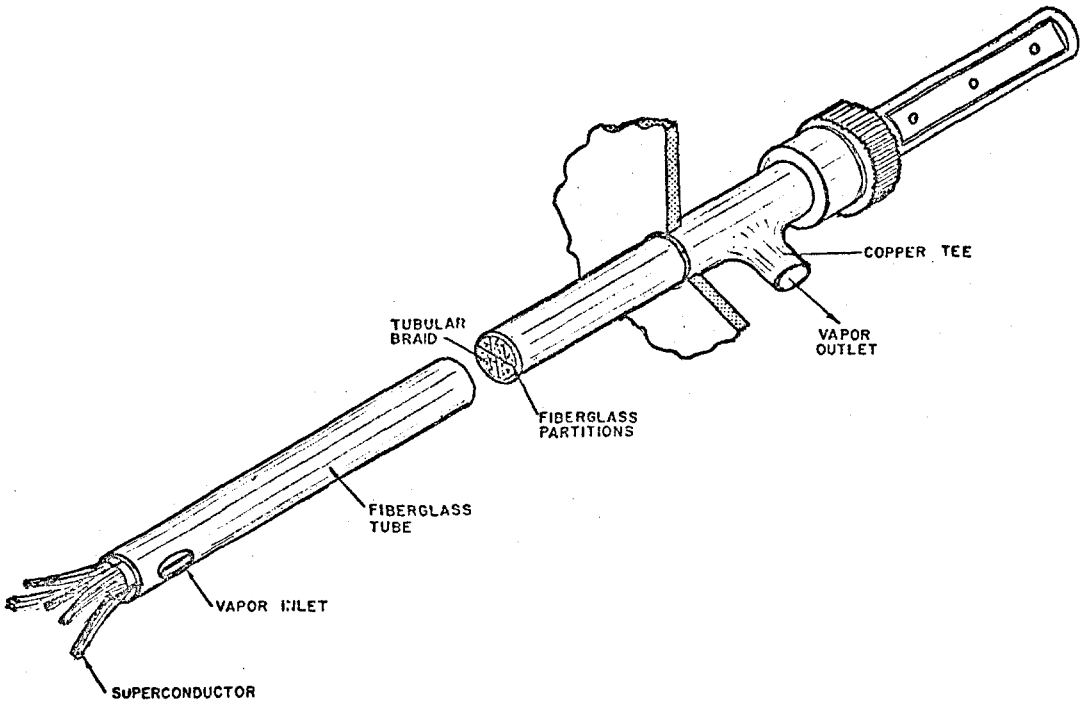

Fig. 9. Gas cooled current lead assembly.

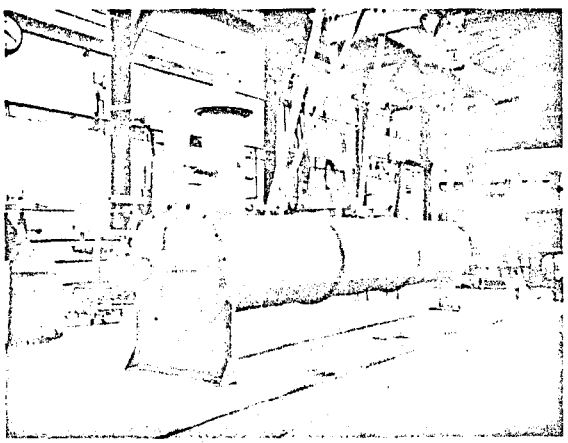

Fig. 10. Completed magnet and cryostat in laboratory.

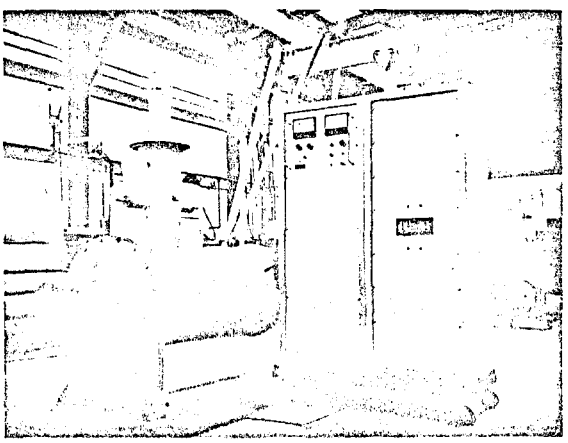

Fig. 11. Magnet cryostat and power supply.

Appendix - Operating Experience with Magnet

The initial cool down of the magnet began on April 22, 1971, when liquid nitrogen was started through the shield. The 20 liter/hr helium liquifier was started on April 26, with the remote delivery tube inserted into the magnet cryostat. Magnet and liquifier were initially at 300° K. The magnet was cooled to 4.2° K and the cryostat filled with liquid after 100 hours of operation.

Initial tests at low currents (75 to 100 A) indicated the magnet was operating satisfactorily, although the inductance was measured as 2.5 H, so the Oxford Instrument power supply was put into service. Because of the large stored energy and relatively poor helium penetration into the coil, the magnet was charged slowly, reaching 2T at 400 A in about six minutes.

At 400 A the thermal load to the 4.2° K system was about 6 liters/hr with the bore evacuated. All of the boil-off gas was used to cool the current leads. In order to take field measurements the bore was put under a positive pressure of helium gas, which caused a slow increase in the 4.2° K heat load. The bore was re-evacuated whenever possible to establish an equilibrium situation for the liquifier.

Extensive field measurement was done at 2T with a F. W. Bell gaussmeter. The data indicates that in a plane two coil diameters in from the end of the winding straight section the measured field is not well described by the two-dimensional computation. The vertical field component in this plane is nevertheless uniform to ± 0.5% over a 7.62 cm diameter region.

After running for many weeks at 2T the electrical circuit was modified from that of Fig. 8 to that shown in Fig. 12.

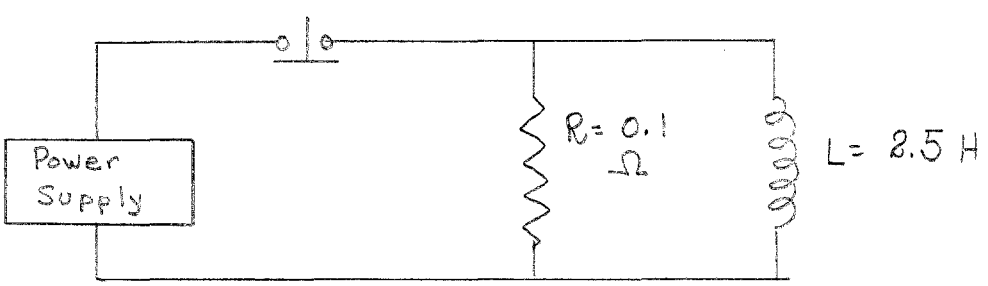

Fig. 12 Modified magnet excitation and quench circuit

The circuit was changed to reduce the valve of the dump resistor, which reduces the maximum coil discharge voltage. The center tap of the dump resistor was grounded to lower the discharge voltages to ground.

On the first attempt to reach higher fields the magnet quenched at 420 A, about 2.1 T. The coil discharged without incident although some helium gas was lost from the system as the helium vessel relief valves opened. The magnet was immediately recharged to 100 A and was found to have undergone no damage. After the liquifier refilled the cryostat an attempt was again made to reach higher currents, but the magnet quenched at 460 A, 2.3 T. The cause of the premature quench remains unexplained, although because of faulty liquid helium level gauging, inadequate liquid level is suspected. The magnet was subsequently operated at 2 T for several days to get more field uniformity data. The exact cause of the quench will be probed in the next few months.

This magnet has clearly demonstrated the perils and high cost of going to moderately high fields; at least in large bore designs. The total cost of the magnet and cryostat was approximately $150,000, exclusive of NAL in-house costs. Equivalent bending can be provided by a longer length of 2 T field, where iron may be used efficiently, at a fraction of the cost of a 3.5 to 4 T system.