national accelerator laboratory

TM-351
2526.00

A HIGH-RESOLUTION DISC CERENKOV COUNTER FOR NAL

G. Cocconi, J. Litt and R. Meunier

August, 1971

Operated by Universities Research Association Inc. Under Contract with the United States Atomic Energy Commission

A HIGH-RESOLUTION DISC ČERENKOV COUNTER FOR NAL

CERN is building a DISC Čerenkov Counter which is to be used for particle identification in the single-arm spectrometer facility at NAL. This instrument is designed to operate up to momentum values near 400 GeV/c and down to γ values of about 30. This report briefly describes the details of the counter design.

CONTENTS :

I Introduction

II A brief description of the DISC Counter

III Some of the design parameters

IV The control scheme

V Tentative schedule (August 1971)

Figures

August 1971

G. Cocconi, J. Litt and R. Meunier

I. INTRODUCTION

The technique of using Čerenkov counters to identify high-energy particles is extremely useful in the energy range above 100 GeV/c. In order to achieve a clean separation between pions and kaons at 200 (or 400) GeV/c requires a resolution ($\Delta\beta/\beta$) better than about 9×10^{-7} (or 2×10^{-7}). This resolution can be obtained by using a chromatically corrected differential Čerenkov counter [1] (DISC).

This report describes a DISC counter which has a design momentum resolution of about 4×10^{-7} which is capable of separating pions from kaons at momenta up to about 300 GeV/c, or pions from protons up to about 500 GeV/c. The counter will operate down to γ values of about 30.

The counter is being built at CERN and will be available at NAL in mid-1972 for use in the 2.5 mr beamline of the single-arm spectrometer facility (experiment 96)

(1) See for example : R. Meunier " DISC Counters", NAL 1970 Summer Study Report SS-170, p.85

II A BRIEF DESCRIPTION OF THE DISC COUNTER

A preliminary[2] drawing of the DISC counter is shown in fig. 1. The counter is 5.50 m. long (excluding trigger counters) and is filled with helium gas at pressures up to 30 atmospheres. The specifications for the inside optics are shown in fig. 2. A Čerenkov angle of 24.5 mr is used.

The Čerenkov light produced by the passage of a high-energy particle is reflected from a front-surfaced (almost) spherical mirror of radius of curvature 9.002 m and passes through a single lens (which corrects for coma aberrations) and a variable-position triplet lens (which corrects for chromatic aberrations). The light, moving parallel to the primary particle beam, passes through a variable-aperture diaphragm and is detected by eight photomultipliers equispaced around the opening of the diaphragm. The photomultipliers are located outside the pressure vessel.

The incident particle beam enters the counter through a 1.0 mm thick mylar window, passes through 5.5 m helium gas, through 6 mm thickness of the (glass) spherical mirror and exits via a second mylar window. If trigger counters are used before and after the counter, an extra 1 or 2 cm of scintillator will be placed in the path of the beam.

---

(2) During the construction of the counter, which is now in progress, it may become necessary to alter some features of the mechanical design.

To resolve $\Delta\beta/\beta \sim 4 \times 10^{-7}$ it is necessary to measure the refractive index (n) of the helium gas to an accuracy of better than 10^{-7}. A laser beam refractometer is mounted directly onto the counter vessel for this purpose and will provide a digital readout of the refractive index in units of 3×10^{-8}.

A thermally insulating box surrounds the vessel to minimise short-term temperature fluctuations. There will be no temperature control of the counter as all heat sources have been removed from the vessel; for example the phototube resistor chains are located outside the insulating box about 1 m away from the base capacitors. Also the laser source and four low-power stepping motors (for the internal movements) are mounted outside the vessel. The design of the internal optics provides compensation for temperature fluctuation (ΔT) of a few degrees centigrade by using bimaterial rods in the diaphragm and mirror supports such than $\Delta\beta/\Delta T = 0$.

The alignment of the counter need only be made to an accuracy of about ± 1 mm with respect to the beamline. This will align the counter with the beamline to within 0.5 mr The counter is only sensitive to <u>angular</u> positioning, and is insensitive to lateral displacements of a few centimetres within the 10 cm (maximum diameter) aperture. The optical axis inside the vessel is remotely adjusted by moving the mirror horizontally or vertically (± 1.0 cm, maximum), pivotting about a ball-joint located near the diaphragm. This is equivalent to an angular adjustment of ± 1.0 mr. To take advantage of the full efficiency of the DISC counter at the highest energies and for the most difficult separation (π-K) a NAL beam which is parallel to ± 0.1 mr would be required. However much wider angular spreads of the beam can be used and the high resolution maintained, at the cost of lowering the overall efficiency of detection by the counter.

III SOME OF THE DESIGN PARAMETERS

Light Yield

The average total yield of photoelectrons ($\bar{N}$) from the DISC counter produced by the passage of a high-energy charged particle is given by the usual approximation :

$$\bar{N} = \varepsilon AL\theta^2 \qquad (1)$$

where ε is an efficiency factor to allow for light losses in the optics, L is the length of the radiator (cm) and θ is the Čerenkov angle. The quantity A depends upon the performance of the specially selected phototube :

A ≈ 100 for a Philips type 56 DUVP tube and
A ≈ 150 for an RCA type 31000 M [3].

For this DISC counter with about 5 metres of radiator, θ = 24.5 mr and assuming ε = 0.8, the average total yield of photoelectrons is expected to be about 24 with the Philips phototube. and about 36 with the RCA tube.

The selection of events is made by requiring that the Čerenkov light is present in eight sectors of the annular diaphragm. Hence, assuming that the electronics is capable of detecting single photoelectrons, the electronic efficiency (ε_8) for detecting the eight-fold coincidence is :

$$\varepsilon_8 = (1 - e^{-\bar{N}/8})^8 \qquad (2)$$

In addition, the outputs from pairs of phototubes will be 'ORed and a four-fold coincidence demanded. This will provide a useful check on the efficiency of the counter, as the four-fold coincidence-efficiency (ε_4) should be :

$$\varepsilon_4 = (1 - e^{-\bar{N}/4})^4 \qquad (3)$$

(3) See the Argonne National Laboratory preprint of D.D. Yvanovitch et al

In table I are shown values of $\mathcal{E}_4$ and $\mathcal{E}_8$ calculated for different values of $\overline{N}$

TABLE I

Total number of photoelectrons, $\overline{N}$	Efficiency $\mathcal{E}_4$	Efficiency $\mathcal{E}_8$
10	0.710	0.067
20	0.973	0.504
25	0.992	0.699
30	0.998	0.810
40	0.998	0.947

The counter will be initially equipped with Philips photomultipliers, thus the expected detection efficiency ($\mathcal{E}_8$) will be about 0.66. If RCA tubes are used sometime in the future, the efficiency will increase to about 0.92. Due to the good velocity resolution of the DISC counter, the rejection of pions in a beam of kaons and pions will be better than about 10^{-5}

Velocity Resolution

The velocity difference ($\Delta\beta$) between two charged particles of mass M_1 and M_2 at a beam momentum p is given by :

$$\frac{\Delta\beta}{\beta} = tg\,\theta\ \Delta\theta = \frac{1}{2p^2}\ (M_1^2 - M_2^2) \qquad (4)$$

where $\Delta\theta$ is the range of Čerenkov angle accepted by the DISC counter. To have a useful separation between these particles, it is desirable that the resolution of the counter be at least three times smaller than the kinematic separation. Thus, one aims at :

$$\left(\frac{\Delta\beta}{\beta}\right)_{DISC} = tg\,\theta\,\Delta\theta_{tot} = \frac{1}{6p^2}\,(M_1^{\,2} - M_2^{\,2}) \,. \quad (5)$$

where $\Delta\theta_{tot}$ is the total spread of the Čerenkov angle, which is broadened by many contributions (see below). Table 2 contains the values of $(\Delta\beta/\beta)_{DISC}$ and $\Delta\theta_{tot}$ calculated using eq. (5) for different values of p and for the particle separations π -K, K-p and π-p.

TABLE 2

Beam momentum p GeV/c	π - K		K - p		π - p	
	$\frac{\Delta\beta}{\beta}$	$\Delta\theta_{tot}$ mr	$\frac{\Delta\beta}{\beta}$	$\Delta\theta_{tot}$ mr	$\frac{\Delta\beta}{\beta}$	$\Delta\theta_{tot}$ mr
50	1.50×10^{-5}	0.611	4.24×10^{-5}	1.73	5.74×10^{-5}	2.34
100	3.74×10^{-6}	0.153	1.06×10^{-5}	0.433	1.44×10^{-5}	0.586
150	1.66×10^{-6}	0.068	4.72×10^{-6}	0.192	6.38×10^{-6}	0.260
200	9.35×10^{-7}	0.038	2.65×10^{-6}	0.108	3.59×10^{-6}	0.146
250	5.98×10^{-7}	0.024	1.70×10^{-6}	0.069	2.30×10^{-6}	0.094
300	4.16×10^{-7}	0.017	1.18×10^{-6}	0.048	1.59×10^{-6}	0.065
400	2.34×10^{-7}	0.009	6.63×10^{-7}	0.027	8.97×10^{-7}	0.037
500	1.50×10^{-7}	0.006	4.24×10^{-7}	0.017	5.74×10^{-7}	0.023

The design value for $(\Delta\beta/\beta)$ MINIMUM for this DISC counter is expected to be about 4×10^{-7}. The resolution will allow a separation of π - K up to about 300 GeV/c and of π - p and K - p up to about 500 GeV/c. In practice, it is only rarely that any particular experiment will require to use the ultimate in the momentum resolution.

Chromatic Aberration

There is a dispersion of the Čerenkov angle (θ) versus wavelength (λ) of the Čerenkov light caused by the variation of the

refractive index (n) with λ. This chromatic error is given by :

$$\Delta\theta_{chr} = \frac{\theta}{2\nu} \left(1 + \frac{1}{\gamma^2\theta^2} \right) \qquad (7)$$

$$\text{where } \nu = \frac{n(\lambda_1) - n(\lambda_2)}{n(\lambda_3) - 1} \qquad (8)$$

The quantity ν has the same definition as the Abbe number used in the dispersion of glasses. In this case λ_1 and λ_2 are the wavelengths of achromatisation and are chosen at 2800 and 4400 Å. For helium gas at λ_3 = 3500 Å the quantity (n - 1) is approximately given by 0.35 x 10^{-4} x p (atmospheres), and ν is about 55. Thus the error $\Delta\theta_{chr}$ for $\beta \approx 1.00$ is about 0.22 mr, which is about ten times larger than the required $\Delta\theta_{tot}$ at 250 GeV/c. Thus, this chromatic error must be corrected in order to obtain a good velocity resolution, and the correction must vary with β (as in eq. (7)).

The chromatic corrector in this DISC counter is a triplet of null deviation in which there is a central NaCl lens enclosed by two S_iO_2 lenses (see fig. 2). All surfaces are spherical. To compensate for the variation of the chromatic aberration with β, the position of the corrector from the diaphragm (X cm) is varied such that the value of the Čerenkov angle for λ_3 = 3500 Å, the most efficient wavelength, remains a constant. In fact, for β = 1.000 the distance X is about 2.0 cm, and for β = 0.9992 the distance X is increased to about 17.7 cm.

Coma Error

As the mirror receives light rays which are parallel to a direction ± θ with the axis, it is not possible to shape the mirror to cancel the coma aberration for both signs of θ. For a spherical mirror the coma is proportional to θ^3, and

varies from being small at Čerenkov angles less than 20 mr, to being as large as the chromatic aberration at an angle near 100 mr (for β = 1.00). The coma is reduced to a small level in this counter by using a fixed position S_iO_2 lens (see the coma corrector in fig. 2) and by slightly distorting the spherical shape of the mirror (by less than one wavelength at the extreme edges of the mirror). The coma corrector also refracts the main ray parallel to the axis of the primary beam. Thus the intercept of the main ray with the chromatic corrector is always at the same height from the axis, regardless of the position of the chromatic corrector. As the optics is nearly diffraction limited for β = 1.000, the mirror figure has to be exact to $\lambda/8$.

Momentum Range of the Counter

The range of momentum for the operation of the DISC is determined by the amount of available chromatic correction. The present corrector is tuned for p = 300 GeV/c particles, thus from eq. (7), the ratio R of the maximum chromatic correction to the correction for β = 1.000 is given by

$$R = \frac{1}{\gamma_{min}^2 \theta^2} = \frac{X \ (\beta_{min})}{X \ (\beta = 1.000)} \qquad (9)$$

In this counter design γ_{min} is about 30.

The highest value of γ is determined when the limiting separation of any two particles approaches the minimum design resolution of the DISC counter, which is optimised to be about 4×10^{-7}.

Optimisation of the Design

The design of the counter was optimised using a computer program developed at CERN by M. Benot. The program checks the optics by ray-tracing (including off-axis rays) through the system and solves for the best overall velocity resolution at the diaphragm for a system achromatised for the wavelengths 2800

and 4800 Å . Although the first-order aberrations are removed in the design of the optics, there are some remaining secondary aberrations. These are computed by the program and are given in table 3. These remaining aberrations have been added linearly to obtain the design values for the velocity resolution of the counter for different values of β (table 3). Some of the design parameters will be checked in the initial tests at CERN and NAL.

TABLE 3 DISC Design Characteristics

β values	Corrector Position X cm	$\Delta\theta$ chromatic mr		$\Delta\theta$ coma mr	$\Delta\theta_{total}$ mr	$\frac{\Delta\beta}{\beta}$ DESIGN MINIMUM
		secondary spectrum	longitudinal contribution			
0.9992	17.74	4.76×10^{-5}	3.94×10^{-5}	3.11×10^{-6}	9.01×10^{-5}	2.21×10^{-6}
0.9994	13.79	3.83×10^{-5}	2.49×10^{-5}	3.09×10^{-6}	6.63×10^{-5}	1.62×10^{-6}
0.9996	9.84	2.92×10^{-5}	1.34×10^{-5}	3.12×10^{-6}	4.58×10^{-5}	1.12×10^{-6}
0.9998	5.90	2.02×10^{-5}	4.97×10^{-6}	3.09×10^{-6}	2.83×10^{-5}	6.93×10^{-7}
1.0000	1.95	1.14×10^{-5}	3.89×10^{-7}	3.09×10^{-6}	1.49×10^{-5}	3.65×10^{-7}

IV THE CONTROL SCHEME

The following remote controls and readouts will be provided with the DISC counter :

(1) Gas handling system together with the return of information from the laser refractometer.

(2) Angular positioning of the optical axis inside the vessel.

(3) Movement of the chromatic corrector along the optical axis.

(4) Movement of the aperture opening of the diaphragm.

(5) High voltage supplies and fast logic for the light DISC phototubes and four trigger counters (which can be located before and/or after the DISC counter).

(6) 2 support stands for the trigger counters which are moveable in horizontal and vertical directions, with position readout.

The controls will be at three locations:

(a) A local panel within a few metres of the counter;

(b) A remote panel about 50 m from the counter in a non-radiation area;

(c) An experimenter panel which can be located with any experiment which requires to control the DISC.

Where possible the controls and readout will be CAMAC compatible so that eventually they may be set and read from a computer. It is hoped that, in the near future, the running of the DISC counter can be completely automated.

Some details of the control equipment will now be discussed, although many items have still to be finalised.

The laser Refractometer

To measure a velocity peak as narrow as $\Delta \beta/\beta \sim 4 \times 10^{-7}$ it is necessary to determine the refractive index (n) of the helium gas to even better accuracy. The present laser refractometer

is designed to record Δn to an accuracy of 3×10^{-8}. The light from the laser source (Electro Optic Associates, type 2000) is split four ways in order to traverse different path-lengths of the interferometer. Each path-length (2m, 20cm, 2cm, 2mm) provides a readout for each decade in the fringe number. Each fringe pattern falls onto an electronic detection system consisting of photodiodes which are spaced at intervals of one-tenth of each (2π) fringe pattern. Using difference amplifiers in the logic, a digital readout of the fringe number in four decades is obtained. The least significant digit will correspond to $\Delta n = 3 \times 10^{-8}$. The most significant digit will be provided by a pressure transducer which is mounted on the counter vessel. The largest fringe number is expected to be about 50,000.

Fast Electronics for the Photomultipliers

The scheme for the logic of the fast electronics is shown in fig. 3. The final choice of components or modules will be decided following discussions between CERN and NAL.

Fig. 3 shows the 8 phototubes from the DISC counter and 4 possible trigger counters. The outputs from the 8-fold coincidence, two types of 4-fold coincidence, and a trigger counter coincidence can be used to set buffers for the event data, or can be used to gate a part of the electronic circuitry of the main experiment.

V TENTATIVE SCHEDULE (Aug. 1971)

The manufacture of the DISC counter is proceeding satisfactorily. It is intended to test the counter in a 15 GeV/c beam (containing pions and muons) at the CERN proton synchrotron beginning in February 1972. Thus, the counter is expected to be ready for transportation to NAL in the middle of 1972.

Most of the installation (cabling, gas-lines, power) at NAL can be done prior to the arrival of the DISC counter. Although the inside optics of the counter will be accurately aligned in a laboratory at CERN, it will be necessary to check them again at NAL. CERN staff will personally supervise the installation and performance tests at NAL prior to the use of the instrument in the single-arm spectrometer facility.

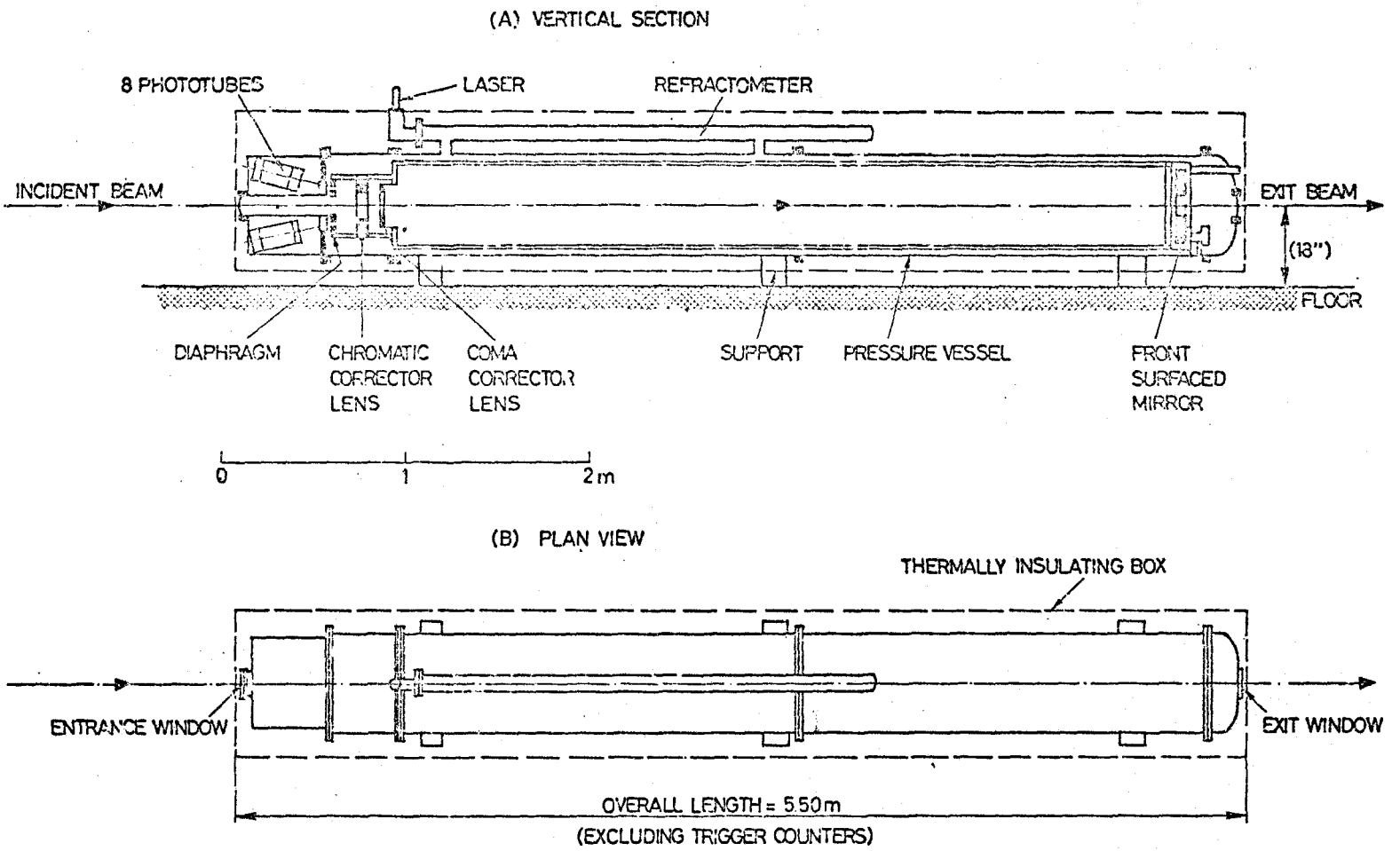

FIG. 1. PRELIMINARY DRAWING OF THE CERN DISC CERENKOV COUNTER (JULY 1971)

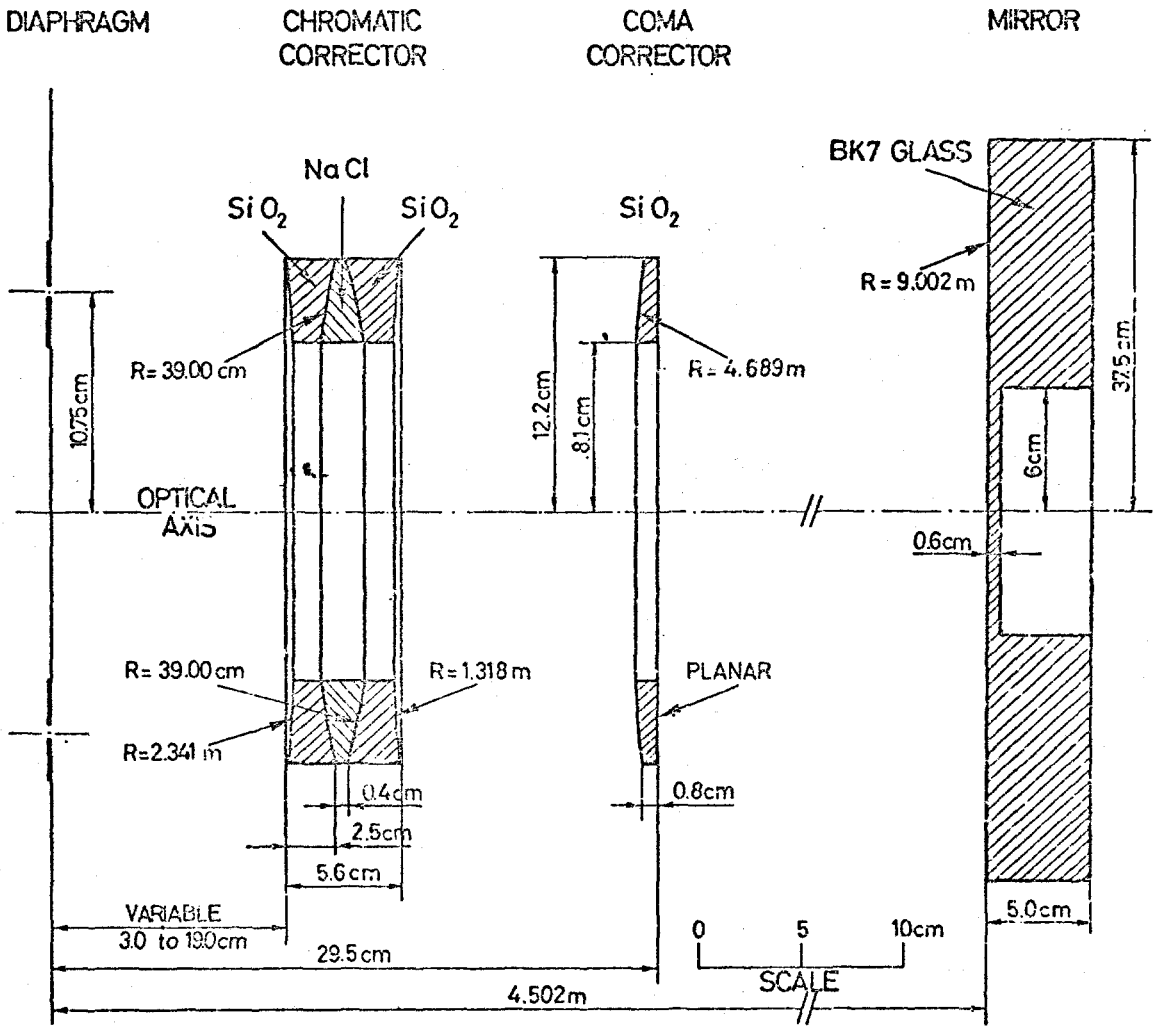

FIG. 2. SPECIFICATIONS OF THE OPTICS FOR THE CERN DISC CERENKOV COUNTER (JULY 1971)

NATIONAL ACCELERATOR LABORATORY

ENGINEERING NOTE

SECTION	PROJECT	SERIAL-CATEGORY	PAGE

SUBJECT: FIG. 3. A MINIMUM LOGIC FOR THE FAST ELECTRONICS FOR ONE DISC COUNTER

NAME: CERN DISC TEAM

DATE: AUG 1971
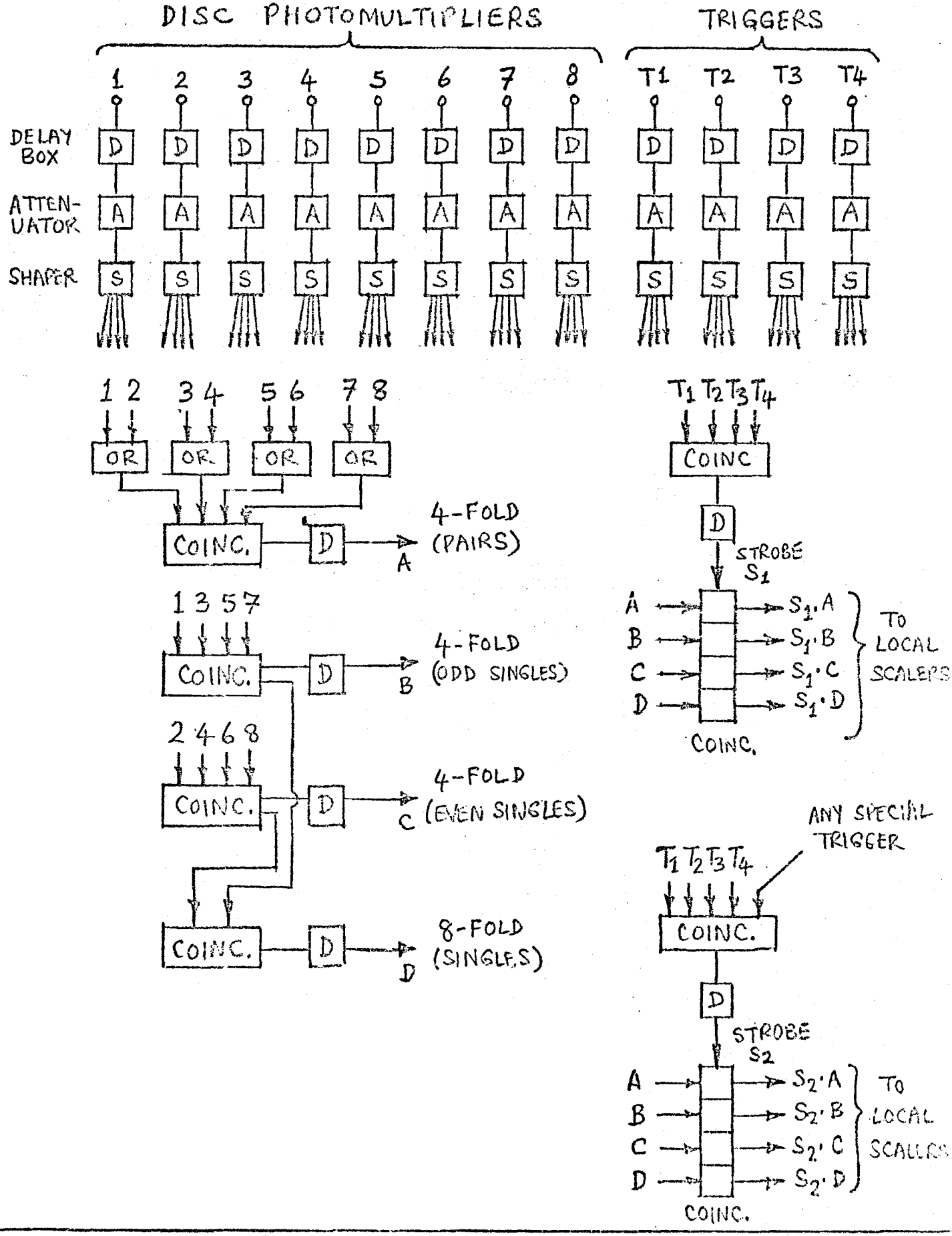
REVISION DATE: