national accelerator laboratory

TM-330
3008.131

Design of Magnetic Beam Dump for Hyperon Beams

R. March, University of Wisconsin
R. McCracken, National Accelerator Laboratory

November 23, 1971

Design Requirements

The "magnetic beam dump" for the two hyperon beams is a large magnet of picture-frame design, illustrated in Fig. 1. The proton beam strikes a production target mounted at the upstream end of the magnet. The magnet combines several functions:

1) Provides hadronic shielding sufficient to permit electronic detectors to operate in the region following the magnet, with 10^{10} protons at 200 GeV on the production target.
2) Sweeps out muons from decay of pions in the hadron cascade initiated by the protons, to reduce muon flux in detectors.
3) (neutral beam) Sweeps charged particles out of the beam.
4) (negative beam) Provides momentum definition for the beam.

Function (1) determines the length of the magnet along the beam, which must be around 5 to 6 meters. Functions (3), (3') require a narrow region ($\sim$ 10 cm.) along the beam line at the highest practicable field. Function (2) requires a wide region to either side of the beam line at a more modest field. A narrow, high-field magnet would quickly sweep low-energy muons, which are responsible for the bulk of the flux, into the return legs of the magnet. There the reversal of the magnetic field tends to direct them back toward the beam.

For a given total width of the magnet, there is an optimum width for

the central portion enclosed by the coils. If it is too narrow, low-energy muons reach the return legs too soon. If it is too wide, the return leg field becomes high. We find that the smallest magnet that will reduce muon flux through detectors to a level comparable to the hadron flux is one about 10 feet wide, with a coil 3 feet wide.

The gap is filled with magnetically inert shielding. Beam-defining collimators and pole pieces to provide the narrow high-field region required for functions (3), (3') are part of a separate assembly. Details of the design are discussed below.

Magnetic Fields

The central assembly containing the negative beam channel will have a gap of 1/2". In this gap the magnetic field is predicted to be 33 kilogauss. For the neutral beam, the central gap width will be 1 1/2", giving a field of 27 kilogauss. Those calculations assume the iron used has the magnetic properties of 1004 steel.

The field in the wide-gap regions, to either side of the central region but enclosed by the coils, should be about 15 kilogauss, with a 3 1/2" gap.

Return path average fields are about 13 kilogauss above the coils, 10 kilogauss at the median plane.

Basic Magnet Configuration

The magnet will be fabricated from slabs of low-carbon scrap steel, Each slab is about 8" thick, and there are 27 layers in all. The outside dimensions of the assembled magnet will be 72" x 116" x 216". The total weight of steel is about 250 tons.

The magnet splits at its median plane. The design of the slabs is slightly asymmetric from top to bottom, both to take advantage of available slabs and to minimize machining. The lower section will be 37 1/2" high, the upper 34 1/2". The coils and beam channel, however, wind up essentially centered in the magnet.

Fabrication and assembly procedure is as follows:

(1) The external dimensions of the slabs and the coil spaces are flame-cut.

(2) The slabs are welded together in groups of three, these sections bolted together to form the upper and lower halves, and the "mating surfaces" machined. For the upper slabs, this requires a single cut. For the lower, there are two cuts, one for the return path and the other for the lower pole, which is recessed 3 1/2" to provide the gap. In addition, at this point the coil spaces are machined and also a keyway for positioning the beam collimator assembly. The magnet will then be disassembled for shipment to NAL.

(3) The lower half is re-assembled and welded in place, on a support bed that includes 18 jacks to adjust for settling and maintain the straightness of beam channels.

(4) After laying in the magnetically inert shielding, lower coils, pole-piece and beam-channel assembly, the upper half is re-assembled on top of the lower.

(5) Flame-cut recesses are provided for nine permanently installed hydraulic jacks on each side, capable of lifting the upper half for adjustment or replacement of beam-defining elements.

The jacks in step (5) are designed to provide for modification in the beam channels, either due to difficulties with alignment or for future experiments with different beam requirements, without having to incur rigging costs for removing the top of the magnet. This provision also permits simplification of the design of beam channels, since they need not be modifiable while the magnet is fully assembled.

Coil Design

The coil, which will be fabricated at the University of Wisconsin Physical Science Laboratory, has the following characteristics:

Conductor: Aluminum .925" x 1.100" with .430" diameter water hole and 1/32" rounding on corners. Total length required 3600 ft. in eight sections of 450 ft. each. Total weight is 3,680 lb. This conductor was chosen because dies for it already exist.

Configuration: Eight double-layer pancakes of 10 turns each with electrical and water connections on the outside, potted together into two coils of eight layers each. Wrapped with .040" of Scotchply insulation, vacuum impregnated with epoxy resin. Inside dimensions of coil: 232" x 36" with 12" rounding on corners. Ends of coils to be bent out of plane approximately 3" to allow clearance for beam pipes.

Electrical properties: All pancakes electrically in series. Total resistance .055 Ω at 50° C. Power requirements 1500A at 90v, total power 135 kW, including connections.

Cooling: Pancake water paths in parallel. Each can draw as much as 6.2 gal/min at 180 psi head, for a temperature rise of 11° C.

Shielding in Median Plane

The cheapest suitable magnetically inert material is zinc. As this metal is relatively soft, compression from the weight of the upper section of the magnet should insure against neutron leaks.

Support and External Shielding

For biological shielding, the magnet must be covered by several feet of concrete above and on the sides. Care must be taken in the design of the support structure for the magnet to permit a relatively close fit of bottom shielding. The present plan calls for using shielding iron resting on the floor of the meson building.

It is important that access to the sides of the magnet in order to adjust alignment and replace collimators be possible without having to move a large amount of shielding. A 3' manway for this purpose does not appear to either compromise shielding quality or excessively increase the cost of shielding.

Beam Channels

A central assembly containing the narrow-gap pole pieces, beam channels, and associated shielding, must be machined with some precision. The dimensions of this assembly are about 9" x 3 1/2" x 216". For a variety of reasons it is more convenient, and possibly also less expensive, to provide separate assemblies for the charged and neutral beams. The time required to replace beam channels and align them should be short compared to other aspects of the change over from charged to neutral beam. Separate reports on channel design will be issued by the two groups involved when the designs are completed.

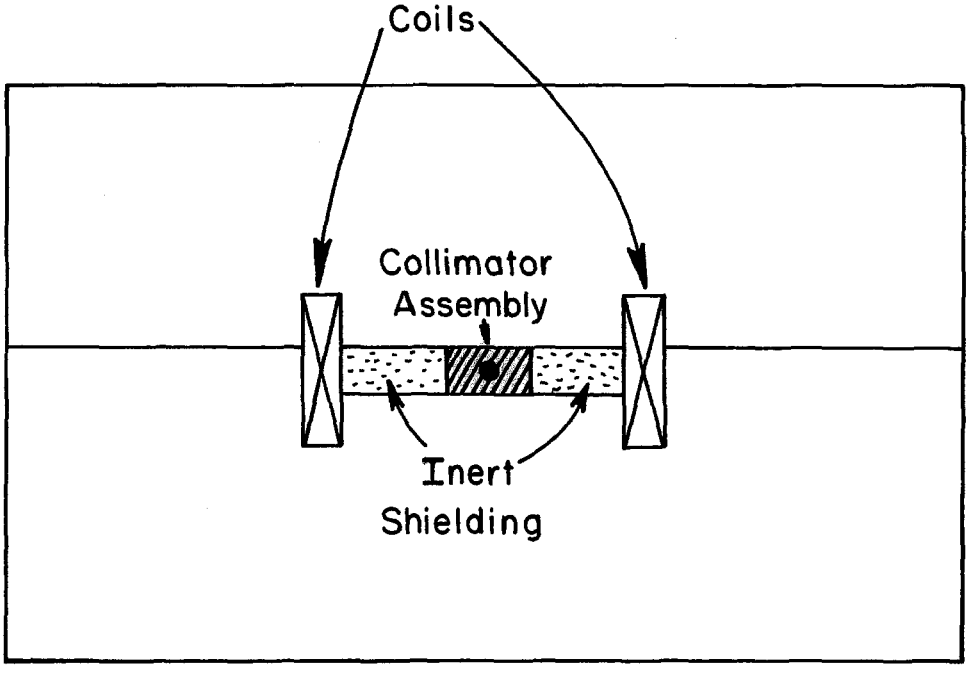

Fig. 1

Cross-section of magnet (not to scale). Beam normal to plane of drawing.